CONTENTS

PAGE	TITLE
1	COVER
2	CONTENTS
2	RECORD OF REVISIONS
3	GENERAL DESCRIPTION
3	FEATURES
5	FUNCTION LAYOUT
10	CONTROLLER DIMENSIONS
11	KEY BOARD & IR BOARD SYSTEM SCHEMATIC
11	OPERATION REQUIREMENT

RECORD OF REVISIONS

VERSION NO	DATE	PAGE	DESCRIPTION

1.GENERAL DESCRIPTION

MST6M181 V1.0 is a multi-purpose LCD controller, it is suitable Asia/Europe/America market.It is designed to support dual/single LVDS which more than 19 inch LCD panel.

MST6M181 V1.0 can support HDMI, VGA, AV,S-Video,YPBPR,USB,TV signal input.It can also support AV output.

2.FEATURES

Below you will find the detailed feature

Video input	TV	VEDIO SYSTEM	PAL、SECAM、NTSC（Option）
		SOUND SYSTEM	BG,DK,I,M
		RECEIVE CHANNEL	ATV:200
	CVBS	1.0Vp-p +/-5%	
	YPBPR/YCBCR	480i,480p,576i,576p,720p,1080i,1080p	
	PC-RGB	Format	Up to 1920*1080@60HZ
		Color	16bit,24bit,32bit
	HDMI	480i,480p,576i,576p,720p,1080i,1080p	
	SCART	Option	
Expansion function	Card reader/USB	YES	
	Inbuilt DVD	YES	
Audio input	S-Video/CVBS	Left and right audio input	
	PC-RGB & YUV	PC:Earphone input	
	AV Audio Input	YES	
Power	Build-in power supply	12V	
	To panel	3.3V,5V,12V	
	Manage	Low power consumable mode: standby≤0.5w	
OSD Language	Chinese,English,(French,Spanish,Polish,Portuguese,Russian,Italian,German,Dutch)(Option)		
Audio Output	2*5W@8 Ω		
Comb Filter	3D	De-interlace	3D
Weak signal enhancement		/	
Noise reduction		YES	
PIP		No	
EPG		NO	
NICAM/A2,TELETEXT		Optional	
Panel Resolutions		Support up to 10-bit dual LVDS FULL HD panel interface	
Terminals	Input	TV Input	1 IEC 75 Ω
		PC-RGB Input	1D-SUB 15 pin terminal blue color
		S-Video Input	1S-Video terminal black color

		CVBS	2RCA terminal yellow color
		YPBPR Input	3RCA terminal green color,blue color red color
		HDMI Input	1 HDMI terminal Input
		CVBS Audio Input	2*2RCA terminal white color,red color
		YPBPR Audio Input	Share with CVBS2
		PC-RGB Audio input	1 earphone terminal black color
	Output	To Panel	LVDS 34PIN/2.0 jack
		Earphone Out	1 earphone terminal black color

USB Function

Media	File Extension	
PICTURE	JPEG、BMP、PNG	.jpg、.bmp、.png
MOVIE	MPEG1、MPEG2、MPEG4、RM、RMVB、MOV、MJPEG、Divx、	.avi、.mpg、.dat 、.vob 、 .div、.mov、.mkv、.rm、 .rmvb、.mp4、.mjpeg、ts、.trp、.wmv、.asf
MUSIC	WMA 、MP3、M4A 、（AAC）	.wma、.mp3、.m4a
NOTE: Resolution of MOVIE can only support 1280*720 and less than 1280*720.		

File type \ The relevant parameters	Resolution	Compression option	Support boundaries
JPEG	15360*8640	Progressive JPEG	Resolution Only support 1024*768
		Baseline(“standard”)	support
		Baseline optimized	support
BMP	9600*6400	homochromatism	support
		16color	support
		256color	support
		16bit	support
		24bit	support
		32bit	support
PNG	9600*6400	No interlacing	support
		Interlaced	Resolution Only support 1200*800

***Realize the above-mentioned USB function must be going to gain the corresponding copyright first.**

3 .FUNCTION LAYOUT

PICTURE OF LCD CONTROLLER

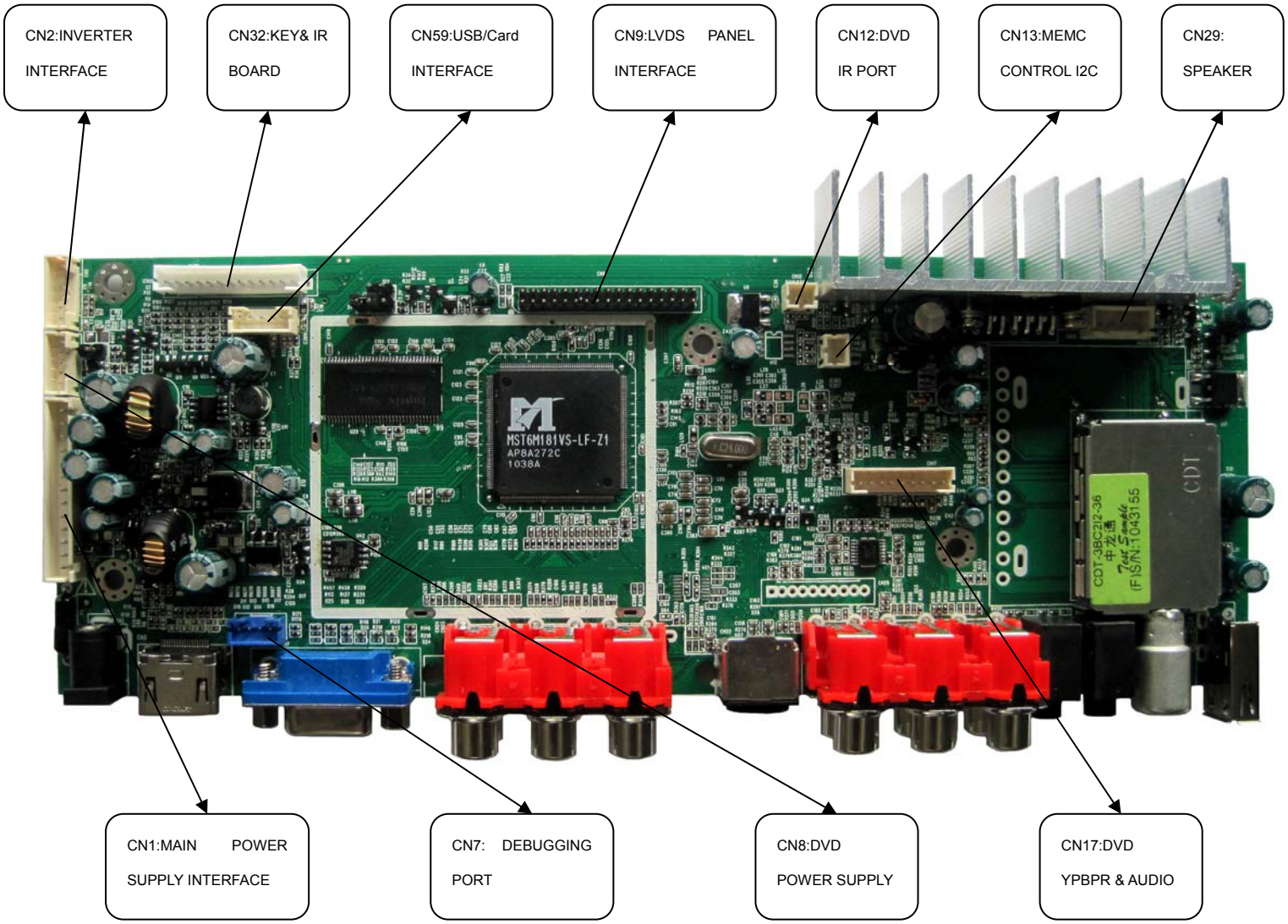

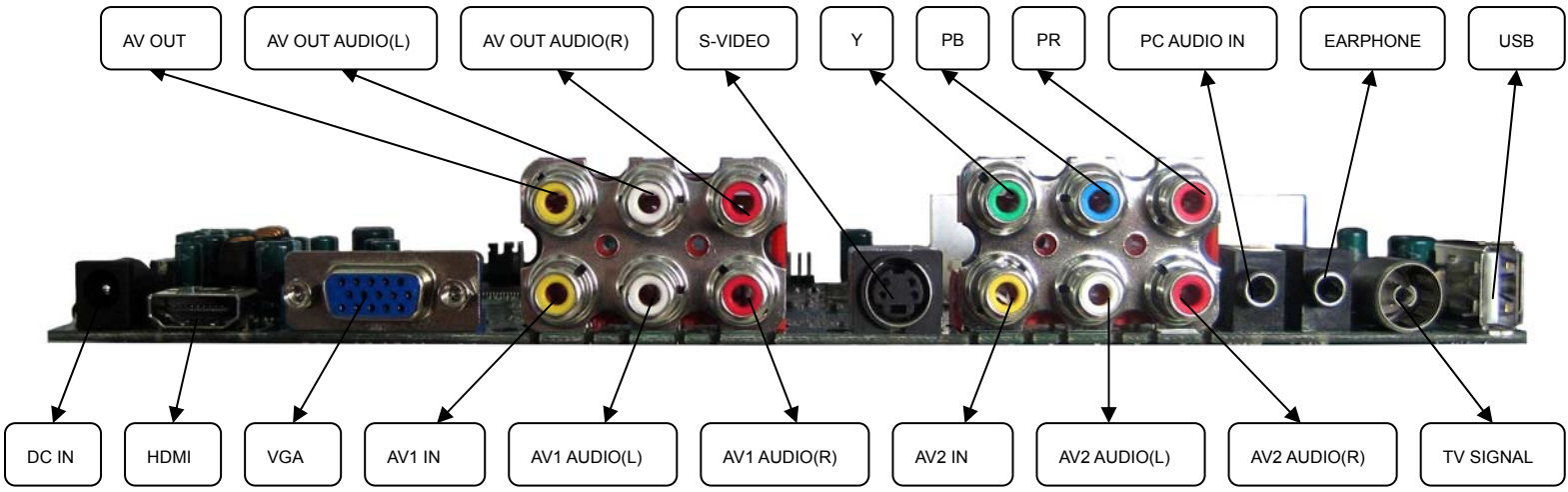

(The color of actual item may vary and the image is only for information)

INTERFACE DEFINITION

Below ,please see the symbol and description from left to right pin

CN1 (13PIN/2.54) MAIN POWER SUPPLY INTERFACE

NO.	SYMBOL	DESCRIPTION	ELECTRIC CHARACTER
1	12VA	+12V DC Power supply	1.5A+Panel Electric Current +electric Current of extended module
2	12VA		
3	GND	Ground	---
4	GND		
5	GND		
6	5VA	+5V DC Power supply	2A+Panel Electric Current + electric Current of extended module
7	5VA		
10	5VA		
11	5VA		
8	5VS	+5V DC Power standby	1A
9	STB	Standby Control	5V ， 1K ohm output impedance
12	GND	Ground	---
13	GND		

CN2 (6PIN/2.0) INVERTER INTERFACE

NO.	SYMBOL	DESCRIPTION	ELECTRIC CHARACTER
1	GND	Ground	---
2	GND		
3	ADJ	Brightness Adjustment	0-5V adjustable
4	BKLTON	Black-light ON/OFF control	5V ， 1K ohm output impedance
5	12VA	+12V DC Power supply	INVERTER Power Supply
6	12VA		

CN7 (4PIN/2.0) DEBUGGING PORT

NO.	SYMBOL	DESCRIPTION
1	GND	Ground
2	TX	Transmit data
3	RX	Receive data
4	5VS	+5V DC Power supply

CN8 (5PIN/2.0) DVD POWER SUPPLY

NO.	SYMBOL	DESCRIPTION
1	12VA	DVD +12V DC Power supply
2	GND	Ground
3	GND	
4	DVD5V	DVD +5V DC Power supply
5	DVD5V	

CN9 (2*17PIN/2.0) LVDS PANEL INTERFACE

NO.	SYMBOL	DESCRIPTION
1	VCC	Power for panel
2	CT	mode pin for panel
3	VCC	Power for panel
4	GND	Ground
5	GND	Ground
6	GND	Ground
7	RXO0-	LVDS ODD 0- Signal
8	RXO0+	LVDS ODD 0+ Signal
9	RXO1-	LVDS ODD 1- Signal
10	RXO1+	LVDS ODD 1+ Signal
11	RXO2-	LVDS ODD 2- Signal
12	RXO2+	LVDS ODD 2+ Signal
13	GND	Ground
14	GND	
15	RXOC-	LVDS ODD Clock- Signal
16	RXOC+	LVDS ODD Clock+ Signal
17	RXO3-	LVDS ODD 3- Signal
18	RXO3+	LVDS ODD 3+ Signal
19	RXE0-	LVDS EVEN 0- Signal
20	RXE0+	LVDS EVEN 0+ Signal
21	RXE1-	LVDS EVEN 1- Signal
22	RXE1+	LVDS EVEN 1+ Signal
23	RXE2-	LVDS EVEN 2- Signal
24	RXE2+	LVDS EVEN 2+ Signal
25	GND	Ground
26	GND	
27	RXEC-	LVDS EVEN Clock- Signal
28	RXEC+	LVDS EVEN Clock+ Signal
29	RXE3-	LVDS EVEN 3- Signal
30	RXE3+	LVDS EVEN 3+ Signal
31	RXE4-	LVDS EVEN 4- Signal
32	RXE4+	LVDS EVEN 4+ Signal
33	RXO4-	LVDS ODD 4- Signal
34	RXO4+	LVDS ODD 4+ Signal

CN12 (2PIN/2.0) DVD IR PORT

NO.	SYMBOL	DESCRIPTION
1	GND	Ground
2	DVD-IR	DVD IR

CN13 (2PIN/2.0) MEMC CONTROL I2C

NO.	SYMBOL	DESCRIPTION
1	SDA	I2C Master bus for SDA
2	SCL	I2C Master bus for SCL

CN17 (9PIN/2.0) DVD YPBPR & AUDIO

NO.	SYMBOL	DESCRIPTION
1	DVD_Y	DVD Y Signal
2	GND	Ground
3	DVD_PB	DVD PB Signal
4	GND	Ground
5	DVD_PR	DVD PR Signal
6	GND	Ground
7	DVD_R	DVD YPBPR Audio (right)
8	GND	Ground
9	DVD_L	DVD YPBPR Audio (left)

CN29 (4PIN/2.54)SPEAKER(2*5W)

NO.	SYMBOL	DESCRIPTION
1	R+	Positive Right audio channel out
2	R-	Negative Right audio channel out
3	L-	Negative Left audio channel out
4	L+	Positive Left audio channel out

CN32 (6PIN/2.0) KEY & IR BOARD

NO.	SYMBOL	DESCRIPTION
1	CH-	CH- key
2	CH+	CH+ key
3	MENU	MENU key
4	AUTO	Source key
5	L/VOL-	VOL- key
6	R/VOL+	VOL+ key
7	GND	Ground
8	LED-G	Green indicator
9	LED-R	Red indicator
10	ON/OFF	ON/OFF key
11	GND	Ground
12	IR-IN	Infrared receiver
13	IR-VCC	Power supply

CN59(5PIN/2.0) USB INTERFACE

NO.	SYMBOL	DESCRIPTION
1	GND	Ground
2	D1+	USB2 data1+ input

3	D1-	USB2 data1- input
4	5VA	+5V DC Power supply
5	CARDEN	Card_EN

4. CONTROLLER DIMENSIONS

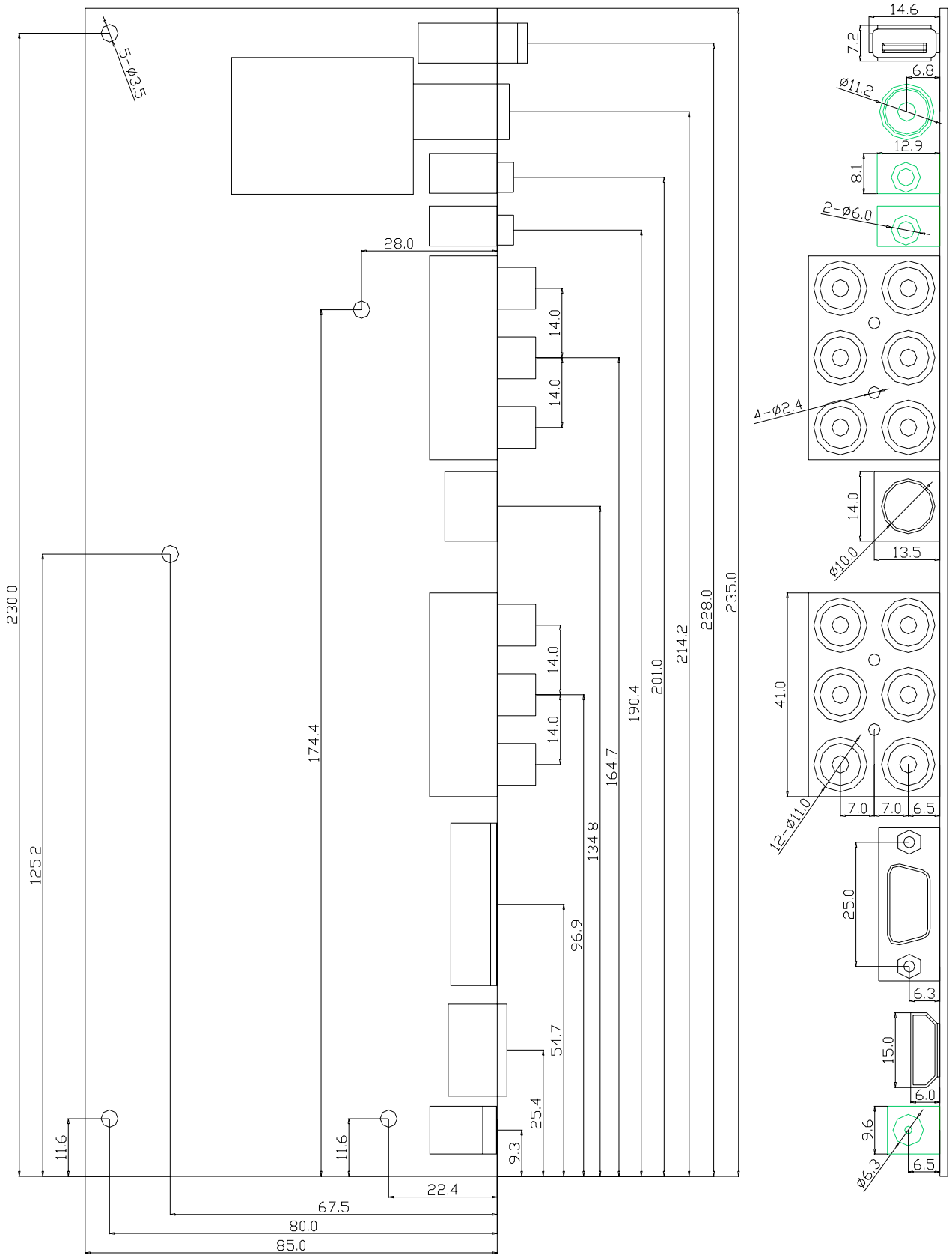

5.KEY BOARD & IR BOARD SYSTEM SCHEMATIC

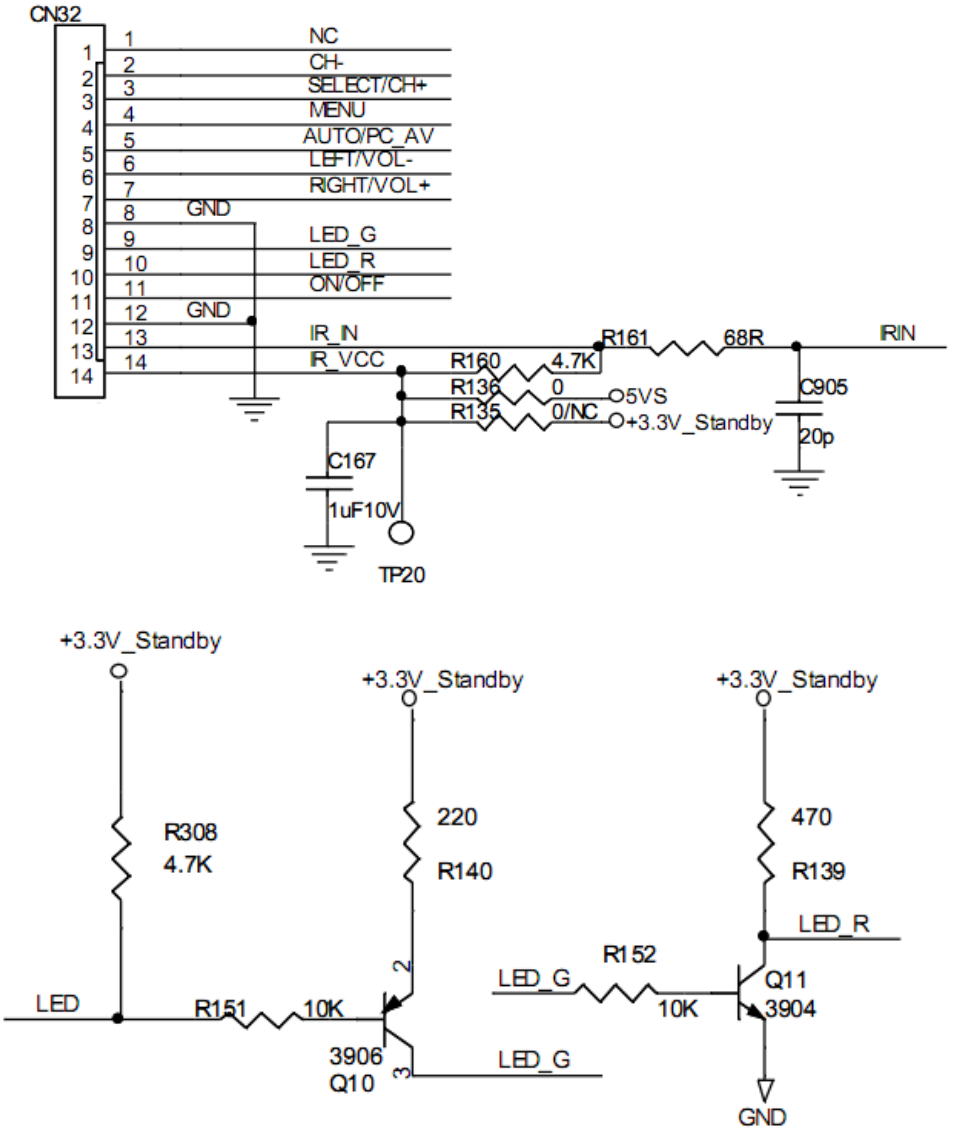

6.OPERATION REQUIREMENT

Do not pressed and distorted.
Keep away from static and water.
Relative humidity :≤80%
Storage temperature:-10~+60℃
Operation temperature:0~+40℃