Doc. version :	0.1a
Total pages :	28
Date :	2006.03.06

Product Specification

2.36″ COLOR TFT-LCD MODULE

MODEL NAME: A024CN02 V7

(Green Product, RoHS compliance)

< ◆ > Preliminary Specification

< > Final Specification

Note: The content of this specification is subject to change.

© 2005 AU Optronics
All Rights Reserved,
Do Not Copy.

Record of Revision

Version	Revise Date	Page	Content
0.0	Oct./31/2005		First draft
0.1	Nov./28/2005	6	Update LED voltage
0.1a	Mar/06/2006	9	Register setting

Contents:

A. Physical specification **P3**

B. Electrical specifications **P4**

C. Optical specifications **P14**

D. Reliability test items **P16**

E. Packing format/outline drawing **P17**

F. Timing format **P19**

ALL RIGHTS STRICTLY RESERVED. ANY PORTION OF THIS PRPER SHALL NOT BE REPRODUCED, COPIED, OR TRANSFORMED TO ANY OTHER FORMS WITHOUT PERMISSION FROM AU OPTRONICS CORP.

A. Physical specifications

NO.	Item	Specification	Remark
1	Display resolution (dot)	480(W)×234(H)	
2	Active area (mm)	48.0 (W) × 35.685 (H)	
3	Screen size (inch)	2.36 (Diagonal)	
4	Dot pitch (mm)	0.10 (W) × 0.1525 (H)	
5	Color configuration	R. G. B. delta	
6	Overall dimension (mm)	55.2 (W) × 47.55 (H) × 2.9 (D)	Note 1
7	Weight (g)	TBD	
8	Panel surface treatment	AG, Hard coating	

Note 1: Refer to Page 18 Fig. 1

ALL RIGHTS STRICTLY RESERVED. ANY PORTION OF THIS PRPER SHALL NOT BE REPRODUCED, COPIED, OR TRANSFORMED TO ANY OTHER FORMS WITHOUT PERMISSION FROM AU OPTRONICS CORP.

B. Electrical specifications

1.Pin assignment

Pin no	Symbol	I/O	Description	Remark
1	VCOM	I	Common electrode driving voltage	
2	Vgoff_H	PO	Negative high power supply for gate driver output: -12.5V+VCAC	
3	Vgoff_L	PO	Negative low power supply for gate driver output: -12.5V	
4	C4P	C	Pins to connect capacitance for power circuitry	
5	C4M	C	Pins to connect capacitance for power circuitry	
6	VGH	PO	Positive power supply for gate driver output: +12.5V	
7	FRP	O	Frame polarity output for VCOM	
8	VCAC	C	Define the amplitude of the VCOM swing	
9	Vint3	P	Intermediate voltage for charge Pump	
10	C3P	C	Pins to connect capacitance for power circuitry	
11	C3M	C	Pins to connect capacitance for power circuitry	
12	Vint2	P	Intermediate voltage for charge Pump	
13	C2P	C	Pins to connect capacitance for power circuitry	
14	C2M	C	Pins to connect capacitance for power circuitry	
15	Vint1	P	Intermediate volta for charge Pump	
16	C1P	C	Pins to connect capacitance for power circuitry	
17	C1M	C	Pins to connect capacitance for power circuitry	
18	PGND	P	Charge Pump Power GND	
19	PVDD	P	Charge Pump Power VDD	
20	DRV	PO	Gate signal for the power transistor of the boost converter	
21	LED Anode	I	For Led Anode voltage	
22	GND	P	Digital GND	
23	FB	P	Main boost regulator feedback input	
24	AVDD	P	Analog power supply	
25	GND	P	Digital GND	
26	VCC	P	Digital power supply	
27	CS	I	Serial communication chip select	
28	SDA	I	Serial communication data input	
29	SCL	I	Serial communication clock input	
30	HSYNC	I	Horizontal sync input	
31	VSYNC	I	Vertical sync input	
32	DCLK	I	Clock Input:	

ALL RIGHTS STRICTLY RESERVED. ANY PORTION OF THIS PRPER SHALL NOT BE REPRODUCED, COPIED, OR TRANSFORMED TO ANY OTHER FORMS WITHOUT PERMISSION FROM AU OPTRONICS CORP.

33	D7	I	Data Input: MSB	
34	D6	I	Data Input:	
35	D5	I	Data Input:	
36	D4	I	Data Input:	
37	D3	I	Data Input:	
38	D2	I	Data Input:	
39	D1	I	Data Input:	
40	D0	I	Data Input: LSB	

I: Input; O: Output. VI: voltage input VO: voltage output P:Power.

C: capacitor pin. PO: power out.

Note 1 : Definition of scanning direction. Refer to figure as below

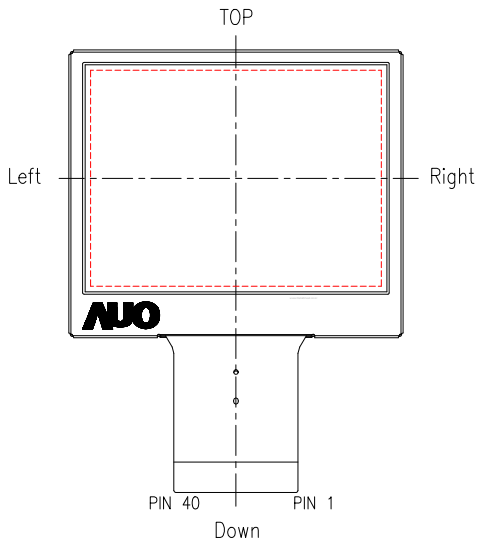

2. Absolute maximum ratings

Item	Symbol	Condition	Min.	Max.	Unit	Remark
Power voltage	V_{CC}	GND=0	-0.5	7.0	V	
	AV_{DD}	AV_{SS}=0	-0.5	7.0	V	
	PV_{DD}	PV_{SS}=0	-0.5	7.0	V	
Input signal voltage	Data	-	-0.3	3.6	V	
Operating temperature	Topa	-	-25	70	℃	Ambient temperature

ALL RIGHTS STRICTLY RESERVED. ANY PORTION OF THIS PRPER SHALL NOT BE REPRODUCED, COPIED, OR TRANSFORMED TO ANY OTHER FORMS WITHOUT PERMISSION FROM AU OPTRONICS CORP.

Storage temperature	Tstg	-	0	60	℃	Ambient temperature

3. Electrical characteristics

a. Typical operating conditions (GND=AVss=0V)

Item		Symbol	Min.	Typ.	Max.	Unit	Remark
Power Voltage		V_{CC}	2.7	3.0	3.6	V	
		PV_{DD},AV_{DD},	3.0	3.3	3.6	V	
		VCDC	0.25	0.45	0.65	V	
Output Signal voltage	H Level	V_{OH}	Vcc-0.4	-	VCC	V	
	L Level	V_{OL}	GND	-	GND+0.4	V	
Input Signal voltage	H Level	V_{IH}	$0.7xV_{CC}$	-	V_{CC}	V	
	L Level	V_{IL}	GND	-	$0.3V_{CC}$	V	
Output current	H Level	IOH	-	400	-	uA	
	L Level	IOL	-	-400	-	uA	
Analog stand by current		Ist	-	-	200	uA	DCLK is stopped

b. Current consumption (GND=AVss=0V)

Parameter	Symbol	Condition	Min.	Typ.	Max.	Unit	Remark
-	I_{VCC}(Pin 26)	V_{CC}=3.3V	-	2	2.5	mA	-
-	I_{AVDD}(Pin 24)	AV_{DD}=3.3V	1	1.5	2.0	mA	-
-	I_{PVDD}(Pin 19)	PV_{DD}=3.3V	8.5	9	9.5	mA	

c. LED driving conditions

Parameter	Symbol	Min.	Typ.	Max.	Unit	Remark
LED current			20	30	mA	
LED voltage	V_L	6.6	7.8	8.6	*V*	Note1
LED Life Time	L_L	10000			Hr	Note 2,3

Note 1 : Max.voltage :1pcs/4V, FB=0.6V, VL=LED anode(PIN 21)
Note 2 : Ta. = 25℃, I_L = 20mA
Note 3 : Brightness to be decreased to 50% of the initial value

4. AC Timing

a. Timing conditions

Parameter	Symbol	Min.	Typ.	Max.	Unit.
Delay between Hsync and DCLK	Thc	-	-	1	DCLK
Hysnc width	Twh	1.0	-	-	DCLK
Hsync period	Th	60	63.56	67	us
Vsync setup time	Tvst	12	-	-	ns

ALL RIGHTS STRICTLY RESERVED. ANY PORTION OF THIS PRPER SHALL NOT BE REPRODUCED, COPIED, OR TRANSFORMED TO ANY OTHER FORMS WITHOUT PERMISSION FROM AU OPTRONICS CORP.

Vsync hold time	Tvhd	12	-	-	ns
Hsync setup time	Thst	12	-	-	ns
Hsync hold time	Thhd	12	-	-	ns
Data set-up time	Tdsu	12	-	-	ns
Data hold time	Tdhd	12	-	-	Ns
Vsync to 1'th gate Output (No CCIR mode)	Tstv	6	13	21	Th
First active video line to 1'th Gate Output for NTSC (CCIR Mode)	Tstv	11	18	26	Th
First active video line to 1'th Gate Output for NTSC (CCIR Mode)	Tstv	17	24	32	Th
SD output stable time	Tst	-	-	30	us
GD output stable time	Tgst	-	500	1000	ns
Serial communication					
Serial clock period	Tsck	320	-	-	ns
Serial clock duty cycle	Tscw	40	50	60	%
Serial clock width	Tssw	120	-	-	ns
Serial data setup time	Tist	120	-	-	ns
Serial data hold time	Tihd	120	-	-	ns
CSB setup time	Tcst	120	-	-	ns
CSB data hold time	Tchd	120	-	-	ns
Chip select distinguish	Tcd	1	-	-	us
Delay between CSB and Vsync	Tcv	1	-	-	us

b. Select data input format

SEL2	SEL1	SEL0	Data input format	Operating frequency
0	0	0	UPS051 path, special data format: DDX	9.7 MHz
0	0	1	UPS052 data format	24.54 MHz
0	1	0	UPS052 data format	27 MHz
0	1	1	YUV mode A data format	24.54 MHz
1	0	0	YUV mode A data format	27 MHz
1	0	1	YUV mode B data format	24.54 MHz
1	1	0	YUV mode B data format	27 MHz
1	1	1	CCIR 656 path, normal data format: DIN	27 MHz

c. Operating mode dependent AC characteristic

UPS051 Mode, SEL [2…0]=[000]

ALL RIGHTS STRICTLY RESERVED. ANY PORTION OF THIS PRPER SHALL NOT BE REPRODUCED, COPIED, OR TRANSFORMED TO ANY OTHER FORMS WITHOUT PERMISSION FROM AU OPTRONICS CORP.

Parameter	Symbol	Min.	Typ.	Max.	Unit.
DCLK frequency	Fclk	-	9.7	-	Mhz
DCLK period	Tcph	-	103	-	ns
DCLK duty cycle	Tcw	40	50	60	%Tcph
Delay from Hsync to Source output	Thso	-	56	-	DCLK
Delay from Hsync to Gate output	Thgo	-	45	-	DCLK
Delay from Hsync to Gate output off	Thgz	-	19	-	DCLK
Delay from Hsync to Q1H	Thq	-	39	-	DCLK
Delay from Hsync to FRP	Thf	-	56	-	DCLK
Delay from Hsync to 1'st data input	Ths	84	100	115	DCLK
DC converter osc. Frequency	Fosc	-	303.1	-	khz

d. Operating mode dependent AC characteristic

UPS052 or YUV Mode, SEL [2…0]=[001~110]

Parameter	Symbol	Min.	Typ.	Max.	Unit.
DCLK frequency	Fclk	-	24.54/27	-	Mhz
DCLK period	Tcph	-	40	-	ns
DCLK duty cycle	Tcw	40	50	60	%Tcph
Delay from Hsync to Source output	Thso	-	143	-	DCLK
Delay from Hsync to Gate output	Thgo	-	113	-	DCLK
Delay from Hsync to Gate output off	Thgz	-	48	-	DCLK
Delay from Hsync to Q1H	Thq	-	100	-	DCLK
Delay from Hsync to FRP	Thf	-	143	-	DCLK
Delay from Hsync to 1'st data input	Ths	233	249	264	DCLK
DC converter osc. Frequency	Fosc	-	383.4/ 421.9	-	khz

e. Operating mode dependent AC characteristic

CCIR Mode, SEL [2…0]=[111]

Parameter	Symbol	Min.	Typ.	Max.	Unit.
DCLK frequency	Fclk	-	27	-	Mhz
DCLK period	Tcph	-	40	-	ns
DCLK duty cycle	Tcw	40	50	60	%Tcph
Delay from Hsync to Source output	Thso	-	143	-	DCLK
Delay from Hsync to Gate output	Thgo	-	113	-	DCLK
Delay from Hsync to Gate output off	Thgz	-	48	-	DCLK
Delay from Hsync to Q1H	Thq	-	100	-	DCLK
Delay from Hsync to FRP	Thf	-	143	-	DCLK
Delay from Hsync to 1'st data input	Ths	257	273	288	DCLK
DC converter osc. Frequency	Fosc	-	421.9	-	khz

ALL RIGHTS STRICTLY RESERVED. ANY PORTION OF THIS PRPER SHALL NOT BE REPRODUCED, COPIED, OR TRANSFORMED TO ANY OTHER FORMS WITHOUT PERMISSION FROM AU OPTRONICS CORP.

f. The configuration of serial data at SDA terminal is at below

MSB LSB

D15	D14	D13	D12	D11	D10	D9	D8	D7	D6	D5	D4	D3	D2	D1	D0
Register address			X	DATA											

Register parameters

		Address			Content					
No.	Description	D15	D14	D13	D5	D4	D3	D2	D1	D0
R0	System setting	0	0	0	-	-	GRB	STB	SHDB	SHCB
R2	Driver Setting	0	1	0	-	-	FPOL	VSET	U/D	SHL
R3	Timing setting	0	1	1	-	PALM	PAL	SEL2	SEL1	SEL0
R6	VCAC level setting	1	1	0	-	-	-	VSCL2	VSCL1	VSCL0
R7	Internal setting	1	1	1	-	TEST MODE			AVGY	DMDA

Default register settings **(UPS052, 24.54 MHz)**

		Address			Test	MSB											LSB
No.	Description	D15	D14	D13	D12	D11	D10	D9	D8	D7	D6	D5	D4	D3	D2	D1	D0
R0	System setting	0	0	0	0	0	X	X	X	X	X	X	X	1	1	1	1
R2	Driver Setting	0	1	0	0	X	X	X	X	X	X	X	X	0	0	1	1
R3	Timing setting	0	1	1	0	X	X	X	X	X	X	X	0	0	0	0	1
R6	VCAC level setting	1	1	0	0	X	X	X	X	X	X	X	X	X	1	1	0
R7	Internal Register	1	1	1	0	X	X	X	X	X	X	X	0	0	0	1	1

“X” => Don’t care.

Default register settings **(UPS051, 9.7 MHz)**

		Address			Test	MSB											LSB
No.	Description	D15	D14	D13	D12	D11	D10	D9	D8	D7	D6	D5	D4	D3	D2	D1	D0
R0	System setting	0	0	0	0	0	X	X	X	X	X	X	X	1	1	1	1
R2	Driver Setting	0	1	0	0	X	X	X	X	X	X	X	X	X	X	1	1
R3	Timing setting	0	1	1	0	X	X	X	X	X	X	X	X	X	0	0	0
R6	VCAC level setting	1	1	0	0	X	X	X	X	X	X	X	X	X	1	1	0

“X” => Don’t care.

Default register settings **(CCIR601 27MHz)**

		Address			Test	MSB											LSB
No.	Description	D15	D14	D13	D12	D11	D10	D9	D8	D7	D6	D5	D4	D3	D2	D1	D0
R0	System setting	0	0	0	0	0	X	X	X	X	X	X	X	1	1	1	1
R2	Driver Setting	0	1	0	0	X	X	X	X	X	X	X	X	X	X	1	1
R3	Timing setting	0	1	1	0	X	X	X	X	X	X	X	X	X	1	1	0

ALL RIGHTS STRICTLY RESERVED. ANY PORTION OF THIS PRPER SHALL NOT BE REPRODUCED, COPIED, OR TRANSFORMED TO ANY OTHER FORMS WITHOUT PERMISSION FROM AU OPTRONICS CORP.

R6	VCAC level setting	1	1	0	0	X	X	X	X	X	X	X	X	X	1	1	0
R7	Internal Register	1	1	1	0	X	X	X	X	X	X	X	0	0	0	1	1

"X" => Don't care.

Default register settings **(CCIR656 27MHz)**

		Address			Test	MSB											LSB
No.	Description	D15	D14	D13	D12	D11	D10	D9	D8	D7	D6	D5	D4	D3	D2	D1	D0
R0	System setting	0	0	0	0	0	X	X	X	X	X	X	X	1	1	1	1
R2	Driver Setting	0	1	0	0	X	X	X	X	X	X	X	X	X	X	1	1
R3	Timing setting	0	1	1	0	X	X	X	X	X	X	X	X	X	1	1	1
R6	VCAC level setting	1	1	0	0	X	X	X	X	X	X	X	X	X	1	1	0
R7	Internal Register	1	1	1	0	X	X	X	X	X	X	X	0	0	0	1	1

"X" => Don't care.

Detail register function:

R0	GRB	I	Global reset pin (active low). GRB="L": The controller is resets, the charge pump and DCDC is off. GRB="H": Normal operation. **Default setting.**
R0	STB	I	Stand by mode (active low). STB="L": T_CON, source driver and DC-DC converter are off. All outputs are High-Z. STB="H": Normal operation. **Default setting.**
R0	SHDB	I	DC-DC converter shutdown signal (active low) SHDB="L": DC-DC converter is off. **Default setting.** SHDB="H": DC-DC converter is on.
R0	SHCB	I	Charge pump shutdown signal (active low). SHDB="L": Charge pump is off. SHDB="H": Charge pump is on. **Default setting.**
R2	U/D	I	Up/down scan control of gate driver. U/D="L": Scan up: First line=G240➔G239➔…➔G2➔Last line=G1. U/D="H": Scan down: First line=G1➔G2➔…➔G239➔Last line=G240. **Default setting.**
R2	SHL	I	Select left or right shift. SHL="L": Shift left: First data=S480➔S479➔…➔S2➔Last data=S1. SHL="H": Shift right: First data=S1➔S2➔…➔S479➔Last data=S480. **Default setting.**

ALL RIGHTS STRICTLY RESERVED. ANY PORTION OF THIS PRPER SHALL NOT BE REPRODUCED, COPIED, OR TRANSFORMED TO ANY OTHER FORMS WITHOUT PERMISSION FROM AU OPTRONICS CORP.

<table>
<tr><td>R3</td><td>PAL</td><td>I</td><td>NTSC/PAL selection signal
PAL=”L”: Input data format is NTSC (240 active line). Default setting.
PAL=”H”: Input data format is PAL.</td></tr>
<tr><td>R3</td><td>PALM</td><td>I</td><td>PAL selection signal
PALM=”L”: Input data format is PAL 1/6,8(280 active line). Default setting.
PALM=”H”: Input data format is PAL 1/6(288 active line).
Only available when PAL=H.</td></tr>
<tr><td>R3</td><td>SEL [2…0]</td><td>I</td><td>Select input data format.</td></tr>
<tr><td>R6</td><td>VSCL [2...0]</td><td>I</td><td>VCAC voltage selection
<table>
<tr><th>VCSL</th><th>VCAC[V]</th></tr>
<tr><td>010</td><td>5</td></tr>
<tr><td>011</td><td>5.2</td></tr>
<tr><td>100</td><td>5.4</td></tr>
<tr><td>101</td><td>5.6</td></tr>
<tr><td>110</td><td>5.8</td></tr>
<tr><td>111</td><td>6</td></tr>
<tr><td>000</td><td>6.2</td></tr>
<tr><td>001</td><td>6.4</td></tr>
</table></td></tr>
<tr><td>R7</td><td>AVGY</td><td>I</td><td>Luminance data averaging
AVGY=”L”: Only odd Y sample used for YUV conversion
AVGY=”H”: Use odd and even Y sample for YUV conversion. Default setting.</td></tr>
<tr><td>R7</td><td>DMDA</td><td>I</td><td>Delta mode data alignment
DMDA=”L”: Data alignment does not take care of Delta pixels arrangement.
DMDA=”H”: Data arrangement takes of the Delta pixels arrangement. Default setting.</td></tr>
</table>

Charge pump Application circuit

ALL RIGHTS STRICTLY RESERVED. ANY PORTION OF THIS PRPER SHALL NOT BE REPRODUCED, COPIED, OR TRANSFORMED TO ANY OTHER FORMS WITHOUT PERMISSION FROM AU OPTRONICS CORP.

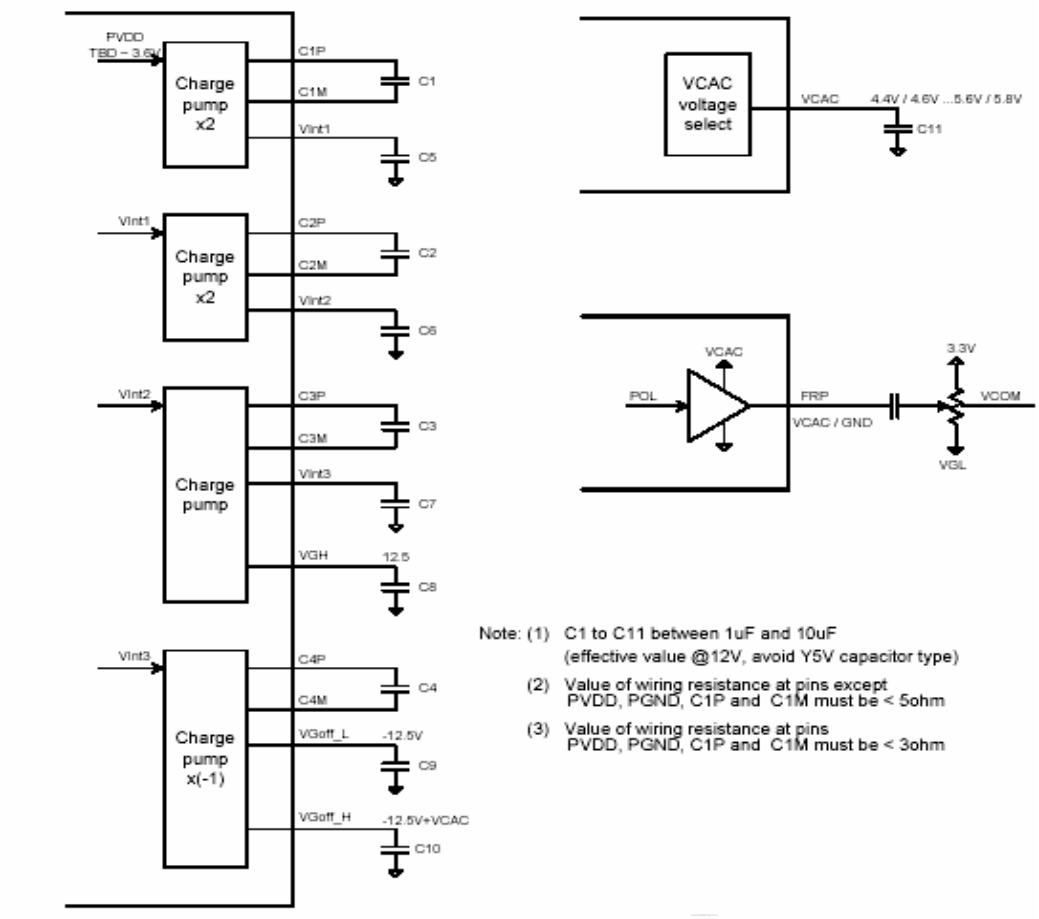

5. Reference Circuit

(Note. both of HS and VS should be connected to GND，VCC or system board but not floating only when using CCIR656 interface)

ALL RIGHTS STRICTLY RESERVED. ANY PORTION OF THIS PRPER SHALL NOT BE REPRODUCED, COPIED, OR TRANSFORMED TO ANY OTHER FORMS WITHOUT PERMISSION FROM AU OPTRONICS CORP.

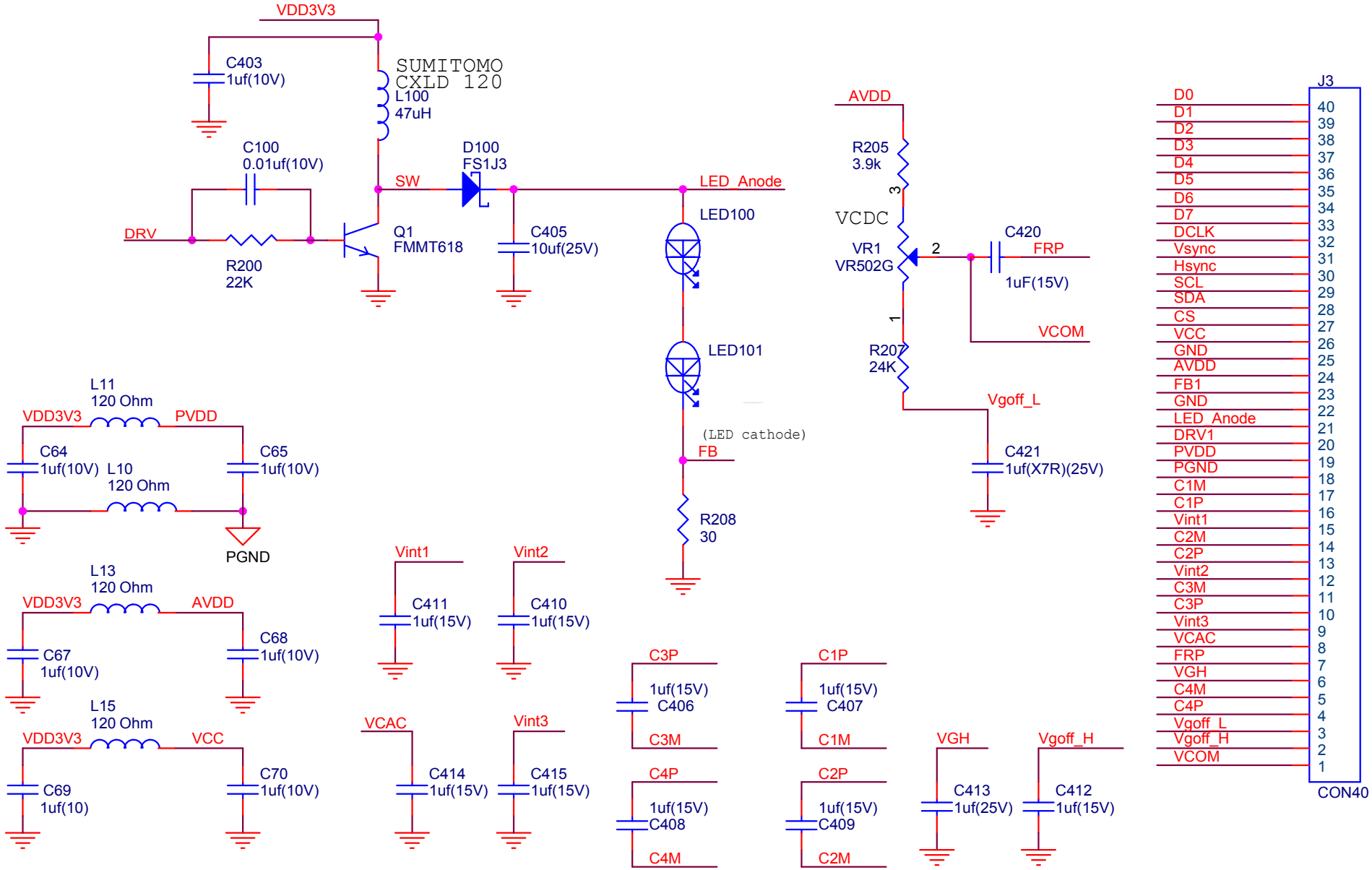
VDD3V3
C403
1uf(10V)
SUMITOMO
CXLD 120
L100
47uH
C100
0.01uf(10V)
D100
FS1J3
SW
LED_Anode
DRV
R200
22K
Q1
FMMT618
C405
10uf(25V)
LED100
LED101
(LED cathode)
FB
R208
30
AVDD
R205
3.9k
VCDC
VR1
VR502G
C420
FRP
1uF(15V)
VCOM
R207
24K
Vgoff_L
C421
1uf(X7R)(25V)
L11
120 Ohm
VDD3V3
PVDD
C64
1uf(10V)
L10
120 Ohm
C65
1uf(10V)
PGND
L13
120 Ohm
VDD3V3
AVDD
C67
1uf(10V)
C68
1uf(10V)
L15
120 Ohm
VDD3V3
VCC
C69
1uf(10)
C70
1uf(10V)
Vint1
C411
1uf(15V)
Vint2
C410
1uf(15V)
VCAC
C414
1uf(15V)
Vint3
C415
1uf(15V)
C3P
1uf(15V)
C406
C3M
C4P
1uf(15V)
C408
C4M
C1P
1uf(15V)
C407
C1M
C2P
1uf(15V)
C409
C2M
VGH
C413
1uf(25V)
Vgoff_H
C412
1uf(15V)
J3
D0 40
D1 39
D2 38
D3 37
D4 36
D5 35
D6 34
D7 33
DCLK 32
Vsync 31
Hsync 30
SCL 29
SDA 28
CS 27
VCC 26
GND 25
AVDD 24
FB1 23
GND 22
LED_Anode 21
DRV1 20
PVDD 19
PGND 18
C1M 17
C1P 16
Vint1 15
C2M 14
C2P 13
Vint2 12
C3M 11
C3P 10
Vint3 9
VCAC 8
FRP 7
VGH 6
C4M 5
C4P 4
Vgoff_L 3
Vgoff_H 2
VCOM 1
CON40

C. Optical specification (Note 1,Note 2, Note 3)

Item		Symbol	Condition	Min.	Typ.	Max.	Unit	Remark
Response time	Rise	Tr	θ =0°	-	20	30	ms	Note 4, 6
	Fall	Tf		-	30	40	ms	
Contrast ratio		CR	At optimized viewing angle	150	300	-		Note 5, 6
Viewing angle	Top		CR≧10	10	15	-	deg.	Note 6, 7
	Bottom			30	35	-		
	Left			40	45	-		
	Right			40	45	-		
Brightness			θ =0°	180	230	-	nits	
White chromaticity shift		X	θ =0°	(0.26)	(0.31)	(0.36)		
		y		(0.28)	(0.33)	(0.38)		

Note 1. Ambient temperature =25℃.

Note 2. To be measured in the dark room.

Note 3.To be measured on the center area of panel with a field angle of 1°by Topcon luminance meter BM-7, after 10 minutes operation.

Note 4. Definition of response time:

The output signals of photo detector are measured when the input signals are changed from “black” to “white”(falling time) and from “white” to “black”(rising time), respectively. The response time is defined as the time interval between the 10% and 90% of amplitudes. Refer to figure as below.

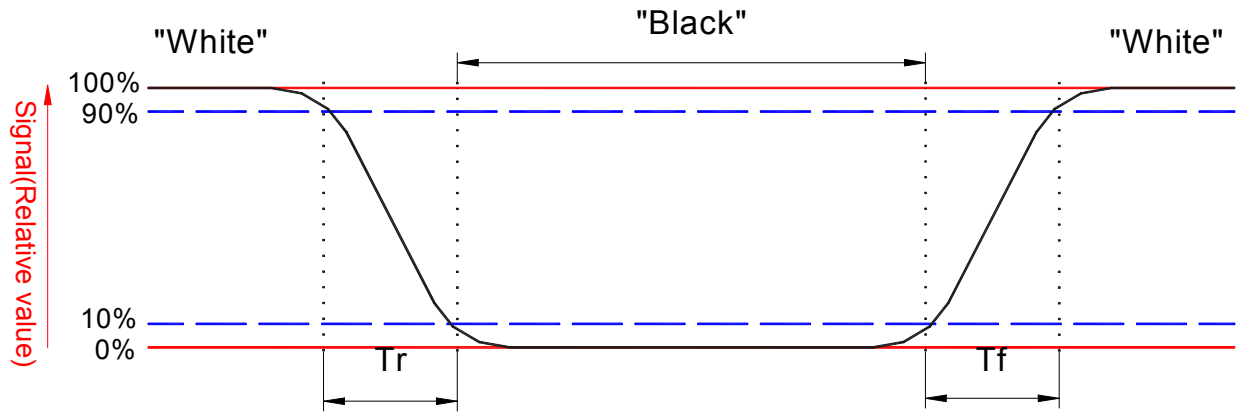

Note 5. Definition of contrast ratio:

Contrast ratio is calculated with the following formula.

$$\text{Contrast ratio (CR)} = \frac{\text{Photo detector output when LCD is at “White” state}}{\text{Photo detector output when LCD is at “Black” state}}$$

Note 6. White $Vi=V_{i50} \mp 1.5V$

Black $Vi=V_{i50} \pm 2.0V$

“±” Means that the analog input signal swings in phase with COM signal.

"$\overline{}$" Means that the analog input signal swings out of phase with COM signal.
V_{i50} : The analog input voltage when transmission is 50%
The 100% transmission is defined as the transmission of LCD panel when all the input terminals of module are electrically opened.

Note 7. Definition of viewing angle:
Refer to figure as below.

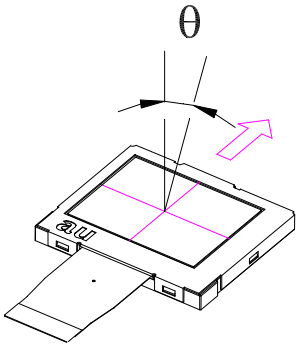

Note 8. 479 dots at the odd scan lines:
Refer to figure as below.

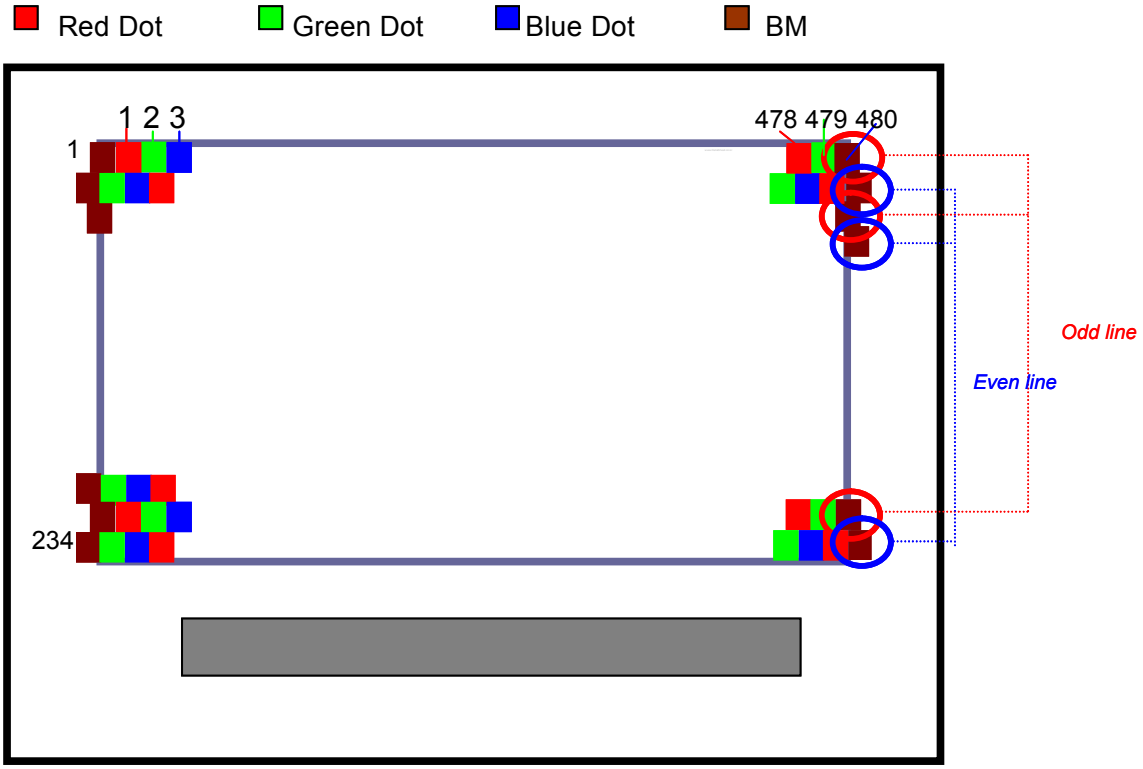

ALL RIGHTS STRICTLY RESERVED. ANY PORTION OF THIS PRPER SHALL NOT BE REPRODUCED, COPIED, OR TRANSFORMED TO ANY OTHER FORMS WITHOUT PERMISSION FROM AU OPTRONICS CORP.

D. Reliability test items:

No.	Test items	Conditions	Remark
1	High temperature storage	Ta= 70℃ 240Hrs	
2	Low temperature storage	Ta= -25℃ 240Hrs	
3	High temperature operation	Ta= 60℃ 240Hrs	
4	Low temperature operation	Ta= 0℃ 240Hrs	
5	High temperature and high humidity	Ta= 60℃. 90% RH 240Hrs	Operation
6	Heat shock	-25℃~80℃/50 cycle 2Hrs/cycle	Non-operation
7	Electrostatic discharge	±200V,200pF(0Ω), once for each terminal	Non-operation
8	Vibration (with carton)	Random vibration: $0.015G^2$/Hz from 5~200Hz –6dB/Octave from 200~500Hz	IEC 68-34
9	Drop (with carton)	Height: 60cm 1 corner, 3 edges, 6 surfaces	

Note: Ta: Ambient temperature.

ALL RIGHTS STRICTLY RESERVED. ANY PORTION OF THIS PRPER SHALL NOT BE REPRODUCED, COPIED, OR TRANSFORMED TO ANY OTHER FORMS WITHOUT PERMISSION FROM AU OPTRONICS CORP.

E. Packing form

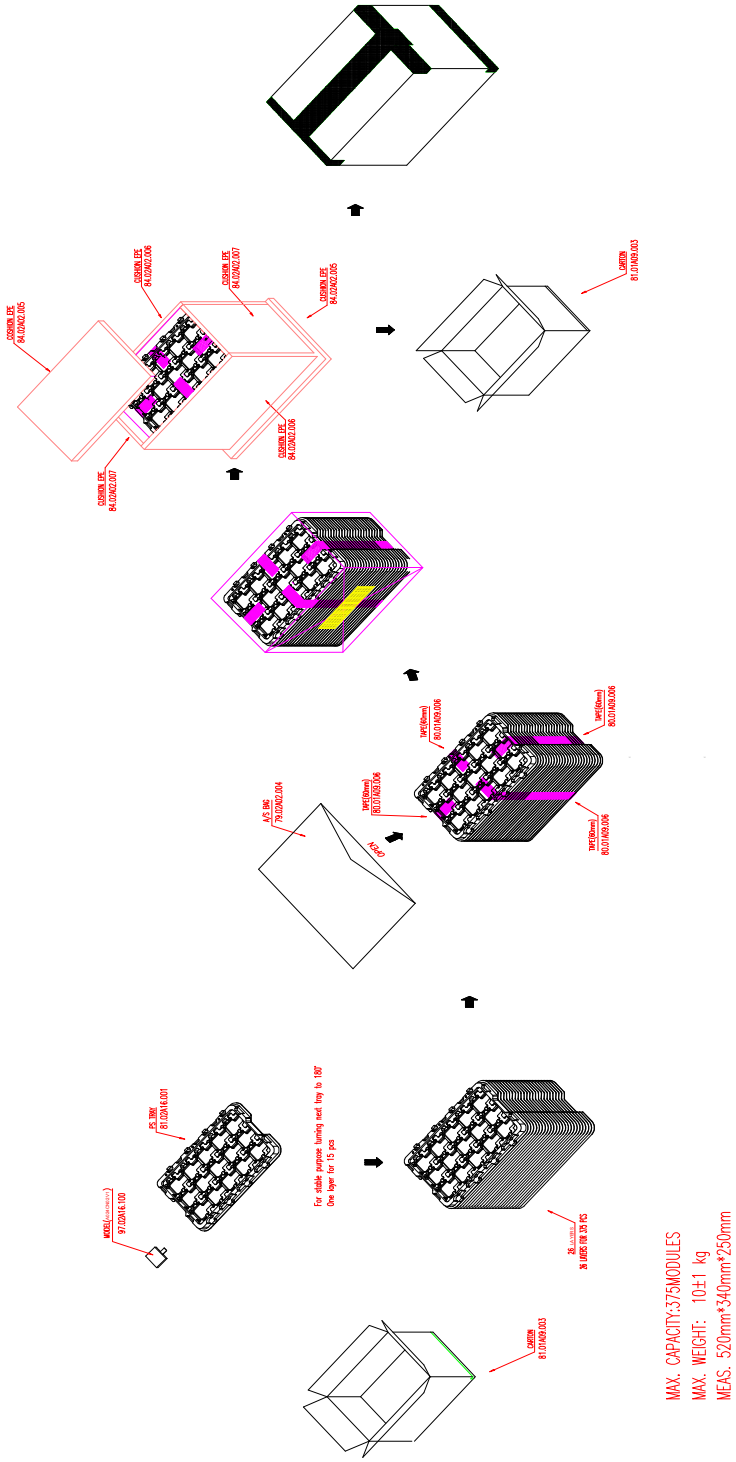

MAX. CAPACITY:375MODULES
MAX. WEIGHT: 10±1 kg
MEAS. 520mm*340mm*250mm

ALL RIGHTS STRICTLY RESERVED. ANY PORTION OF THIS PRPER SHALL NOT BE REPRODUCED, COPIED, OR TRANSFORMED TO ANY OTHER FORMS WITHOUT PERMISSION FROM AU OPTRONICS CORP.

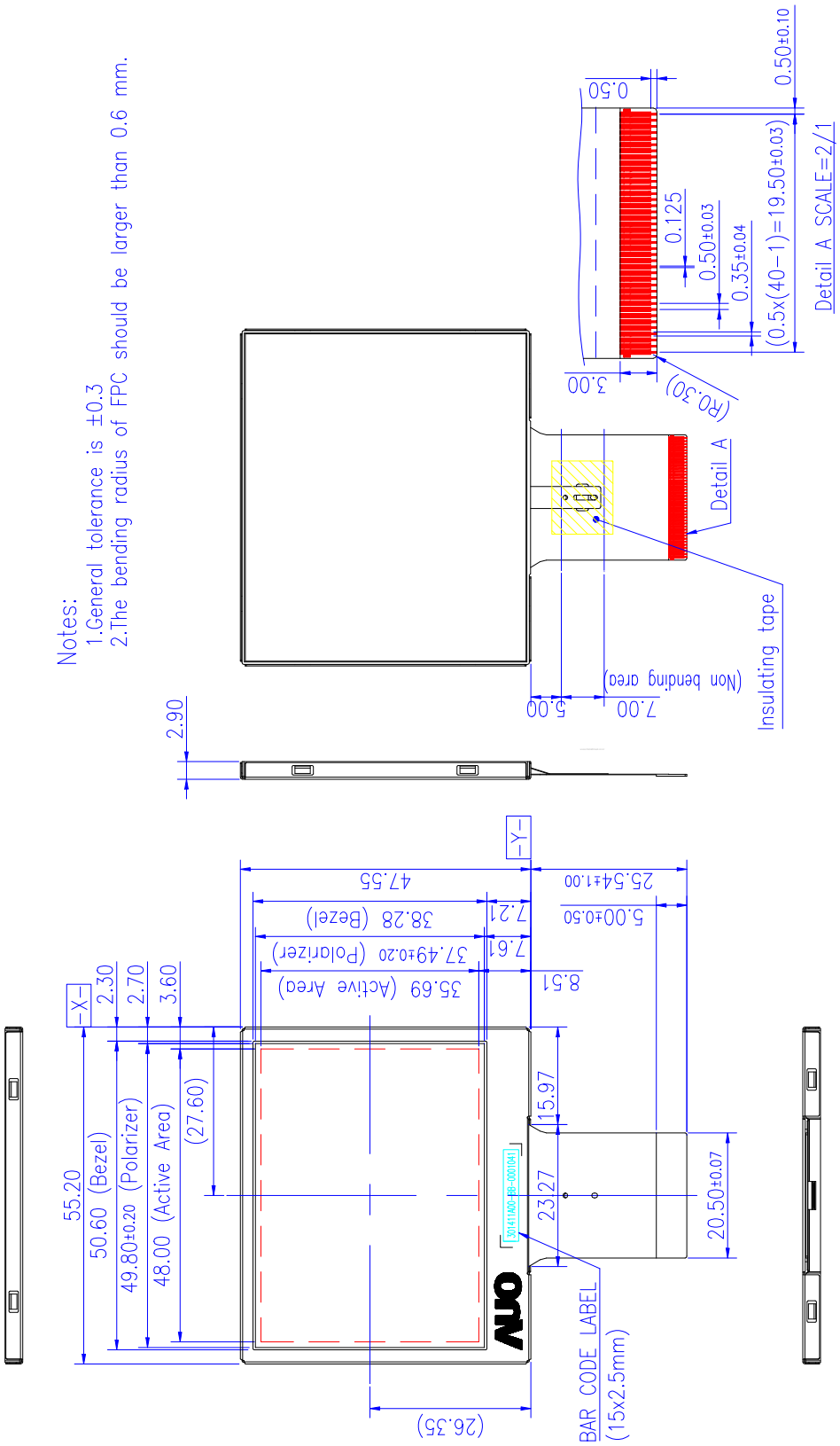

Fig. 1 Outline dimension of TFT-LCD module

ALL RIGHTS STRICTLY RESERVED. ANY PORTION OF THIS PRPER SHALL NOT BE REPRODUCED, COPIED, OR TRANSFORMED TO ANY OTHER FORMS WITHOUT PERMISSION FROM AU OPTRONICS CORP.

F. Timing format

Serial communication timing

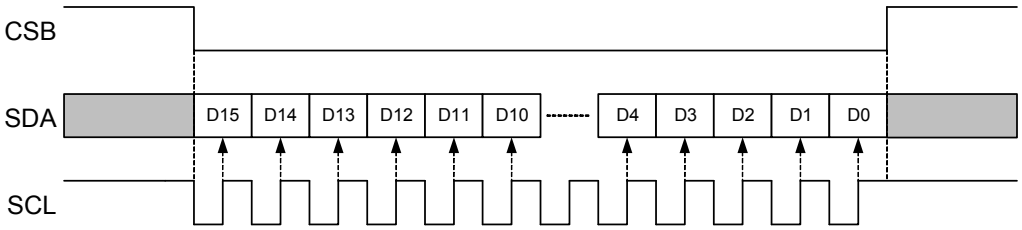

Figure 1: Serial communication diagram

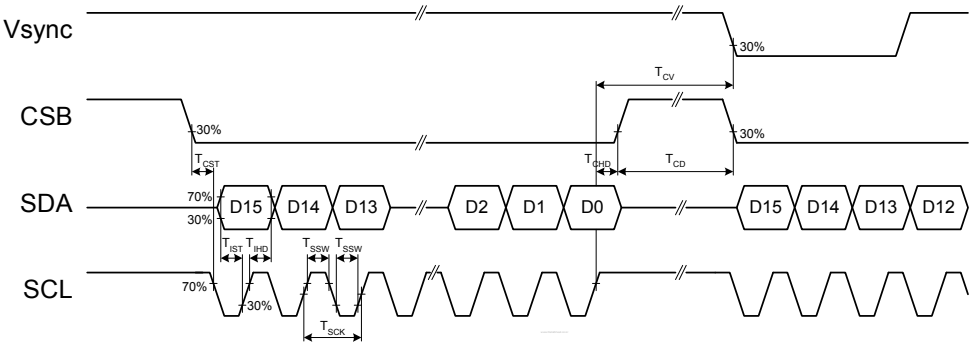

Figure 2: Serial communication timing

ALL RIGHTS STRICTLY RESERVED. ANY PORTION OF THIS PRPER SHALL NOT BE REPRODUCED, COPIED, OR TRANSFORMED TO ANY OTHER FORMS WITHOUT PERMISSION FROM AU OPTRONICS CORP.

Input timing

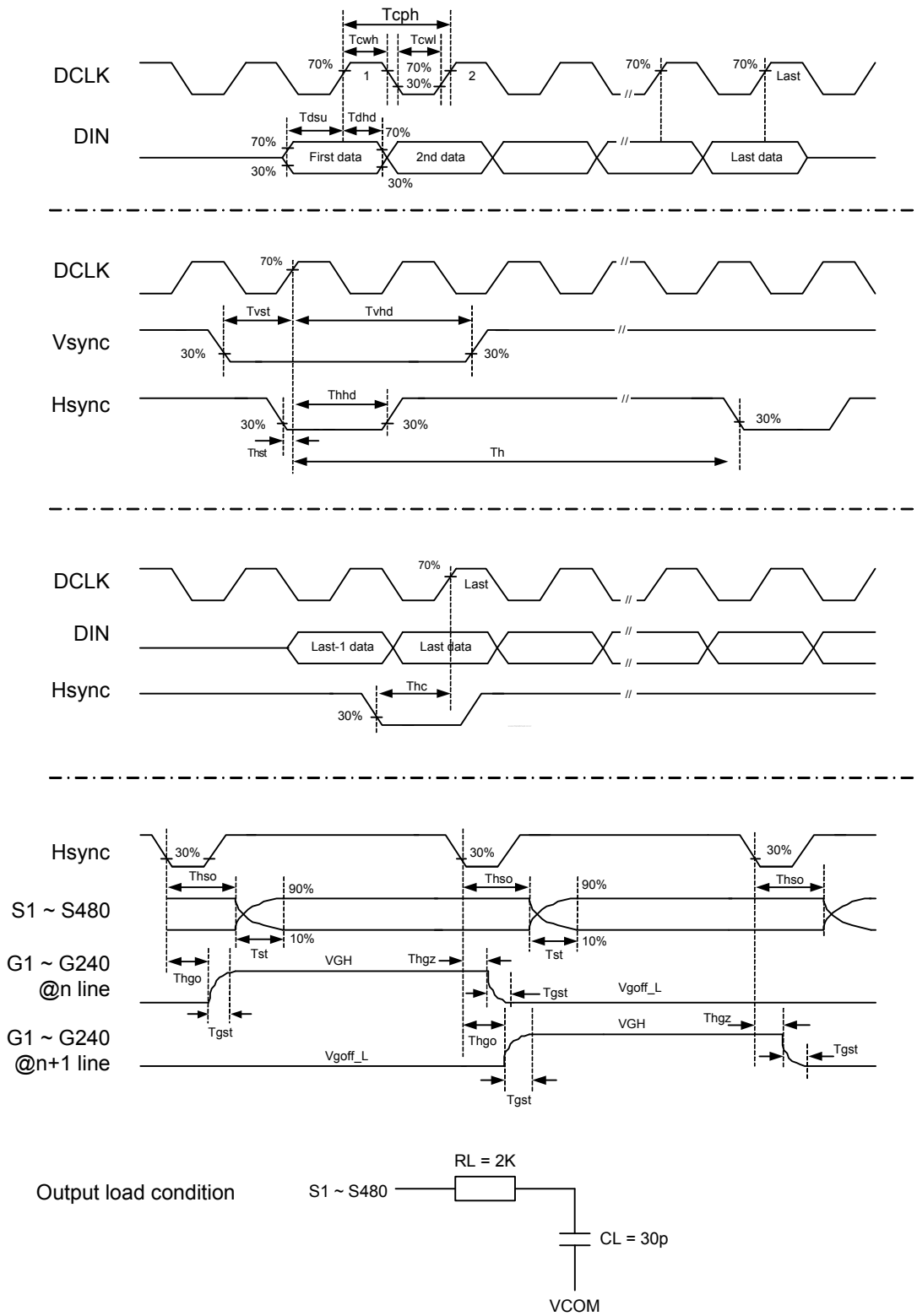

Figure 3: Drivers timing

ALL RIGHTS STRICTLY RESERVED. ANY PORTION OF THIS PRPER SHALL NOT BE REPRODUCED, COPIED, OR TRANSFORMED TO ANY OTHER FORMS WITHOUT PERMISSION FROM AU OPTRONICS CORP.

Stand-by timing

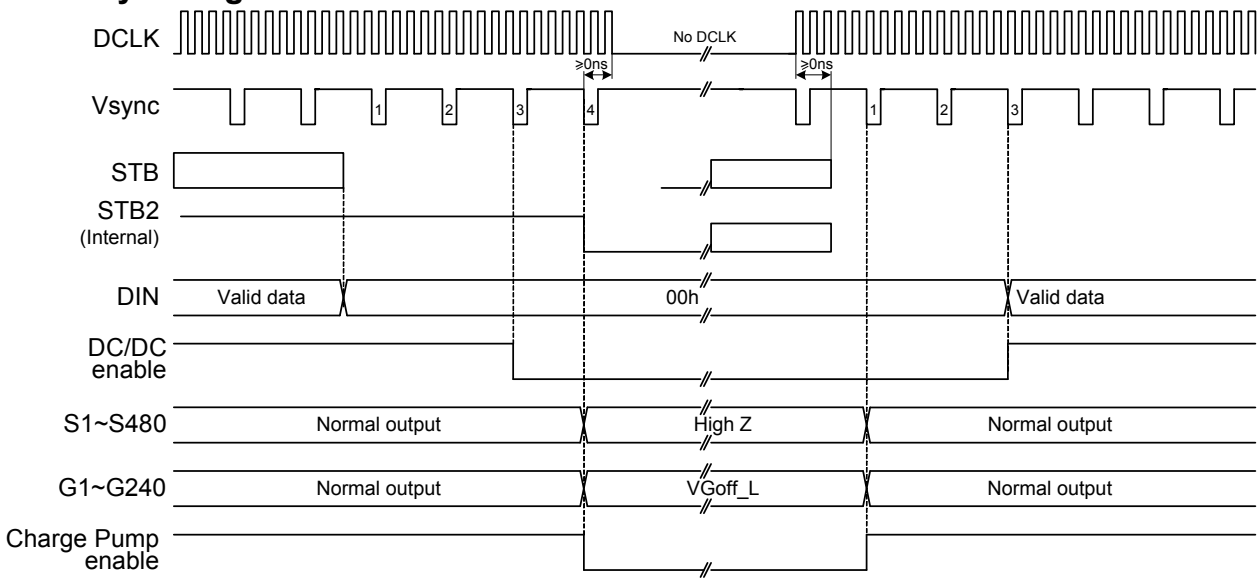

Figure 4: Stand-by timing diagram

During No CLK, Hsync and Vsync can be stopped. But in all other cases Hsync and Vsync must be active.

Power sequence

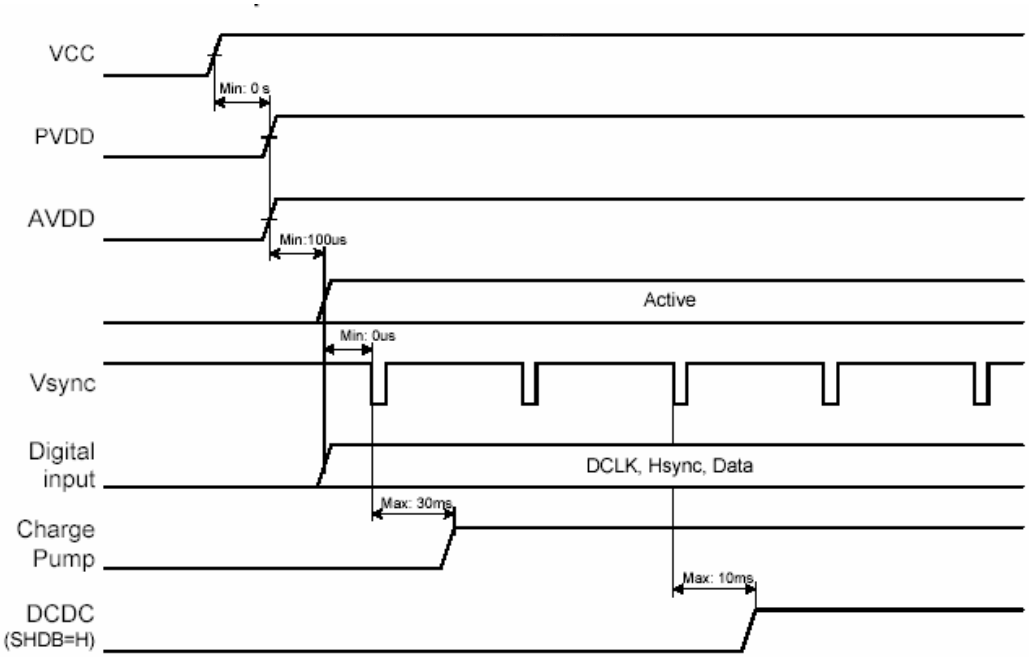

Figure 4-1: Data sampling timing

ALL RIGHTS STRICTLY RESERVED. ANY PORTION OF THIS PRPER SHALL NOT BE REPRODUCED, COPIED, OR TRANSFORMED TO ANY OTHER FORMS WITHOUT PERMISSION FROM AU OPTRONICS CORP.

Suggested VCC slew rate

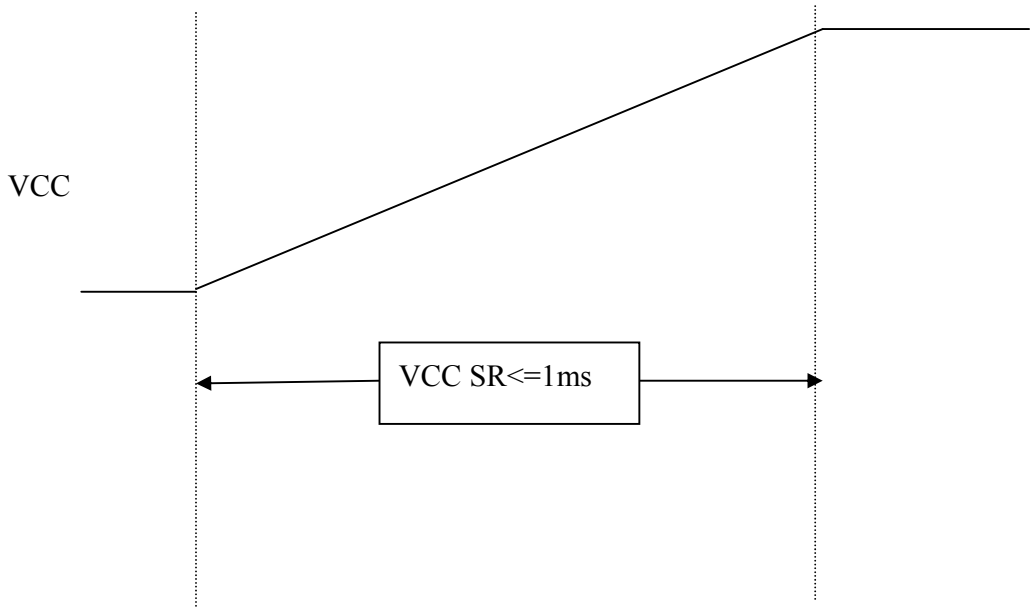

Figure 4-2 Suggested VCC slew rate

Power off sequence

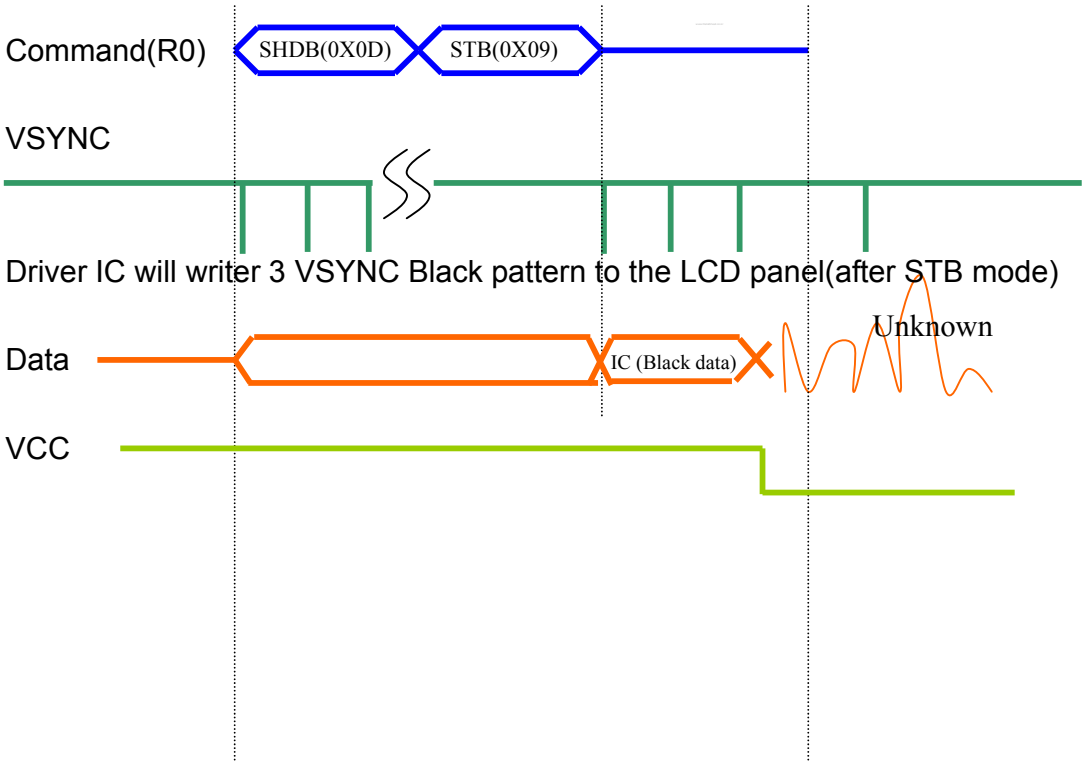

Figure 4-3 Power off sequence

ALL RIGHTS STRICTLY RESERVED. ANY PORTION OF THIS PRPER SHALL NOT BE REPRODUCED, COPIED, OR TRANSFORMED TO ANY OTHER FORMS WITHOUT PERMISSION FROM AU OPTRONICS CORP.

UPS051 timing

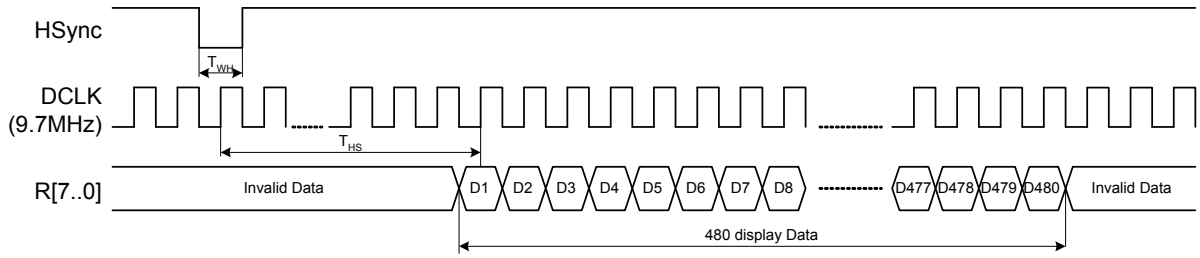

Figure 5-1: Data sampling timing

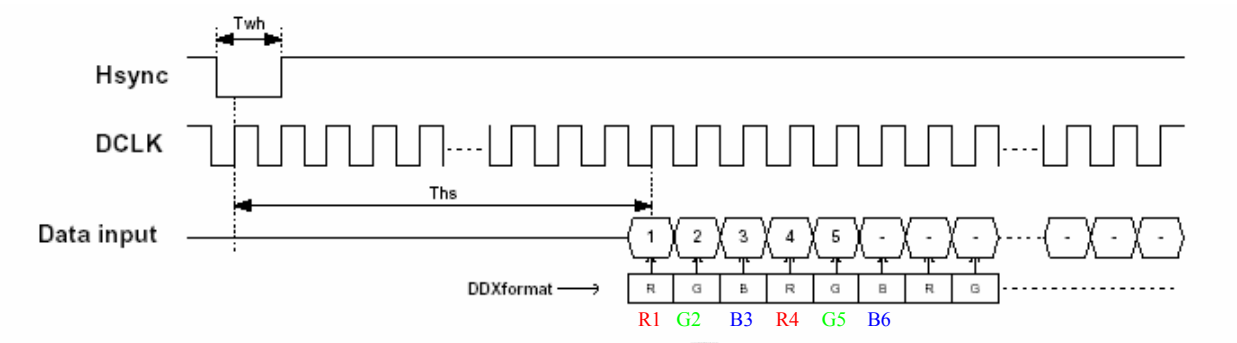

Figure 5-2: RGB format

The timing reference should be made sure that R1G2 B3 represent the same pixel ； R4G5B6 represent the same pixel，and so on.

UPS052 timing

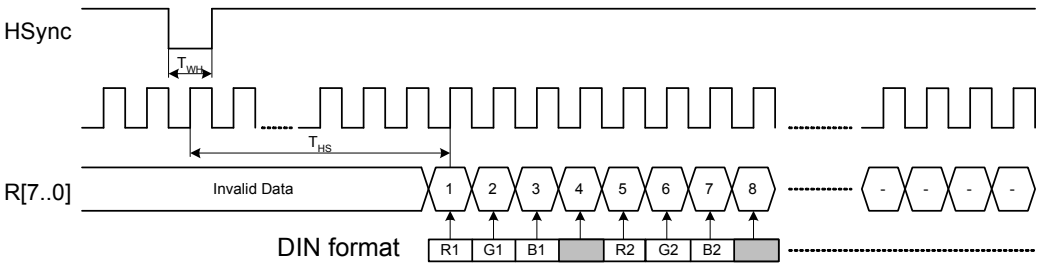

Figure 6: Data sampling

ALL RIGHTS STRICTLY RESERVED. ANY PORTION OF THIS PRPER SHALL NOT BE REPRODUCED, COPIED, OR TRANSFORMED TO ANY OTHER FORMS WITHOUT PERMISSION FROM AU OPTRONICS CORP.

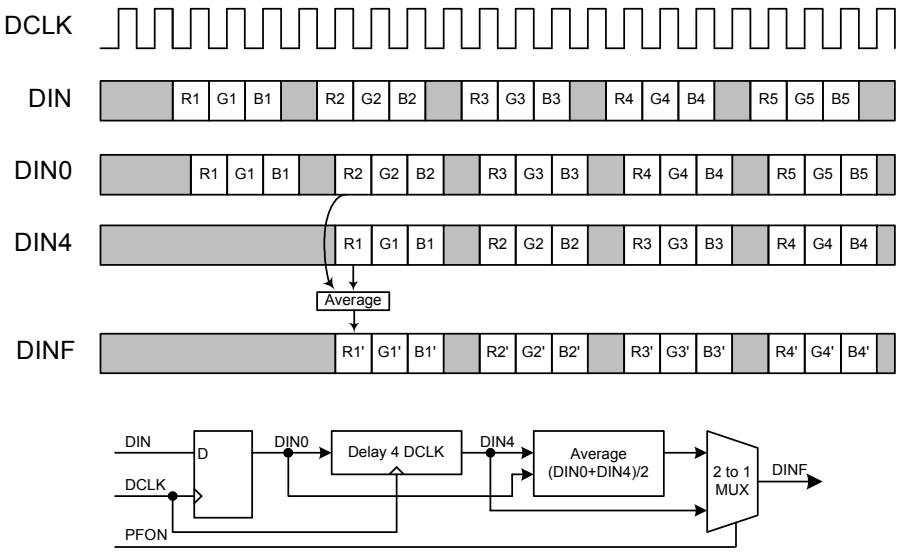

Figure 7: Data pre-filtering

ALL RIGHTS STRICTLY RESERVED. ANY PORTION OF THIS PRPER SHALL NOT BE REPRODUCED, COPIED, OR TRANSFORMED TO ANY OTHER FORMS WITHOUT PERMISSION FROM AU OPTRONICS CORP.

UPS052 24.54MHz timing

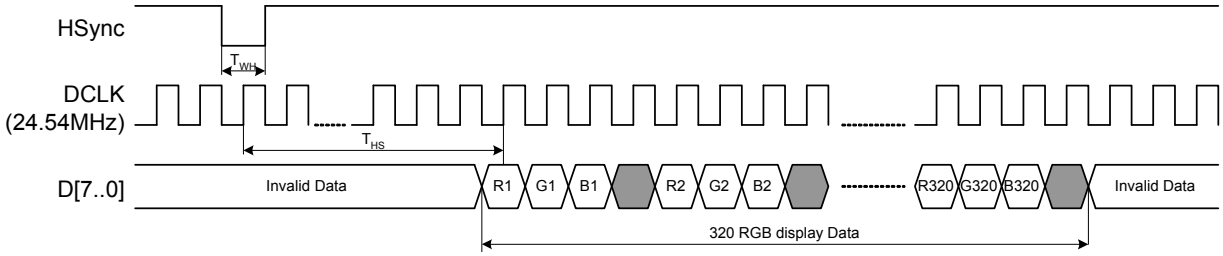

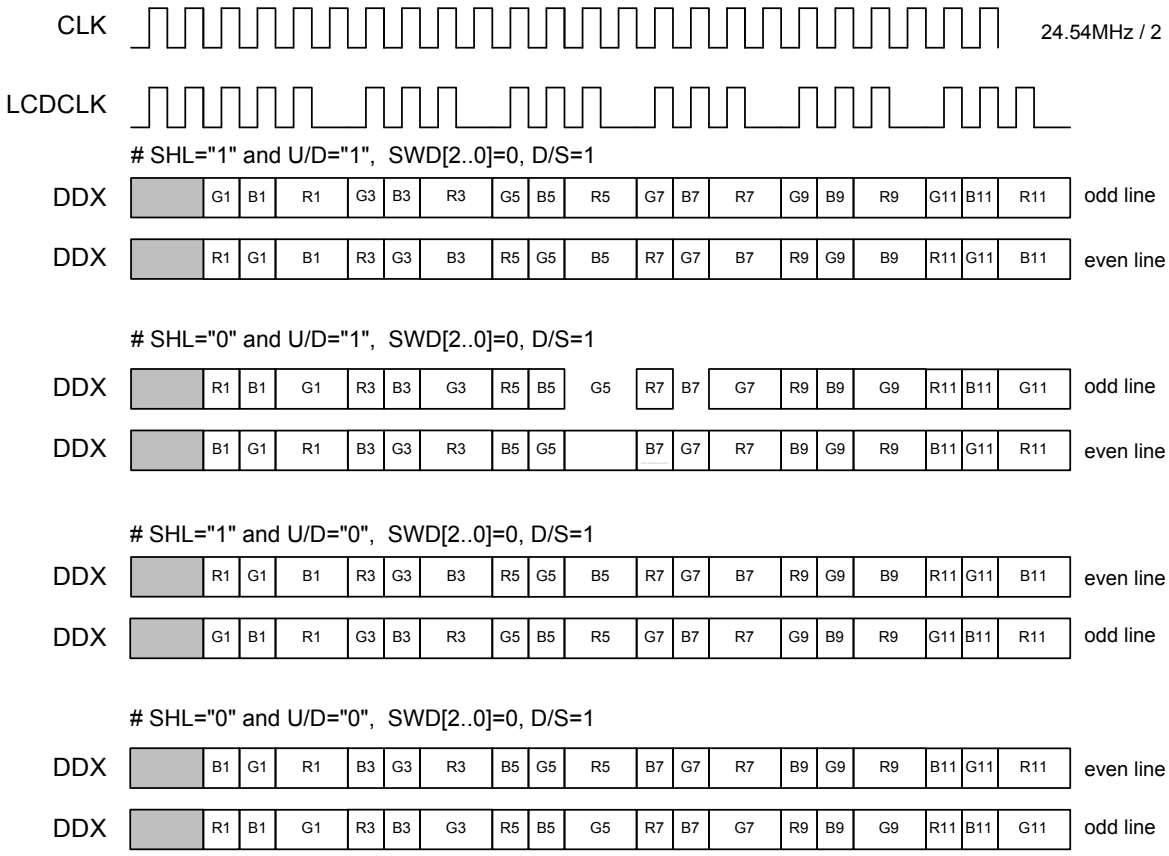

Figure 8: Data alignment D/S=1

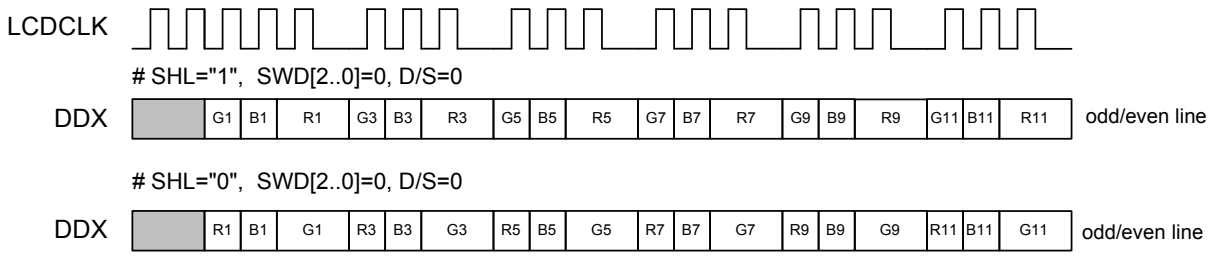

Figure 9: Data alignment D/S=0

ALL RIGHTS STRICTLY RESERVED. ANY PORTION OF THIS PRPER SHALL NOT BE REPRODUCED, COPIED, OR TRANSFORMED TO ANY OTHER FORMS WITHOUT PERMISSION FROM AU OPTRONICS CORP.

UPS052 27MHz timing

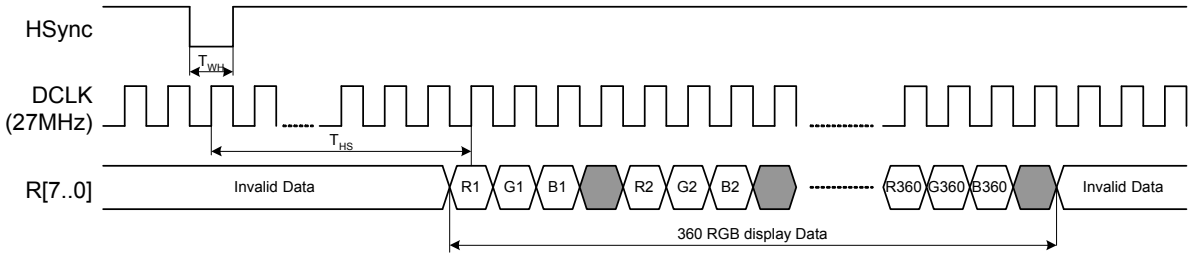

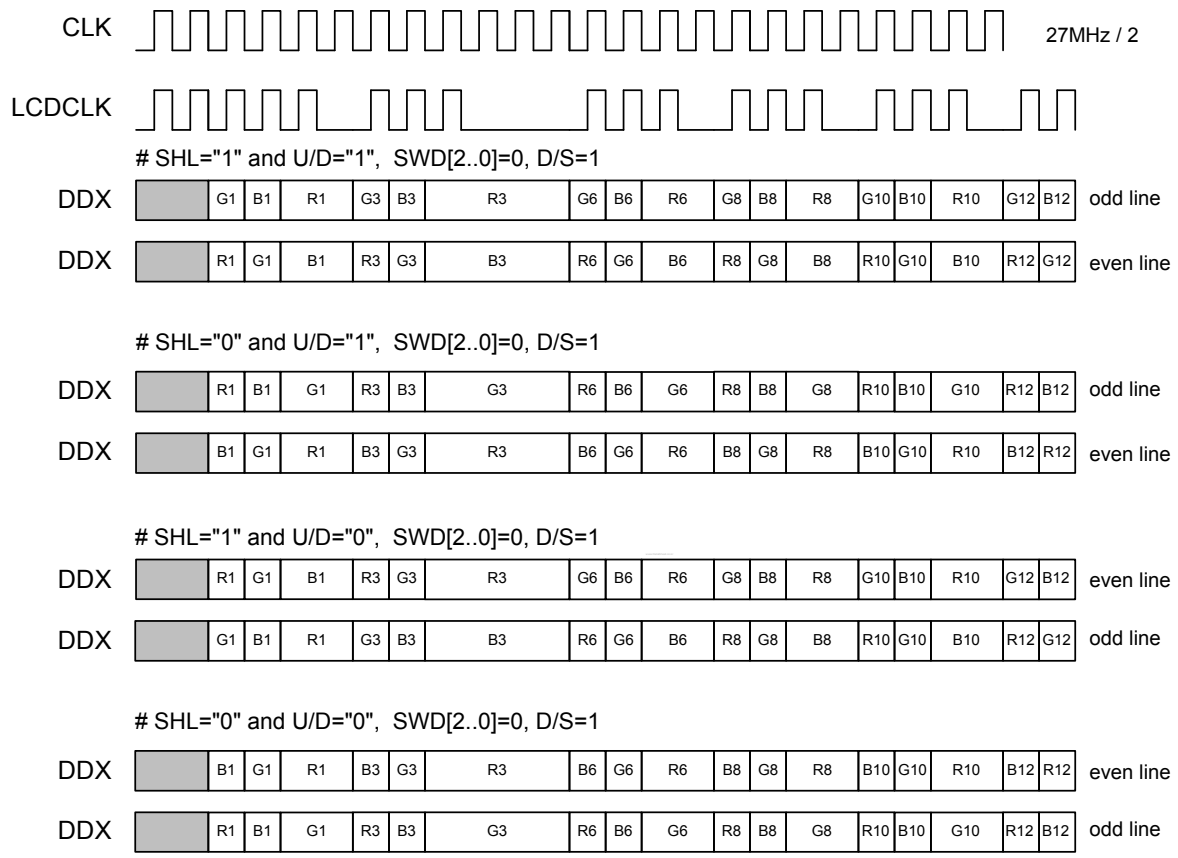

Figure 10: Data alignment

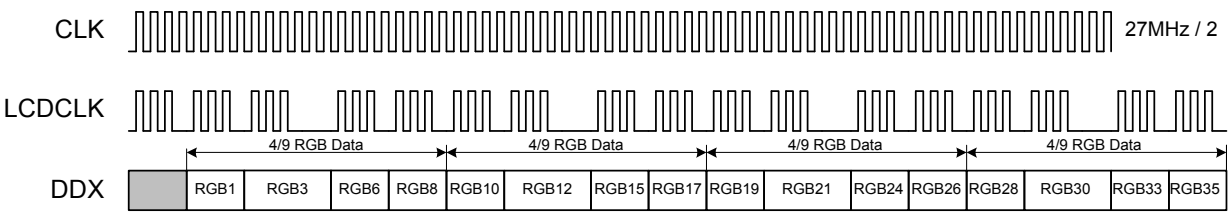

Figure 11: Data skip

ALL RIGHTS STRICTLY RESERVED. ANY PORTION OF THIS PRPER SHALL NOT BE REPRODUCED, COPIED, OR TRANSFORMED TO ANY OTHER FORMS WITHOUT PERMISSION FROM AU OPTRONICS CORP.

YUV timing

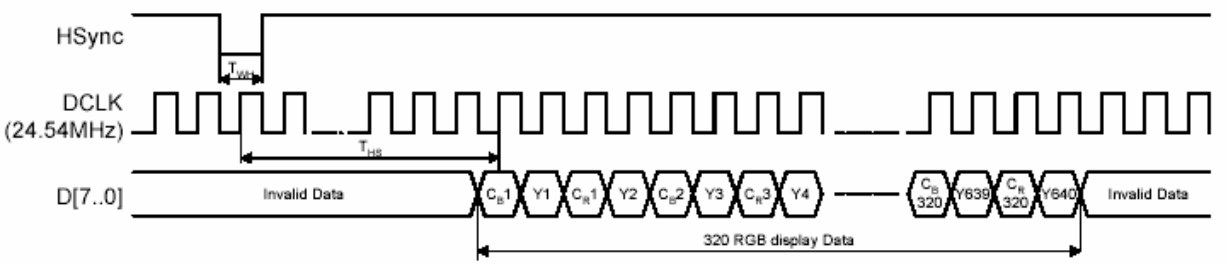

Figure 12: YUV mode A 24.54MHz Data input format

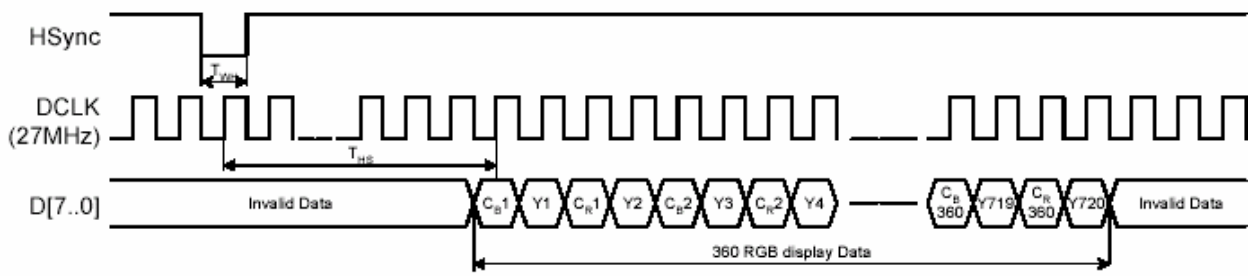

Figure 13: YUV mode A 27MHz Data input format

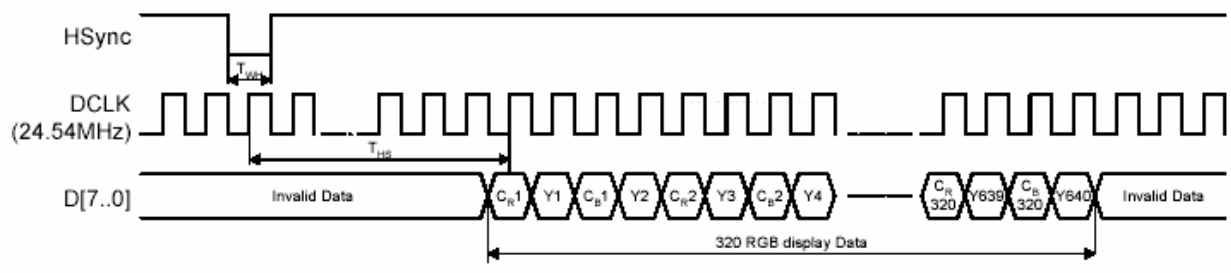

Figure 14: YUV mode B 24.54MHz Data input format

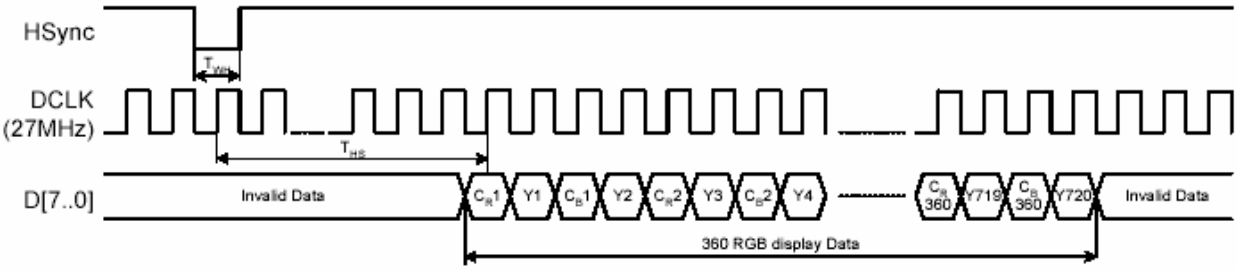

Figure 15: YUV mode B 27MHz Data input format

ALL RIGHTS STRICTLY RESERVED. ANY PORTION OF THIS PRPER SHALL NOT BE REPRODUCED, COPIED, OR TRANSFORMED TO ANY OTHER FORMS WITHOUT PERMISSION FROM AU OPTRONICS CORP.

CCIR 656 timing

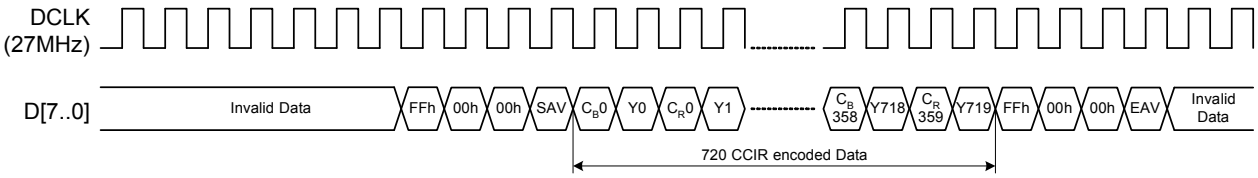

Figure 12: CCIR Data input format

In CCIR mode, data sampling start after SAV timing codes.

YUV to RGB conversion

Conversion between YUV and RGB follow ITU-R BT 601-5 recommendation
This conversion is used for SEL [2…0] =”011” to “111”.

$$R_n = 1.164(Y_{2n-1} - 16) + 1.596(C_{Rn} - 128)$$
$$G_n = 1.164(Y_{2n-1} - 16) - 0.813(C_{Rn} - 128) - 0.392(C_{Bn} - 128)$$
$$B_n = 1.164(Y_{2n-1} - 16) + 2.017(C_{Bn})$$

Equation1: YUV to RGB conversion formula (PFON=0)

$$R_n = 1.164((Y_{2n-1} + Y_{2n})/2 - 16) + 1.596(C_{Rn} - 128)$$
$$G_n = 1.164((Y_{2n-1} + Y_{2n})/2 - 16) - 0.813(C_{Rn} - 128) - 0.392(C_{Bn} - 128)$$
$$B_n = 1.164((Y_{2n-1} + Y_{2n})/2 - 16) + 2.017(C_{Bn})$$

Equation2: YUV to RGB conversion formula (PFON=1)

N=1…320 for 24.54 MHz, n=1…360 for 27MHz

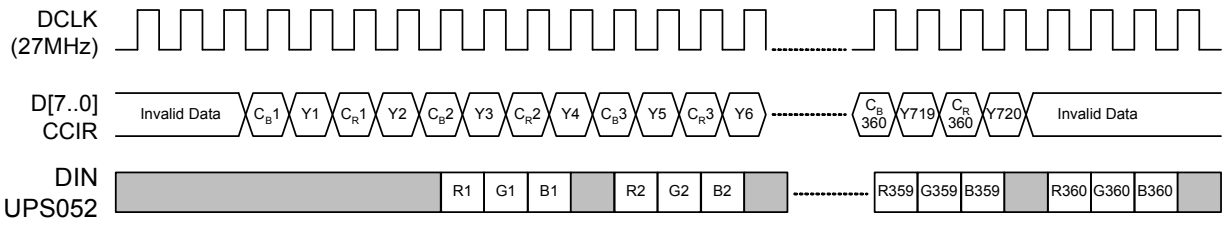

Figure 13: CCIR decoding path

ALL RIGHTS STRICTLY RESERVED. ANY PORTION OF THIS PRPER SHALL NOT BE REPRODUCED, COPIED, OR TRANSFORMED TO ANY OTHER FORMS WITHOUT PERMISSION FROM AU OPTRONICS CORP.