( V ) Preliminary Specifications
(  ) Final Specifications

| | |
|---|---|
| **Module** | **10.1”(10.05”) HD 16:9 Color TFT-LCD with LED Backlight design** |
| **Model Name** | B101XTN01.0 (H/W:0A) |
| **Note ( )** | ***LED Backlight with driving circuit design*** |

| | | | |
|---|---|---|---|
| **Customer** | **Date** | **Approved by** | **Date** |
| | MM/DD/YYYY | Trista Jiang | 06/20/2012 |
| **Checked & Approved by** | **Date** | **Prepared by** | **Date** |
| | MM/DD/YYYY | Frank Wang | 06/20/2012 |
| Note: This Specification is subject to change without notice. | | **NBBU Marketing Division AU Optronics corporation** | |

# Contents

# Record of Revision

| Version and Date | Page | Old description | New Description | Remark |
|---|---|---|---|---|
| 0.1 2012/02/19 | All | First Edition for Customer | | |
| 0.2 2012/3/29 | 18 | Update Pin Assignment | | |
| 0.3 2012/4/16 | 18 | Update Connector Description | | |
| 0.4 2012/6/20 | 24, 25 | Update LCM Outline Dimension front & back view | | |
| 0.5 2012/09/17 | 26 | | Updated carton label | |
| | | | | |
| | | | | |

## 1. Handling Precautions

1) Since front polarizer is easily damaged, pay attention not to scratch it.
2) Be sure to turn off power supply when inserting or disconnecting from input connector.
3) Wipe off water drop immediately. Long contact with water may cause discoloration or spots.
4) When the panel surface is soiled, wipe it with absorbent cotton or other soft cloth.
5) Since the panel is made of glass, it may break or crack if dropped or bumped on hard surface.
6) Since CMOS LSI is used in this module, take care of static electricity and insure human earth when handling.
7) Do not open nor modify the Module Assembly.
8) Do not press the reflector sheet at the back of the module to any directions.
9) At the insertion or removal of the Signal Interface Connector, be sure not to rotate nor tilt the Interface Connector of the TFT Module.
11) After installation of the TFT Module into an enclosure (Notebook PC Bezel, for example), do not twist nor bend the TFT Module even momentary. At designing the enclosure, it should be taken into consideration that no bending/twisting forces are applied to the TFT Module from outside. Otherwise the TFT Module may be damaged.
12) Small amount of materials having no flammability grade is used in the LCD module. The LCD module should be supplied by power complied with requirements of Limited Power Source (IEC60950 or UL1950), or be applied exemption.
13) Disconnecting power supply before handling LCD modules, it can prevent electric shock, DO NOT TOUCH the electrode parts, cables, connectors and LED circuit part of TFT module that a LED light bar build in as a light source of back light unit. It can prevent electrostatic breakdown.

## 2. General Description

B101XTN01.0 is a Color Active Matrix Liquid Crystal Display composed of a TFT LCD panel, a driver circuit, and LED backlight system. The screen format is intended to support the 16:9 HD, 1366(H) x768(V) screen and 262k colors (RGB 6-bits data driver) with LED backlight driving circuit. All input signals are LVDS interface compatible.

B101XTN01.0 is designed for a display unit of notebook style personal computer and industrial machine.

## 2.1 General Specification

The following items are characteristics summary on the table at 25 ℃ condition:

| Items | Unit | Specifications | | | |
|---|---|---|---|---|---|
| Screen Diagonal | [mm] | 255.28 | | | |
| Active Area | [mm] | 222.52 x 125.11 | | | |
| Pixels H x V | | 1366x3(RGB) x 768 | | | |
| Pixel Pitch | [mm] | 0.1629X0.1629 | | | |
| Pixel Format | | R.G.B. Vertical Stripe | | | |
| Display Mode | | Normally White | | | |
| White Luminance ($I_{LED}$=20mA)<br>**(Note: ILED is LED current)** | [cd/m$^2$] | 200 typ. (5 points average) | | | |
| Luminance Uniformity | | 1.25 (5 points average) | | | |
| Contrast Ratio | | 500 typ | | | |
| Response Time | [ms] | 8 typ / 16 Max | | | |
| Nominal Input Voltage VDD | [Volt] | +3.3 typ. | | | |
| Power Consumption | [Watt] | 2.6 max. (Include Logic and Blu power) | | | |
| Weight | [Grams] | 170 max. | | | |
| Physical Size<br>**Include bracket** | [mm] | | Min. | Typ. | Max. |
| | | Length | 243.0 | 243.5 | 244.0 |
| | | Width | 146.5 | 147.0 | 147.5 |
| | | Thickness | - | - | 3.6 |
| Electrical Interface | | 1 channel LVDS | | | |
| Glass Thickness | [mm] | 0.5 | | | |
| Surface Treatment | | Glare, Hardness 3H,<br>Low Reflection | | | |
| Support Color | | 262K colors ( RGB 6-bit ) | | | |

| | | |
|---|---|---|
| Temperature Range<br>Operating<br>Storage (Non-Operating) | <br>[°C]<br>[°C] | <br>0 to +50<br>-20 to +60 |
| RoHS Compliance | | RoHS Compliance |

## 2.2 Optical Characteristics

The optical characteristics are measured under stable conditions at 25℃ (Room Temperature) :

| Item | | Symbol | Conditions | Min. | Typ. | Max. | Unit | Note |
|---|---|---|---|---|---|---|---|---|
| White Luminance $I_{LED}$=20mA | | | 5 points average | - | 200 | - | cd/m² | 1, 4, 5. |
| Viewing Angle | | $\theta_R$ | Horizontal (Right) CR = 10 | 40 | 45 | - | degree | 4, 9 |
| | | $\theta_L$ | (Left) | 40 | 45 | - | | |
| | | $\phi_H$ | Vertical (Upper) CR = 10 | 10 | 15 | - | | |
| | | $\phi_L$ | (Lower) | 30 | 35 | - | | |
| Luminance Uniformity | | $\delta_{5P}$ | 5 Points | - | - | 1.25 | | 1, 3, 4 |
| Luminance Uniformity | | $\delta_{13P}$ | 13 Points | - | - | 1.60 | | 2, 3, 4 |
| Contrast Ratio | | CR | | 400 | 500 | - | | 4, 6 |
| Cross talk | | % | | | | 4 | | 4, 7 |
| Response Time | | $T_{RT}$ | Rising + Falling | - | 8 | 16 | msec | 4, 8 |
| Color / Chromaticity Coodinates | Red | Rx | CIE 1931 | TBD | TBD | TBD | | 4 |
| | | Ry | | TBD | TBD | TBD | | |
| | Green | Gx | | TBD | TBD | TBD | | |
| | | Gy | | TBD | TBD | TBD | | |
| | Blue | Bx | | TBD | TBD | TBD | | |
| | | By | | TBD | TBD | TBD | | |
| | White | Wx | | 0.283 | 0.313 | 0.343 | | |
| | | Wy | | 0.299 | 0.329 | 0.359 | | |
| NTSC | | % | | - | 45 | - | | |

**Note 1**: 5 points position (Ref: Active area)

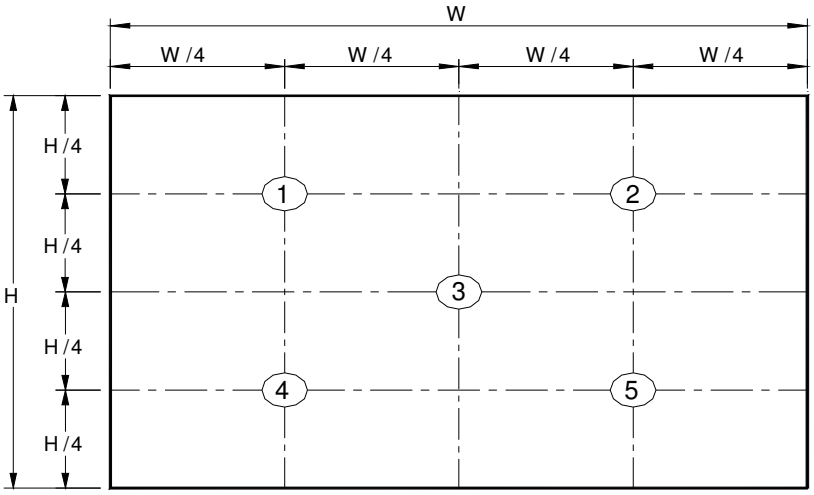


**Note 2**: 13 points position (Ref: Active area)

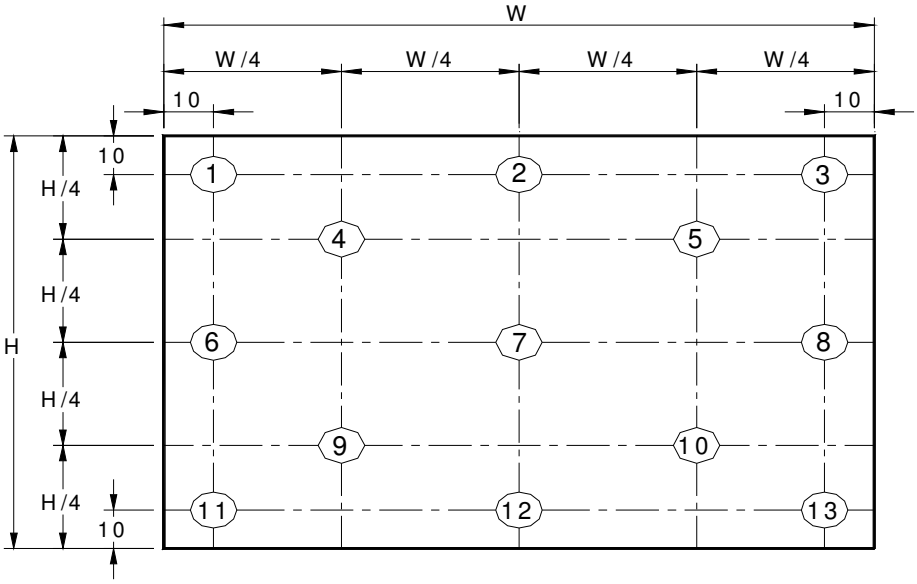


**Note 3**: The luminance uniformity of 5 or13 points is defined by dividing the maximum luminance values by the minimum test point luminance

$$\delta_{W5} = \frac{\text{Maximum Brightness of five points}}{\text{Minimum Brightness of five points}}$$

$$\delta_{W13} = \frac{\text{Maximum Brightness of thirteen points}}{\text{Minimum Brightness of thirteen points}}$$

**Note 4**: Measurement method

The LCD module should be stabilized at given temperature for 30 minutes to avoid abrupt temperature change during measuring. In order to stabilize the luminance, the measurement should be executed after lighting Backlight for 30 minutes in a stable, windless and dark room, and it should be measured in the center of screen.

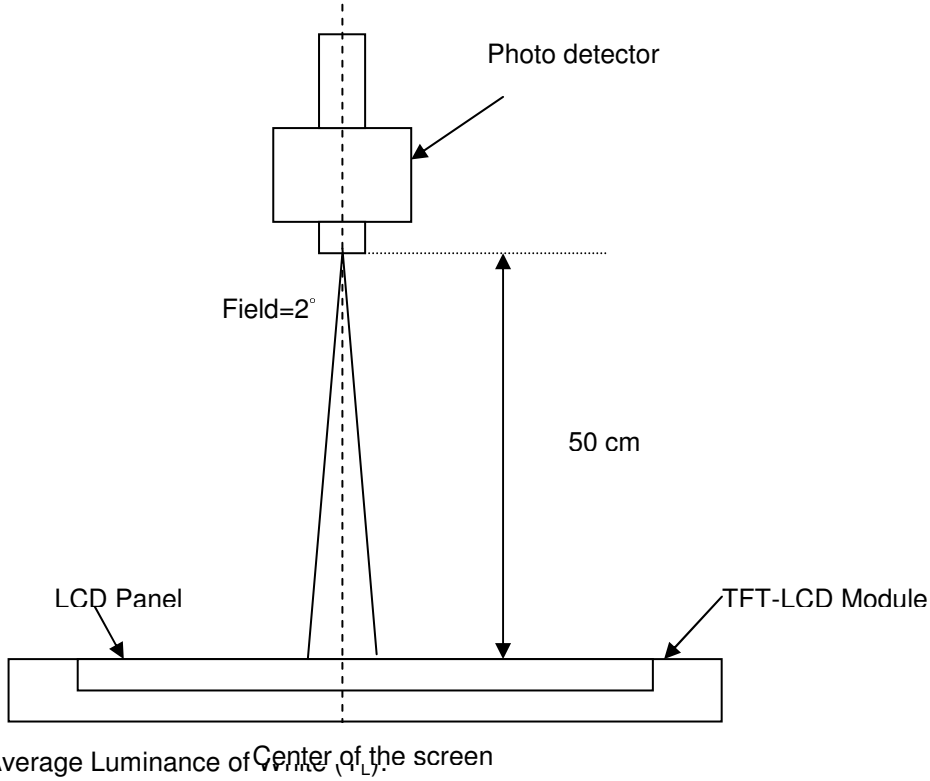


**Note 5**： Definition of Average Luminance of White ($Y_L$):

Measure the luminance of gray level 63 at 5 points，$Y_L$ = [L (1)+ L (2)+ L (3)+ L (4)+ L (5)] / 5

L (x) is corresponding to the luminance of the point X at Figure in Note (1).

**Note 6**： Definition of contrast ratio:

Contrast ratio is calculated with the following formula.

$$\text{Contrast ratio (CR)} = \frac{\text{Brightness on the “White” state}}{\text{Brightness on the “Black” state}}$$

**Note 7**： Definition of Cross Talk (CT)

$CT = | Y_B - Y_A | / Y_A \times 100$ (%)

Where

$Y_A$ = Luminance of measured location without gray level 0 pattern (cd/m2)

$Y_B$ = Luminance of measured location with gray level 0 pattern (cd/m2)

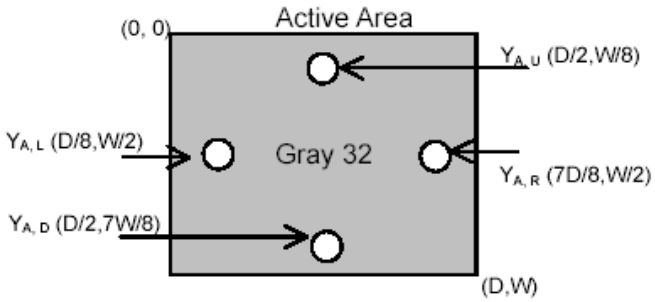


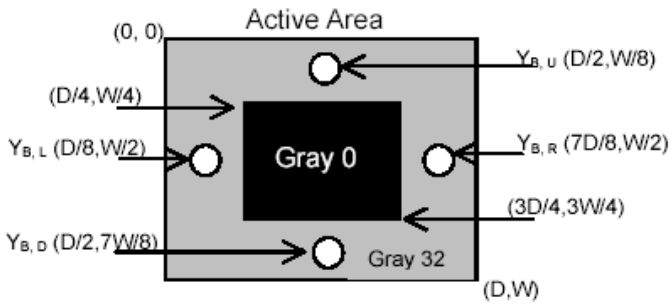


**Note 8**: Definition of response time:

The output signals of BM-7 or equivalent are measured when the input signals are changed from “Black” to “White” (falling time) and from “White” to “Black” (rising time), respectively. The response time interval between the 10% and 90% of amplitudes. Refer to figure as below.

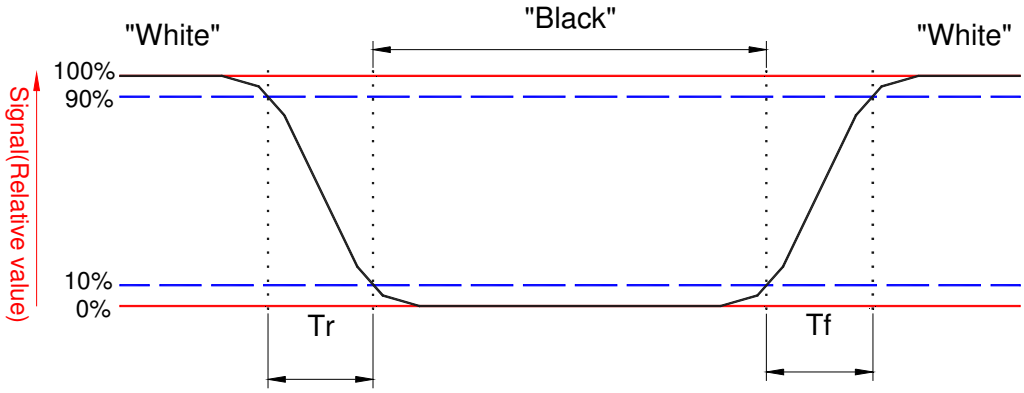

**Note 9**. Definition of viewing angle

Viewing angle is the measurement of contrast ratio ≧10, at the screen center, over a 180° horizontal and 180° vertical range (off-normal viewing angles). The 180° viewing angle range is broken down as follows; 90° (θ) horizontal left and right and 90° (Φ) vertical, high (up) and low (down). The measurement direction is typically perpendicular to the display surface with the screen rotated about its center to develop the desired measurement viewing angle.

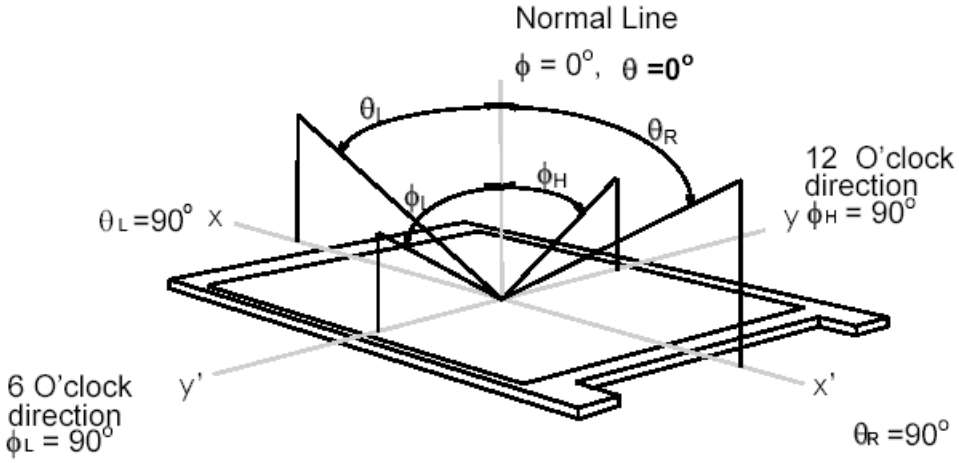

## 3. Functional Block Diagram

The following diagram shows the functional block of the 10.1 inches wide Color TFT/LCD 40 Pin one channel Module

**TBD**

4. Absolute Maximum Ratings

An absolute maximum rating of the module is as following:

## 4.1 Absolute Ratings of TFT LCD Module

| Item | Symbol | Min | Max | Unit | Conditions |
|---|---|---|---|---|---|
| Logic/LCD Drive Voltage | Vin | TBD | TBD | [Volt] | Note 1,2 |

## 4.2 Absolute Ratings of Environment

| Item | Symbol | Min | Max | Unit | Conditions |
|---|---|---|---|---|---|
| Operating Temperature | TOP | 0 | +50 | [°C] | Note 4 |
| Operation Humidity | HOP | 5 | 95 | [%RH] | Note 4 |
| Storage Temperature | TST | -20 | +60 | [°C] | Note 4 |
| Storage Humidity | HST | 5 | 95 | [%RH] | Note 4 |

Note 1: At Ta (25℃ )

Note 2: Permanent damage to the device may occur if exceed maximum values

Note 3: LED specification refer to section 5.2

Note 4: For quality performance, please refer to AUO IIS (Incoming Inspection Standard).

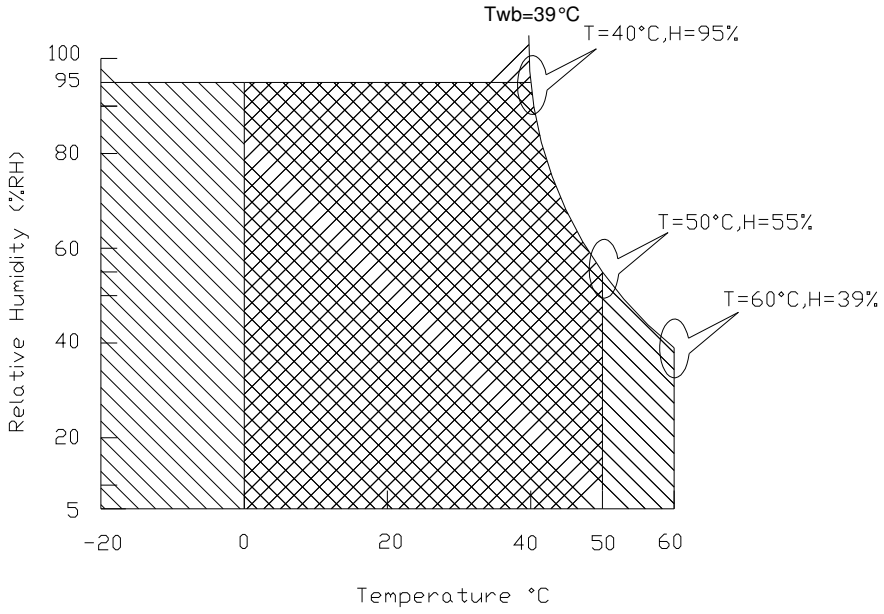


Operating Range Storage Range +

# 5. Electrical Characteristics

## 5.1 TFT LCD Module

### 5.1.1 Power Specification

Input power specifications are as follows;

The power specification are measured under 25℃ and frame frenquency under 60Hz

| Symble | Parameter | Min | Typ | Max | Units | Note |
|---|---|---|---|---|---|---|
| VDD | Logic/LCD Drive Voltage | 3.0 | 3.3 | 3.6 | [Volt] | |
| PDD | VDD Power | - | - | 0.8 | [Watt] | Note 1 |
| IDD | IDD Current | - | - | 606 | [mA] | Note 1 |
| IRush | Inrush Current | - | - | 2000 | [mA] | Note 2 |
| VDDrp | Allowable Logic/LCD Drive Ripple Voltage | - | - | 100 | [mV] p-p | |

Note 1 : Maximum Measurement Condition：Black Pattern at 3.3V driving voltage. ($P_{max}=V_{3.3} \times I_{black}$)

Typical Measurement Condition : Mosaic Pattern

Note 2：Measure Condition

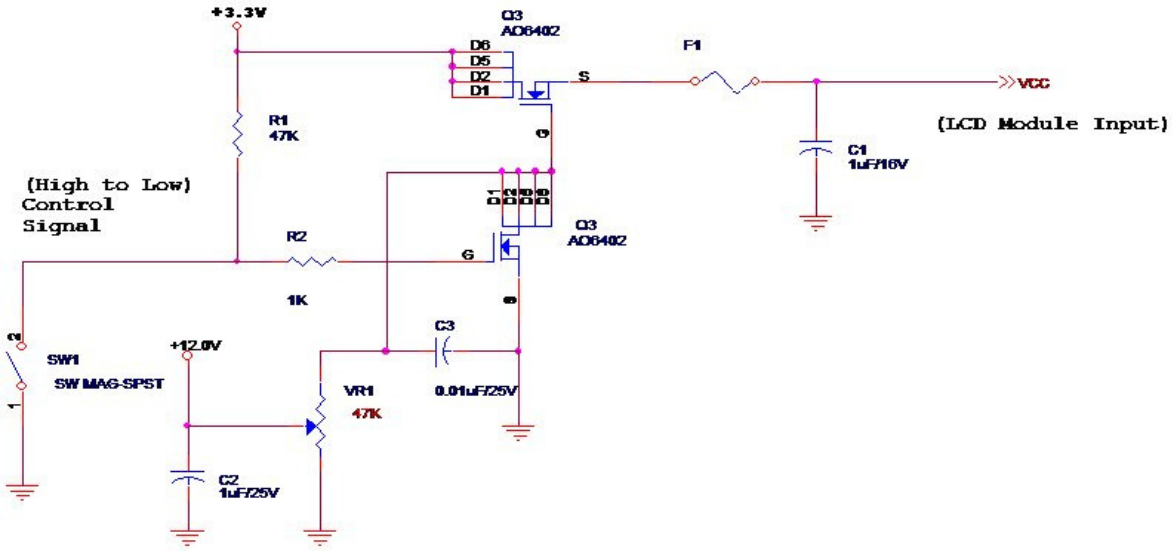


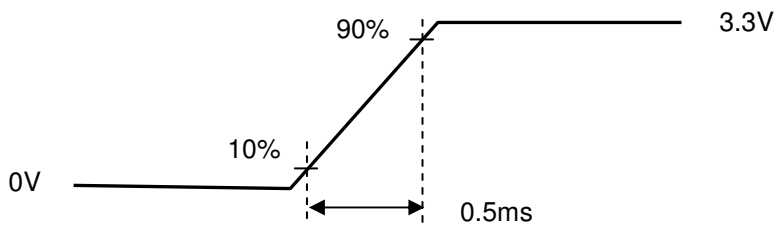


**Vin rising time**

### 5.1.2 Signal Electrical Characteristics

Input signals shall be low or High-impedance state when VDD is off.

Signal electrical characteristics are as follows;

| Parameter | Condition | Min | Max | Unit |
|---|---|---|---|---|
| $V_{TH}$ | Differential Input High Threshold (Vcm=+1.2V) | - | 100 | [mV] |
| $V_{TL}$ | Differential Input Low Threshold (Vcm=+1.2V) | -100 | - | [mV] |
| $\|V_{ID}\|$ | Differential Input Voltage | 100 | 600 | [mV] |
| $V_{CM}$ | Differential Input Common Mode Voltage | 1.125 | 1.375 | [V] |

Note: LVDS Signal Waveform

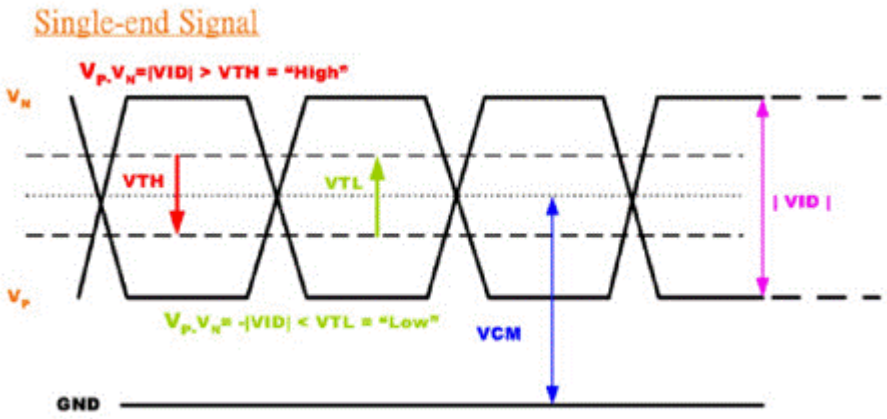

## 5.2 Backlight Unit

### 5.2.1 LED characteristics

| Parameter | Symbol | Min | Typ | Max | Units | Condition |
|---|---|---|---|---|---|---|
| Backlight Power Consumption | PLED | - | - | 1.8 | [Watt] | (Ta=25℃), Note 1 Vin =12V |
| LED Life-Time | N/A | 15,000 | - | - | Hour | (Ta=25℃), Note 2 $I_F$=20 mA |

**Note 1:** Calculator value for reference $P_{LED}$ = VF (Normal Distribution) * IF (Normal Distribution) / Efficiency

**Note 2:** The LED life-time define as the estimated time to 50% degradation of initial luminous.

**Note 3:** LED input Current 0.254A typ / LED Forward Current 20mA per string, total 80mA / LED Forward Voltage 25.6V typ / LED Array 4parallel * 8series

**Note 4:** LED driver IC Vendor – AAT (Advanced Analog Technology,Inc.)

### 5.2.2 Backlight input signal characteristics

| Parameter | Symbol | Min | Typ | Max | Units | Remark |
|---|---|---|---|---|---|---|
| LED Power Supply | VLED | 6.0 | 12.0 | 21.0 | [Volt] | Define as Connector Interface (Ta=25℃) |
| LED Enable Input High Level | VLED_EN | 2.5 | - | 5.5 | [Volt] | |
| LED Enable Input Low Level | | - | - | 0.5 | [Volt] | |
| PWM Logic Input High Level | VPWM_EN | 2.5 | - | 5.5 | [Volt] | |
| PWM Logic Input Low Level | | - | - | 0.5 | [Volt] | |
| PWM Input Frequency | FPWM | 200 | 1K | 10K | Hz | |
| PWM Duty Ratio | Duty | 5 | -- | 100 | % | |

**Note 1 :** Recommend system pull up/down resistor no bigger than 10kohm

# 6. Signal Interface Characteristic

## 6.1 Pixel Format Image

Following figure shows the relationship of the input signals and LCD pixel format.

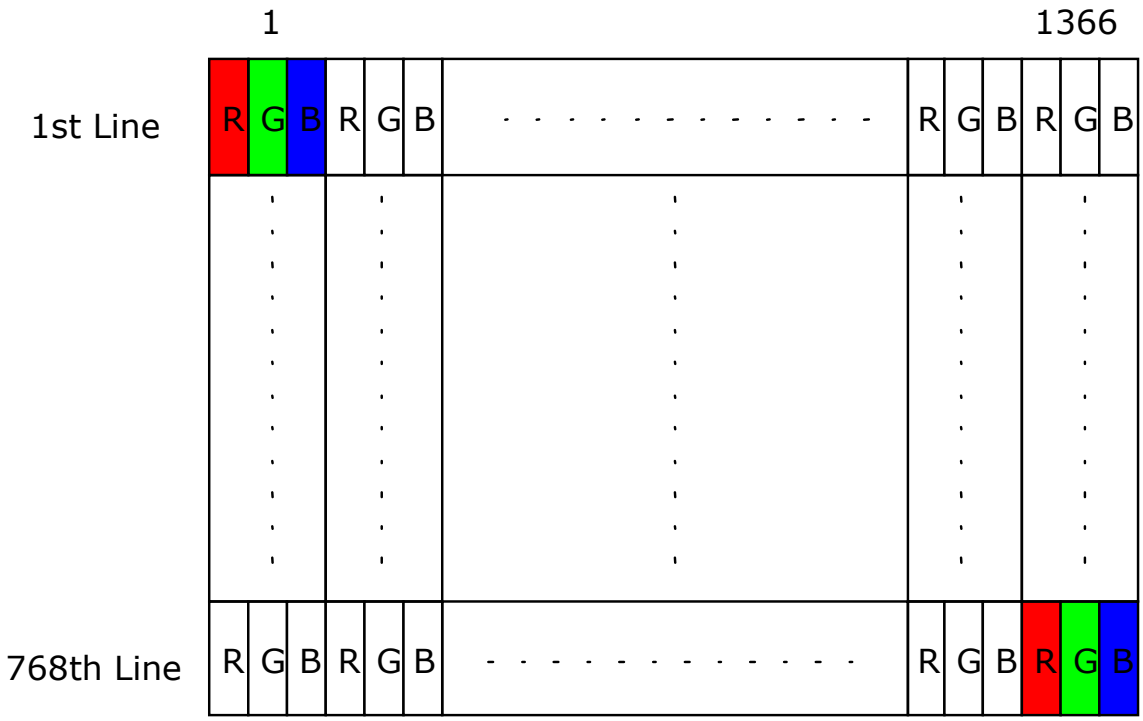

## 6.2 The Input Data Format

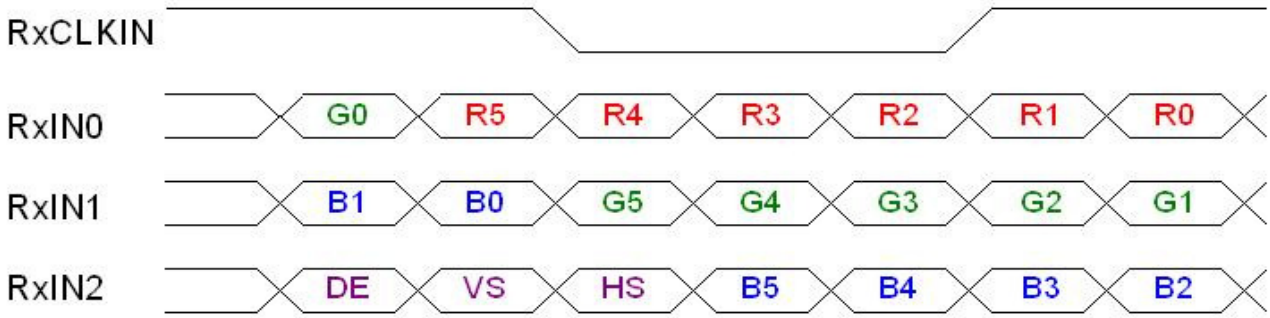


| Signal Name | Description | |
|---|---|---|
| R5<br>R4<br>R3<br>R2<br>R1<br>R0 | Red Data 5 (MSB)<br>Red Data 4<br>Red Data 3<br>Red Data 2<br>Red Data 1<br>Red Data 0 (LSB)<br><br>Red-pixel Data | Red-pixel Data<br>Each red pixel's brightness data consists of these 6 bits pixel data. |
| G5<br>G4<br>G3<br>G2<br>G1<br>G0 | Green Data 5 (MSB)<br>Green Data 4<br>Green Data 3<br>Green Data 2<br>Green Data 1<br>Green Data 0 (LSB)<br><br>Green-pixel Data | Green-pixel Data<br>Each green pixel's brightness data consists of these 6 bits pixel data. |
| B5<br>B4<br>B3<br>B2<br>B1<br>B0 | Blue Data 5 (MSB)<br>Blue Data 4<br>Blue Data 3<br>Blue Data 2<br>Blue Data 1<br>Blue Data 0 (LSB)<br><br>Blue-pixel Data | Blue-pixel Data<br>Each blue pixel's brightness data consists of these 6 bits pixel data. |
| RxCLKIN | Data Clock | The signal is used to strobe the pixel data and DE signals. All pixel data shall be valid at the falling edge when the DE signal is high. |
| DE | Display Timing | This signal is strobed at the falling edge of RxCLKIN. When the signal is high, the pixel data shall be valid to be displayed. |
| VS | Vertical Sync | The signal is synchronized to RxCLKIN . |
| HS | Horizontal Sync | The signal is synchronized to RxCLKIN . |

Note: Output signals from any system shall be low or High-impedance state when VDD is off.

## 6.3 Integration Interface Requirement

### 6.3.1 Connector Description

Physical interface is described as for the connector on module.

These connectors are capable of accommodating the following signals and will be following components.

| Connector Name / Designation | For Signal Connector |
|---|---|
| Manufacturer | STM |
| Type / Part Number | MSAK24025P40 |
| Mating Housing/Part Number | Mating of MSAK24025P40 |

### 6.3.2 Pin Assignment

LVDS is a differential signal technology for LCD interface and high speed data transfer device.

| Pin | Signal | Description |
|---|---|---|
| 1 | Reserved | Reserved, AUO will use this pin. |
| 2 | VDD | Power Supply, 3.3 V (typical) |
| 3 | VDD | Power Supply, 3.3 V (typical) |
| 4 | V EEDID | DDC 3.3V power |
| 5 | TEST | Panel Self Test |
| 6 | Clk EEDID | DDC Clock |
| 7 | DATA EEDID | DDC Data |
| 8 | Odd_Rin0- | - LVDS differential data input (R0-R5, G0) (odd pixels) |
| 9 | Odd_Rin0+ | + LVDS differential data input (R0-R5, G0) (odd pixels) |
| 10 | VSS | Ground – Shield |
| 11 | Odd_Rin1- | - LVDS differential data input (G1-G5, B0-B1) (odd pixels) |
| 12 | Odd_Rin1+ | + LVDS differential data input (G1-G5, B0-B1) (odd pixels) |
| 13 | VSS | Ground – Shield |
| 14 | Odd_Rin2- | - LVDS differential data input (B2-B5, HS, VS, DE) (odd pixels) |
| 15 | Odd_Rin2+ | + LVDS differential data input (B2-B5, HS, VS, DE) (odd pixels) |
| 16 | VSS | Ground – Shield |
| 17 | Odd_ClkIN- | - LVDS differential clock input (odd pixels) |
| 18 | Odd_ClkIN+ | + LVDS differential clock input (odd pixels) |
| 19 | VSS | Ground – Shield |
| 20 | Reserved | Reserved |
| 21 | Reserved | Reserved |
| 22 | VSS | Ground – Shield |
| 23 | Reserved | Reserved |

| | | |
|---|---|---|
| 24 | Reserved | Reserved |
| 25 | VSS | Ground – Shield |
| 26 | Reserved | Reserved |
| 27 | Reserved | Reserved |
| 28 | VSS | Ground – Shield |
| 29 | Reserved | Reserved |
| 30 | Reserved | Reserved |
| 31 | VSS_LED | Ground – LED |
| 32 | VSS_LED | Ground – LED |
| 33 | VSS_LED | Ground – LED |
| 34 | NC | No connection (Reserved) |
| 35 | PWM | System PWM Signal Input (+3.3V Swing) |
| 36 | LED_EN | LED enable pin (+3.3V Input) |
| 37 | Reserved | Reserved |
| 38 | VDDLED | LED Power Supply 7V – 21V |
| 39 | VDDLED | LED Power Supply 7V – 21V |
| 40 | VDDLED | LED Power Supply 7V – 21V |

**Note 1:** Start from right side

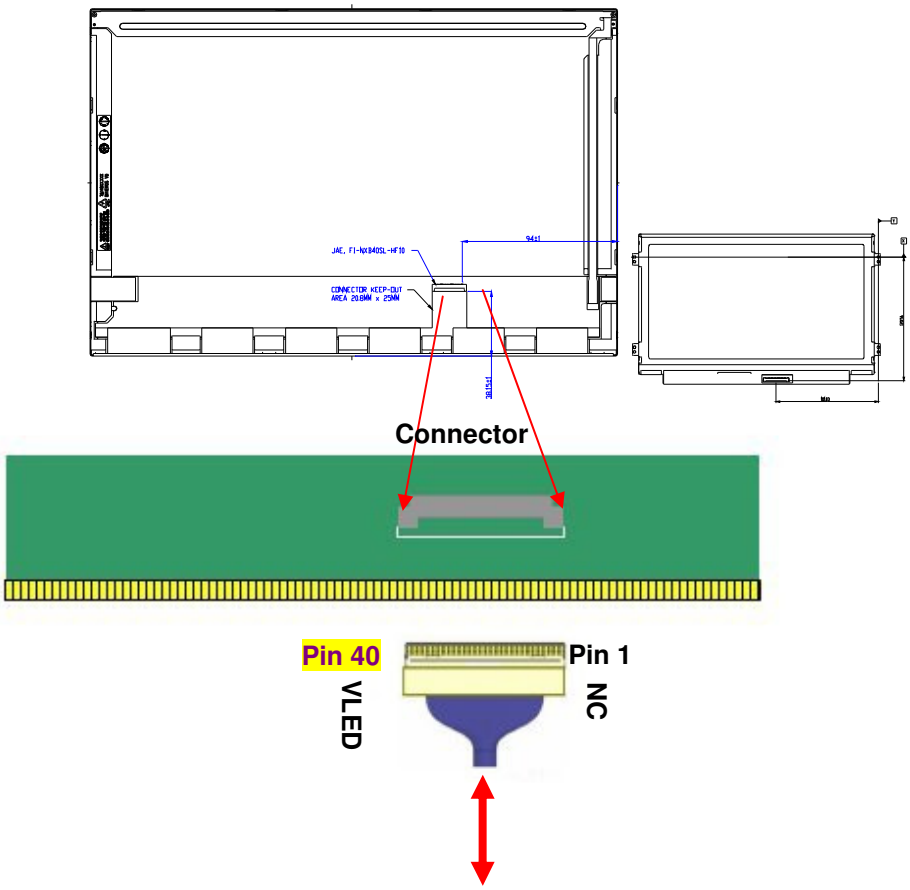


Note1: Input signals shall be low or High-impedance state when VDD is off.

## 6.4 Interface Timing

### 6.4.1 Timing Characteristics

Basically, interface timings should match the 1366x768 /60Hz manufacturing guide line timing.

| Parameter | | Symbol | Min. | Typ. | Max. | Unit |
|---|---|---|---|---|---|---|
| Frame Rate | | - | - | 60 | - | Hz |
| Clock frequency | | 1/ $T_{Clock}$ | 66.9 | 72 | 80 | MHz |
| Vertical Section | Period | $T_V$ | 788 | 824 | 768+A | $T_{Line}$ |
| | Active | $T_{VD}$ | 768 | | | |
| | Blanking | $T_{VB}$ | 20 | 56 | A | |
| Horizontal Section | Period | $T_H$ | 1416 | 1456 | 1366+B | $T_{Clock}$ |
| | Active | $T_{HD}$ | 1366 | | | |
| | Blanking | $T_{HB}$ | 50 | 90 | B | |

**Note 1 :** The above is as optimized setting
**Note 2 :** DE mode only
**Note 3 :** The maximum clock frequency = (1366+B)*(768+A)*60<80MHz
**Note 4 :** Clock frequency number is for reference, real setting value refer to EDID (Clock frequency TBD MHz)

| Parameter | | Symbol | Min. | Typ. | Max. | Unit |
|---|---|---|---|---|---|---|
| Frame Rate | | - | 40 | 60 | - | Hz |
| Clock frequency | | 1/ $T_{Clock}$ | 66.6 | 72 | 80 | MHz |
| Vertical Section | Period | $T_V$ | 1100 | 1130 | 1080+A | $T_{Line}$ |
| | Active | $T_{VD}$ | 1080 | | | |
| | Blanking | $T_{VB}$ | 20 | 50 | A | |
| Horizontal Section | Period | $T_H$ | 1010 | 1050 | 960+B | $T_{Clock}$ |
| | Active | $T_{HD}$ | 960 | | | |
| | Blanking | $T_{HB}$ | 50 | 90 | B | |

**Note 1 :** The above is as optimized setting
**Note 2 :** DE mode only
**Note 3 :** The maximum clock frequency = (960+B)*(1080+A)*60 < 80MHz
**Note 4 :** Clock frequency number is for reference, real setting value refer to EDID (Clock frequency TBD MHz)

### 6.4.2 Timing diagram

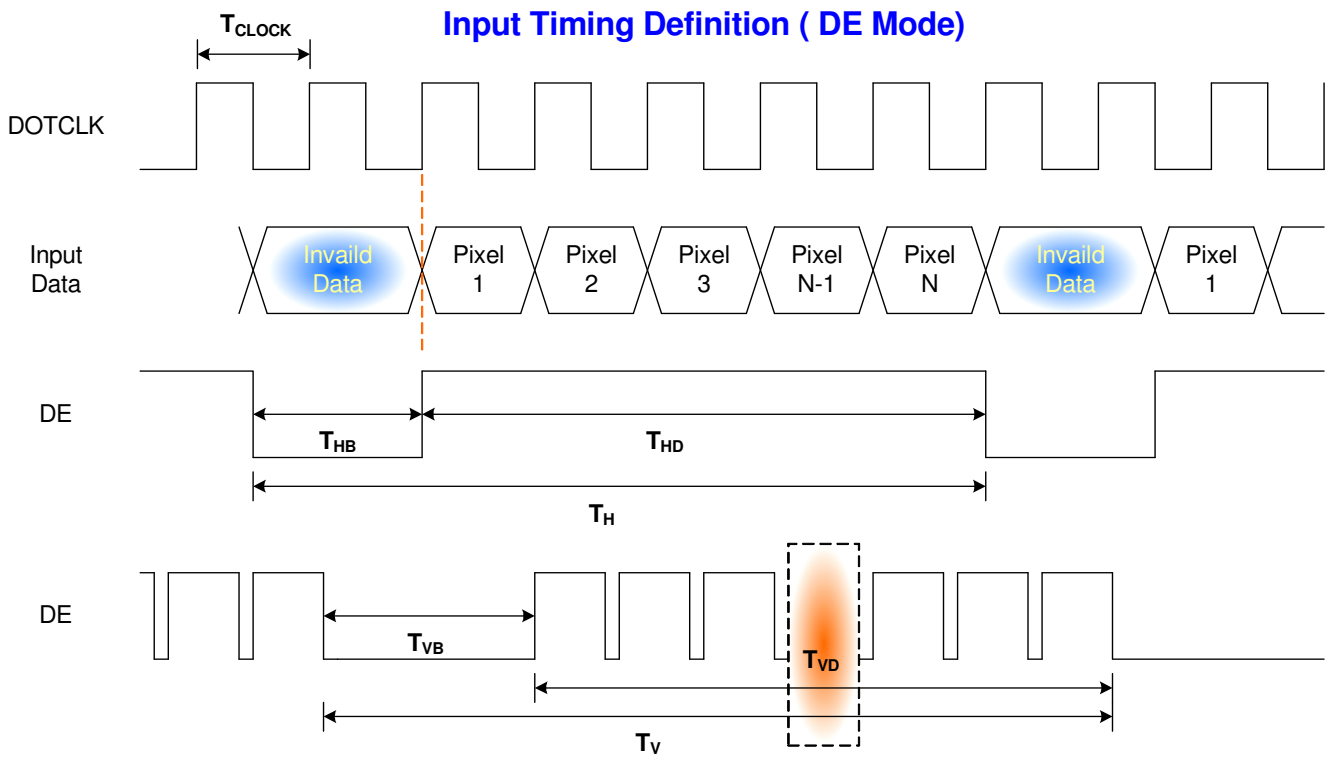

## 6.5 Power ON/OFF Sequence

Power on/off sequence is as follows. Interface signals and LED on/off sequence are also shown in the chart. Signals from any system shall be Hi-Z state or low level when VDD is off

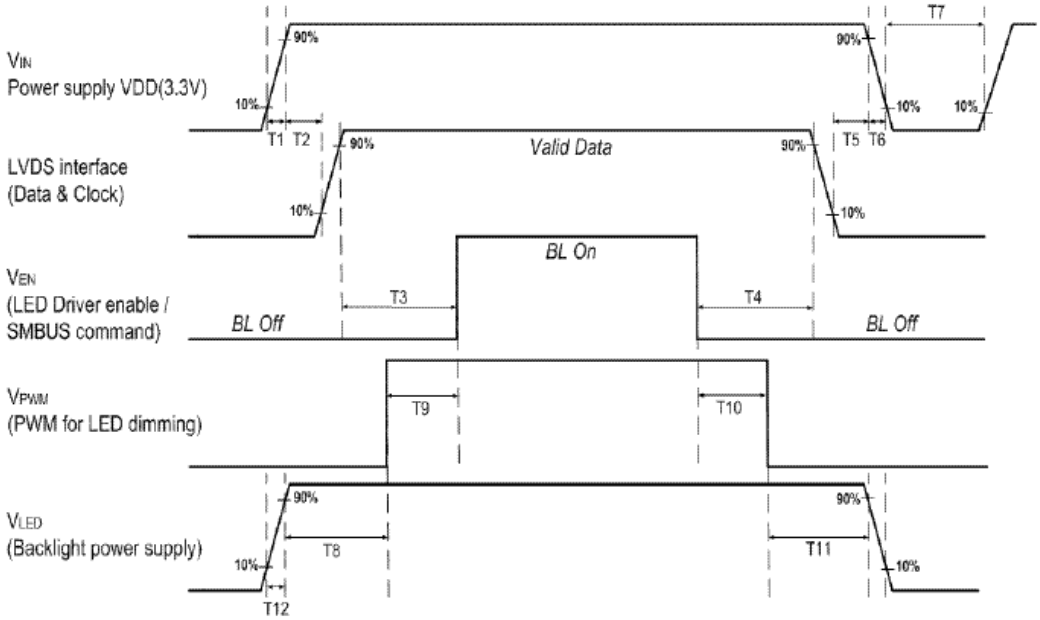


| | Min (ms) | Max (ms) |
|---|---|---|
| T1 | 0.5 | 10 |
| T2 | 0 | 50 |
| T3 | 200 | - |
| T4 | 200 | - |
| T5 | 0 | 50 |
| T6 | 0 | 10 |
| T7 | 500 | - |
| T8 | 10 | - |
| T9 | 10 | - |
| T10 | 10 | - |
| T11 | 10 | - |
| T12 | 0.5 | 10 |
| T13 | 1* | - |
| T14 | 1* | - |

Seamless change: T13/T14 = 5x$T_{PWM}$*

*$T_{PWM}$= 1/PWM Frequency

Note : When the adapter is hot plugged, the backlight power supply sequence is shown as below.

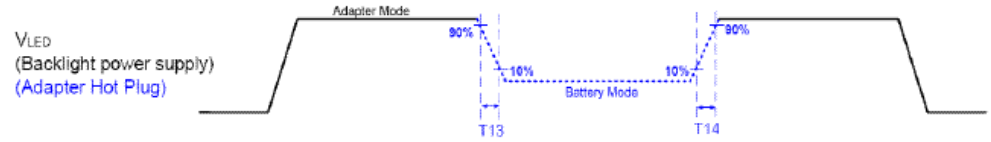


**Note 1 :** If T3<200ms, the display garbage may occur. (T3>200ms is recommended)

**Note 2 :** If T1 or T12<0.5ms, the inrush current may cause the damage of fuse. If T1 or T12<0.5ms, the inrush current $I^2t$ is under typical melt of fuse Spec, there is no mentioned problem.

**Note 3 :** T8,T9,T10,T11 value are recommended, T8,T9,T10,T11≧0 could be acceptable

# 7. Panel Reliability Test

## 7.1 Vibration Test

**Test Spec:**

- Test method: Non-Operation
- Acceleration: 1.5 G
- Frequency: 10 - 500Hz Random
- Sweep: 30 Minutes each Axis (X, Y, Z)

## 7.2 Shock Test

**Test Spec:**

- Test method: Non-Operation
- Acceleration: 220 G , Half sine wave
- Active time: 2 ms
- Pulse: X,Y,Z .one time for each side

## 7.3 Reliability Test

| Items | Required Condition | Note |
|---|---|---|
| Temperature Humidity Bias | Ta= 40℃, 90%RH, 300h | |
| High Temperature Operation | Ta= 50℃, Dry, 300h | |
| Low Temperature Operation | Ta= 0℃, 300h | |
| High Temperature Storage | Ta= 60℃, 35%RH, 300h | |
| Low Temperature Storage | Ta= -20℃, 50%RH, 250h | |
| Thermal Shock Test | Ta=-20℃to 60℃, Duration at 30 min, 100 cycles | |
| ESD | Contact : ±8 KV<br>Air : ±15 KV | Note 1 |

**Note1:** According to EN 61000-4-2 , ESD class B: Some performance degradation allowed. Self-recoverable. No data lost, No hardware failures.

**Remark:** MTBF (Excluding the LED): 30,000 hours with a confidence level 90%

# 8. Mechanical Characteristics

## 8.1 LCM Outline Dimension

### Front View

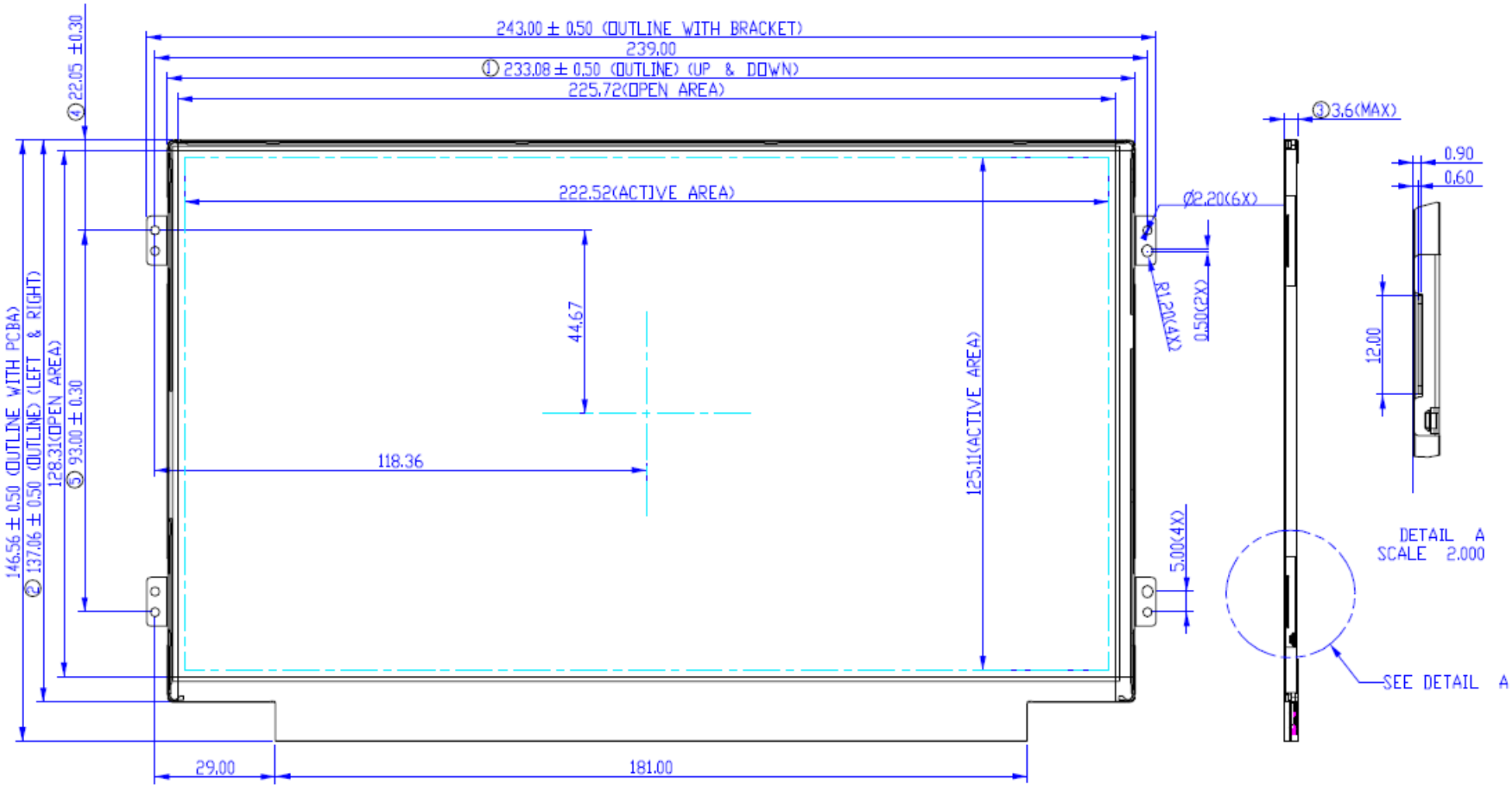

**Back View**

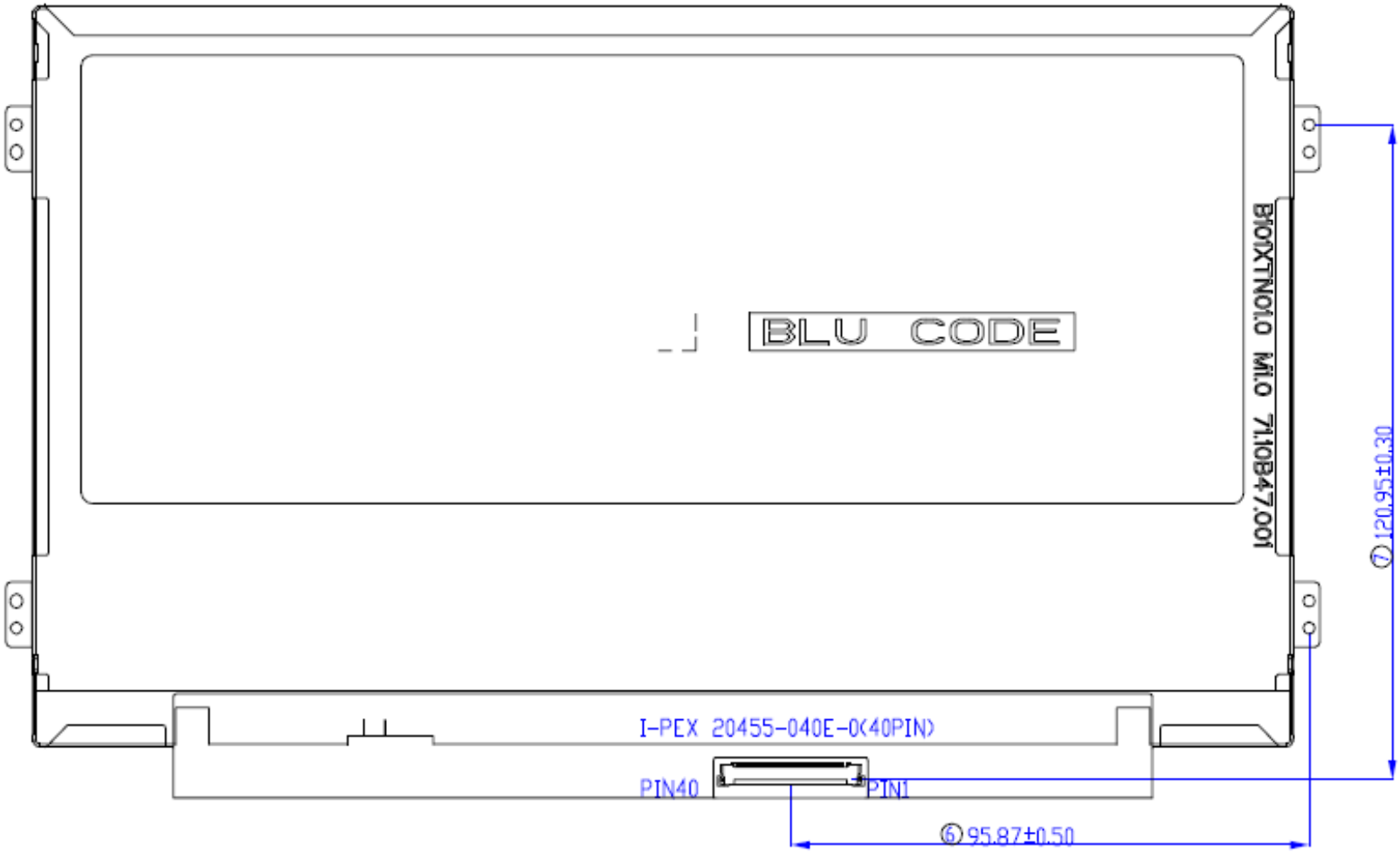
BLU CODE
B101XTN01.0 M10 7H0B470.001
I-PEX 20455-040E-0(40PIN)
PIN40
PIN1
⑦120.95±0.30
⑥95.87±0.50

## 9. Shipping and Package

### 9.1.1 Shipping Label Format

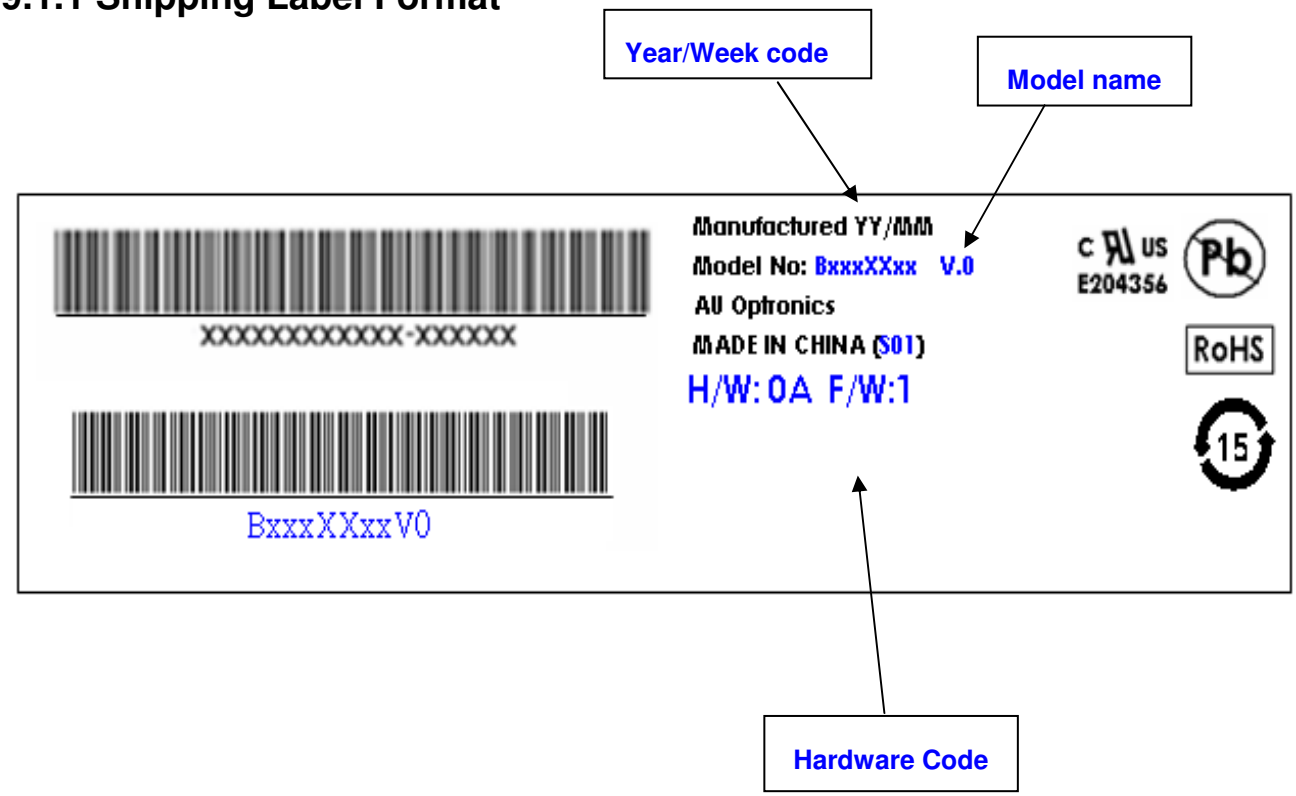


### 9.1.2 Carton Label Format

## 9.2 Carton Package

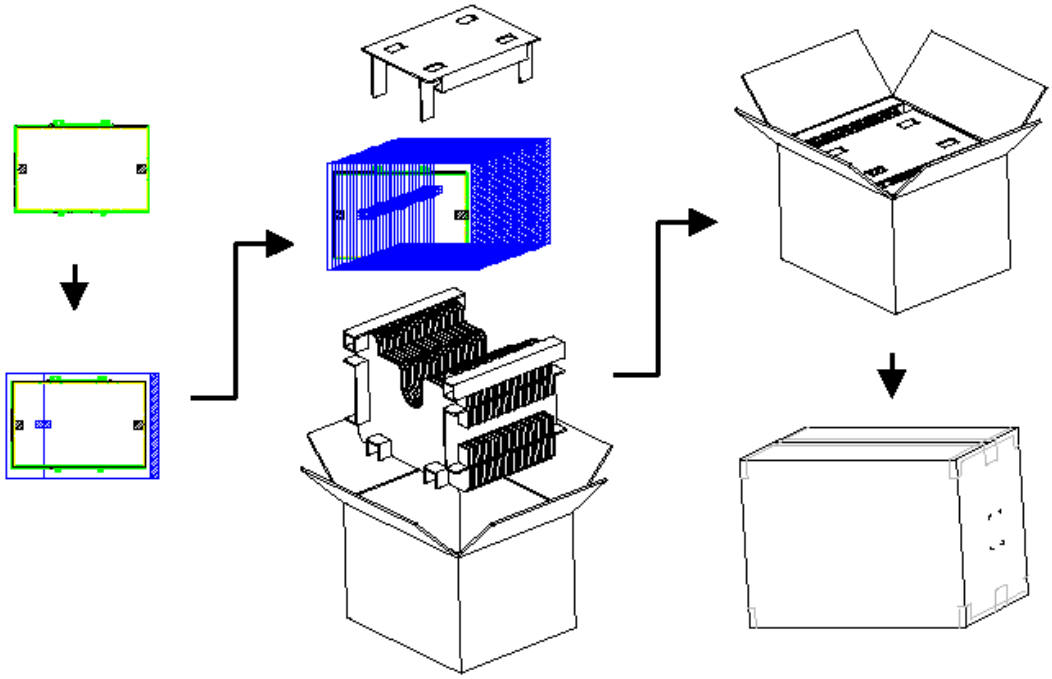

## 9.3 Shipping Package of Palletizing Sequence

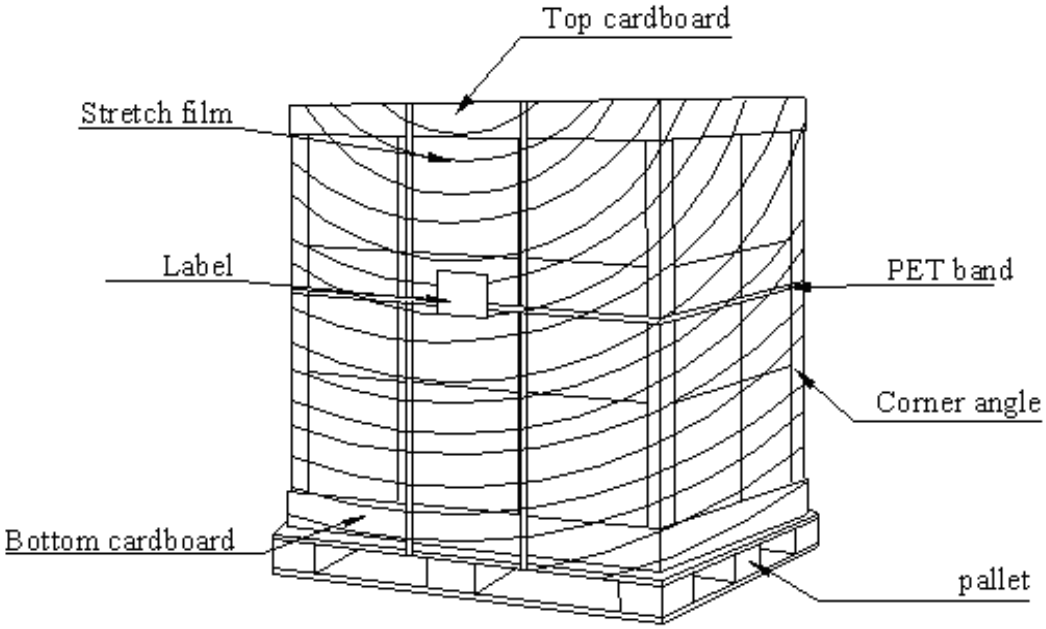


## 10. Appendix: EDID Description

TBD