AU OPTRONICS CORPORATION

Product Specification

12.1” WXGA Color TFT-LCD Module

Model Name: B121EW07 V1

Approved by	Prepared by
Kendra Wang	Pei-Ching Huang
NBBU Marketing Division / AU Optronics corporation	

Customer	Checked & Approved by

Product Specification

12.1” WXGA Color TFT-LCD Module
Model Name: B121EW07
V.1

(V) Preliminary Specifications
( ) Final Specifications

Note: This Specification is subject to change without notice.

Contents

1. Handling Precautions 5
2. General Description 6
2.1 General Specification 6
2.2 Optical Characteristics 7
3. Functional Block Diagram 11
4. Absolute Maximum Ratings 12
4.1 Absolute Ratings of TFT LCD Module 12
4.2 Absolute Ratings of Backlight Unit 12
4.3 Absolute Ratings of Environment 12
5. Electrical characteristics 13
5.1 TFT LCD Module 13
5.2 Backlight Unit 15
6. Signal Characteristic 16
6.1 Pixel Format Image 16
6.2 The input data format 17
6.3 Signal Description / PIN Assignment 18
6.4 Interface Timing 20
6.5 Power ON/OFF Sequence 21
7. Connector & Pin Assignment 22
7.1 TFT LCD Module 22
8. LED Driving Specificaton 22
8.1 Connector Description 23
8.2 PIN Assignment 23
9. Vibration and Shock Test 24
9.1 Vibration Test 24
9.2 Shock Test Spec: 24
10. Reliability 25
11. Mechanical Characteristics 26
11.1 LCM Outline Dimension 26
11.2 Screw Hole Depth and Center Position 28
12. Shipping and Package 29
12.1 Shipping Label Format 29
12.2. Carton package 30
12.3 Shipping package of palletizing sequence 30
13. Appendix: EDID description 31

Record of Revision

Version and Date	Page	Old description	New Description	Remark
0.1 2007/06/22	All		First Edition for Customer	
0.2 2007/07/10	32		revise EDID for model name	
0.3 2007/08/14	5		Add item 13 in handing precautions	
	6		Update general specification	
	7		Update optical characteristic	
	11		Update functional block diagram	
	12		Update absolute maximum ratings	
	13		Add condition in Power Specification	
	15		Update backlight unit	
	19		Update signal description and PIN assignment drawing	
	23		Update PIN Assignment	
	25		Update reliability	
	26-28		Update mechanical characteristics drawing	
	29-30		Update shipping label format and carton package	

1. Handling Precautions

1.1. Since front polarizer is easily damaged, pay attention not to scratch it.
1.2. Be sure to turn off power supply when inserting or disconnecting from input connector.
1.3. Wipe off water drop immediately. Long contact with water may cause discoloration or spots.
1.4. When the panel surface is soiled, wipe it with absorbent cotton or other soft cloth.
1.5. Since the panel is made of glass, it may break or crack if dropped or bumped on hard surface.
1.6. Since CMOS LSI is used in this module, take care of static electricity and insure human earth when handling.
1.7. Do not open nor modify the Module Assembly.
1.8. Do not press the reflector sheet at the back of the module to any directions.
1.9. In case if a Module has to be put back into the packing container slot after once it was taken out from the container, do not press the center of the LED Reflector edge. Instead, press at the far ends of the LED Reflector edge softly. Otherwise the TFT Module may be damaged.
1.10. At the insertion or removal of the Signal Interface Connector, be sure not to rotate nor tilt the Interface Connector of the TFT Module.
1.11. After installation of the TFT Module into an enclosure (Notebook PC Bezel, for example), do not twist nor bend the TFT Module even momentary. At designing the enclosure, it should be taken into consideration that no bending/twisting forces are applied to the TFT Module from outside. Otherwise the TFT Module may be damaged.
1.12. Small amount of materials having no flammability grade is used in the LCD module. The LCD module should be supplied by power complied with requirements of Limited Power Source (IEC60950 or UL1950), or be applied exemption,
1.13. Disconnecting power supply before handling LCD modules, it can prevent electric shock, DO NOT TOUCH the electrode parts, cables, connectors and LED circuit part of TFT module that a LED light bar build in as a light source of back light unit. High voltage is supplied to these parts when power turn on.

2. General Description

B121EW07 V1 is a Color Active Matrix Liquid Crystal Display composed of a TFT LCD panel, a driver circuit, and LED backlight system. The screen format is intended to support the WXGA (1280(H) x 800(V)) screen and 262k colors (RGB 6-bits data driver) with LED backlight driving circuit. All input signals are LVDS interface compatible.

B121EW07 V1 is designed for a display unit of notebook style personal computer and industrial machine.

2.1. General Specification

The following items are characteristics summary on the table under 25 ℃ condition:

Items	Unit	Specifications
Screen Diagonal	[mm]	307.9 (12.1W")
Active Area	[mm]	261.12(H) X 163.2(V)
Pixels H x V		1280x3(RGB) x 800
Pixel Pitch	[mm]	0.204X0.204
Pixel Arrangement		R.G.B. Vertical Stripe
Display Mode		Normally White
White Luminance (I_{LED}=20mA) Note: I_{LED} is LED current	[cd/m^2]	200 typ. (5 points average) 170 min. (5 points average) (Note1)
Luminance Uniformity		1.25 max. (5 points)
Contrast Ratio		350 min, 400 typ.
Optical Rise Time/Fall Time	[msec]	25 typ. / 35 max.
Nominal Input Voltage VDD	[Volt]	+3.3 typ.
Typical Power Consumption	[Watt]	4.5W max. (@85% LED driver efficiency)
Weight (with LED driver board)	[Grams]	230g typ. 245g max
Physical Size	[mm]	275.82x 179.4 x 5.1 max.
Electrical Interface		1 channel LVDS
Surface Treatment		Glare

Support Color		Native 262K colors (RGB 6-bit data driver)
Temperature Range Operating Storage (Non-Operating)	 [°C] [°C]	 0 to +50 -20 to +60
RoHS Compliance		RoHS Compliance

2.2. Optical Characteristics

The optical characteristics are measured under stable conditions at 25℃ (Room Temperature):

Item	Unit	Conditions	Min.	Typ.	Max.	Note
White Luminance LED 20.0mA	[cd/m2]	5 points average	170	200	-	1,2,3
Viewing Angle	[degree] [degree]	Horizontal (Right) CR = 10 (Left)	- -	40 40	- -	2,7
	[degree] [degree]	Vertical (Upper) CR = 10 (Lower)	- -	20 40	- -	
Uniformity		5 Points	-	-	1.25	1
CR: Contrast Ratio			350	400	-	6
Cross talk	%		-	-	4	4
Response Time	[msec]	Raising + Falling	-	25	35	
Color / Chromaticity Coordinates (CIE 1931)		Red x	0.530	0.580	0.630	2,7
		Red y	0.280	0.330	0.380	
		Green x	0.275	0.325	0.375	
		Green y	0.515	0.565	0.615	
		Blue x	0.100	0.150	0.200	
		Blue y	0.070	0.120	0.170	
		White x	0.263	0.313	0.363	
		White y	0.279	0.329	0.379	

Note 1: 5 points position (Display area: 261.12mm x 163.2mm)

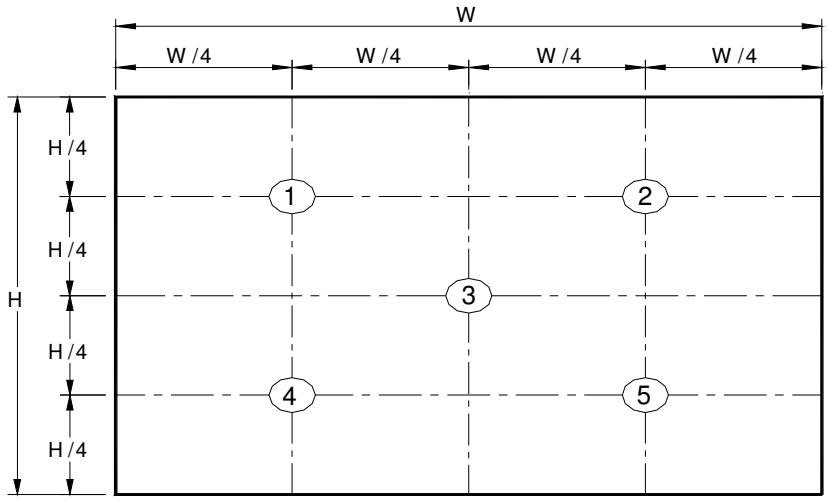

Note 2: The luminance uniformity of 5 and 13 points is defined by dividing the maximum luminance values by the minimum test point luminance

$$\delta_{W5} = \frac{\text{Maximum Brightness of five points}}{\text{Minimum Brightness of five points}}$$

$$\delta_{W13} = \frac{\text{Maximum Brightness of thirteen points}}{\text{Minimum Brightness of thirteen points}}$$

Note 3: Measurement method

The LCD module should be stabilized at given temperature for 30 minutes to avoid abrupt temperature change during measuring. In order to stabilize the luminance, the measurement should be executed after lighting Backlight for 30 minutes in a stable, windless and dark room.

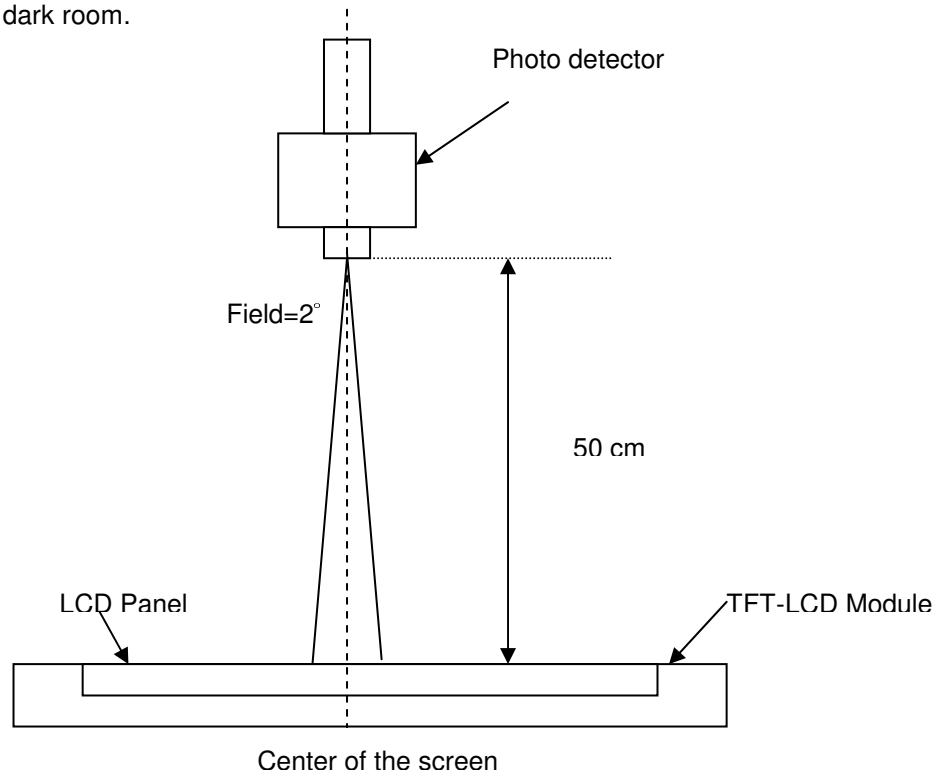

Note 4: Definition of Cross Talk (CT)

$CT = | Y_B - Y_A | / Y_A \times 100$ (%)

Where

Y_A = Luminance of measured location without gray level 0 pattern (cd/m2)

Y_B = Luminance of measured location with gray level 0 pattern (cd/m2)

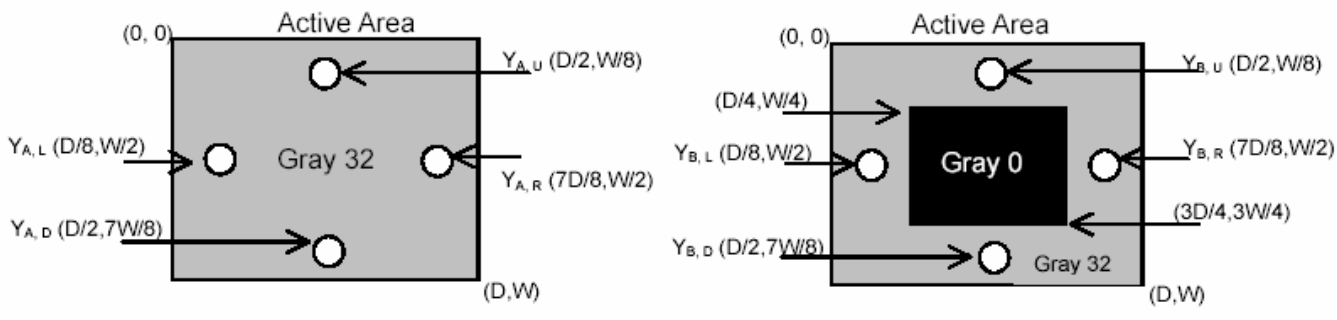

Note 5: Definition of response time:

The output signals of BM-7 or equivalent are measured when the input signals are changed from “Black” to “White” (falling time) and from “White” to “Black” (rising time), respectively. The response time interval between the 10% and 90% of amplitudes. Refer to figure as below.

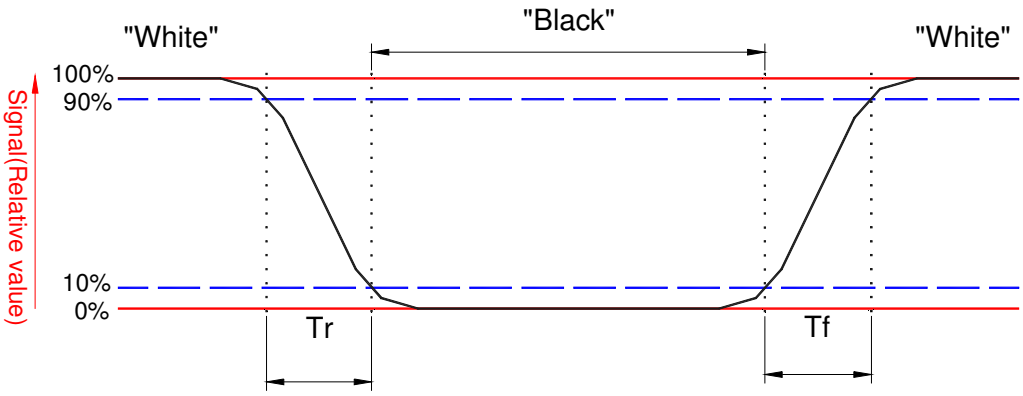

Note 6: Definition of viewing angle

Viewing angle is the measurement of contrast ratio ≧10, at the screen center, over a 180° horizontal and 180° vertical range (off-normal viewing angles). The 180° viewing angle range is broken down as follows; 90° (θ) horizontal left and right and 90° (Φ) vertical, high (up) and low (down). The measurement direction is typically perpendicular to the display surface with the screen rotated about its center to develop the desired measurement viewing angle.

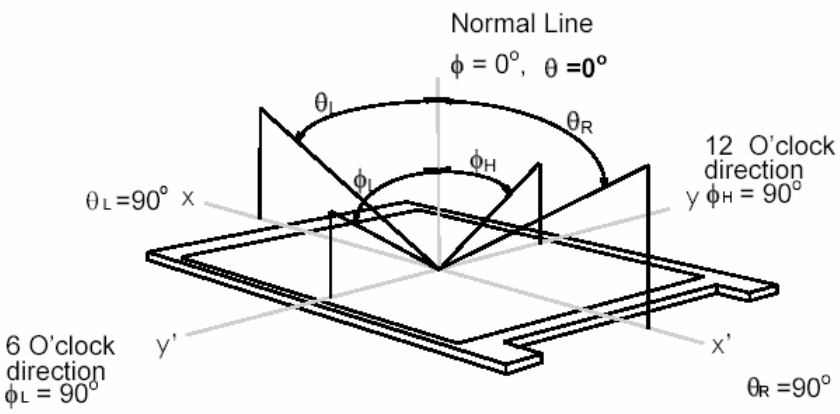

3. Functional Block Diagram

The following diagram shows the functional block of the 12.1 inches wide Color TFT/LCD Module:

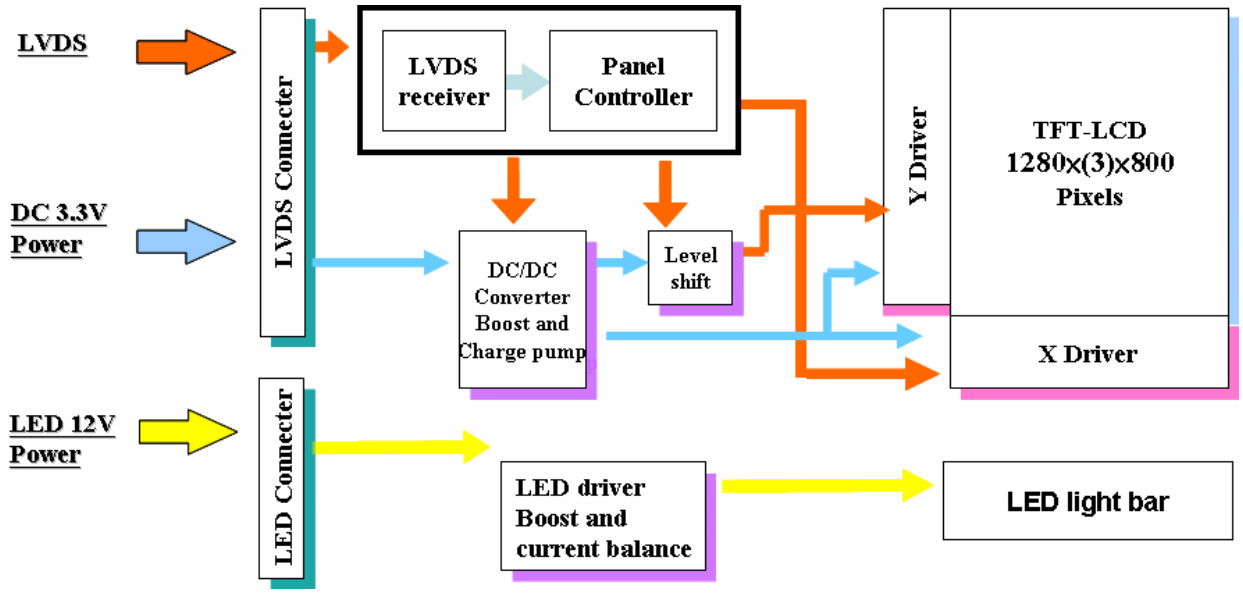

4. Absolute Maximum Ratings

Absolute maximum ratings of the module is as following:

4.1. Absolute Ratings of TFT LCD Module

Item	Symbol	Min	Max	Unit	Conditions
Logic/LCD Drive Voltage	Vin	2.8	3.8	[Volt]	Note 1, 2

4.2. Absolute Ratings of Backlight Unit

Item	Symbol	Min	Max	Unit	Conditions
LED Driving Voltage	V_{LED}	-	23.1	[Volt]	Note 1, 2, 3
LED Driving Current	I_{LED}	-	20	[mA]rms	Note 1, 2, 3

4.3. Absolute Ratings of Environment

Item	Symbol	Min	Max	Unit	Conditions
Operating Temperature	TOP	0	+50	[°C]	Note 4
Operation Humidity	HOP	10	90	[%RH]	Note 4
Storage Temperature	TST	-20	+60	[°C]	Note 4
Storage Humidity	HST	10	90	[%RH]	Note 4

Note 1: With in Ta (25℃)

Note 2: Permanent damage to the device may occur if exceed maximum values

Note 3: LED specification refer to section 5.2

Note 4: For quality performance, please refer to AUO IIS (Incoming Inspection Standard).

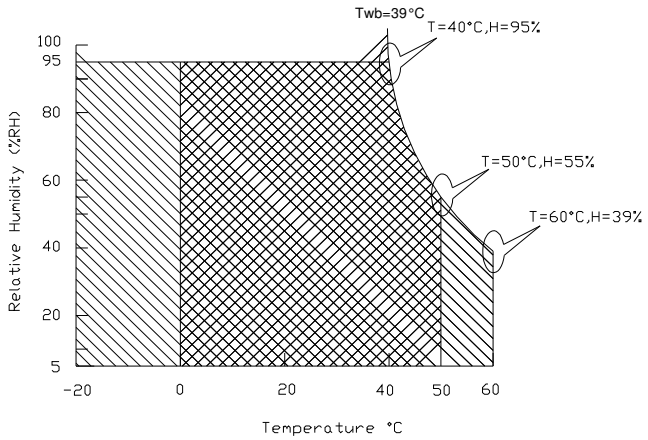

Operating Range Storage Range +

5. Electrical characteristics

5.1. TFT LCD Module

5.1.1. Power Specification

Input power specifications are as follows:

Symble	Parameter	Min	Typ	Max	Units	Condition
VDD	Logic/LCD Drive Voltage	3.0	3.3	3.6	[Volt]	Load Capacitance 20uF
PDD	VDD Power		1.0	1.2	[Watt]	Note 1, 2
IDD	IDD Current		300	300	mA	Note 1, 2
IRush	Inrush Current			1500	mA	Note 3
VDDrp	Allowable Logic/LCD Drive Ripple Voltage			100	[mV] p-p	

Note 1: Maximum Measurement Condition：Black Pattern

Note 2: Typical Measurement Condition: Mosaic Pattern

Note 3: Measurement conditions

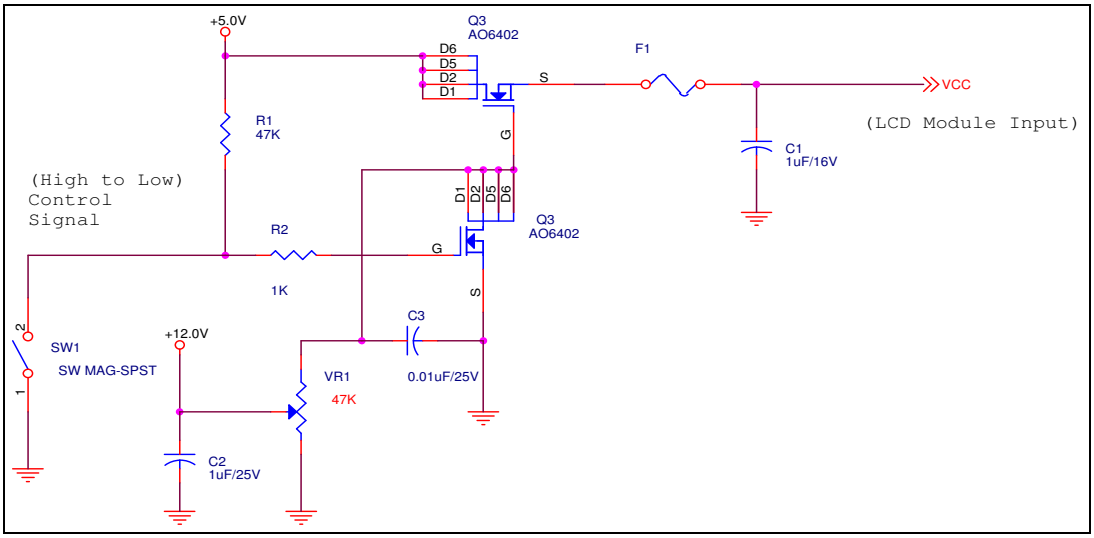

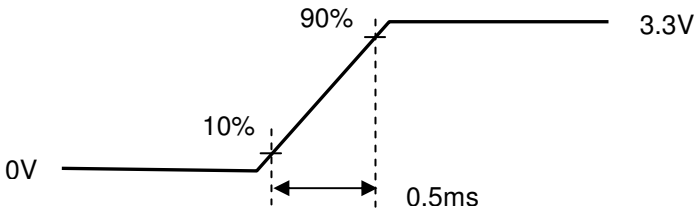

Vin rising time

5.1.2. Signal Electrical Characteristics

Input signals shall be low or Hi-Z state when VDD is off.
It is recommended to refer the specifications of THC63LVDF84A (Thine Electronics Inc.) in detail.
Signal electrical characteristics are as follows;

Parameter	Condition	Min	Max	Unit
Vth	Differential Input High Threshold (Vcm=+1.2V)		100	[mV]
Vtl	Differential Input Low Threshold (Vcm=+1.2V)	-100		[mV]

Note: LVDS Signal Waveform

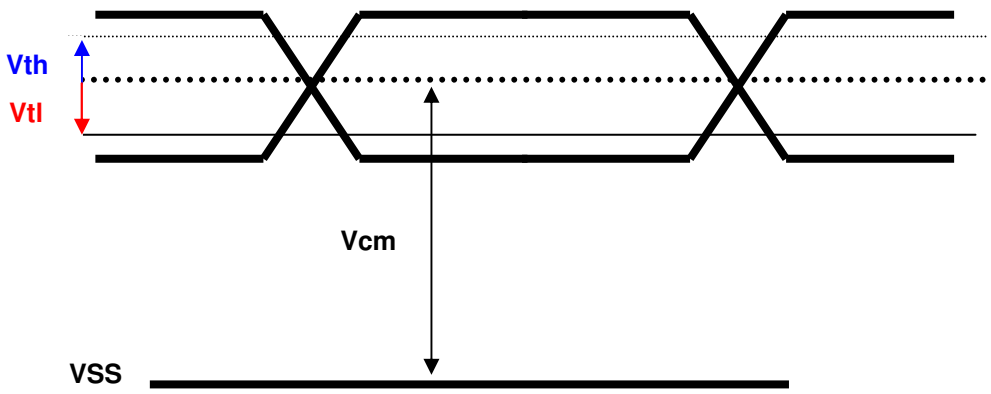

5.2. Backlight Unit

The backlight system is an edge-lighting type with LED (Light Emitting Diode).

The characteristics of the LED are shown in the following table.

Symbol	Parameter	Min.	Typ.	Max.	Unit	Condition
I_L	System Input Current	160	280	480	MA	
V_L	System Input Voltage	7	12	21	Vdc	
V_F	LED Foward Voltage	3.0	3.15	3.3	Vdc	(Ta=25℃)
I_F	LED Foward Current	-	20	30	mA	(Ta=25℃)
P_{LED}	Total Power Consumption	2.5	2.7	2.8	W	(Ta=25℃) Note 1
FL1	Input PWM frequency	17	17.5	18	KHz	
FL2	LED dimming frequency	190	200	210	Hz	
N/A	LED life-time	10,000	-	-	hours	(Ta=25℃) I_F=20 mA Note 2

Note 1: Calculator value for reference IF×VF =P

Note 2: The LED life-time define as the estimated time to 50% degradation of initial luminous.

6. Signal Characteristic

6.1. Pixel Format Image

Following figure shows the relationship of the input signals and LCD pixel format.

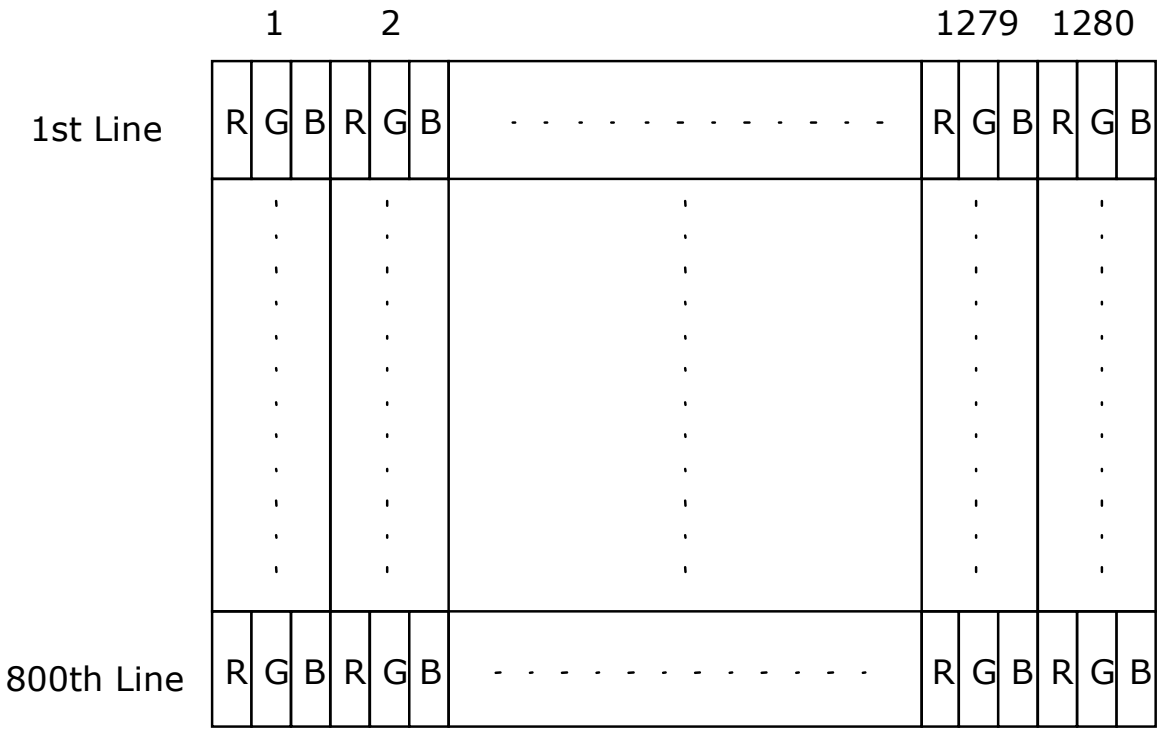

6.2. The input data format

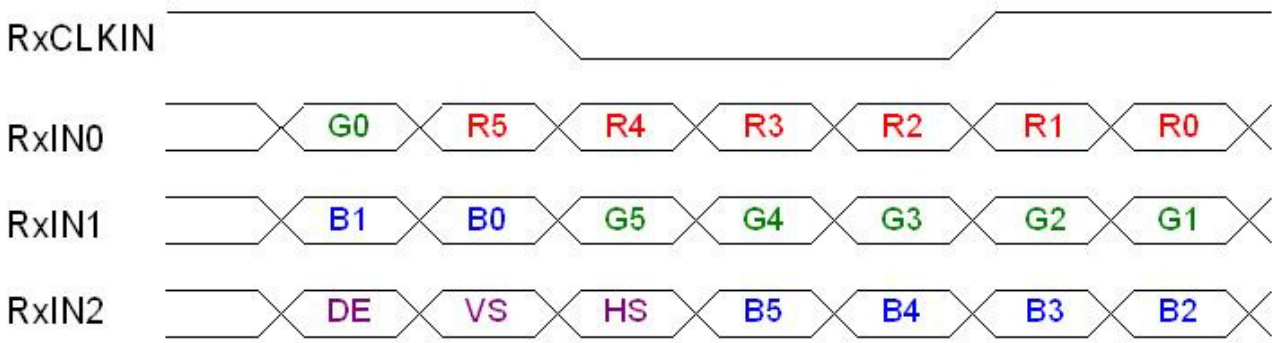

Signal Name	Description	
RED5 RED4 RED3 RED2 RED1 RED0	Red Data 5 (MSB) Red Data 4 Red Data 3 Red Data 2 Red Data 1 Red Data 0 (LSB) Red-pixel Data	Red-pixel Data Each red pixel's brightness data consists of these 6 bits pixel data.
GREEN 5 GREEN 4 GREEN 3 GREEN 2 GREEN 1 GREEN 0	Green Data 5 (MSB) Green Data 4 Green Data 3 Green Data 2 Green Data 1 Green Data 0 (LSB) Green-pixel Data	Green-pixel Data Each green pixel's brightness data consists of these 6 bits pixel data.
BLUE 5 BLUE 4 BLUE 3 BLUE 2 BLUE 1 BLUE 0	Blue Data 5 (MSB) Blue Data 4 Blue Data 3 Blue Data 2 Blue Data 1 Blue Data 0 (LSB) Blue-pixel Data	Blue-pixel Data Each blue pixel's brightness data consists of these 6 bits pixel data.
DTCLK	Data Clock	The typical frequency is 68.9 MHZ.. The signal is used to strobe the pixel data and DSPTMG signals. All pixel data shall be valid at the falling edge when the DSPTMG signal is high.
DSPTMG	Display Timing	This signal is strobed at the falling edge of -DTCLK. When the signal is high, the pixel data shall be valid to be displayed.
VSYNC	Vertical Sync	The signal is synchronized to -DTCLK .
HSYNC	Horizontal Sync	The signal is synchronized to -DTCLK .

Note: Output signals from any system shall be low or Hi-Z state when VDD is off.

6.3. Signal Description / PIN Assignment

PIN#	Signal Name	Description
1	GND	Ground
2	VDD	+3.3V Power Supply
3	VDD	+3.3V Power Supply
4	V_{EDID}	+3.3V EDID Power
5	NC	No Connection (Bist Enable)
6	CLK_{EDID}	EDID Clock Input
7	$DATA_{EDID}$	EDID Data Input
8	RxIN0-	LVDS differential data input(R0-R5, G0)
9	RxIN0+	LVDS differential data input(R0-R5, G0)
10	GND	Ground
11	RxIN1-	LVDS differential data input(G1-G5, B0-B1)
12	RxIN1+	LVDS differential data input(G1-G5, B0-B1)
13	GND	Ground
14	RxIN2-	LVDS differential data input(B2-B5, HS, VS, DE)
15	RxIN2+	LVDS differential data input(B2-B5, HS, VS, DE)
16	GND	Ground
17	RxCLKIN-	LVDS differential clock input
18	RxCLKIN+	LVDS differential clock input
19	GND	Ground
20	NC	No connection

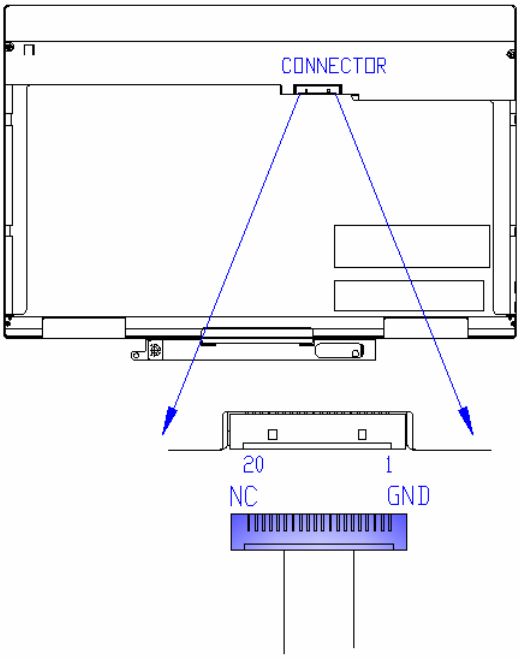

The module uses a 100ohm resistor between positive and negative data lines of each receiver input

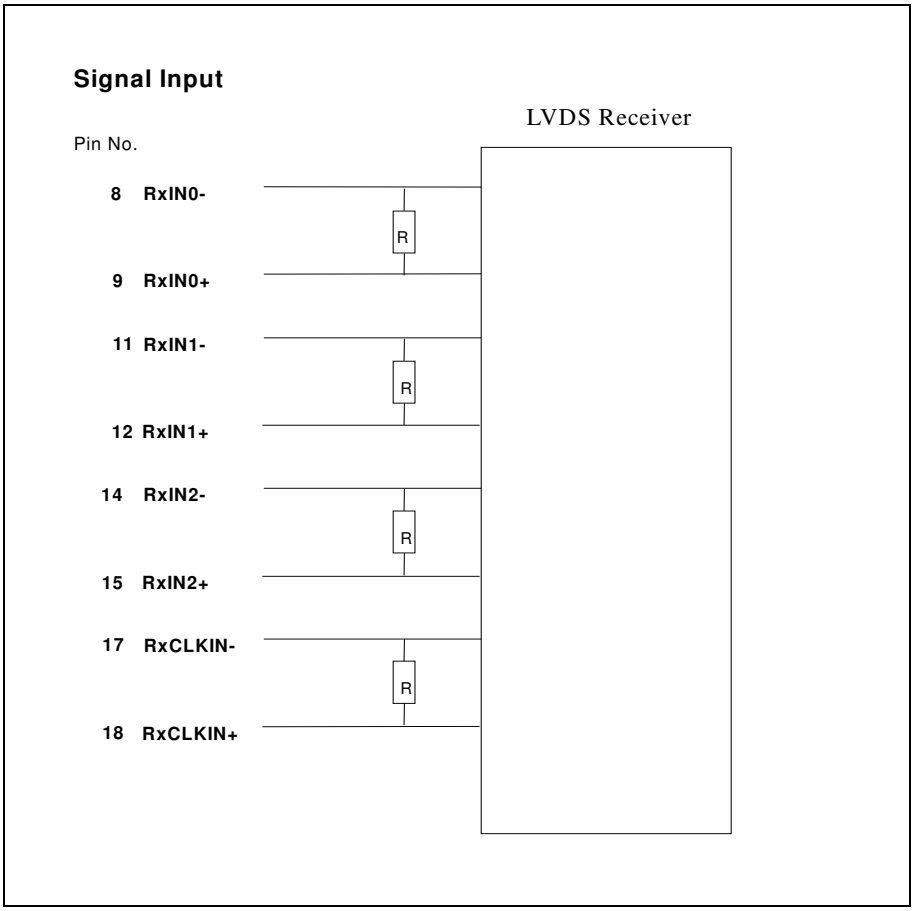

6.4. Interface Timing

6.4.1. Timing Characteristics

Basically, interface timings should match the 1280x800 /60Hz manufacturing guide line timing.

Parameter		Symbol	Min.	Typ.	Max.	Unit
Frame Rate		-	50	60	-	Hz
Clock frequency		$1/T_{Clock}$	62	68.94	72	MHz
Vertical Section	Period	T_V	803	816	832	T_{Line}
	Active	T_{VD}	800	800	800	
	Blanking	T_{VB}	3	16	32	
Horizontal Section	Period	T_H	1302	1408	1700	T_{Clock}
	Active	T_{HD}	-	1280	-	
	Blanking	T_{HB}	22	128	420	
End-frame checking period		tEF	2			T_{Line}
DE checking period		tDE	6400			T_{Line}

Note: DE mode only

6.4.2. Timing diagram

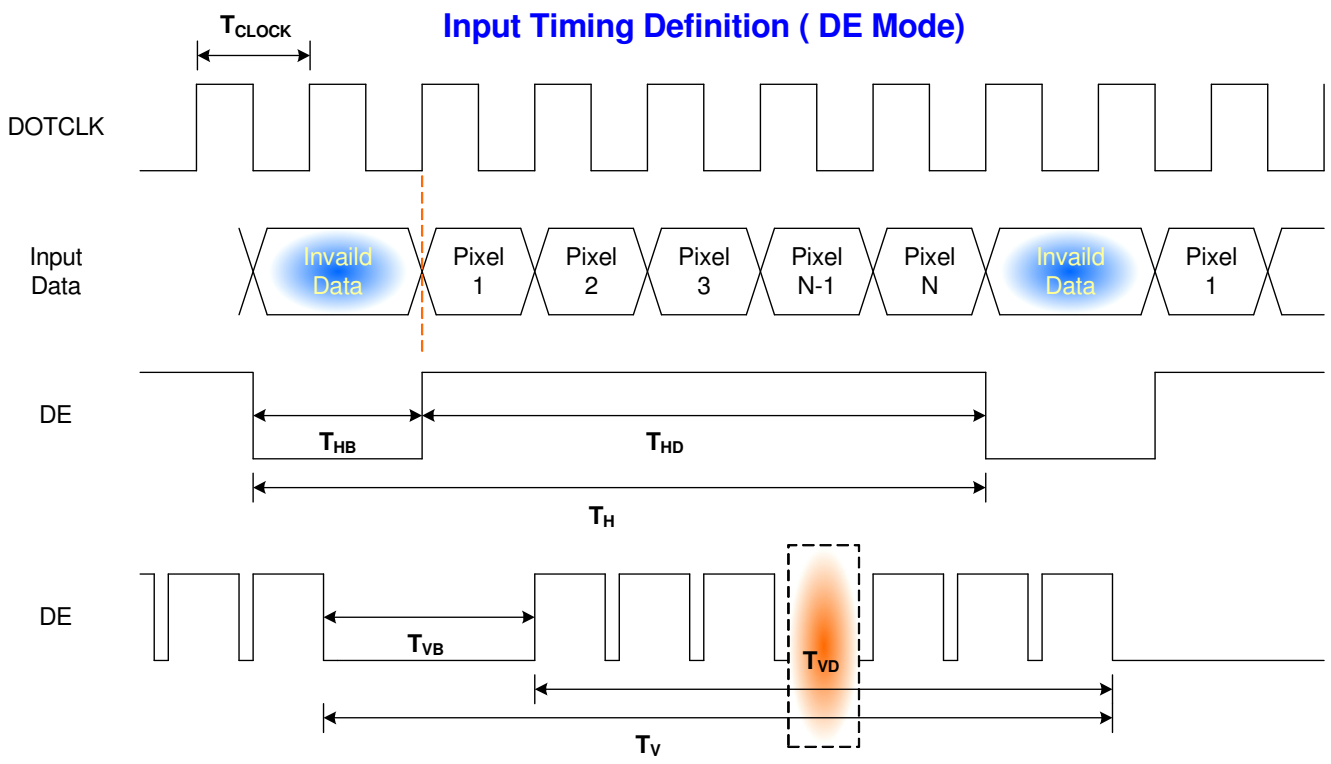

6.5. Power ON/OFF Sequence

VDD power and lamp on/off sequence is as follows. Interface signals are also shown in the chart. Signals from any system shall be Hi-Z state or low level when VDD is off.

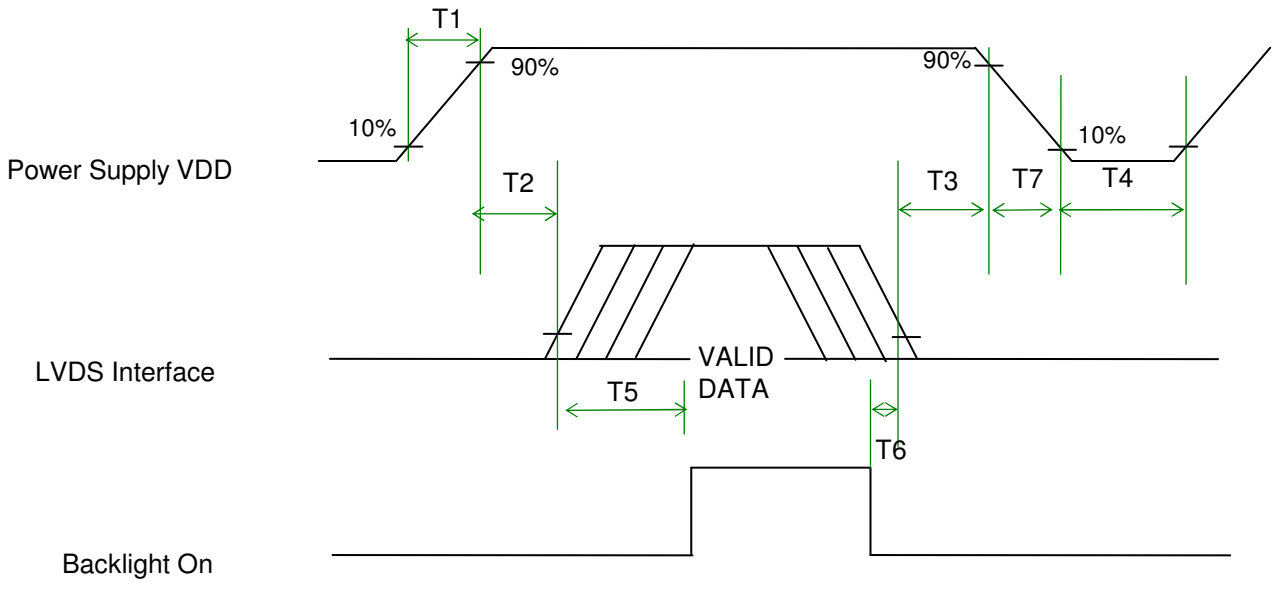

Power Sequence Timing

Parameter	Value			Units
	Min.	Typ.	Max.	
T1	0.5	-	10	(ms)
T2	0	-	50	(ms)
T3	0	-	50	(ms)
T4	500	-	-	(ms)
T5	200	-	-	(ms)
T6	200	-	-	(ms)
T7	0	-	10	(ms)

7. Connector Description

Physical interface is described as for the connector on module.

These connectors are capable of accommodating the following signals and will be following components.

7.1. TFT LCD Module

Connector Name / Designation	For Signal Connector
Manufacturer	Hirose
Type / Part Number	DF19L-20P-1H
Mating Housing/Part Number	DF19G-20S-1C or compatible

8. LED Driving Specification

8.1. Connector Description

Physical interface is described as for the connector on module.

These connectors are capable of accommodating the following signals and will be following components.

Connector Name / Designation	**For Lamp Connector**
Manufacturer	JST
Type / Part Number	SM07B-SRSS-TB
Mating Type / Part Number	SHR-07V-S-B

8.2. PIN Assignment

LVDS is a differential signal technology for LCD interface and high speed data transfer device.

PIN#	**Signal Name**	**Description**
1	NC	NC
2	PWM	high: 3.3V, low: 0V, frequency 100 Hz – 20KHz
3	Logic Power	+5V Power Supply for Controller, enable pin of LED driver
4	GND	Power Ground
5	GND	Power Ground
6	VIN	+7~21V Power Supply
7	VIN	+7~21V Power Supply

9. Vibration and Shock Test

9.1. Vibration Test spec.:

- Test method: Non-Operation
- Acceleration: 1.5G
- Frequency: 26 - 500Hz Random
- Sweep: 30 Minutes each Axis (X, Y, Z)

9.2. Shock Test spec.:

- Test method: Non-Operation
- Acceleration: 180 G , Half sine wave
- Active time: 2 ms
- Pulse: X,Y,Z .one time for each side

10. Reliability

Items	Required Condition	Note
Temperature Humidity Bias	40℃, 90% RH, 300 hours	
High Temperature Operation	50℃, Dry, 300 hours	
Low Temperature Operation	0℃, 300 hours	
Hot Storage	60℃, 300 hours	
Cold Storage	-20℃, 300 hours	
Thermal Shock Test	-20℃/30 min, 60℃/30 min, 100cycles	
ESD	Contact: ±8KV / operation Air: ±15KV / operation	Note 1

Note1: According to EN61000-4-2 , ESD class B: Some performance degradation allowed. No data lost

. Self-recoverable. No hardware failures.

Remark: MTBF (Excluding the LED): 30,000 hours with a confidence level 90

11. Mechanical Characteristics

11.1. LCM Outline Dimension

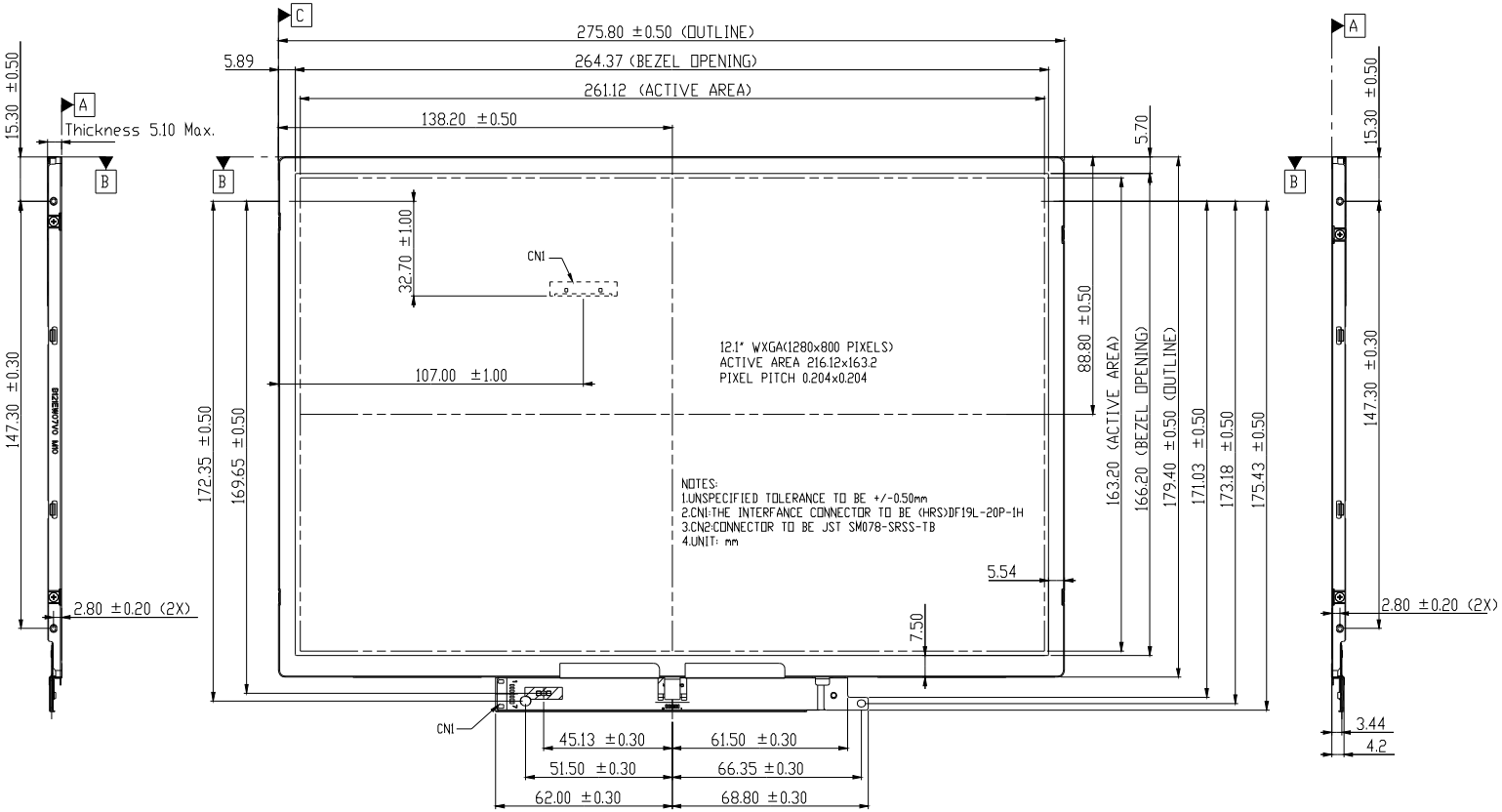

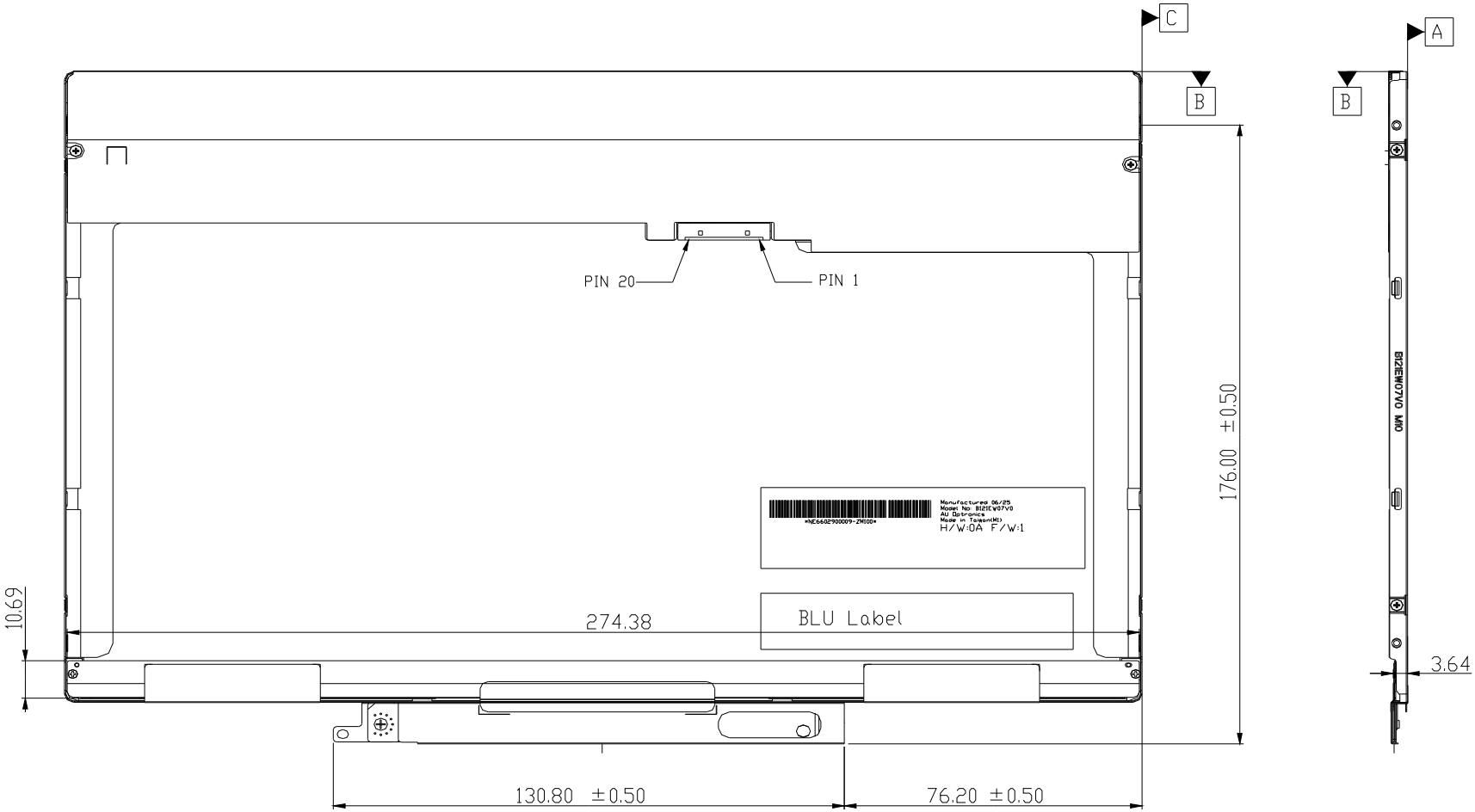
C
B
A
B
PIN 20
PIN 1
176.00 ±0.50
10.69
274.38
BLU Label
130.80 ±0.50
76.20 ±0.50
3.64
B121EW07V0 M00

11.2. Screw Hole Depth and Center Position

Screw hole minimum depth, from side surface =2.50mm Min.

Screw hole center location, from front surface = 2.8 ± 0.20mm (See drawing)
Screw Torque: Maximum 1.8 kgf-cm

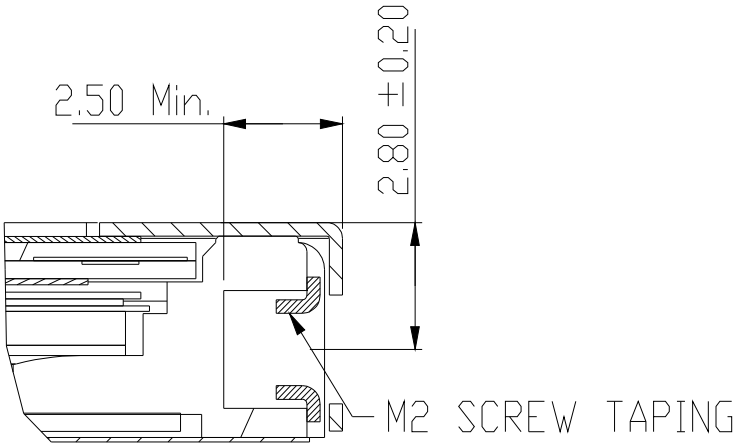

12. Shipping and Package

12.1. Shipping Label Format

12.2. Carton package

The outside dimension of carton is 480 (L)mm x 370 (W)mm x 281 (H)mm

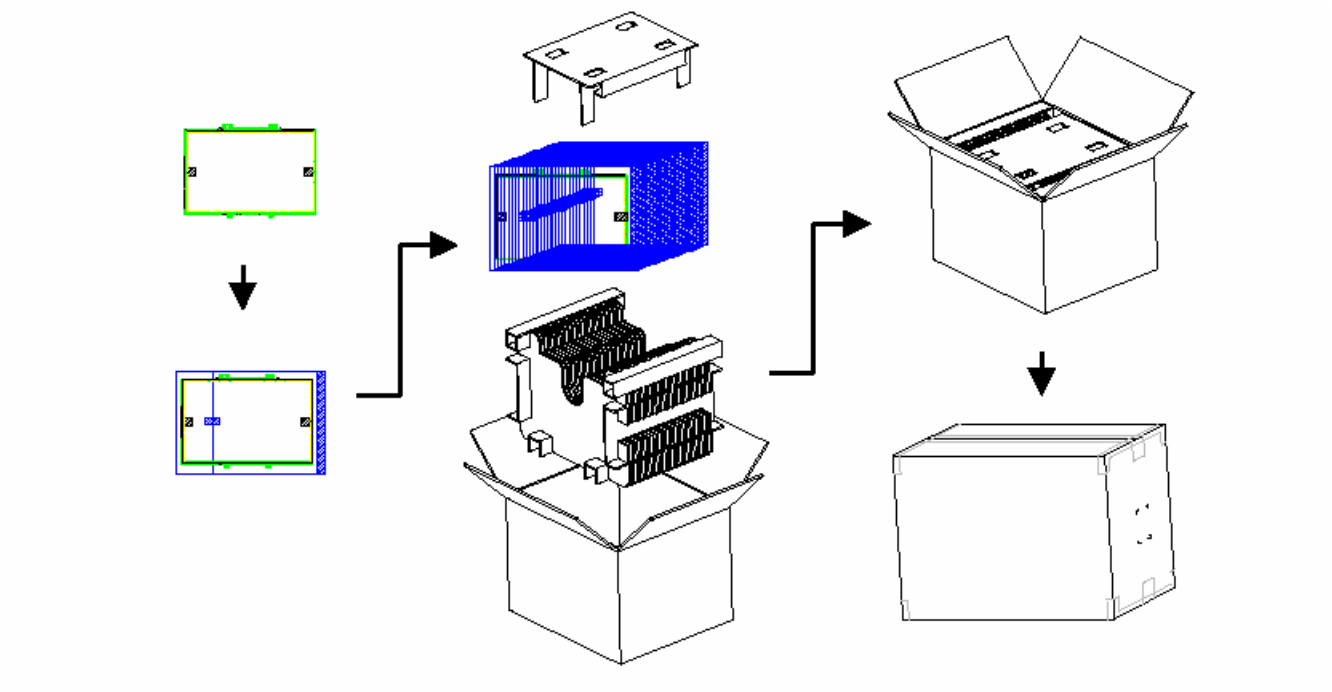

12.3. Shipping package of palletizing sequence

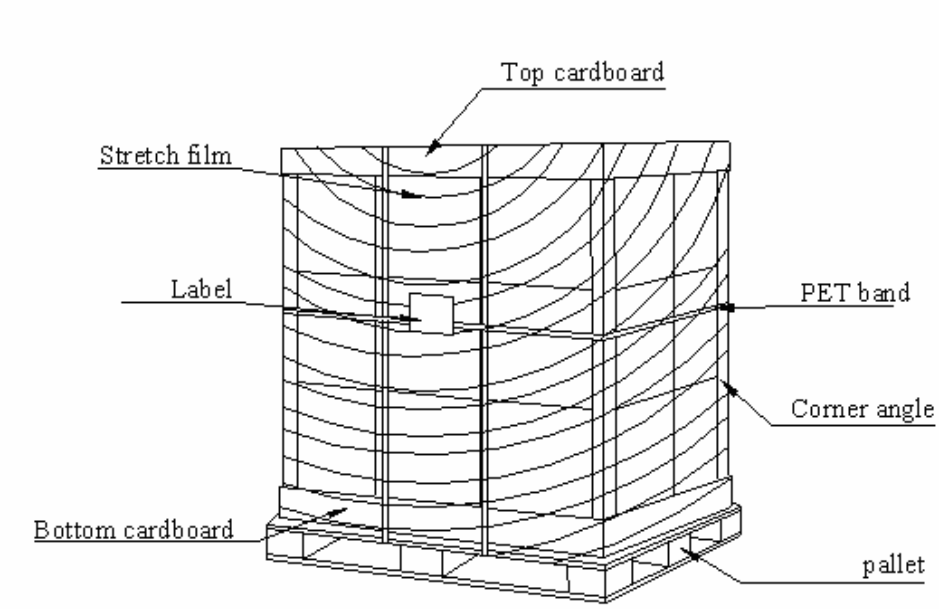

13. Appendix: EDID description

Address	FUNCTION	Value	Value	Value	Note
HEX		HEX	BIN	DEC	
00	Header	00	00000000	0	
01		FF	11111111	255	
02		FF	11111111	255	
03		FF	11111111	255	
04		FF	11111111	255	
05		FF	11111111	255	
06		FF	11111111	255	
07		00	00000000	0	
08	EISA Manuf. Code LSB	06	00000110	6	
09	Compressed ASCII	AF	10101111	175	
0A	Product Code	14	00010100	20	
0B	hex, LSB first	71	01110001	113	
0C	32-bit ser #	00	00000000	0	
0D		00	00000000	0	
0E		00	00000000	0	
0F		00	00000000	0	
10	Week of manufacture	01	00000001	1	
11	Year of manufacture	11	00010001	17	
12	EDID Structure Ver.	01	00000001	1	
13	EDID revision #	03	00000011	3	
14	Video input def. (digital I/P, non-TMDS, CRGB)	80	10000000	128	
15	Max H image size (rounded to cm)	1A	00011010	26	
16	Max V image size (rounded to cm)	10	00010000	16	
17	Display Gamma (=(gamma*100)-100)	78	01111000	120	
18	Feature support (no DPMS, Active OFF, RGB, tmg Blk#1)	0A	00001010	10	
19	Red/green low bits (Lower 2:2:2:2 bits)	87	10000111	135	
1A	Blue/white low bits (Lower 2:2:2:2 bits)	FE	11111110	254	
1B	Red x (Upper 8 bits)	94	10010100	148	
1C	Red y/ highER 8 bits	57	01010111	87	
1D	Green x	4F	01001111	79	
1E	Green y	8C	10001100	140	
1F	Blue x	27	00100111	39	
20	Blue y	27	00100111	39	
21	White x	50	01010000	80	
22	White y	54	01010100	84	
23	Established timing 1	00	00000000	0	

24	Established timing 2	00	00000000	0	
25	Established timing 3	00	00000000	0	
26	Standard timing #1	01	00000001	1	
27		01	00000001	1	
28	Standard timing #2	01	00000001	1	
29		01	00000001	1	
2A	Standard timing #3	01	00000001	1	
2B		01	00000001	1	
2C	Standard timing #4	01	00000001	1	
2D		01	00000001	1	
2E	Standard timing #5	01	00000001	1	
2F		01	00000001	1	
30	Standard timing #6	01	00000001	1	
31		01	00000001	1	
32	Standard timing #7	01	00000001	1	
33		01	00000001	1	
34	Standard timing #8	01	00000001	1	
35		01	00000001	1	
36	Pixel Clock/10000 LSB	EE	11101110	238	
37	Pixel Clock/10000 USB	1A	00011010	26	
38	Horz active Lower 8bits	00	00000000	0	
39	Horz blanking Lower 8bits	80	10000000	128	
3A	HorzAct:HorzBlnk Upper 4:4 bits	50	01010000	80	
3B	Vertical Active Lower 8bits	20	00100000	32	
3C	Vertical Blanking Lower 8bits	10	00010000	16	
3D	Vert Act : Vertical Blanking (upper 4:4 bit)	30	00110000	48	
3E	HorzSync. Offset	30	00110000	48	
3F	HorzSync.Width	20	00100000	32	
40	VertSync.Offset : VertSync.Width	36	00110110	54	
41	Horz&Vert Sync Offset/Width Upper 2bits	00	00000000	0	
42	Horizontal Image Size Lower 8bits	05	00000101	5	
43	Vertical Image Size Lower 8bits	A3	10100011	163	
44	Horizontal & Vertical Image Size (upper 4:4 bits)	10	00010000	16	
45	Horizontal Border (zero for internal LCD)	00	00000000	0	
46	Vertical Border (zero for internal LCD)	00	00000000	0	
47	Signal (non-intr, norm, no stero, sep sync, neg pol)	18	00011000	24	
48	Detailed timing/monitor	00	00000000	0	
49	descriptor #2	00	00000000	0	
4A		00	00000000	0	
4B		0F	00001111	15	
4C		00	00000000	0	

4D		00	00000000	0	
4E		00	00000000	0	
4F		00	00000000	0	
50		00	00000000	0	
51		00	00000000	0	
52		00	00000000	0	
53		00	00000000	0	
54		00	00000000	0	
55		00	00000000	0	
56		00	00000000	0	
57		00	00000000	0	
58		00	00000000	0	
59		20	00100000	32	
5A	Detailed timing/monitor	00	00000000	0	
5B	descriptor #3	00	00000000	0	
5C		00	00000000	0	
5D		FE	11111110	254	
5E		00	00000000	0	
5F	Manufacture	41	01000001	65	A
60	Manufacture	55	01010101	85	U
61	Manufacture	4F	01001111	79	O
62		0A	00001010	10	
63		20	00100000	32	
64		20	00100000	32	
65		20	00100000	32	
66		20	00100000	32	
67		20	00100000	32	
68		20	00100000	32	
69		20	00100000	32	
6A		20	00100000	32	
6B		20	00100000	32	
6C	Detailed timing/monitor	00	00000000	0	
6D	descriptor #4	00	00000000	0	
6E		00	00000000	0	
6F		FE	11111110	254	
70		00	00000000	0	
71	Manufacture P/N	42	01000010	66	B
72	Manufacture P/N	31	00110001	49	1
73	Manufacture P/N	32	00110010	50	2
74	Manufacture P/N	31	00110001	49	1
75	Manufacture P/N	45	01000101	69	E

76	Manufacture P/N	57	01010111	87	W
77	Manufacture P/N	30	00110000	48	0
78	Manufacture P/N	37	00110111	55	7
79	Manufacture P/N	20	00100000	32	
7A	Manufacture P/N	56	01010110	86	V
7B	Manufacture P/N	31	00110001	49	1
7C		20	00100000	32	
7D		0A	00001010	10	
7E	Extension Flag	00	00000000	0	
7F	Checksum	CB	11001011	203	