( ) **Preliminary Specifications**
(V) **Final Specifications**

Module	**13.3”(13.25”) FHD 16:9 Color TFT-LCD with LED Backlight design**
Model Name	B133XW01 V7 (H/W:0A)
Note ( )	***LED Backlight with driving circuit design***

Customer	**Date**
Checked & Approved by	**Date**
Note: This Specification is subject to change without notice.	

Approved by	**Date**
Flossie Chuang	07/02/2010
Prepared by	
Kay CY Wang	07/01/2010
AU Optronics corporation	

Contents

1. Handling Precautions 4
2. General Description 5
2.1 General Specification 5
2.2 Optical Characteristics 5
3. Functional Block Diagram 11
4. Absolute Maximum Ratings 12
4.1 Absolute Ratings of TFT LCD Module 12
4.2 Absolute Ratings of Environment 12
5. Electrical Characteristics 13
5.1 TFT LCD Module 13
5.2 Backlight Unit 15
6. Signal Interface Characteristic 16
6.1 Pixel Format Image 16
6.2 The Input Data Format 17
6.3 Integration Interface Requirement 18
6.4 Interface Timing 20
7. Panel Reliability Test 22
7.1 Vibration Test 22
7.2 Shock Test 22
7.3 Reliability Test 22
8. Mechanical Characteristics 23
8.1 LCM Outline Dimension 23
9. Shipping and Package 25
9.1 Shipping Label Format 25
9.2 Carton Package 26
9.3 Shipping Package of Palletizing Sequence 26
10. Appendix: EDID Description 27

Record of Revision

Version and Date	Page	Old description	New Description	Remark
0.1 2010/04/21	All	First Edition for Customer		
1.0 2010/07/02			Final Version	

1. Handling Precautions

1) Since front polarizer is easily damaged, pay attention not to scratch it.
2) Be sure to turn off power supply when inserting or disconnecting from input connector.
3) Wipe off water drop immediately. Long contact with water may cause discoloration or spots.
4) When the panel surface is soiled, wipe it with absorbent cotton or other soft cloth.
5) Since the panel is made of glass, it may break or crack if dropped or bumped on hard surface.
6) Since CMOS LSI is used in this module, take care of static electricity and insure human earth when handling.
7) Do not open nor modify the Module Assembly.
8) Do not press the reflector sheet at the back of the module to any directions.
9) At the insertion or removal of the Signal Interface Connector, be sure not to rotate nor tilt the Interface Connector of the TFT Module.
11) After installation of the TFT Module into an enclosure (Notebook PC Bezel, for example), do not twist nor bend the TFT Module even momentary. At designing the enclosure, it should be taken into consideration that no bending/twisting forces are applied to the TFT Module from outside. Otherwise the TFT Module may be damaged.
12) Small amount of materials having no flammability grade is used in the LCD module. The LCD module should be supplied by power complied with requirements of Limited Power Source (IEC60950 or UL1950), or be applied exemption.
13) Disconnecting power supply before handling LCD modules, it can prevent electric shock, DO NOT TOUCH the electrode parts, cables, connectors and LED circuit part of TFT module that a LED light bar build in as a light source of back light unit. It can prevent electrostic breakdown.

2. General Description

B133XW01 V7 is a Color Active Matrix Liquid Crystal Display composed of a TFT LCD panel, a driver circuit, and LED backlight system. The screen format is intended to support the 16:9 HD, 1366(H) x768(V) screen and 262k colors (RGB 6-bits data driver) with LED backlight driving circuit. All input signals are LVDS interface compatible.

B133XW01 V7 is designed for a display unit of notebook style personal computer and industrial machine.

2.1 General Specification

The following items are characteristics summary on the table at 25 ℃ condition:

Items	Unit	Specifications			
Screen Diagonal	[mm]	13.3W"(13.25)			
Active Area	[mm]	293.42 x 164.97			
Pixels H x V		1366 x 3(RGB) x 768			
Pixel Pitch	[mm]	0.2148 x 0.2148			
Pixel Format		R.G.B. Vertical Stripe			
Display Mode		Normally White			
White Luminance (ILED=20mA) **(Note: ILED is LED current)**	[cd/m^2]	200 typ. (5 points average) 170 min. (5 points average)			
Luminance Uniformity		1.25 max. (5 points)			
Contrast Ratio		500 typ			
Response Time	[ms]	8 typ / 16 Max			
Nominal Input Voltage VDD	[Volt]	+3.3 typ.			
Power Consumption	[Watt]	5.8W			
Weight	[Grams]	310 max.			
Physical Size **Include bracket**	[mm]		Min.	Typ.	Max.
		Length	---	---	317.7
		Width	---	---	193.8
		Thickness	---	---	3.6
Electrical Interface		1 channel LVDS			
Glass Thickness	[mm]	0.5			
Surface Treatment		Glare, Hardness 3H			
Support Color		262K colors (RGB 6-bit)			
Temperature Range Operating Storage (Non-Operating)	 [^{o}C] [^{o}C]	 0 to +50 -20 to +60			
RoHS Compliance		RoHS Compliance			

2.2 Optical Characteristics

The optical characteristics are measured under stable conditions at 25℃ (Room Temperature) :

Item		Symbol	Conditions	Min.	Typ.	Max.	Unit	Note
White Luminance ILED=20mA			5 points average	170	200	---	cd/m^2	1, 4, 5.
Viewing Angle		θ_R	Horizontal (Right) CR = 10	---	45	---	degree	4, 9
		θ_L	(Left)	---	45	---		
		ψ_H	Vertical (Upper) CR = 10	---	15	---		
		ψ_L	(Lower)	---	30	---		
Luminance Uniformity		δ_{5P}	5 Points	---	---	1.25		1, 3, 4
Contrast Ratio		CR		400	500	---		4, 6
Cross talk		%		---	---	4		4, 7
Response Time		T_{RT}	Rising + Falling	---	8	16	msec	4, 8
Color / Chromaticity Coodinates	Red	Rx	CIE 1931	0.594	0.624	0.654	---	4
		Ry		0.314	0.344	0.374		
	Green	Gx		0.296	0.326	0.356		
		Gy		0.544	0.574	0.604		
	Blue	Bx		0.120	0.150	0.180		
		By		0.024	0.054	0.084		
	White	Wx		0.273	0.313	0.353		
		Wy		0.289	0.329	0.359		
NTSC		%		----	60	----		

Note 1: 5 points position (Ref: Active area)

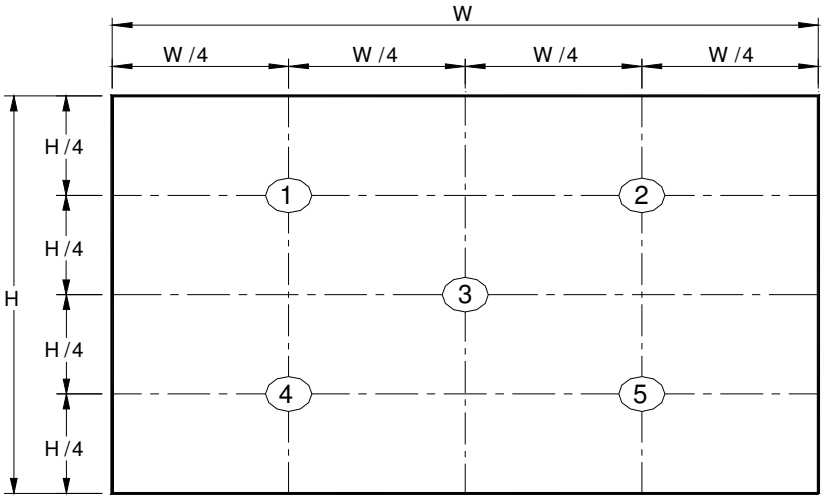

Note 2: 13 points position (Ref: Active area)

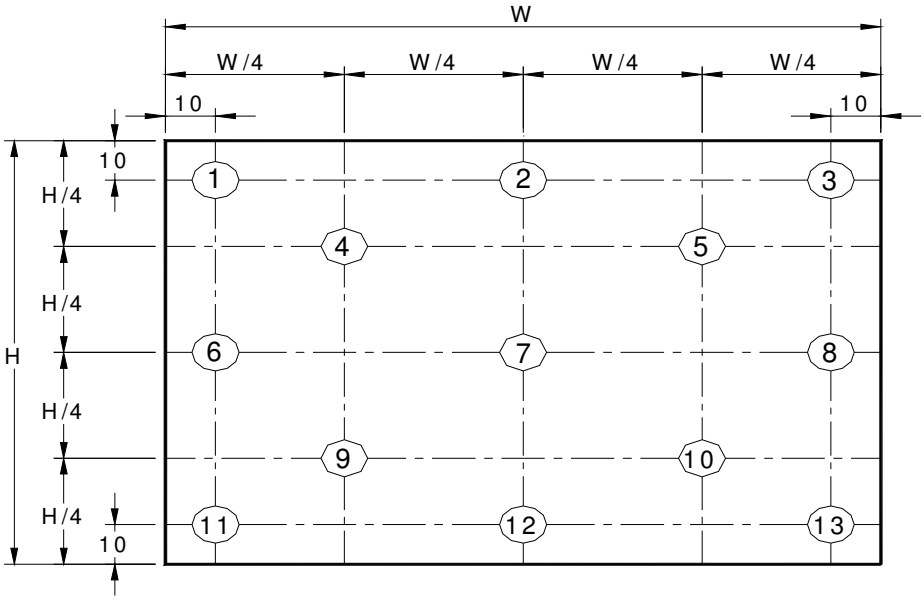

Note 3: The luminance uniformity of 5 or13 points is defined by dividing the maximum luminance values by the minimum test point luminance

$$\delta_{W5} = \frac{\text{Maximum Brightness of five points}}{\text{Minimum Brightness of five points}}$$

$$\delta_{W13} = \frac{\text{Maximum Brightness of thirteen points}}{\text{Minimum Brightness of thirteen points}}$$

Note 4: Measurement method

The LCD module should be stabilized at given temperature for 30 minutes to avoid abrupt temperature change during measuring. In order to stabilize the luminance, the measurement should be executed after lighting

Backlight for 30 minutes in a stable, windless and dark room, and it should be measured in the center of screen.

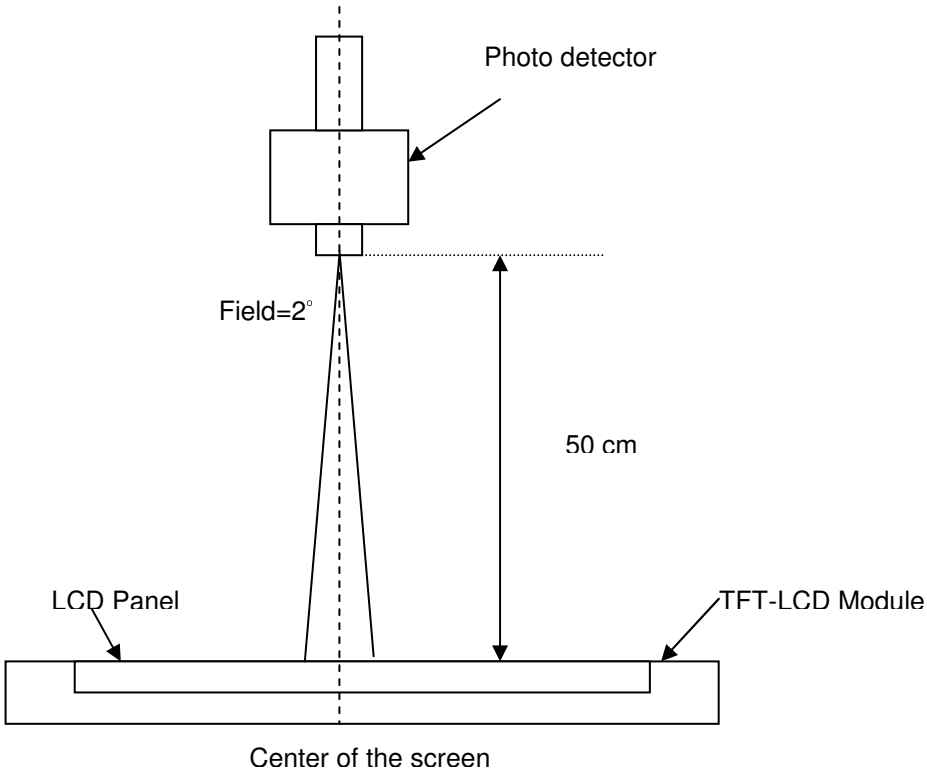

Note 5： Definition of Average Luminance of White (Y_L):

Measure the luminance of gray level 63 at 5 points，Y_L = [L (1)+ L (2)+ L (3)+ L (4)+ L (5)] / 5

L (x) is corresponding to the luminance of the point X at Figure in Note (1).

Note 6： Definition of contrast ratio:

Contrast ratio is calculated with the following formula.

$$\text{Contrast ratio (CR)} = \frac{\text{Brightness on the “White” state}}{\text{Brightness on the “Black” state}}$$

Note 7： Definition of Cross Talk (CT)

$CT = | Y_B – Y_A | / Y_A \times 100$ (%)

Where

Y_A = Luminance of measured location without gray level 0 pattern (cd/m2)

Y_B = Luminance of measured location with gray level 0 pattern (cd/m2)

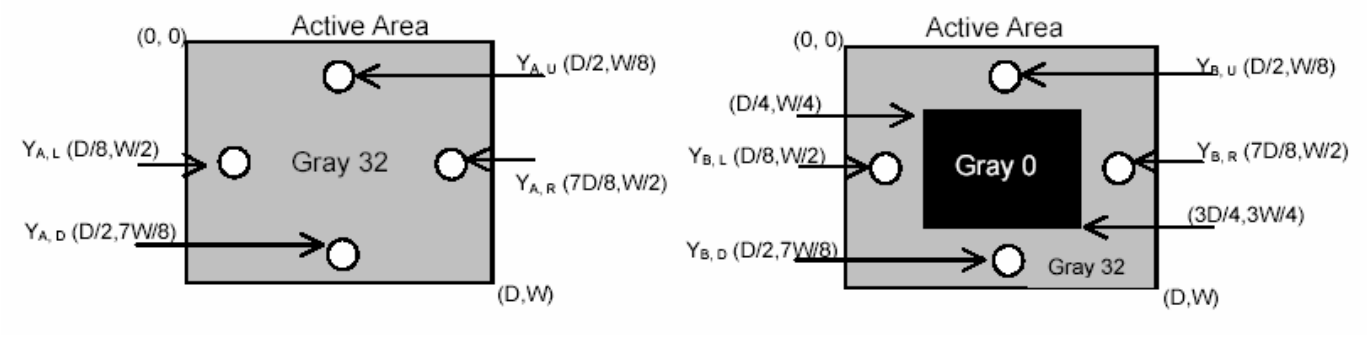

Note 8: Definition of response time:

The output signals of BM-7 or equivalent are measured when the input signals are changed from “Black” to “White” (falling time) and from “White” to “Black” (rising time), respectively. The response time interval between the 10% and 90% of amplitudes. Refer to figure as below.

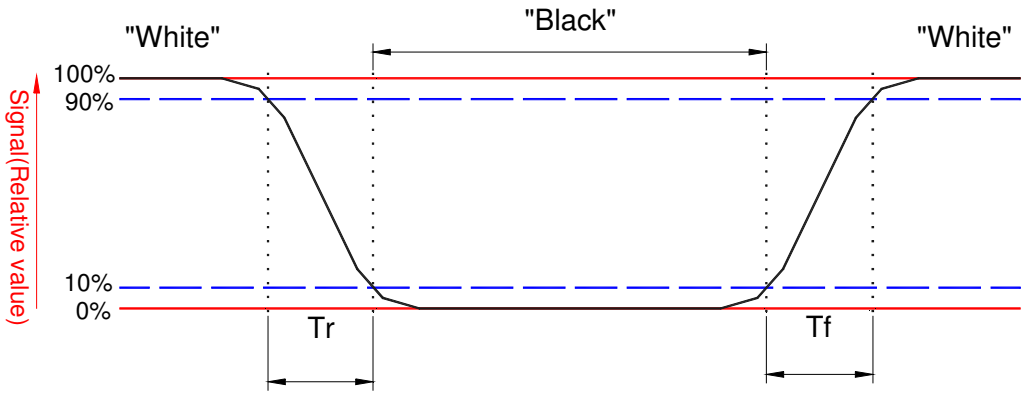

Note 9. Definition of viewing angle

Viewing angle is the measurement of contrast ratio ≧10, at the screen center, over a 180° horizontal and 180° vertical range (off-normal viewing angles). The 180° viewing angle range is broken down as follows; 90° (θ) horizontal left and right and 90° (Φ) vertical, high (up) and low (down). The measurement direction is typically perpendicular to the display surface with the screen rotated about its center to develop the desired measurement viewing angle.

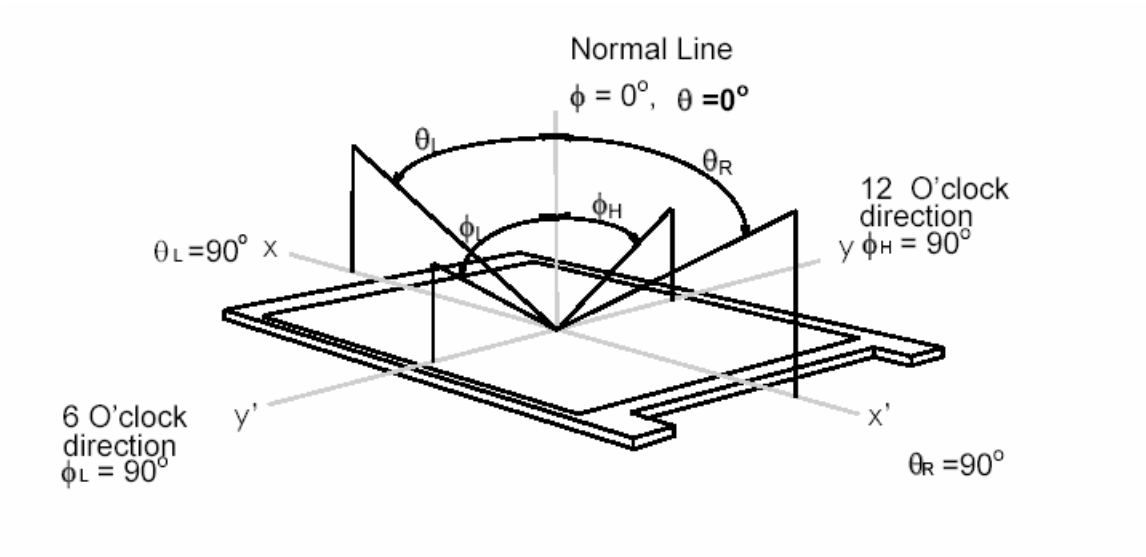

3. Functional Block Diagram

The following diagram shows the functional block of the 13.3 inches wide Color TFT/LCD 40 Pin one channel Module

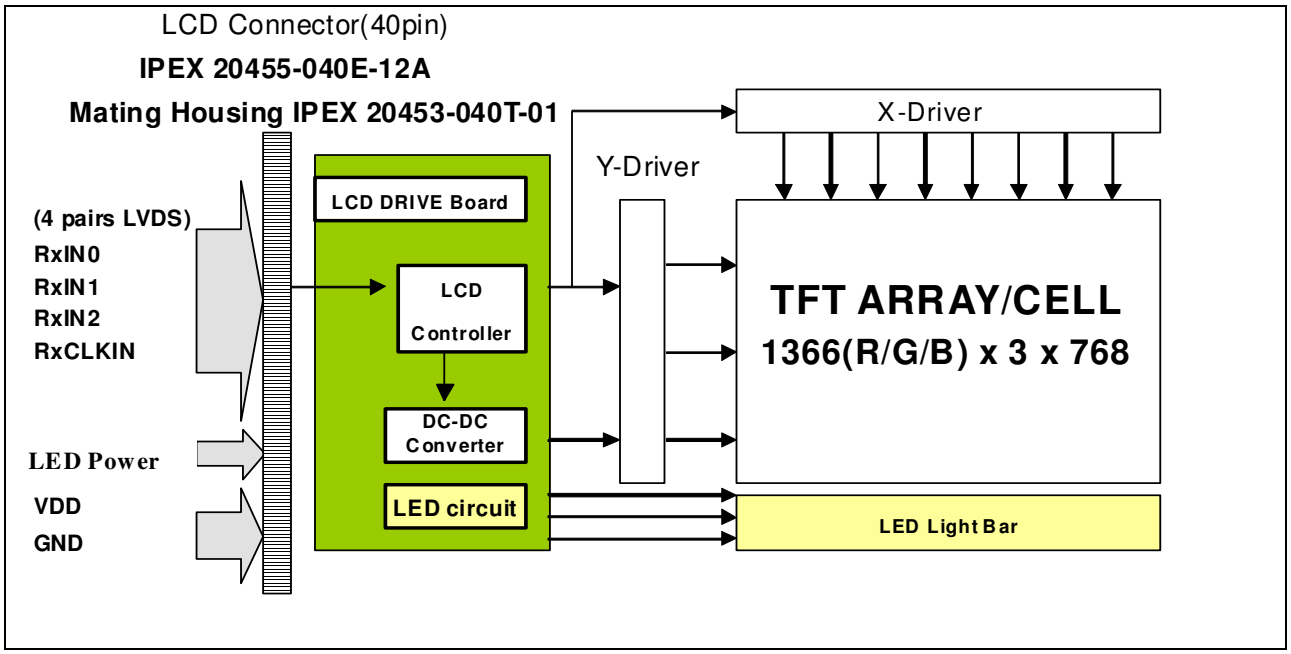

4. Absolute Maximum Ratings

An absolute maximum rating of the module is as following:

4.1 Absolute Ratings of TFT LCD Module

Item	Symbol	Min	Max	Unit	Conditions
Logic/LCD Drive Voltage	Vin	-0.3	+4.0	[Volt]	Note 1,2

4.2 Absolute Ratings of Environment

Item	Symbol	Min	Max	Unit	Conditions
Operating Temperature	TOP	0	+50	[°C]	Note 4
Operation Humidity	HOP	5	95	[%RH]	Note 4
Storage Temperature	TST	-20	+60	[°C]	Note 4
Storage Humidity	HST	5	95	[%RH]	Note 4

Note 1: At Ta (25℃)

Note 2: Permanent damage to the device may occur if exceed maximum values

Note 3: LED specification refer to section 5.2

Note 4: For quality performance, please refer to AUO IIS (Incoming Inspection Standard).

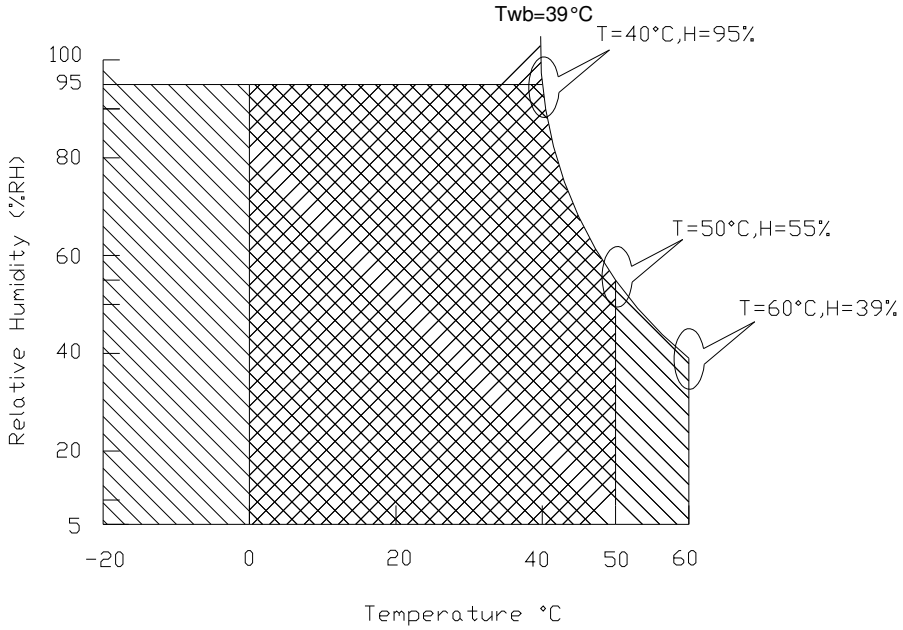

Operating Range Storage Range +

5. Electrical Characteristics

5.1 TFT LCD Module

5.1.1 Power Specification

Input power specifications are as follows;

The power specification are measured under 25℃ and frame frenquency under 60Hz

Symble	Parameter	Min	Typ	Max	Units	Note
VDD	Logic/LCD Drive Voltage	3.0	3.3	3.6	[Volt]	
PDD	VDD Power	-	-	3.9	[Watt]	Note 1
IDD	IDD Current	-	-	300	[mA]	Note 1
IRush	Inrush Current	-	-	2000	[mA]	Note 2
VDDrp	Allowable Logic/LCD Drive Ripple Voltage	-	-	100	[mV] p-p	

Note 1 : Maximum Measurement Condition：Black Pattern at 3.3V driving voltage. ($P_{max}=V_{3.3} \times I_{black}$)

Note 2：Measure Condition

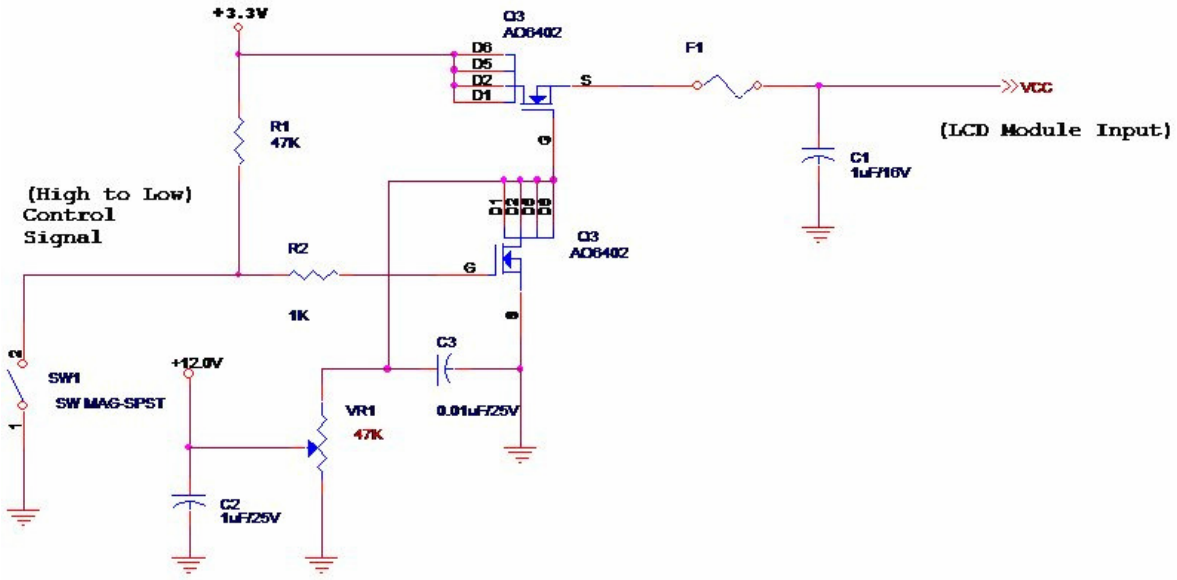

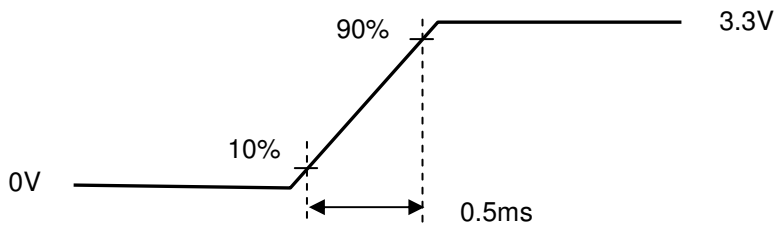

Vin rising time

5.1.2 Signal Electrical Characteristics

Input signals shall be low or High-impedance state when VDD is off.

Signal electrical characteristics are as follows;

Parameter	Condition	Min	Max	Unit
V_{TH}	Differential Input High Threshold (Vcm=+1.2V)	---	100	[mV]
V_{TL}	Differential Input Low Threshold (Vcm=+1.2V)	-100	---	[mV]
$\|V_{ID}\|$	Differential Input Voltage	100	600	[mV]
V_{CM}	Differential Input Common Mode Voltage	1.125	1.375	[V]

Note: LVDS Signal Waveform

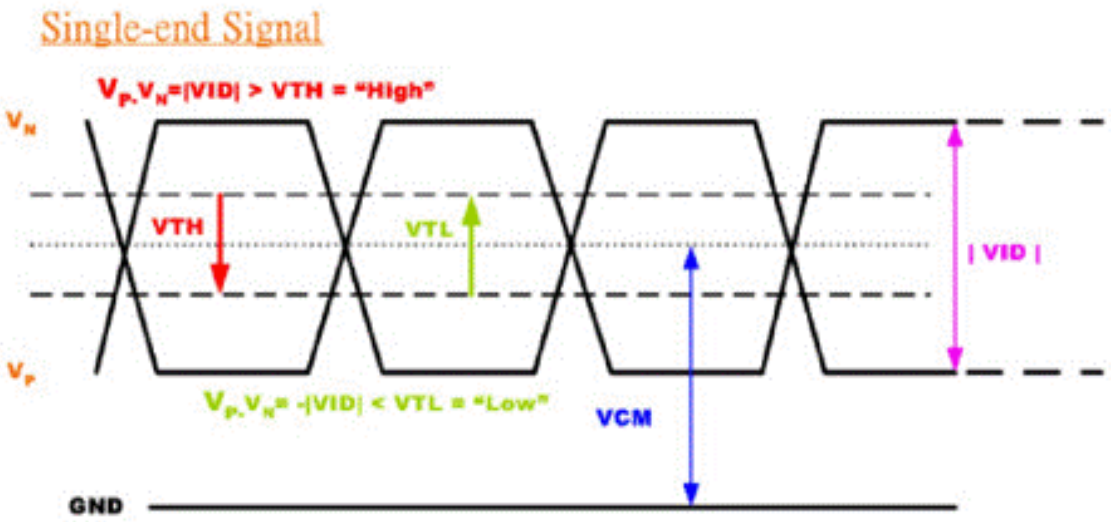

5.2 Backlight Unit

5.2.1 LED characteristics

Parameter	Symbol	Min	Typ	Max	Units	Condition
Backlight Power Consumption	PLED	-	-	2.2	[Watt]	(Ta=25℃), Note 1 Vin =12V
LED Life-Time	N/A	10,000	-	-	Hour	(Ta=25℃), Note 2 I_F=20 mA

Note 1: Calculator value for reference P_{LED} = V_F (Normal Distribution) * I_F (Normal Distribution) / Efficiency

Note 2: The LED life-time define as the estimated time to 50% degradation of initial luminous.

5.2.2 Backlight input signal characteristics

Parameter	Symbol	Min	Typ	Max	Units	Remark
LED Power Supply	VLED	6.0	12.0	21.0	[Volt]	Define as Connector Interface (Ta=25℃)
LED Enable Input High Level	VLED_EN	2.5	-	5.5	[Volt]	
LED Enable Input Low Level		-	-	0.8	[Volt]	
PWM Logic Input High Level	VPWM_EN	2.5	-	5.5	[Volt]	
PWM Logic Input Low Level		-	-	0.8	[Volt]	
PWM Input Frequency	FPWM	100	200	20k	Hz	
PWM Duty Ratio	Duty	5	-	100	%	

6. Signal Interface Characteristic

6.1 Pixel Format Image

Following figure shows the relationship of the input signals and LCD pixel format.

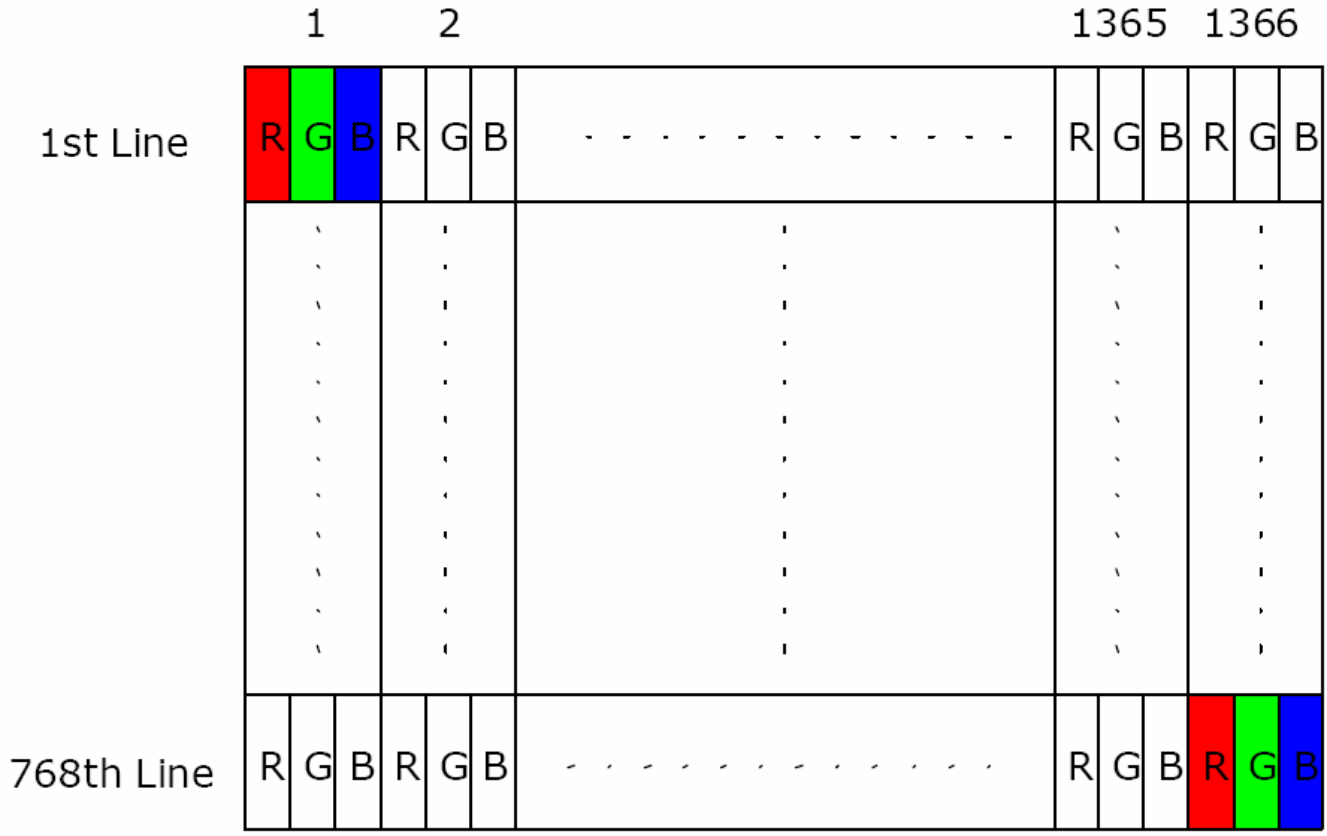

6.2 The Input Data Format

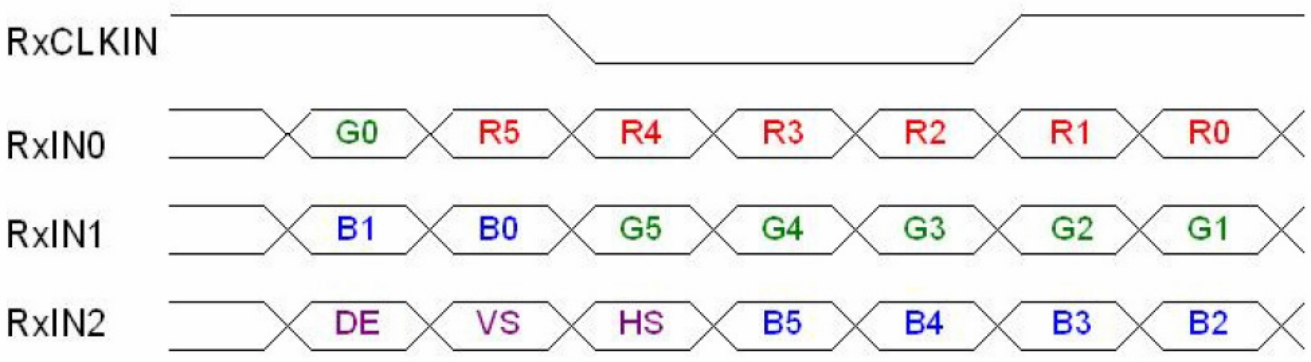

Signal Name	Description	
R5 R4 R3 R2 R1 R0	Red Data 5 (MSB) Red Data 4 Red Data 3 Red Data 2 Red Data 1 Red Data 0 (LSB) Red-pixel Data	Red-pixel Data Each red pixel's brightness data consists of these 6 bits pixel data.
G5 G4 G3 G2 G1 G0	Green Data 5 (MSB) Green Data 4 Green Data 3 Green Data 2 Green Data 1 Green Data 0 (LSB) Green-pixel Data	Green-pixel Data Each green pixel's brightness data consists of these 6 bits pixel data.
B5 B4 B3 B2 B1 B0	Blue Data 5 (MSB) Blue Data 4 Blue Data 3 Blue Data 2 Blue Data 1 Blue Data 0 (LSB) Blue-pixel Data	Blue-pixel Data Each blue pixel's brightness data consists of these 6 bits pixel data.
RxCLKIN	Data Clock	The signal is used to strobe the pixel data and DE signals. All pixel data shall be valid at the falling edge when the DE signal is high.
DE	Display Timing	This signal is strobed at the falling edge of RxCLKIN. When the signal is high, the pixel data shall be valid to be displayed.
VS	Vertical Sync	The signal is synchronized to RxCLKIN .
HS	Horizontal Sync	The signal is synchronized to RxCLKIN .

Note: Output signals from any system shall be low or High-impedance state when VDD is off.

6.3 Integration Interface Requirement

6.3.1 Connector Description

Physical interface is described as for the connector on module.

These connectors are capable of accommodating the following signals and will be following components.

Connector Name / Designation	For Signal Connector
Manufacturer	IPEX or Compatible
Type / Part Number	IPEX 20455-040E-12R or Compatible
Mating Housing/Part Number	IPEX 20453-040T-01 or Compatible

6.3.2 Pin Assignment

LVDS is a differential signal technology for LCD interface and high speed data transfer device.

PIN#	Signal Name	Description
1	NC	No Connection (Reserve)
2	AVDD	PowerSupply,3.3V(typical)
3	AVDD	PowerSupply,3.3V(typical)
4	DVDD	DDC 3.3Vpower
5	NC	No Connection (Reserve)
6	SCL	DDC Clock
7	SDA	DDC Data
8	Rin0-	-LVDS differential data input(R0-R5,G0)
9	Rin0+	+LVDS differential data input(R0-R5,G0)
10	GND	Ground
11	Rin1-	-LVDS differential data input(G1-G5,B0-B1)
12	Rin1+	+LVDS differential data input(G1-G5,B0-B1)
13	GND	Ground
14	Rin2-	-LVDS differential data input(B2-B5,HS,VS,DE)
15	Rin2+	+LVDS differential data input(B2-B5,HS,VS,DE)
16	GND	Ground
17	ClkIN-	-LVDS differential clock input
18	ClkIN+	+LVDS differential clock input
19	GND	Ground–Shield
20	NC	No Connection (Reserve)
21	NC	No Connection (Reserve)
22	GND	Ground–Shield

23	NC	No Connection (Reserve)
24	NC	No Connection (Reserve)
25	GND	Ground–Shield
26	NC	No Connection (Reserve)
27	NC	No Connection (Reserve)
28	GND	Ground–Shield
29	NC	No Connection (Reserve)
30	NC	No Connection (Reserve)
31	VLED_GND	LED Ground
32	VLED_GND	LED Ground
33	VLED_GND	LED Ground
34	NC	No Connection (Reserve)
35	PWM	System PWM Signal Input
36	LED_EN	LED enable pin(+3V Input)
37	NC	No Connection (Reserve)
38	VLED	LED Power Supply 6V-21V
39	VLED	LED Power Supply 6V-21V
40	VLED	LED Power Supply 6V-21V

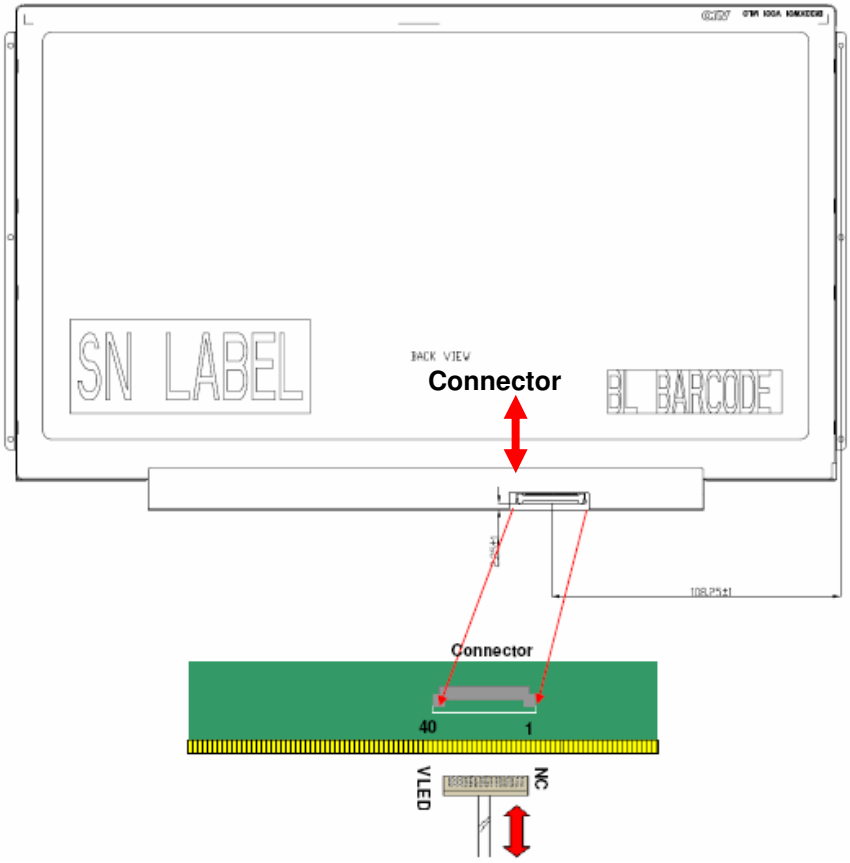

Note1: Input signals shall be low or High-impedance state when VDD is off.

6.4 Interface Timing

6.4.1 Timing Characteristics

Basically, interface timings should match the 1366x768 /60Hz manufacturing guide line timing.

Parameter		Symbol	Min.	Typ.	Max.	Unit
Frame Rate		-	50	60		Hz
Clock frequency		1/ T_{Clock}	50	69.3	80	MHz
Vertical Section	Period	T_V	780	794		T_{Line}
	Active	T_{VD}	768			
	Blanking	T_{VB}	8	25	200	
Horizontal Section	Period	T_H	1426	1456		T_{Clock}
	Active	T_{HD}	1366			
	Blanking	T_{HB}	60	90	720	

Note : DE mode only

6.4.2 Timing diagram

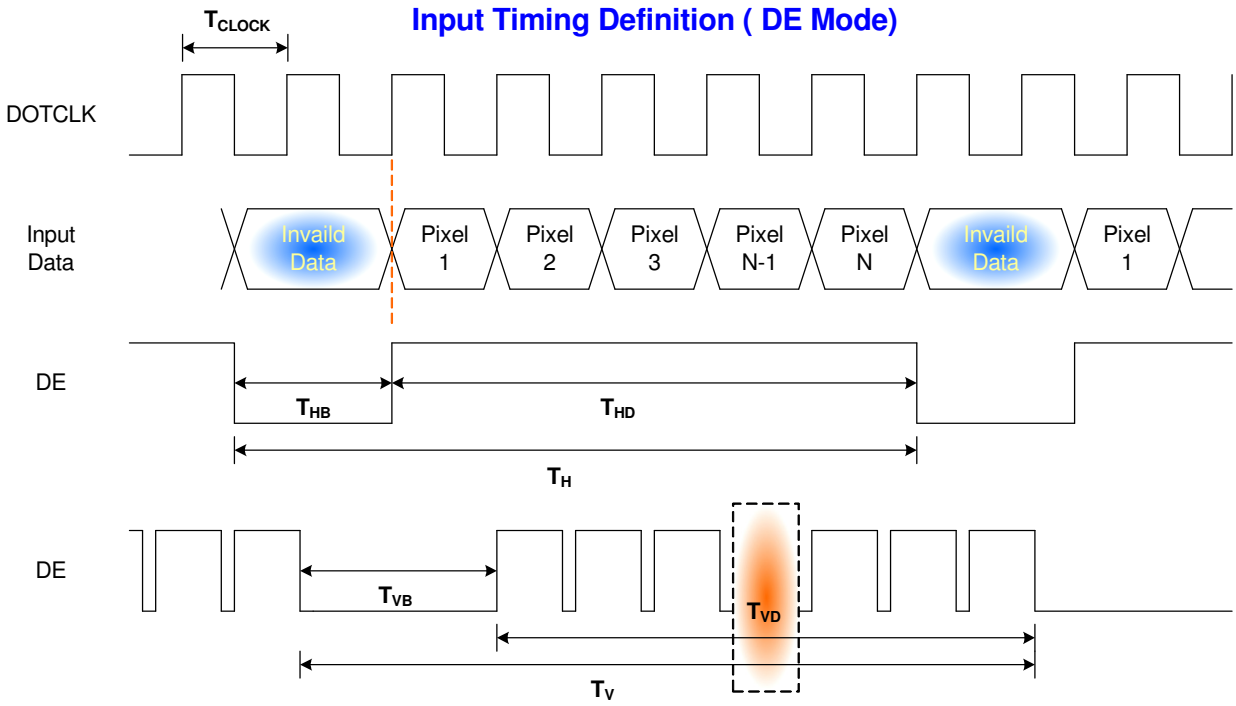

6.5 Power ON/OFF Sequence

Power on/off sequence is as follows. Interface signals and LED on/off sequence are also shown in the chart. Signals from any system shall be Hi-Z state or low level when VDD is off

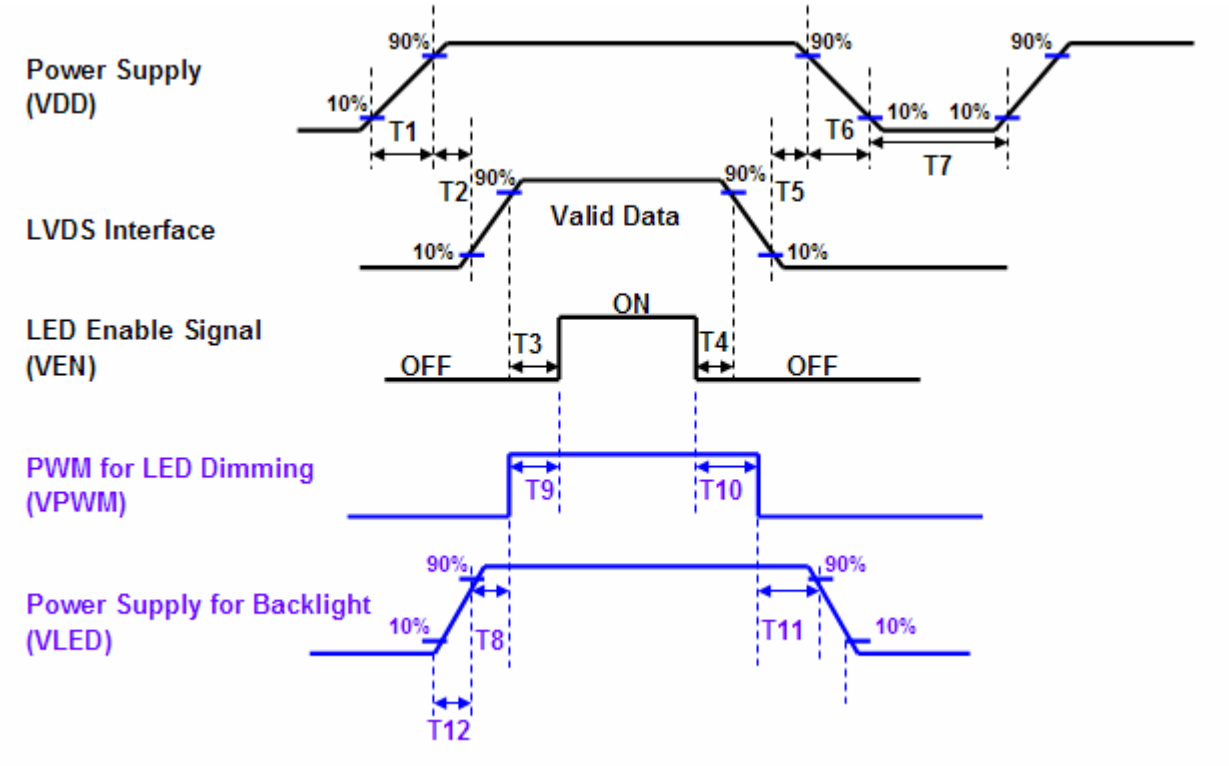

Power Sequence Timing			
Parameter	Value		Units
	Min.	Max.	
T1	0.5	10	ms
T2	0	50	
T3	200	-	
T4	200	-	
T5	0	50	
T6	0	10	
T7	500	-	
T8	10	-	
T9	0	180	
T10	0	180	
T11	10	-	
T12	0.5	10	

7. Panel Reliability Test

7.1 Vibration Test

Test Spec:

- Test method: Non-Operation
- Acceleration: 1.5 G
- Frequency: 10 - 500Hz Random
- Sweep: 30 Minutes each Axis (X, Y, Z)

7.2 Shock Test

Test Spec:

- Test method: Non-Operation
- Acceleration: 220 G , Half sine wave
- Active time: 2 ms
- Pulse: X,Y,Z .one time for each side

7.3 Reliability Test

Items	Required Condition	Note
Temperature Humidity Bias	Ta= 40℃, 90%RH, 300h	
High Temperature Operation	Ta= 50℃, Dry, 300h	
Low Temperature Operation	Ta= 0℃, 300h	
High Temperature Storage	Ta= 60℃, 35%RH, 300h	
Low Temperature Storage	Ta= -20℃, 50%RH, 250h	
Thermal Shock Test	Ta=-20℃to 60℃, Duration at 30 min, 100 cycles	
ESD	Contact : ±8 KV Air : ±15 KV	Note 1

Note1: According to EN 61000-4-2 , ESD class B: Some performance degradation allowed. Self-recoverable. No data lost, No hardware failures.

Remark: MTBF (Excluding the LED): 30,000 hours with a confidence level 90%

8. Mechanical Characteristics

8.1 LCM Outline Dimension

8.1.1 Standard Front View

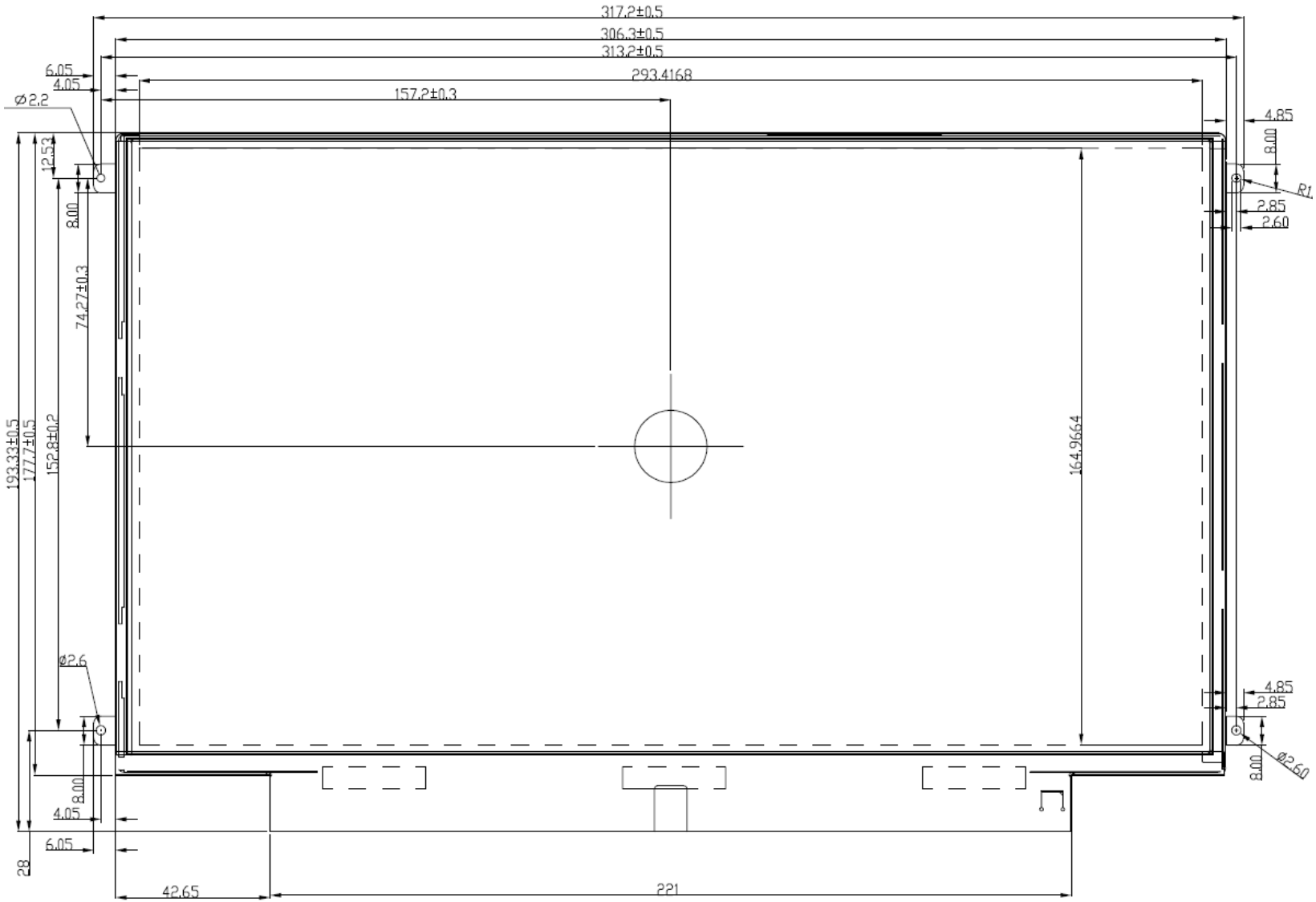

8.1.2 Standard Rear View

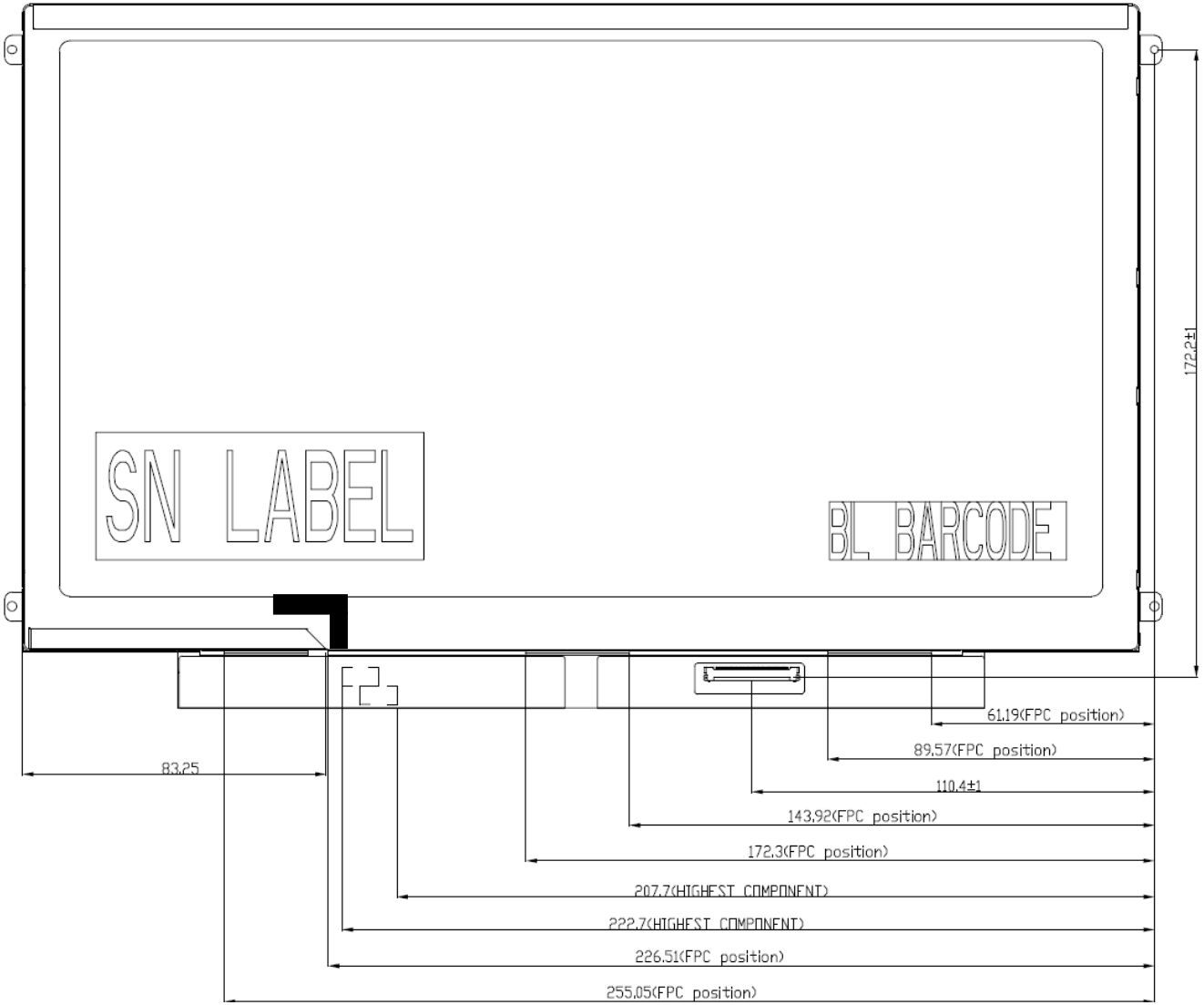

Note: Prevention IC damage, IC positions not allowed any overlap over these areas.

9. Shipping and Package

9.1 Shipping Label Format

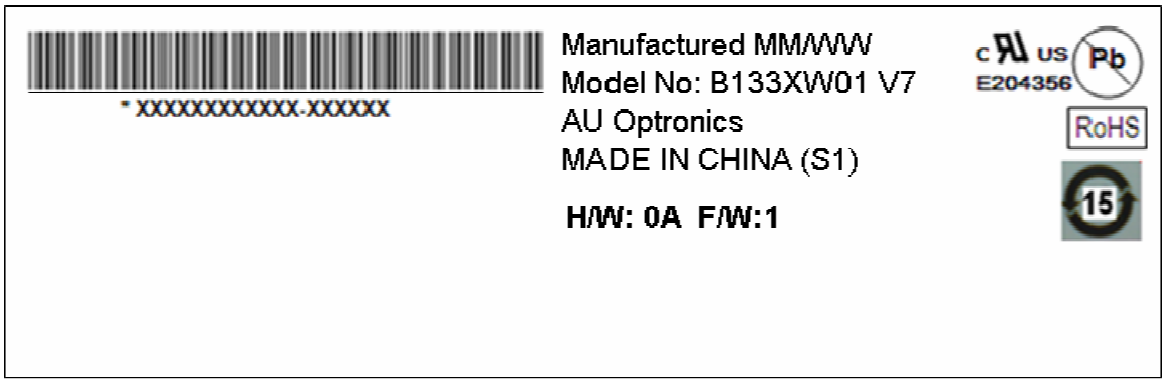

9.2 Carton Package

The outside dimension of carton is 455 (L)mm x 380 (W)mm x 355 (H)mm

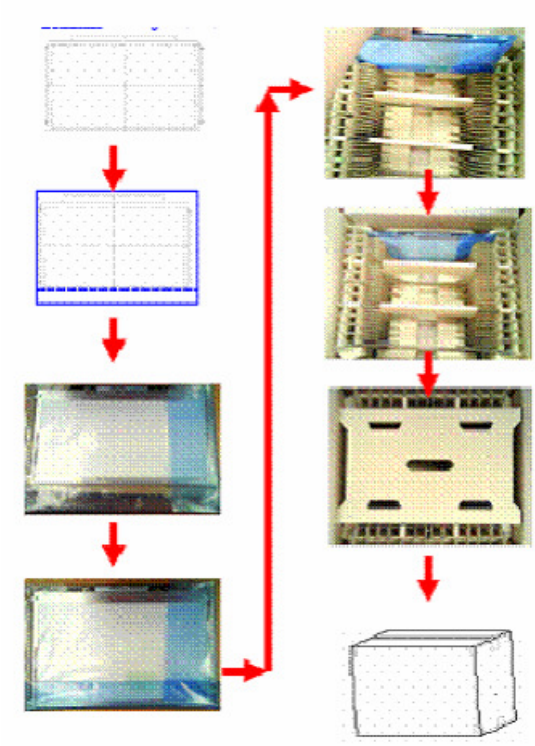

9.3 Shipping Package of Palletizing Sequence

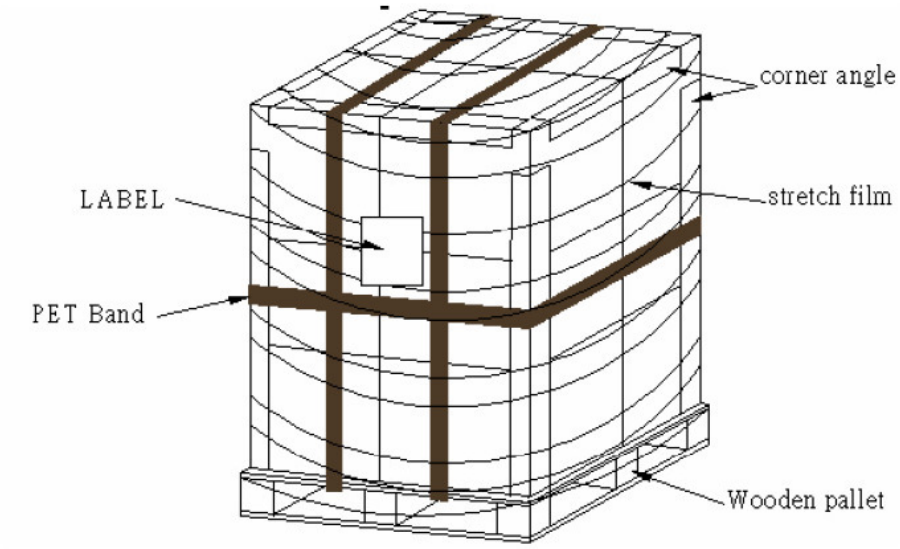

10. Appendix: EDID Description

Address	FUNCTION	Value	Value	Value	Note
HEX		HEX	BIN	DEC	
00	Header	00	00000000	0	
01		FF	11111111	255	
02		FF	11111111	255	
03		FF	11111111	255	
04		FF	11111111	255	
05		FF	11111111	255	
06		FF	11111111	255	
07		00	00000000	0	
08	EISA Manuf. Code LSB	06	00000110	6	
09	Compressed ASCII	AF	10101111	175	
0A	Product Code	2C	00101100	44	
0B	hex, LSB first	17	00010111	23	
0C	32-bit ser #	00	00000000	0	
0D		00	00000000	0	
0E		00	00000000	0	
0F		00	00000000	0	
10	Week of manufacture	01	00000001	1	
11	Year of manufacture	12	00010010	18	
12	EDID Structure Ver.	01	00000001	1	
13	EDID revision #	03	00000011	3	
14	**Video input def.** *(digital I/P, non-TMDS, CRGB)*	80	10000000	128	
15	**Max H image size** *(rounded to cm)*	1D	00011101	29	
16	**Max V image size** *(rounded to cm)*	10	00010000	16	
17	**Display Gamma** *(=(gamma*100)-100)*	78	01111000	120	
18	**Feature support** *(no DPMS, Active OFF, RGB, tmg Blk#1)*	0A	00001010	10	
19	Red/green low bits **(Lower 2:2:2:2 bits)**	05	00000101	5	
1A	Blue/white low bits **(Lower 2:2:2:2 bits)**	E5	11100101	229	
1B	Red x **(Upper 8 bits)**	97	10010111	151	
1C	Red y/ highER 8 bits	57	01010111	87	
1D	Green x	53	01010011	83	
1E	Green y	93	10010011	147	
1F	Blue x	27	00100111	39	
20	Blue y	22	00100010	34	
21	White x	50	01010000	80	
22	White y	54	01010100	84	
23	Established timing 1	00	00000000	0	
24	Established timing 2	00	00000000	0	
25	Established timing 3	00	00000000	0	
26	Standard timing #1	01	00000001	1	
27		01	00000001	1	
28	Standard timing #2	01	00000001	1	
29		01	00000001	1	
2A	Standard timing #3	01	00000001	1	

2B		01	00000001	1	
2C	Standard timing #4	01	00000001	1	
2D		01	00000001	1	
2E	Standard timing #5	01	00000001	1	
2F		01	00000001	1	
30	Standard timing #6	01	00000001	1	
31		01	00000001	1	
32	Standard timing #7	01	00000001	1	
33		01	00000001	1	
34	Standard timing #8	01	00000001	1	
35		01	00000001	1	
36	Pixel Clock/10000 LSB	12	00010010	18	
37	Pixel Clock/10000 USB	1B	00011011	27	
38	Horz active **Lower 8bits**	56	01010110	86	
39	Horz blanking **Lower 8bits**	5A	01011010	90	
3A	HorzAct:HorzBlnk **Upper 4:4 bits**	50	01010000	80	
3B	Vertical Active **Lower 8bits**	00	00000000	0	
3C	Vertical Blanking **Lower 8bits**	19	00011001	25	
3D	Vert Act : Vertical Blanking **(upper 4:4 bit)**	30	00110000	48	
3E	HorzSync. Offset	30	00110000	48	
3F	HorzSync.Width	20	00100000	32	
40	VertSync.Offset : VertSync.Width	36	00110110	54	
41	Horz&Vert Sync Offset/Width **Upper 2bits**	00	00000000	0	
42	Horizontal Image Size **Lower 8bits**	25	00100101	37	
43	Vertical Image Size **Lower 8bits**	A4	10100100	164	
44	Horizontal & Vertical Image Size **(upper 4:4 bits)**	10	00010000	16	
45	Horizontal Border *(zero for internal LCD)*	00	00000000	0	
46	Vertical Border *(zero for internal LCD)*	00	00000000	0	
47	Signal *(non-intr, norm, no stero, sep sync, neg pol)*	18	00011000	24	
48	Detailed timing/monitor	00	00000000	0	
49	descriptor #2	00	00000000	0	
4A		00	00000000	0	
4B		0F	00001111	15	
4C		00	00000000	0	
4D		00	00000000	0	
4E		00	00000000	0	
4F		00	00000000	0	
50		00	00000000	0	
51		00	00000000	0	
52		00	00000000	0	
53		00	00000000	0	
54		00	00000000	0	
55		00	00000000	0	
56		00	00000000	0	
57		00	00000000	0	
58		00	00000000	0	
59		20	00100000	32	

5A	Detailed timing/monitor	00	00000000	0	
5B	descriptor #3	00	00000000	0	
5C		00	00000000	0	
5D		FE	11111110	254	
5E		00	00000000	0	
5F	Manufacture	41	01000001	65	A
60	Manufacture	55	01010101	85	U
61	Manufacture	4F	01001111	79	O
62		0A	00001010	10	
63		20	00100000	32	
64		20	00100000	32	
65		20	00100000	32	
66		20	00100000	32	
67		20	00100000	32	
68		20	00100000	32	
69		20	00100000	32	
6A		20	00100000	32	
6B		20	00100000	32	
6C	Detailed timing/monitor	00	00000000	0	
6D	descriptor #4	00	00000000	0	
6E		00	00000000	0	
6F		FE	11111110	254	
70		00	00000000	0	
71	Manufacture P/N	42	01000010	66	B
72	Manufacture P/N	31	00110001	49	1
73	Manufacture P/N	33	00110011	51	3
74	Manufacture P/N	33	00110011	51	3
75	Manufacture P/N	58	01011000	88	X
76	Manufacture P/N	57	01010111	87	W
77	Manufacture P/N	30	00110000	48	0
78	Manufacture P/N	31	00110001	49	1
79	Manufacture P/N	20	00100000	32	
7A	Manufacture P/N	56	01010110	86	V
7B	Manufacture P/N	37	00110111	55	7
7C		20	00100000	32	
7D		0A	00001010	10	
7E	Extension Flag	00	00000000	0	
7F	Checksum	26	00100110	38	
			SUM	5632	