( ) Preliminary Specifications
( V) Final Specifications

| | |
|---|---|
| **Module** | 15.4” WXGA+ Color TFT-LCD |
| **Model Name** | B154EW01 V4 |
| **Dell P/N** | CD514 |
| **Inverter** | Foxconn+Maxim |

| **Customer** | **Date** | **Approved by** | **Date** |
|---|---|---|---|
| | | Joselyn Liu | 2006/06/21 |
| **Checked & Approved by** | | **Prepared by** | |
| | | Jerry Chen/Ivy Lee | 2006/06/21 |
| Note: This Specification is subject to change without notice. | | MDBU Marketing Division / AU Optronics corporation | |

# Contents

**1. Handling Precautions ..... 4**
**2. General Description ..... 5**
2.1 General Specification ..... 5
2.2 Optical Characteristics ..... 6
**3. Functional Block Diagram ..... 11**
**4. Absolute Maximum Ratings ..... 12**
4.1 Absolute Ratings of TFT LCD Module ..... 12
4.2 Absolute Ratings of Backlight Unit ..... 12
4.3 Absolute Ratings of Environment ..... 12
**5. Electrical characteristics ..... 13**
5.1 TFT LCD Module ..... 13
5.2 Backlight Unit ..... 15
5.3 Inverter Characteristic ..... 17
**6. Signal Characteristic ..... 18**
6.1 Pixel Format Image ..... 18
6.2 The input data format ..... 19
6.3 Signal Description/Pin Assignment ..... 20
6.4 Interface Timing ..... 22
**7. Connector Description ..... 25**
7.1 TFT LCD Module ..... 25
7.2 Backlight Unit ..... 25
7.3 Signal for Lamp connector ..... 25
**8. Vibration and Shock Test (Stand alone) ..... 26**
8.1 Vibration Test ..... 26
8.2 Shock Test Spec: ..... 26
**9. Reliability ..... 27**
**10. Mechanical Characteristics ..... 28**
10.1 LCM Outline Dimension ..... 28
10.2 Screw Hole Depth and Center Position ..... 29
**11. Shipping and Package ..... 30**
11.1 Shipping Label Format ..... 30
11.2. Carton package ..... 31
11.3 Shipping package of palletizing sequence ..... 31
**12. Appendix: EDID description ..... 32**

# Record of Revision

| Version and Date | Page | Old description | New Description | Remark |
|---|---|---|---|---|
| 0.1 2005/08/01 | All | First Edition for Customer | | |
| 0.2 2005/08/15 | 18 | | Update Inverter Characteristic Spec. | |
| 0.3 2006/01/09 | 33 | | Update EDID description | |
| 04 2006/06021 | All | | Product format chnage | |

## 1. Handling Precautions

1) Since front polarizer is easily damaged, pay attention not to scratch it.
2) Be sure to turn off power supply when inserting or disconnecting from input connector.
3) Wipe off water drop immediately. Long contact with water may cause discoloration or spots.
4) When the panel surface is soiled, wipe it with absorbent cotton or other soft cloth.
5) Since the panel is made of glass, it may break or crack if dropped or bumped on hard surface.
6) Since CMOS LSI is used in this module, take care of static electricity and insure human earth when handling.
7) Do not open nor modify the Module Assembly.
8) Do not press the reflector sheet at the back of the module to any directions.
9) In case if a Module has to be put back into the packing container slot after once it was taken out from the container, do not press the center of the CCFL Reflector edge. Instead, press at the far ends of the CFL Reflector edge softly. Otherwise the TFT Module may be damaged.
10) At the insertion or removal of the Signal Interface Connector, be sure not to rotate nor tilt the Interface Connector of the TFT Module.
11) After installation of the TFT Module into an enclosure (Notebook PC Bezel, for example), do not twist nor bend the TFT Module even momentary. At designing the enclosure, it should be taken into consideration that no bending/twisting forces are applied to the TFT Module from outside. Otherwise the TFT Module may be damaged.
12) Cold cathode fluorescent lamp in LCD contains a small amount of mercury. Please follow local ordinances or regulations for disposal.
13) Small amount of materials having no flammability grade is used in the LCD module. The LCD module should be supplied by power complied with requirements of Limited Power Source(, IEC60950 or UL1950), or be applied exemption.
14) The LCD module is designed so that the CCFL in it is supplied by Limited Current Circuit(IEC60950 or UL1950). Do not connect the CCFL in Hazardous Voltage Circuit.

## 2. General Description

B154EW01 V4 is a Color Active Matrix Liquid Crystal Display composed of a TFT LCD panel, a driver circuit, and backlight system. The screen format is intended to support the WXGA (1280(H) x 800(V)) screen and 262k colors (RGB 6-bits data driver). All input signals are LVDS interface compatible. Inverter of backlight is not included.

B154EW01 V4 is designed for a display unit of notebook style personal computer and industrial machine.

### 2.1 General Specification

The following items are characteristics summary on the table at 25 ℃ condition:

| Items | Unit | Specifications |
|---|---|---|
| Screen Diagonal | [mm] | 391 (15.4W") |
| Active Area | [mm] | 331.2 X 207.0 |
| Pixels H x V | | 1280x3(RGB) x 800 |
| Pixel Pitch | [mm] | 0.2588X0.2588 |
| Pixel Arrangement | | R.G.B. Vertical Stripe |
| Display Mode | | Normally White |
| White Luminance ($I_{CCFL}$=6.0mA)<br>Note: $I_{CCFL}$ is lamp current | [cd/m$^2$] | 160 typ. (5 points average)<br>150 min. (5 points average)<br>(Note1) |
| Luminance Uniformity | | 1.25 max. (5 points) |
| Contrast Ratio | | 400 typ |
| Optical Rise Time/Fall Time | [msec] | 4/12 typ. |
| Nominal Input Voltage VDD | [Volt] | +3.3 typ. |
| Power Consumption | [Watt] | 6.5 max.(without inverter) |
| Weight(w/o Inverter) | [Grams] | 585 max. |
| Physical Size | [mm] | 344.0 typ. x 222.0 typ. x 6.5 max. |
| Electrical Interface | | 1 channel LVDS |
| Surface Treatment | | Anti-glare, Hardness 3H,<br>Haze 44%, Reflectance 4.3% |
| Support Color | | 262K colors ( RGB 6-bit ) |

| | | |
|---|---|---|
| Temperature Range<br>Operating<br>Storage (Non-Operating) | <br>[°C]<br>[°C] | <br>0 to +50<br>-20 to +60 |
| RoHS Compliance | | RoHS Compliance |

## 2.2 Optical Characteristics

The optical characteristics are measured under stable conditions at 25℃ (Room Temperature):

| Item | Unit | Conditions | Min. | Typ. | Max. | Note |
|---|---|---|---|---|---|---|
| White Luminance<br>$I_{CCFL}$=6.0mA | [cd/m²] | 5 points average | 150 | 160 | - | 1, 4, 5. |
| Viewing Angle | [degree]<br>[degree] | Horizontal (Right)<br>CR = 10 (Left) | -<br>- | 40<br>40 | -<br>- | 9 |
| | [degree]<br>[degree] | Vertical (Upper)<br>CR = 10 (Lower) | -<br>- | 10<br>30 | -<br>- | |
| Luminance Uniformity | | 5 Points | | | 1.25 | 1 |
| Luminance Uniformity | | 13 Points | | | 1.50 | 2 |
| CR: Contrast Ratio | | | 300 | 400 | - | 6 |
| Cross talk | % | | | | 4 | 7 |
| Response Time | [msec] | Rising | - | 4 | 8 | 8 |
| | [msec] | Falling | - | 12 | 17 | |
| | [msec] | Rising + Falling | | 16 | 25 | |
| Color / Chromaticity Coordinates (CIE 1931) | | Red x | 0.570 | 0.600 | 0.630 | 2,8 |
| | | Red y | 0.300 | 0.340 | 0.370 | |
| | | Green x | 0.280 | 0.310 | 0.340 | |
| | | Green y | 0.530 | 0.560 | 0.590 | |
| | | Blue x | 0.120 | 0.150 | 0.180 | |
| | | Blue y | 0.085 | 0.115 | 0.145 | |
| | | White x | 0.290 | 0.313 | 0.343 | |
| | | White y | 0.299 | 0.329 | 0.359 | |

Note 1: 5 points position (Display area : 331.2mm x 207.0mm)

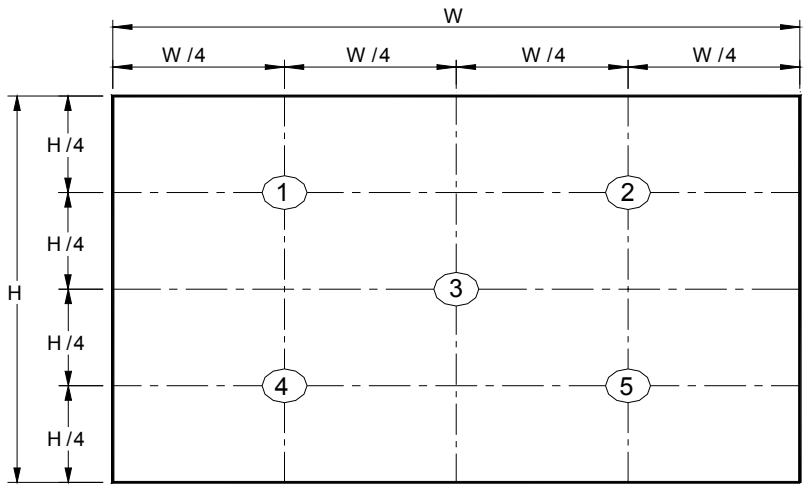


Note 2: 13 points position

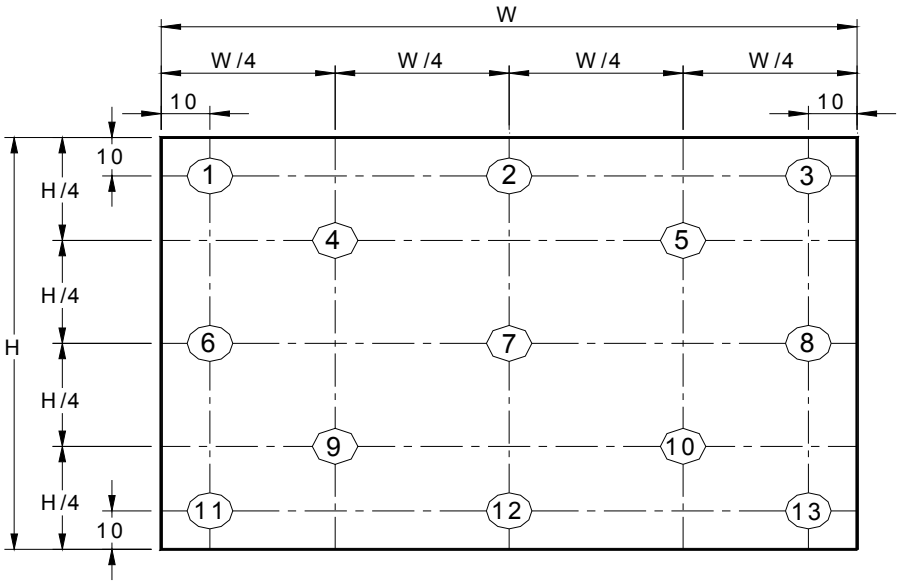


Note 3: The luminance uniformity of 5 and 13 points is defined by dividing the maximum luminance values by the minimum test point luminance

$$\delta_{W5} = \frac{\text{Maximum Brightness of five points}}{\text{Minimum Brightness of five points}}$$

$$\delta_{W13} = \frac{\text{Maximum Brightness of thirteen points}}{\text{Minimum Brightness of thirteen points}}$$

Note 4: Measurement method

The LCD module should be stabilized at given temperature for 30 minutes to avoid abrupt temperature change during measuring. In order to stabilize the luminance, the measurement should be executed after lighting Backlight for 30 minutes in a stable, windless and dark room.

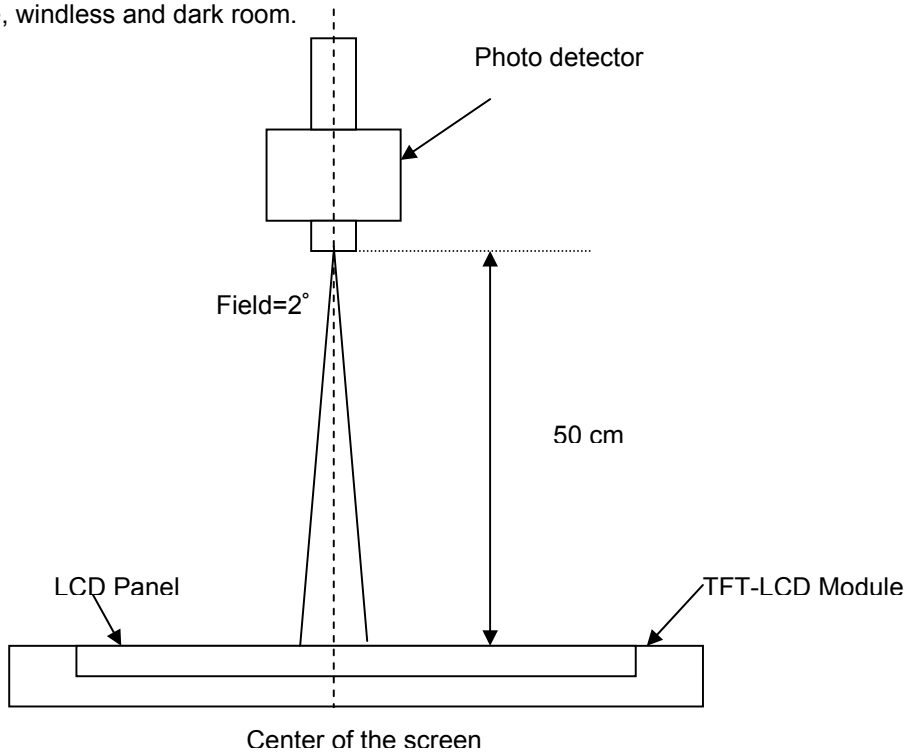


Note 5： Definition of Average Luminance of White ($Y_L$):

Measure the luminance of gray level 63 at 5 points，$Y_L$ = [L (1)+ L (2)+ L (3)+ L (4)+ L (5)] / 5

L (x) is corresponding to the luminance of the point X at Figure in Note (1).

Note 6： Definition of contrast ratio:

Contrast ratio is calculated with the following formula.

$$\text{Contrast ratio (CR)} = \frac{\text{Brightness on the “White” state}}{\text{Brightness on the “Black” state}}$$

Note 7： Definition of Cross Talk (CT)

$CT = | Y_B – Y_A | / Y_A \times 100$ (%)

Where

$Y_A$ = Luminance of measured location without gray level 0 pattern (cd/m2)

$Y_B$ = Luminance of measured location with gray level 0 pattern (cd/m2)

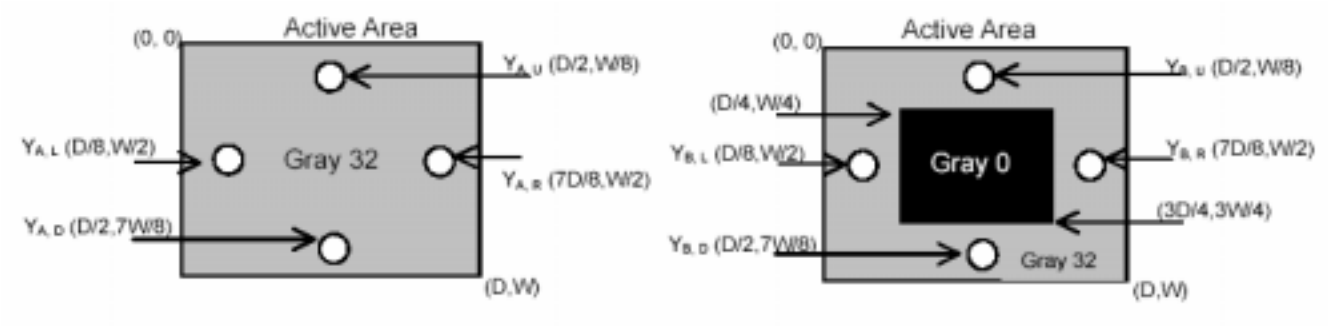


Note 8: Definition of response time:

The output signals of BM-7 or equivalent are measured when the input signals are changed from “Black” to “White” (falling time) and from “White” to “Black” (rising time), respectively. The response time interval between the 10% and 90% of amplitudes. Refer to figure as below.

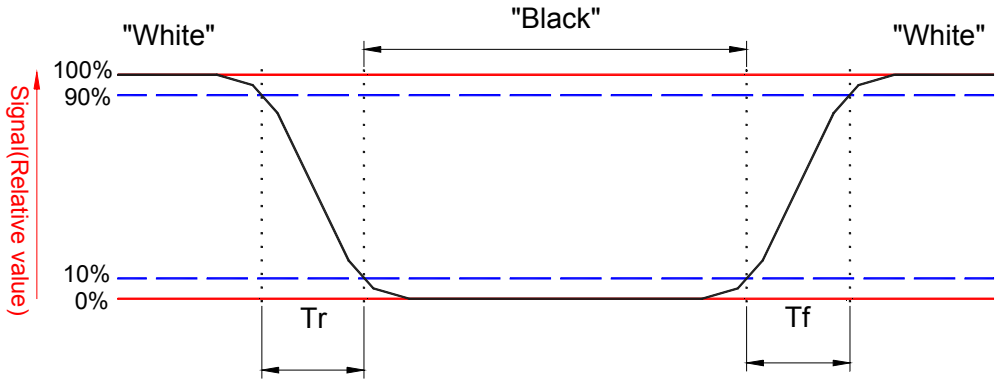

Note 9. Definition of viewing angle

Viewing angle is the measurement of contrast ratio ≧10, at the screen center, over a 180° horizontal and 180° vertical range (off-normal viewing angles). The 180° viewing angle range is broken down as follows; 90° ( $\theta$ ) horizontal left and right and 90° ( $\Phi$ ) vertical, high (up) and low (down). The measurement direction is typically perpendicular to the display surface with the screen rotated about its center to develop the desired measurement viewing angle.

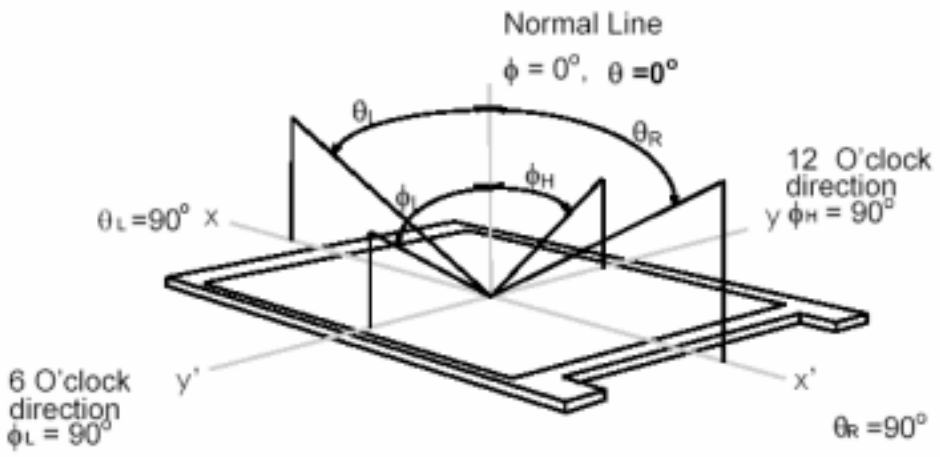

## 3. Functional Block Diagram

The following diagram shows the functional block of the 15.4 inches wide Color TFT/LCD Module:

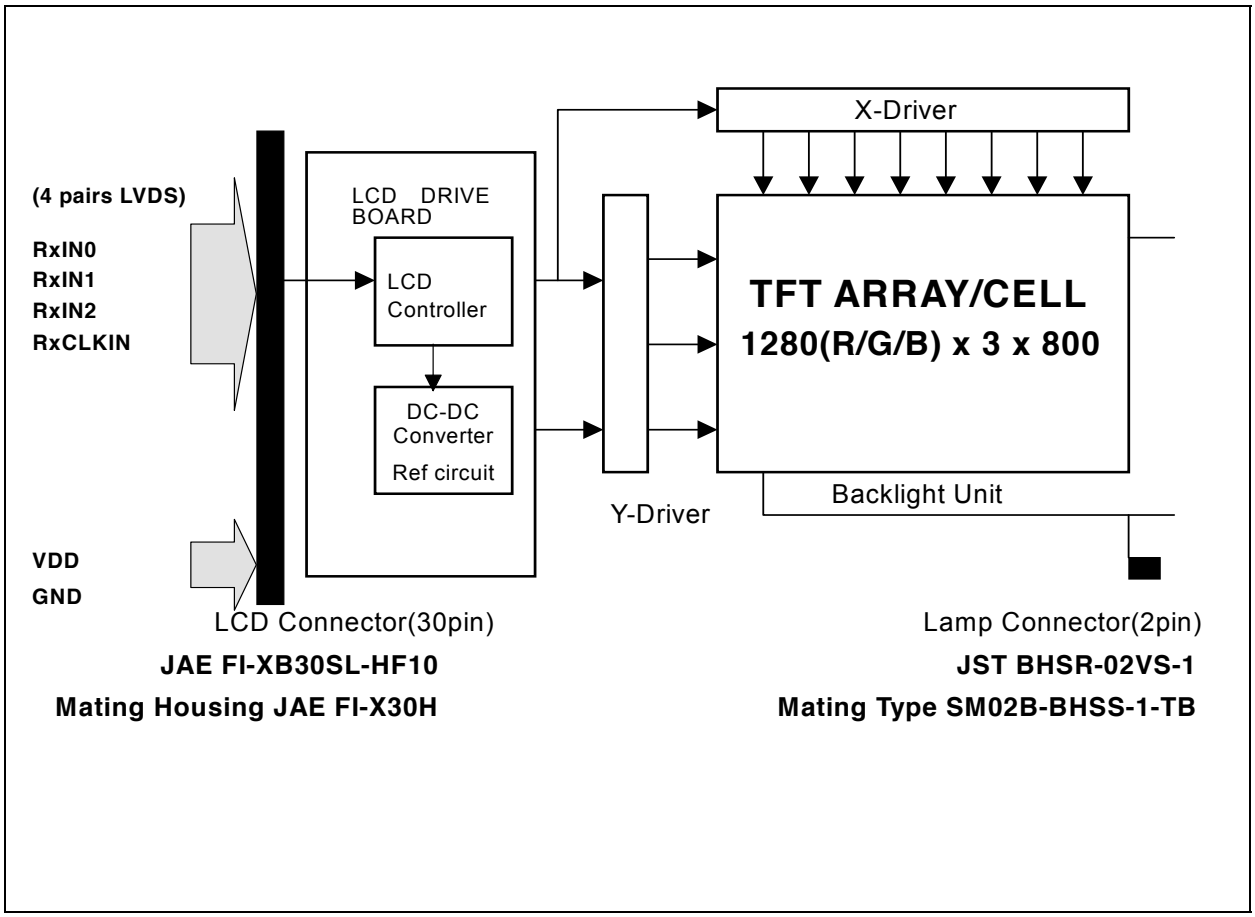

# 4. Absolute Maximum Ratings

Absolute maximum ratings of the module is as following:

## 4.1 Absolute Ratings of TFT LCD Module

| Item | Symbol | Min | Max | Unit | Conditions |
|---|---|---|---|---|---|
| Logic/LCD Drive Voltage | Vin | -0.3 | +4.0 | [Volt] | Note 1,2 |

## 4.2 Absolute Ratings of Backlight Unit

| Item | Symbol | Min | Max | Unit | Conditions |
|---|---|---|---|---|---|
| CCFL Current | ICCFL | - | 6.5 | [mA] rms | Note 1,2 |

## 4.3 Absolute Ratings of Environment

| Item | Symbol | Min | Max | Unit | Conditions |
|---|---|---|---|---|---|
| Operating Temperature | TOP | 0 | +50 | [°C] | Note 3 |
| Operation Humidity | HOP | 5 | 95 | [%RH] | Note 3 |
| Storage Temperature | TST | -20 | +60 | [°C] | Note 3 |
| Storage Humidity | HST | 5 | 95 | [%RH] | Note 3 |

Note 1: At Ta (25℃ )

Note 2: Permanent damage to the device may occur if exceed maximum values

Note 3: For quality performance, please refer to AUO IIS(Incoming Inspection Standard).

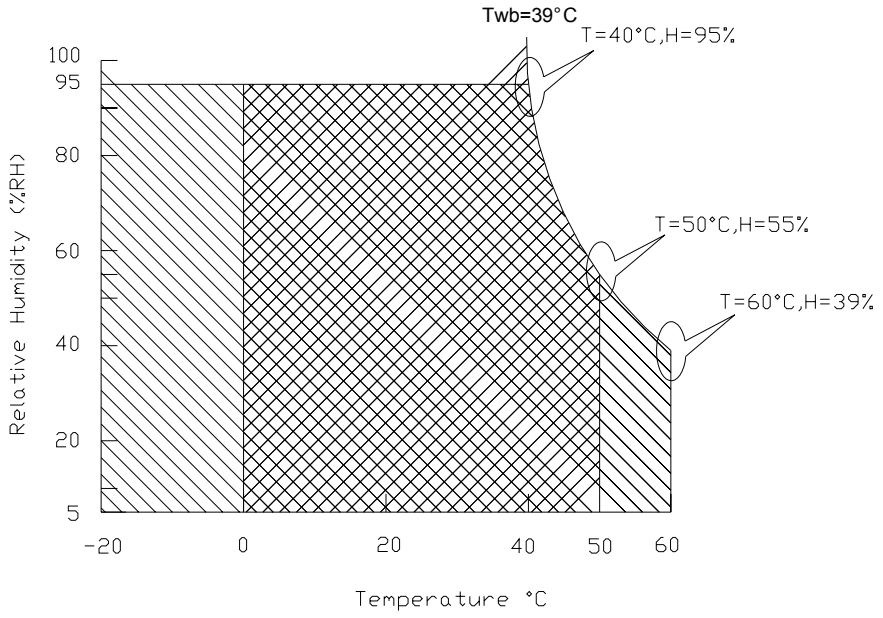


Operating Range Storage Range +

# 5. Electrical characteristics

## 5.1 TFT LCD Module

### 5.1.1 Power Specification

Input power specifications are as follows;

| Symble | Parameter | Min | Typ | Max | Units | Note |
|---|---|---|---|---|---|---|
| VDD | Logic/LCD Drive Voltage | 3.0 | 3.3 | 3.6 | [Volt] | |
| PDD | VDD Power | | | 2 | [Watt] | Note 1 |
| IDD | IDD Current | | 500 | 600 | [mA] | Note 1 |
| IRush | Inrush Current | | | 2000 | [mA] | Note 2 |
| VDDrp | Allowable Logic/LCD Drive Ripple Voltage | | | 100 | [mV] p-p | |

Note 1 : Maximum Measurement Condition：Black Patterm

Note 2：Measure Condition

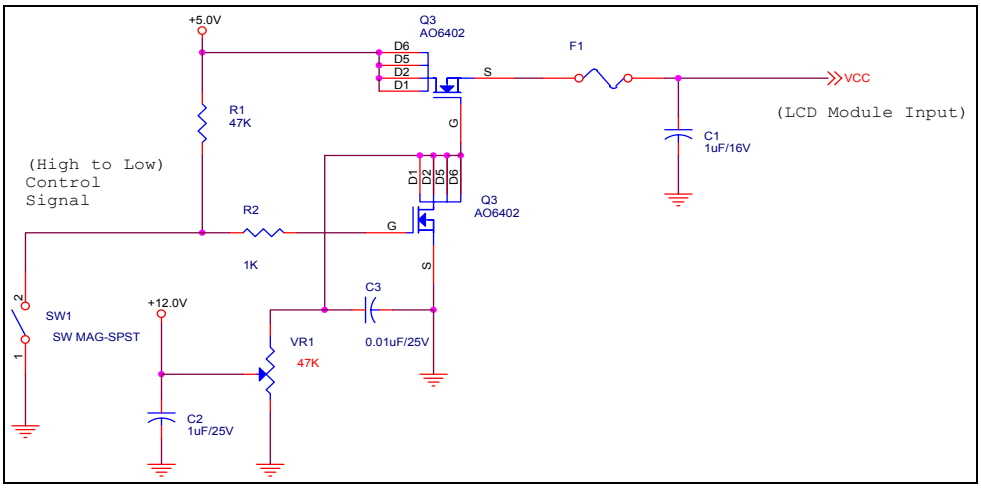


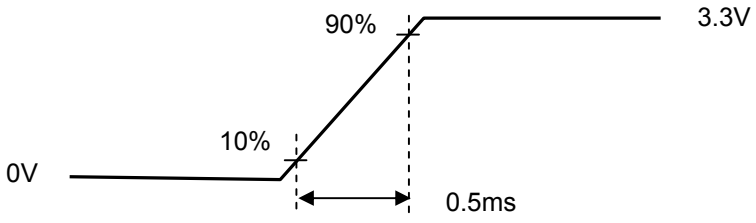


**Vin rising time**

### 5.1.2 Signal Electrical Characteristics

Input signals shall be low or High-impedance state when VDD is off.

It is recommended to refer the specifications of THC63LVDF84A(Thine Electronics Inc.) in detail.

Signal electrical characteristics are as follows;

| Parameter | Condition | Min | Max | Unit |
|---|---|---|---|---|
| Vth | Differential Input High Threshold (Vcm=+1.2V) | | 100 | [mV] |
| Vtl | Differential Input Low Threshold (Vcm=+1.2V) | -100 | | [mV] |
| Vcm | Differential Input Common Mode Voltage | 1.125 | 1.375 | [V] |

Note: LVDS Signal Waveform

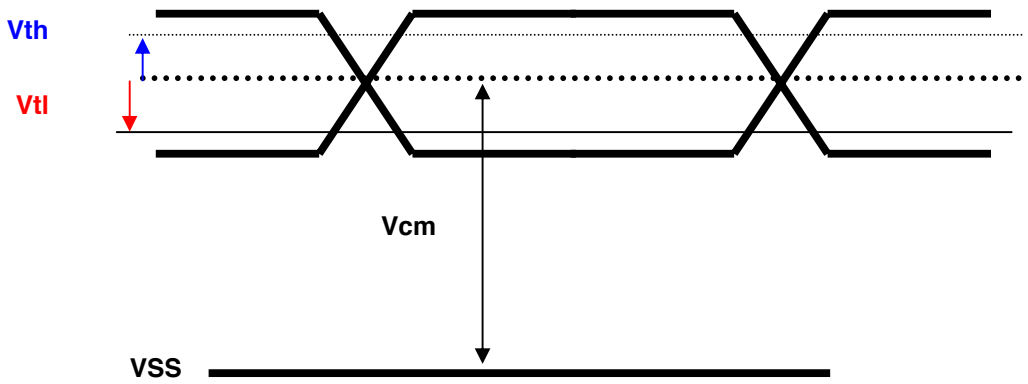

## 5.2 Backlight Unit

Parameter guideline for CCFL Inverter

| Parameter | Min | Typ | Max | Units | Condition |
|---|---|---|---|---|---|
| White Luminance<br>5 points average | - | 160 | - | [cd/m$^2$] | (Ta=25℃) |
| CCFL current($I_{CCFL}$) | 3.0 | 6.0 | 6.5 | [mA] rms | (Ta=25℃)<br>Note 2 |
| CCFL Frequency($F_{CCFL}$) | 50 | 62 | 70 | [KHz] | (Ta=25℃)<br>Note 3,4 |
| CCFL Ignition Voltage(Vs) | 1430 | | | [Volt] rms | (Ta= 0℃)<br>Note 5 |
| CCFL Ignition Voltage(Vs) | 1190 | | | [Volt] rms | (Ta= 25℃)<br>Note 5 |
| CCFL Voltage (Reference)<br>($V_{CCFL}$) | 648 | 720 | 792 | [Volt] rms | (Ta=25℃)<br>Note 6 |
| CCFL Power consumption<br>($P_{CCFL}$) | - | 4.30 | 4.50 | [Watt] | (Ta=25℃)<br>Note 6 |

Note 1: Typ are AUO recommended Design Points.

*1 All of characteristics listed are measured under the condition using the AUO Test inverter.

*2 In case of using an inverter other than listed, it is recommended to check the inverter carefully. Sometimes, interfering noise stripes appear on the screen, and substandard luminance or flicker at low power may happen.

*3 In designing an inverter, it is suggested to check safety circuit very carefully. Impedance of CCFL, for instance, becomes more than 1 [M ohm] when CFL is damaged.

*4 Generally, CCFL has some amount of delay time after applying kick-off voltage. It is recommended to keep on applying kick-off voltage for 1 [Sec] until discharge.

*5 CCFL discharge frequency must be carefully chosen so as not to produce interfering noise stripes on the screen.

*6 Reducing CCFL current increases CCFL discharge voltage and generally increases CCFL discharge frequency. So all the parameters of an inverter should be carefully designed so as not to produce too much leakage current from high-voltage output of the inverter.

Note 2: It should be employed the inverter which has “Duty Dimming”, if ICCFL is less than 4mA.

Note 3: CCFL discharge frequency should be carefully determined to avoid interference between inverter and TFT LCD.

Note 4: The frequency range will not affect to lamp life and reliability characteristics.

Note 5: CCFL inverter should be able to give out a power that has a generating capacity of over 1,430 voltage. Lamp units need 1,400 voltage minimum for ignition.

Note 6: Calculator value for reference ($I_{CCFL} \times V_{CCFL} = P_{CCFL}$)

Note 7: Requirements for a system inverter design, which is intended to have a better display performance, a better power efficiency and a more reliable lamp, are following.

It shall help increase the lamp lifetime and reduce leakage current.

a. The asymmetry rate of the inverter waveform should be less than 10%.

b. The distortion rate of the waveform should bewithin $\sqrt{2} \pm 10\%$.

* Inverter output waveform had better be more similar to ideal sine wave.

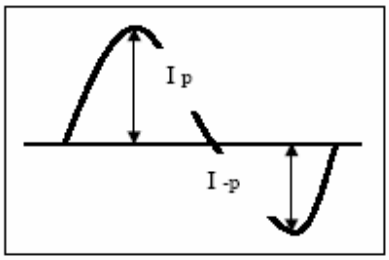


* Asymmetry rate:

$| I_p - I_{-p} | / I_{rms} * 100\%$

* Distortion rate

$I_p$ (or $I_{-p}$) / $I_{rms}$

## 5.3 Inverter Characteristic

Electrical Characteristics : Vin= 7.5V~21V, Ta=25℃

| No. | Item | Symbol | Condition | Min. | Typ. | Max. | Unit |
|---|---|---|---|---|---|---|---|
| 1 | Input Voltage | INV_SRC | - | 7.5 | 14.0 | 21.0 | V |
| 2 | Input Voltage | 5VALW | - | 4.85 | - | 5.20 | V |
| 3 | Input Current | Iin | Vin=14.0V, max. output | - | 0.420 | - | A |
| 4 | Input Power | Pin | Vin=14.0V, Iout=6.5mA | - | - | 6.20 | W |
| 5 | Backlight ON/OFF Control(1) | ON | Enable the inverter | 2.0 | - | 5.25 | V |
| | | OFF | Disable the inverter | -0.3 | - | 0.8 | V |
| 6 | SMBus Mode Brightness Adjust | SMB_DAT | Min. output: 00H<br>Max. output: FFH | 00 | - | FF | Hex. |
| 7 | DPST mode (System side PWM input) | PWM(Hz) | - | - | 10 | - | KHz |
| | | PWM Voltage | - | 3.135 | 3.30 | 3.465 | V |
| | | Signal intensity | - | 00 | - | FF | Hex |
| 8 | Output Voltage | Vout | Max. output | - | 700 | - | Vrms |
| 9 | Output Current | Iout (Min) | Ta=25℃, after running 30 min. | 1.2 | 1.5 | 1.8 | mArms |
| | | Iout (Max) | | 6.3 | 6.5 | 6.8 | mArms |
| 10 | Frequency | Freq | Max. output | 45 | 55 | 65 | KHz |
| 11 | Output Power | Pout | Vin=14.0V, Iout(Max) | - | 4.96 | - | W |
| 12 | Burst Mode Frequency | $f_B$ | | - | 200 | - | Hz |
| 13 | Ambient Light input signal | | | 5 | - | 1000 | Lux |
| 14 | Open Lamp Voltage(2) | Vopen | No Load | 1400 | - | - | Vrms |
| 15 | Striking Time | Ts | No Load | 0.6 | 1.0 | 1.4 | Sec |
| 16 | Efficiency | η | Vin=7.5V, Max. output, Load=100K | - | 80 | - | % |
| 17 | Start –up time | | | - | - | 0.1 | Sec |

# 6. Signal Characteristic

## 6.1 Pixel Format Image

Following figure shows the relationship of the input signals and LCD pixel format.

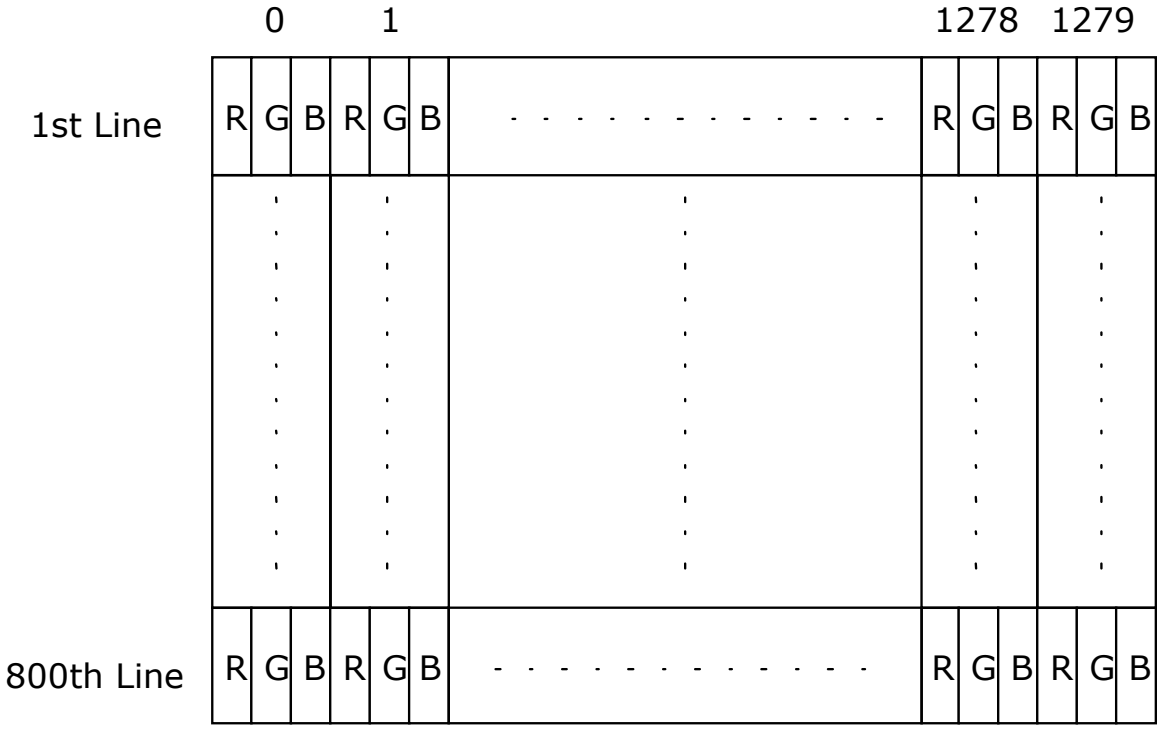

## 6.2 The input data format

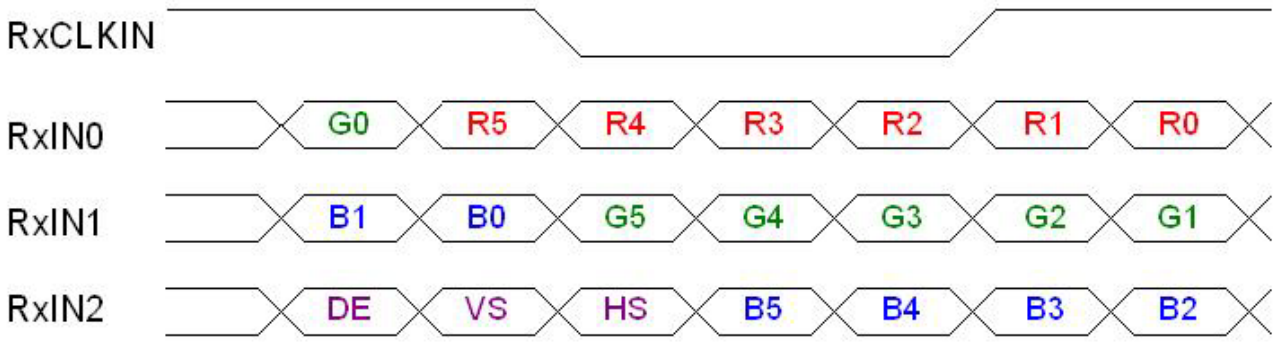


| Signal Name | Description | |
|---|---|---|
| R5<br>R4<br>R3<br>R2<br>R1<br>R0 | Red Data 5 (MSB)<br>Red Data 4<br>Red Data 3<br>Red Data 2<br>Red Data 1<br>Red Data 0 (LSB)<br><br>Red-pixel Data | Red-pixel Data<br>Each red pixel's brightness data consists of these 6 bits pixel data. |
| G5<br>G4<br>G3<br>G2<br>G1<br>G0 | Green Data 5 (MSB)<br>Green Data 4<br>Green Data 3<br>Green Data 2<br>Green Data 1<br>Green Data 0 (LSB)<br><br>Green-pixel Data | Green-pixel Data<br>Each green pixel's brightness data consists of these 6 bits pixel data. |
| B5<br>B4<br>B3<br>B2<br>B1<br>B0 | Blue Data 5 (MSB)<br>Blue Data 4<br>Blue Data 3<br>Blue Data 2<br>Blue Data 1<br>Blue Data 0 (LSB)<br><br>Blue-pixel Data | Blue-pixel Data<br>Each blue pixel's brightness data consists of these 6 bits pixel data. |
| RxCLKIN | Data Clock | The typical frequency is 68.9 MHZ.. The signal is used to strobe the pixel data and DE signals. All pixel data shall be valid at the falling edge when the DE signal is high. |
| DE | Display Timing | This signal is strobed at the falling edge of RxCLKIN. When the signal is high, the pixel data shall be valid to be displayed. |
| VS | Vertical Sync | The signal is synchronized to RxCLKIN . |
| HS | Horizontal Sync | The signal is synchronized to RxCLKIN . |

Note: Output signals from any system shall be low or High-impedance state when VDD is off.

## 6.3 Signal Description/Pin Assignment

LVDS is a differential signal technology for LCD interface and high speed data transfer device.

| PIN# | Signal Name | Description |
|---|---|---|
| 1 | GND | Ground |
| 2 | VDD | +3.3V Power Supply |
| 3 | VDD | +3.3V Power Supply |
| 4 | $V_{EDID}$ | +3.3V EDID Power |
| 5 | NC | No Connection (Reserve for AUO test) |
| 6 | $CLK_{EDID}$ | EDID Clock Input |
| 7 | $DATA_{EDID}$ | EDID Data Input |
| 8 | RxIN0- | LVDS differential data input(R0-R5, G0) |
| 9 | RxIN0+ | LVDS differential data input(R0-R5, G0) |
| 10 | GND | Ground |
| 11 | RxIN1- | LVDS differential data input(G1-G5, B0-B1) |
| 12 | RxIN1+ | LVDS differential data input(G1-G5, B0-B1) |
| 13 | GND | Ground |
| 14 | RxIN2- | LVDS differential data input(B2-B5, HS, VS, DE) |
| 15 | RxIN2+ | LVDS differential data input(B2-B5, HS, VS, DE) |
| 16 | GND | Ground |
| 17 | RxCLKIN- | LVDS differential clock input |
| 18 | RxCLKIN+ | LVDS differential clock input |
| 19 | GND | Ground |
| 20 | GND | Ground |
| 21 | NC | No Connection (Reserve for AUO test) |
| 22 | NC | No Connection (Reserve for AUO test) |
| 23 | NC | No Connection (Reserve for AUO test) |
| 24 | NC | No Connection (Reserve for AUO test) |
| 25 | NC | No Connection (Reserve for AUO test) |
| 26 | NC | No Connection (Reserve for AUO test) |
| 27 | NC | No Connection (Reserve for AUO test) |
| 28 | NC | No Connection (Reserve for AUO test) |
| 29 | NC | No Connection (Reserve for AUO test) |
| 30 | NC | No Connection (Reserve for AUO test) |

Note1: Start from right side

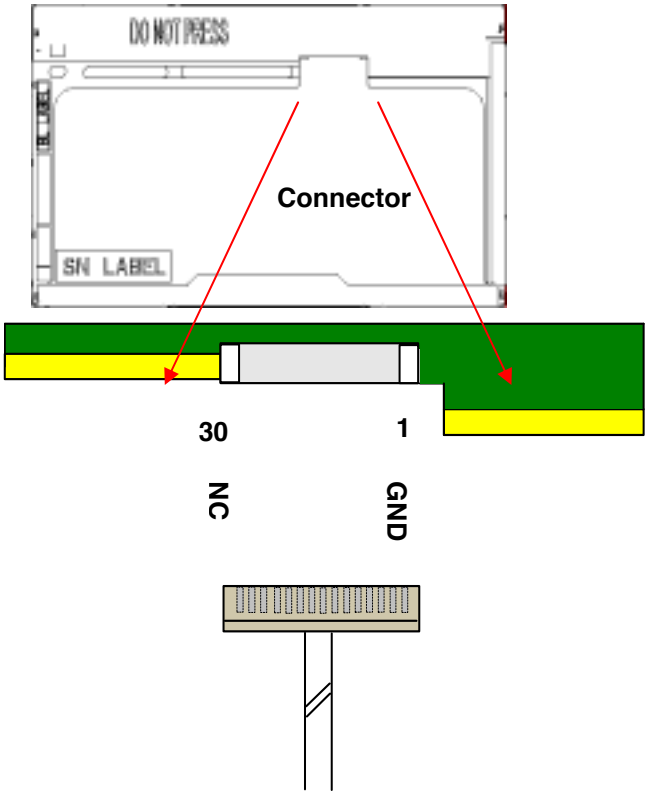


Note2: Input signals shall be low or High-impedance state when VDD is off.
internal circuit of LVDS inputs are as following.
The module uses a 100ohm resistor between positive and negative data lines of each receiver input

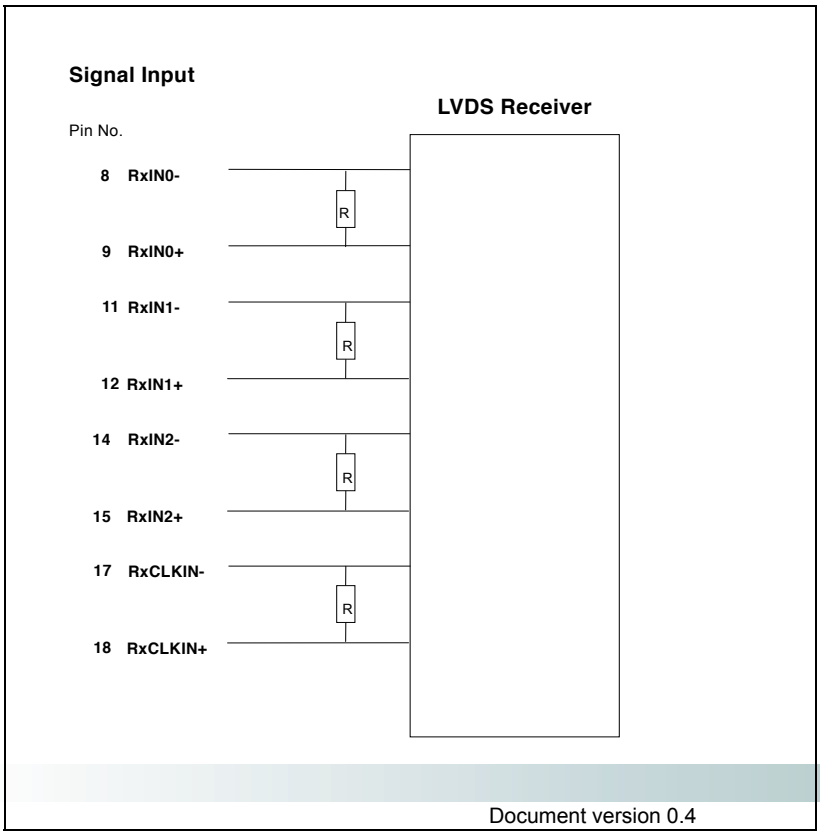

## 6.4 Interface Timing

### 6.4.1 Timing Characteristics

Basically, interface timings should match the 1280x800 /60Hz manufacturing guide line timing.

| Parameter | | Symbol | Min. | Typ. | Max. | Unit |
|---|---|---|---|---|---|---|
| Frame Rate | | - | 50 | 60 | - | Hz |
| Clock frequency | | 1/ $T_{Clock}$ | 50 | 68.9 | 80 | MHz |
| Vertical Section | Period | $T_V$ | 803 | 816 | 832 | $T_{Line}$ |
| | Active | $T_{VD}$ | 800 | 800 | 800 | |
| | Blanking | $T_{VB}$ | 3 | 16 | 32 | |
| Horizontal Section | Period | $T_H$ | 1302 | 1408 | 1700 | $T_{Clock}$ |
| | Active | $T_{HD}$ | - | 1280 | - | |
| | Blanking | $T_{HB}$ | 22 | 128 | 420 | |

Note : DE mode only

### 6.4.2 Timing diagram

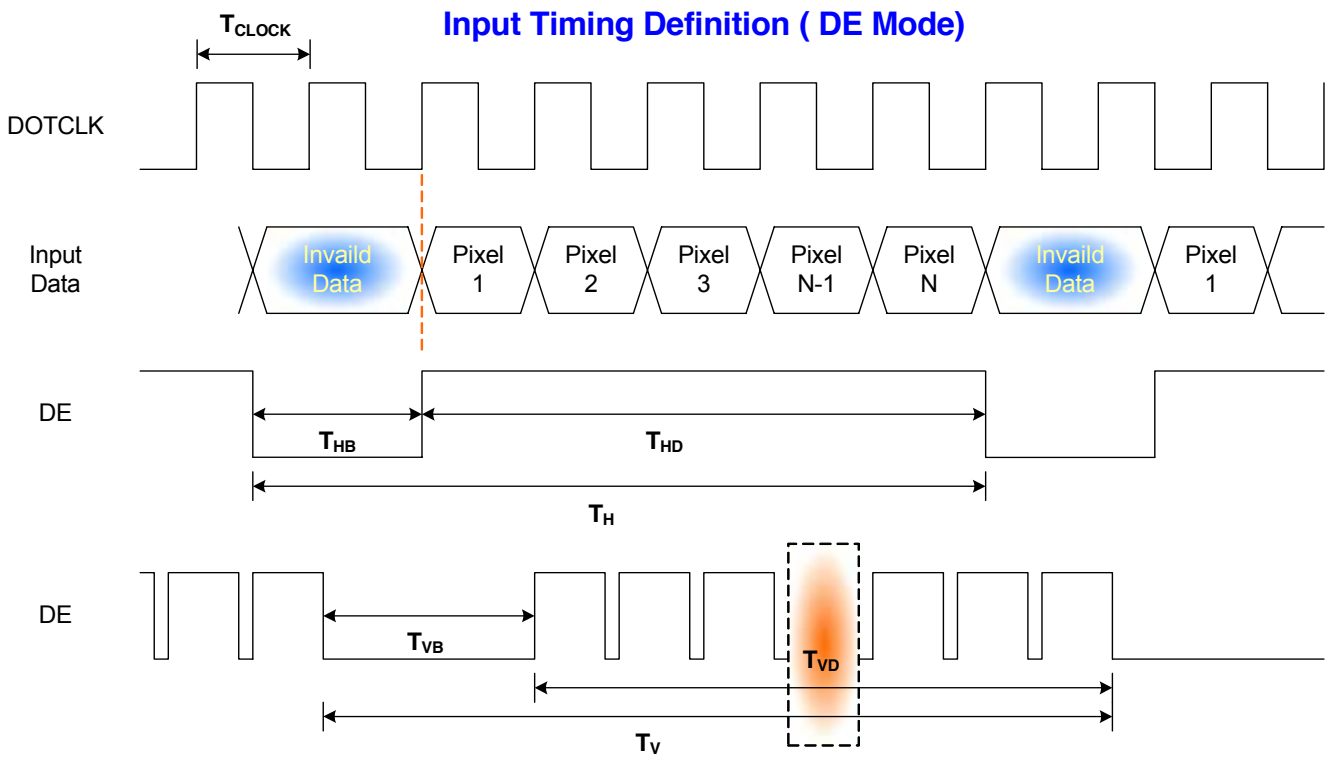

## 6.5 Power ON/OFF Sequence

VDD power and lamp on/off sequence is as follows. Interface signals are also shown in the chart. Signals from any system shall be Hi-Z state or low level when VDD is off.

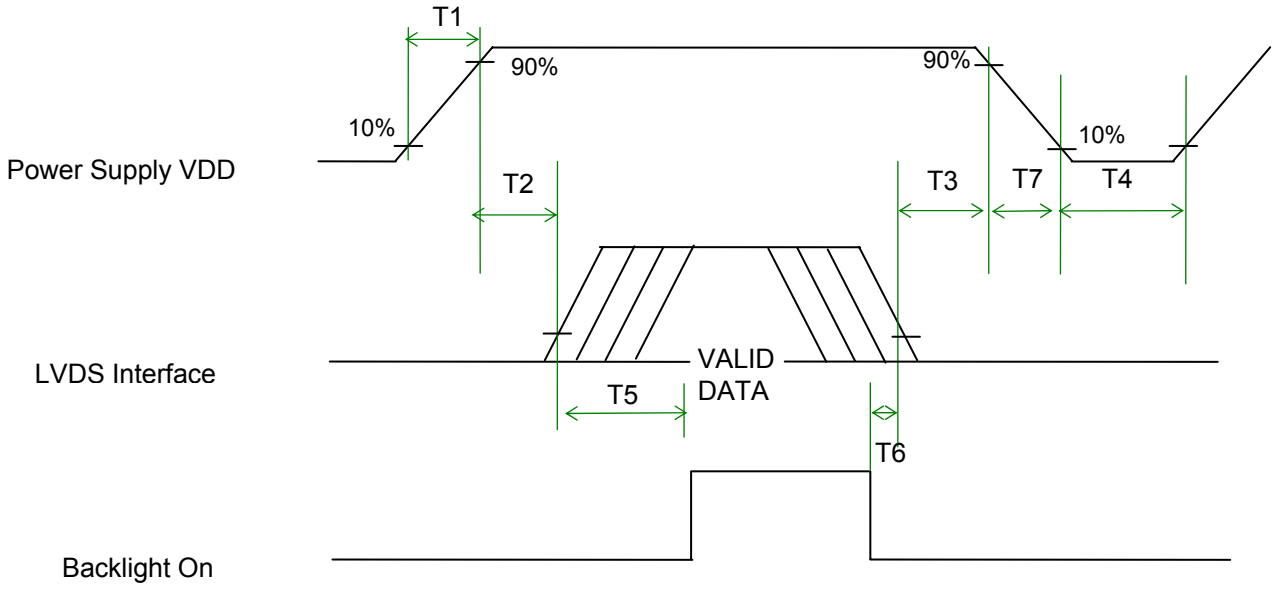


**Power Sequence Timing**

| Parameter | Value | | | Units |
|---|---|---|---|---|
| | Min. | Typ. | Max. | |
| T1 | 0.5 | - | 10 | (ms) |
| T2 | 0 | - | 50 | (ms) |
| T3 | 0 | - | 50 | (ms) |
| T4 | 400 | - | - | (ms) |
| T5 | 200 | - | - | (ms) |
| T6 | 200 | - | - | (ms) |
| T7 | 0 | - | 10 | (ms) |

# 7. Connector Description

Physical interface is described as for the connector on module.

These connectors are capable of accommodating the following signals and will be following components.

## 7.1 TFT LCD Module

| Connector Name / Designation | For Signal Connector |
|---|---|
| Manufacturer | JAE or compatible |
| Type / Part Number | FI-XB30SL-HF10 or compatible |
| Mating Housing/Part Number | FI-X30H or compatible |

## 7.2 Backlight Unit

Physical interface is described as for the connector on module.

These connectors are capable of accommodating the following signals and will be following components.

| Connector Name / Designation | For Lamp Connector |
|---|---|
| Manufacturer | JST |
| Type / Part Number | BHSR-02VS-1 |
| Mating Type / Part Number | SM02B-BHSS-1-TB |

## 7.3 Signal for Lamp connector

| Pin # | Cable color | Signal Name |
|---|---|---|
| 1 | Red | Lamp High Voltage |
| 2 | White | Lamp Low Voltage |

# 8. Vibration and Shock Test (Stand alone)

## 8.1 Vibration Test

**Test Spec:**

- Test method: Non-Operation
- Acceleration: 1.3G
- Frequency: 10 - 500Hz Random
- Sweep: 30 Minutes each Axis (X, Y, Z)

## 8.2 Shock Test Spec:

**Test Spec:**

- Test method: Non-Operation
- Acceleration: 220 G , Half sine wave
- Active time: 2 ms
- Pulse: X,Y,Z .one time for each side

# 9. Reliability

| Items | Required Condition | Note |
|---|---|---|
| Temperature Humidity Bias | 40˚C/95%,250Hr | |
| High Temperature Operation | 65˚C/Dry,250Hr | |
| Low Temperature Operation | 0˚C,300Hr | |
| On/Off Test | 25˚C,150hrs(ON/10 sec. OFF/10sec., 10,000 cycles) | |
| Hot Storage | 65˚C/20% RH ,250 hours | |
| Cold Storage | -40˚C/50% RH ,250 hours | |
| Thermal Shock Test | -40˚C/30 min ,65˚C/30 min 100cycles | |
| Hot Start Test | 50˚C/1 Hr min. power on/off per 5 minutes, 5 times | |
| Cold Start Test | 0˚C/1 Hr min. power on/off per 5 minutes, 5 times | |
| Shock Test (Non-Operating) | 220G, 2ms, Half-sine wave | |
| Vibration Test (Non-Operating) | Random vibration, 1.3 G zero-to-peak, 10 to 500 Hz, 30 mins in each of three mutually perpendicular axes. | |
| ESD | Contact : ±8KV/ operation<br>Air : ±15KV / operation | Note 1 |
| Room temperature Test | 25˚C, 2000hours, Operating with loop pattern | |

Note1: According to EN61000-4-2 , ESD class B: Some performance degradation allowed. No data lost

. Self-recoverable. No hardware failures.

Note2: CCFL Life time: 10,000 hours minimum under normal module usage.

Note3: MTBF (Excluding the CCFL): 30,000 hours with a confidence level 90%

# 10. Mechanical Characteristics

## 10.1 LCM Outline Dimension

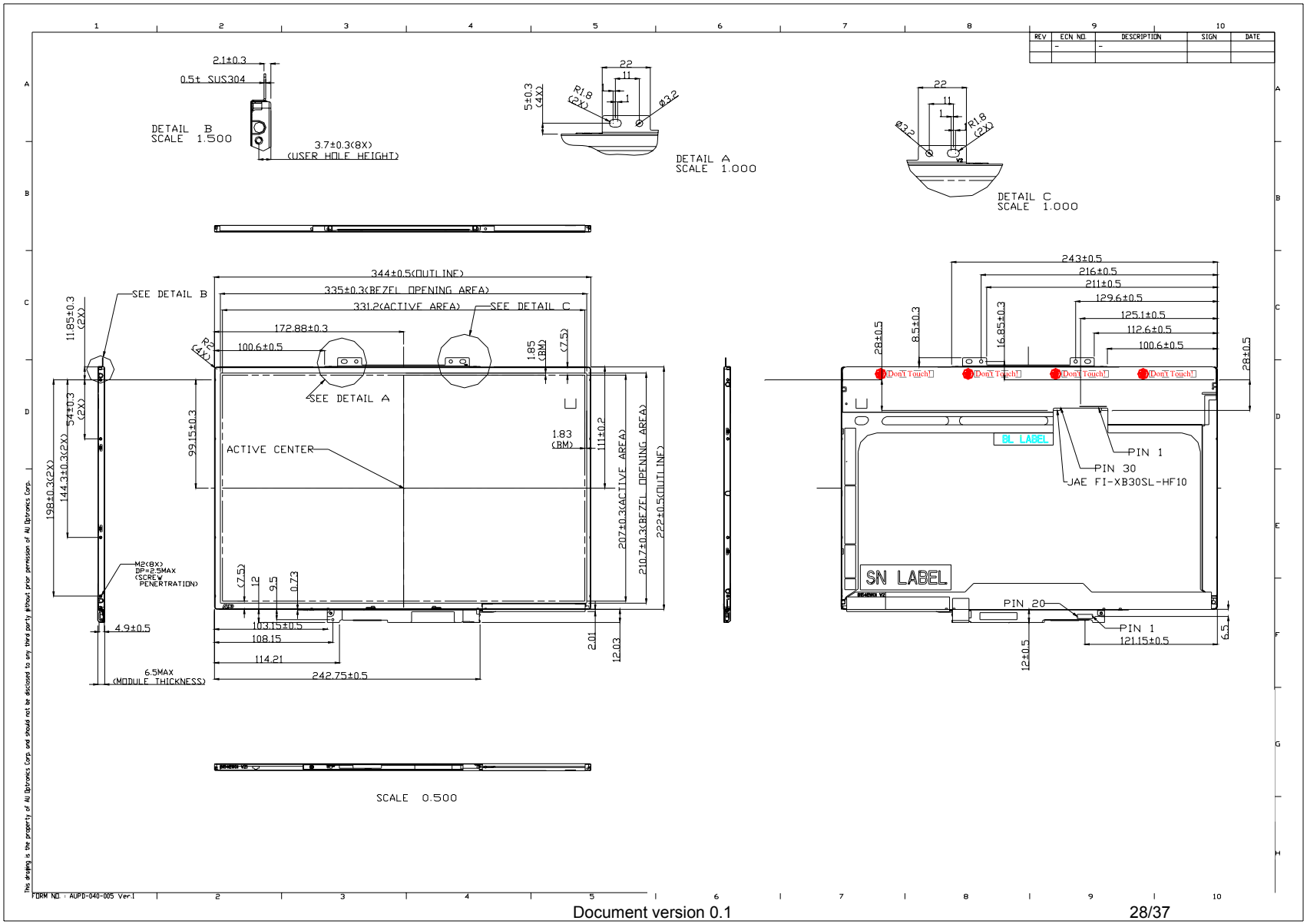

## 10.2 Screw Hole Depth and Center Position

Screw hole minimum depth, from side surface =2.5 mm (See drawing)

Screw hole center location, from front surface = 3.7 ± 0.2mm (See drawing)
Screw Torque: Maximum 2.5 kgf-cm

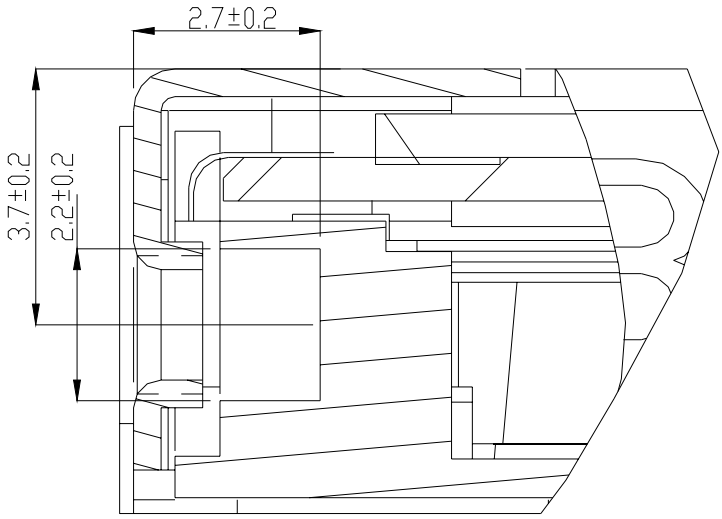

# 11. Shipping and Package

## 11.1 Shipping Label Format

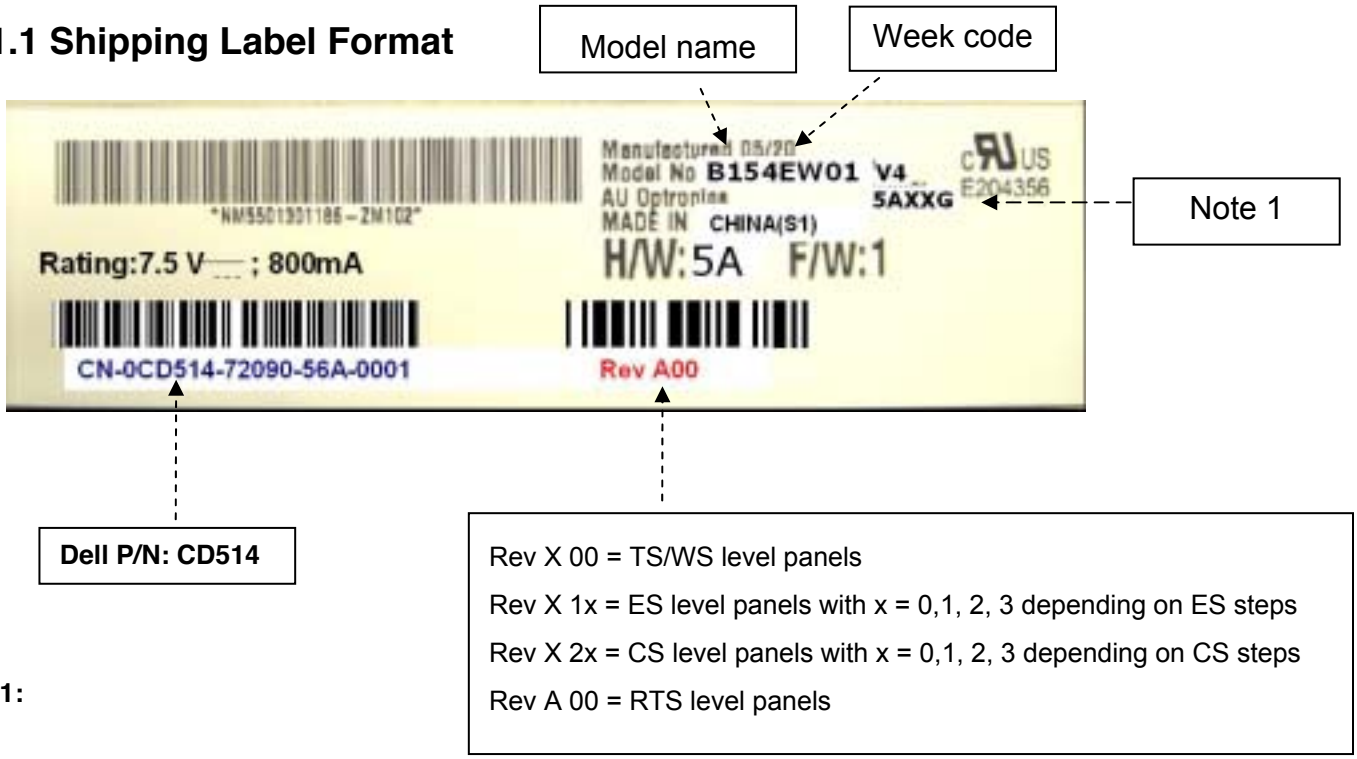


**Note 1:**

Rev X 00 = TS/WS level panels

Rev X 1x = ES level panels with x = 0,1, 2, 3 depending on ES steps

Rev X 2x = CS level panels with x = 0,1, 2, 3 depending on CS steps

Rev A 00 = RTS level panels

| IC Combination | Control Code | H/W |
|---|---|---|
| Source TSBT6L92A<br>Gate IC: NECupd160703 | 5AXXG | 5A |

## 11.2. Carton package

The outside dimension of carton is 455 (L)mm x 380 (W)mm x 355 (H)mm

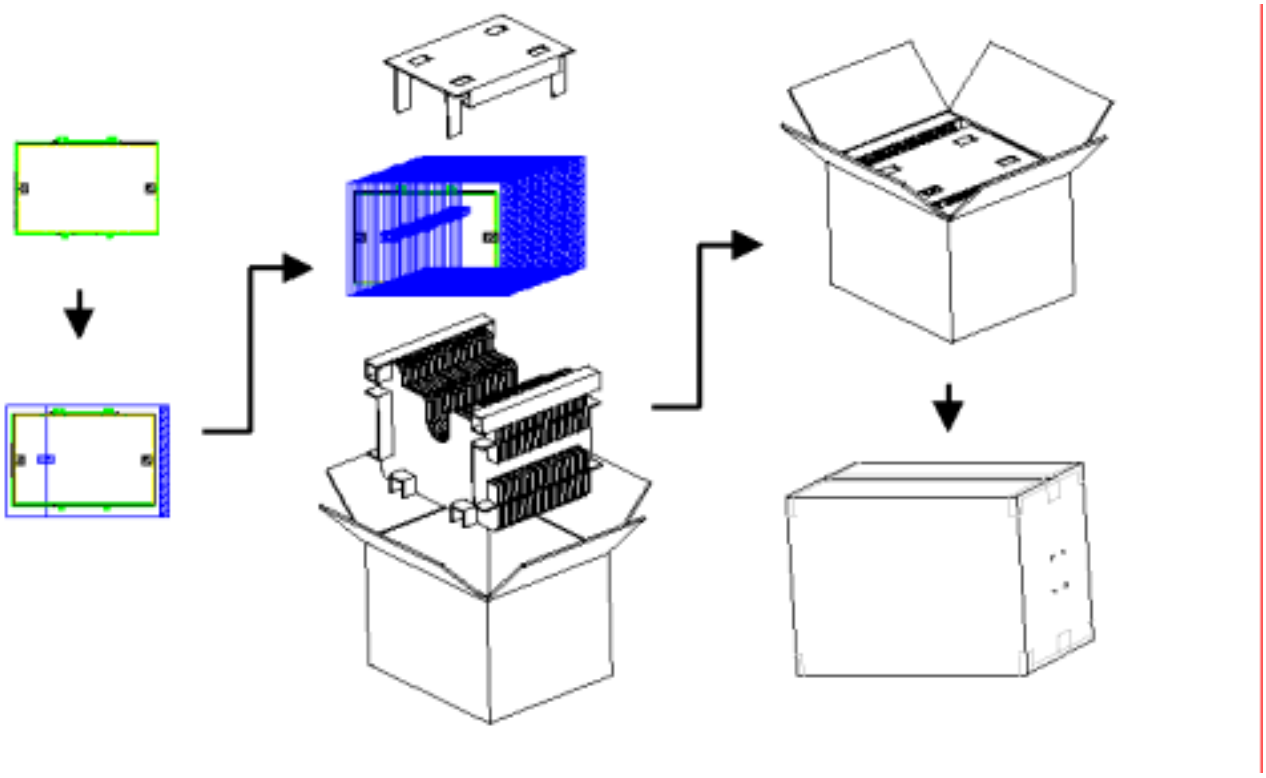

## 11.3 Shipping package of palletizing sequence

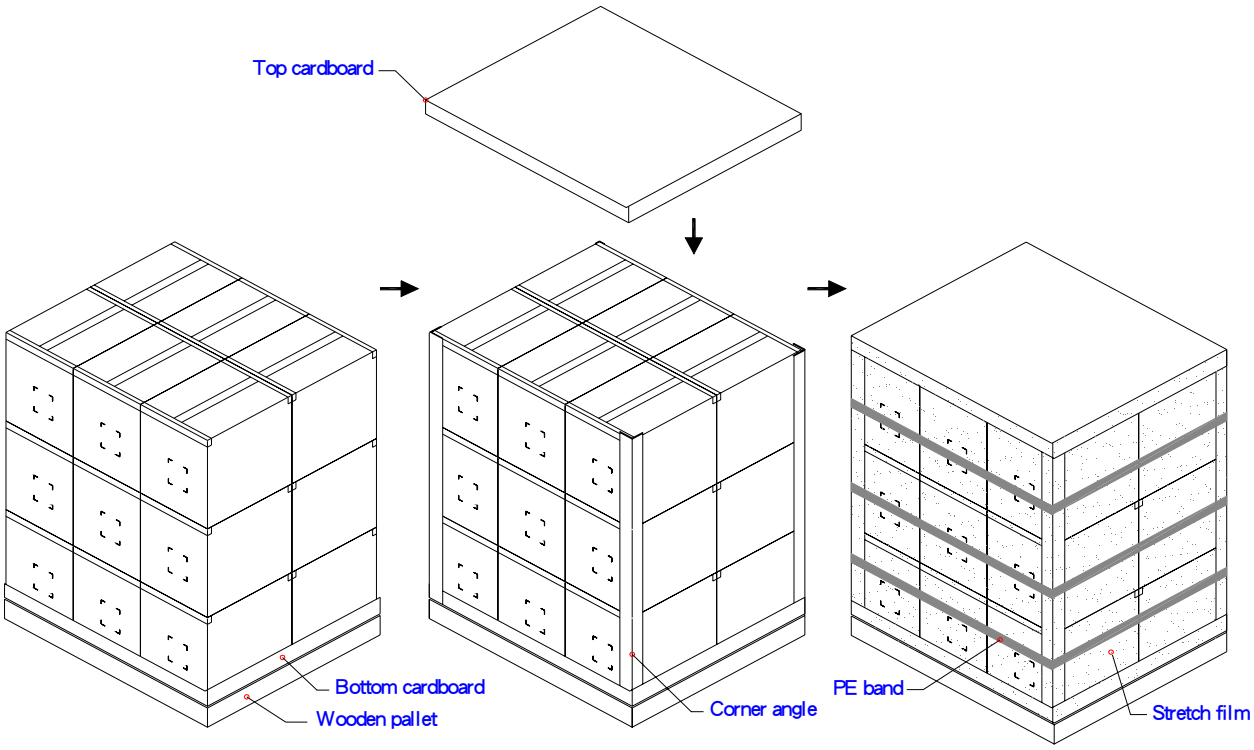


Note : Limit of box palletizing = Max 3 layers(ship and stock conditions)

## 12. Appendix: EDID description

| B154EW01 V4(Foxconn) EDID Table | | | | | |
|---|---|---|---|---|---|
| | Byte (hex) | Field Name and Comments | Value (hex) | Value (binary) | Value (DEC) |
| Header | 0 | Header | 00 | 00000000 | 0 |
| | 1 | Header | FF | 11111111 | 255 |
| | 2 | Header | FF | 11111111 | 255 |
| | 3 | Header | FF | 11111111 | 255 |
| | 4 | Header | FF | 11111111 | 255 |
| | 5 | Header | FF | 11111111 | 255 |
| | 6 | Header | FF | 11111111 | 255 |
| | 7 | Header | 00 | 00000000 | 0 |
| Vendor / Product EDID Version | 8 | EISA manufacture code = 3 Character ID | 06 | 00000110 | 6 |
| | 9 | EISA manufacture code (Compressed ASCII) | AF | 10101111 | 175 |
| | 0A | Panel Supplier Reserved – Product Code | 74 | 01110100 | 116 |
| | 0B | Panel Supplier Reserved – Product Code | 14 | 00010100 | 20 |
| | 0C | LCD module Serial No - Preferred but Optional (“0” if not used) | 00 | 00000000 | 0 |
| | 0D | LCD module Serial No - Preferred but Optional (“0” if not used) | 00 | 00000000 | 0 |
| | 0E | LCD module Serial No - Preferred but Optional (“0” if not used) | 00 | 00000000 | 0 |
| | 0F | LCD module Serial No - Preferred but Optional (“0” if not used) | 00 | 00000000 | 0 |
| | 10 | Week of manufacture | 01 | 00000001 | 1 |
| | 11 | Year of manufacture | 0F | 00001111 | 15 |
| | 12 | EDID structure version # = 1 | 01 | 00000001 | 1 |
| | 13 | EDID revision # = 3 | 03 | 00000011 | 3 |
| Display Parameters | 14 | Video I/P definition = Digital I/P (80h) | 80 | 10000000 | 128 |
| | 15 | Max H image size = (Rounded to cm) | 21 | 00100001 | 33 |
| | 16 | Max V image size = (Rounded to cm) | 15 | 00010101 | 21 |
| | 17 | Display gamma = (gamma ×100)-100 = Example: ( 2.2×100 ) – 100 = 120 | 78 | 01111000 | 120 |
| | 18 | Feature support ( no DPMS, Active off, RGB, timing BLK 1) | 0A | 00001010 | 10 |
| Panel Color Coordinates | 19 | Red/Green Low bit (RxRy/GxGy) | A7 | 10100111 | 167 |
| | 1A | Blue/White Low bit (BxBy/WxWy) | E5 | 11100101 | 229 |
| | 1B | Red X | 99 | 10011001 | 153 |
| | 1C | Red Y | 59 | 01011001 | 89 |
| | 1D | Green X | 4F | 01001111 | 79 |

| | | | | | |
|---|---|---|---|---|---|
| | 1E | Green Y | 8C | 10001100 | 140 |
| | 1F | Blue X | 27 | 00100111 | 39 |
| | 20 | Blue Y | 1D | 00011101 | 29 |
| | 21 | White X | 50 | 01010000 | 80 |
| | 22 | White Y | 54 | 01010100 | 84 |
| Established Timings | 23 | Established timings 1 (00h if not used) | 00 | 00000000 | 0 |
| | 24 | Established timings 2 (00h if not used) | 00 | 00000000 | 0 |
| | 25 | Manufacturer's timings (00h if not used) | 00 | 00000000 | 0 |
| Standard Timing ID | 26 | Standard timing ID1 (01h if not used) | 01 | 00000001 | 1 |
| | 27 | Standard timing ID1 (01h if not used) | 01 | 00000001 | 1 |
| | 28 | Standard timing ID2 (01h if not used) | 01 | 00000001 | 1 |
| | 29 | Standard timing ID2 (01h if not used) | 01 | 00000001 | 1 |
| | 2A | Standard timing ID3 (01h if not used) | 01 | 00000001 | 1 |
| | 2B | Standard timing ID3 (01h if not used) | 01 | 00000001 | 1 |
| | 2C | Standard timing ID4 (01h if not used) | 01 | 00000001 | 1 |
| | 2D | Standard timing ID4 (01h if not used) | 01 | 00000001 | 1 |
| | 2E | Standard timing ID5 (01h if not used) | 01 | 00000001 | 1 |
| | 2F | Standard timing ID5 (01h if not used) | 01 | 00000001 | 1 |
| | 30 | Standard timing ID6 (01h if not used) | 01 | 00000001 | 1 |
| | 31 | Standard timing ID6 (01h if not used) | 01 | 00000001 | 1 |
| | 32 | Standard timing ID7 (01h if not used) | 01 | 00000001 | 1 |
| | 33 | Standard timing ID7 (01h if not used) | 01 | 00000001 | 1 |
| | 34 | Standard timing ID8 (01h if not used) | 01 | 00000001 | 1 |
| | 35 | Standard timing ID8 (01h if not used) | 01 | 00000001 | 1 |
| Timing Descripter #1 | 36 | Pixel Clock/10,000 (LSB) | C7 | 11000111 | 199 |
| | 37 | Pixel Clock/10,000 (MSB) | 1B | 00011011 | 27 |
| | 38 | Horizontal Active (lower 8 bits) | 00 | 00000000 | 0 |
| | 39 | Horizontal Blanking (Thbp) (lower 8 bits) | A0 | 10100000 | 160 |
| | 3A | Horizontal Active/Horizontal blanking (Thbp) (upper4:4 bits) | 50 | 01010000 | 80 |
| | 3B | Vertical Active | 20 | 00100000 | 32 |
| | 3C | Vertical Blanking (Tvbp) (DE Blanking typ. for DE only panels) | 17 | 00010111 | 23 |
| | 3D | Vertical Active : Vertical Blanking (Tvbp) (upper4:4 bits) | 30 | 00110000 | 48 |
| | 3E | Horizontal Sync, Offset (Thfp) | 15 | 00010101 | 21 |

| | | | | | |
|---|---|---|---|---|---|
| | 3F | Horizontal Sync, Pulse Width | 20 | 00100000 | 32 |
| | 40 | Vertical Sync, Offset (Tvfp) Sync Width | 44 | 01000100 | 68 |
| | 41 | Horizontal Vertical Sync Offset/Width upper 2 bits | 00 | 00000000 | 0 |
| | 42 | Horizontal Image Size | 4B | 01001011 | 75 |
| | 43 | Vertical image Size | CF | 11001111 | 207 |
| | 44 | Horizontal Image Size / Vertical image size | 10 | 00010000 | 16 |
| | 45 | Horizontal Border = 0 (Zero for Notebook LCD) | 00 | 00000000 | 0 |
| | 46 | Vertical Border = 0 (Zero for Notebook LCD) | 00 | 00000000 | 0 |
| | 47 | Non-interlaced, Normal, no stereo, Separate sync, H/V pol Negatives, **DE only note: LSB is set to "1" if panel is DE-timing only. H/V can be ignored.** | 18 | 00011000 | 24 |
| Timing Descripter #2 | 48 | Pixel Clock/10,000 (LSB) | 26 | 00100110 | 38 |
| | 49 | Pixel Clock/10,000 (MSB) | 17 | 00010111 | 23 |
| | 4A | Horizontal Active = xxxx pixels (lower 8 bits) | 00 | 00000000 | 0 |
| | 4B | Horizontal Blanking (Thbp) = xxxx pixels (lower 8 bits) | A0 | 10100000 | 160 |
| | 4C | Horizontal Active/Horizontal blanking (Thbp) (upper4:4 bits) | 50 | 01010000 | 80 |
| | 4D | Vertical Active = xxxx lines | 20 | 00100000 | 32 |
| | 4E | Vertical Blanking (Tvbp) = xxxx lines (DE Blanking typ. for DE only panels) | 17 | 00010111 | 23 |
| | 4F | Vertical Active : Vertical Blanking (Tvbp) (upper4:4 bits) | 30 | 00110000 | 48 |
| | 50 | Horizontal Sync, Offset (Thfp) = xxxx pixels | 15 | 00010101 | 21 |
| | 51 | Horizontal Sync, Pulse Width = xxxx pixels | 20 | 00100000 | 32 |
| | 52 | Vertical Sync, Offset (Tvfp) = xx lines Sync Width = xx lines | 44 | 01000100 | 68 |
| | 53 | Horizontal Vertical Sync Offset/Width upper 2 bits | 00 | 00000000 | 0 |
| | 54 | Horizontal Image Size =xxx mm | 4B | 01001011 | 75 |
| | 55 | Vertical image Size = xxx mm | CF | 11001111 | 207 |
| | 56 | Horizontal Image Size / Vertical image size | 10 | 00010000 | 16 |
| | 57 | Horizontal Border = 0 (Zero for Notebook LCD) | 00 | 00000000 | 0 |

| | | | | | |
|---|---|---|---|---|---|
| | 58 | Vertical Border = 0 (Zero for Notebook LCD) | 00 | 00000000 | 0 |
| | 59 | Module "A" Revision = Example: 00, 01, 02, 03, etc. | 00 | 00000000 | 0 |
| Timing Descripter #3 Dell specific information | 5A | Flag | 00 | 00000000 | 0 |
| | 5B | Flag | 00 | 00000000 | 0 |
| | 5C | Flag | 00 | 00000000 | 0 |
| | 5D | Dummy Descriptor | FE | 11111110 | 254 |
| | 5E | Flag | 00 | 00000000 | 0 |
| | 5F | Dell P/N 1st Character | 43 | 01000011 | 67 |
| | 60 | Dell P/N 2nd Character | 44 | 01000100 | 68 |
| | 61 | Dell P/N 3rd Character | 35 | 00110101 | 53 |
| | 62 | Dell P/N 4th Character | 31 | 00110001 | 49 |
| | 63 | Dell P/N 5th Character | 34 | 00110100 | 52 |
| | 64 | LCD Supplier EEDID Revision # | 00 | 00000000 | 0 |
| | 65 | Manufacturer P/N | 42 | 01000010 | 66 |
| | 66 | Manufacturer P/N | 31 | 00110001 | 49 |
| | 67 | Manufacturer P/N | 35 | 00110101 | 53 |
| | 68 | Manufacturer P/N | 34 | 00110100 | 52 |
| | 69 | Manufacturer P/N | 45 | 01000101 | 69 |
| | 6A | Manufacturer P/N | 57 | 01010111 | 87 |
| | 6B | Manufacturer P/N (If <13 char, then terminate with ASCII code 0Ah, set remaining char = 20h) | 31 | 00110001 | 49 |
| Timing Descripter #4 | 6C | Flag | 00 | 00000000 | 0 |
| | 6D | Flag | 00 | 00000000 | 0 |
| | 6E | Flag | 00 | 00000000 | 0 |
| | 6F | Data Type Tag: | FE | 11111110 | 254 |
| | 70 | Flag | 00 | 00000000 | 0 |
| | 71 | SMBUS Value | 30 | 00110000 | 48 |
| | 72 | SMBUS Value | 41 | 01000001 | 65 |
| | 73 | SMBUS Value | 4D | 01001101 | 77 |
| | 74 | SMBUS Value | 57 | 01010111 | 87 |
| | 75 | SMBUS Value | 78 | 01111000 | 120 |
| | 76 | SMBUS Value | A4 | 10100100 | 164 |
| | 77 | SMBUS Value | CC | 11001100 | 204 |
| | 78 | SMBUS Value = max nits (Typically = 00h) | F8 | 11111000 | 248 |
| | 79 | Number of LVDS receiver chips = '01' or '02' | 01 | 00000001 | 1 |
| | 7A | BIST Enable: Yes = '01' No = '00' | 01 | 00000001 | 1 |
| | 7B | (If <13 char, then terminate with ASCII code 0Ah, set remaining char = 20h) | 0A | 00001010 | 10 |

| | | | | | |
|---|---|---|---|---|---|
| | 7C | (If <13 char, then terminate with ASCII code 0Ah, set remaining char = 20h) | 20 | 00100000 | 32 |
| | 7D | (If <13 char, then terminate with ASCII code 0Ah, set remaining char = 20h) | 20 | 00100000 | 32 |
| Checksum | 7E | Extension flag (# of optional 128 EDID extension blocks to follow, Typ = 0) | 00 | 00000000 | 0 |
| | 7F | Checksum (The 1-byte sum of all 128 bytes in this EDID block shall = 0) | FA | 11111010 | 250 |