Product Specification

AU OPTRONICS CORPORATION

(V) Preliminary Specifications
( ) Final Specifications

Module	**" WXGA Color TFT-LCD with LED Backlight design**
Model Name	B154EW09 V0
Note ( )	***LED Backlight with driving circuit design***

Customer	**Date**	**Approved by**	**Date**
Checked & Approved by	**Date**	**Prepared by**	
Note: This Specification is subject to change without notice.		**AU Optronics corporation**	

Contents

1. Handling Precautions 4
2. General Description 5
2.1 General Specification 5
2.2 Optical Characteristics 6
3. Functional Block Diagram 11
4. Absolute Maximum Ratings 12
4.1 Absolute Ratings of TFT LCD Module 12
4.2 Absolute Ratings of Environment 12
5. Electrical characteristics 13
5.1 TFT LCD Module 13
5.2 Backlight Unit 15
6. Signal Characteristic 16
6.1 Pixel Format Image 16
6.2 The input data format 17
6.3 Integration Interface and Pin Assignment 18
6.4 Interface Timing 22
6.5 Power ON/OFF Sequence 23
7. Connector Description 25
7.1 TFT LCD Module 25
8. LED Driving Specification 26
8.1 Connector Description 26
8.2 Pin Assignment 26
9. Vibration and Shock Test 27
9.1 Vibration Test 27
9.2 Shock Test Spec: 27
10. Reliability 28
11. Mechanical Characteristics 29
11.1 LCM Outline Dimension 29
11.2 Screw Hole Depth and Center Position 31
12. Shipping and Package 32
12.1 Shipping Label Format 32
12.2 Carton package 33
12.3 Shipping package of palletizing sequence 33
13. Appendix: EDID description 34

Record of Revision

Version and Date	Page	Old description	New Description	Remark
0.1 2008/04/28	All	First Edition for Customer		

1. Handling Precautions

1) Since front polarizer is easily damaged, pay attention not to scratch it.
2) Be sure to turn off power supply when inserting or disconnecting from input connector.
3) Wipe off water drop immediately. Long contact with water may cause discoloration or spots.
4) When the panel surface is soiled, wipe it with absorbent cotton or other soft cloth.
5) Since the panel is made of glass, it may break or crack if dropped or bumped on hard surface.
6) Since CMOS LSI is used in this module, take care of static electricity and insure human earth when handling.
7) Do not open nor modify the Module Assembly.
8) Do not press the reflector sheet at the back of the module to any directions.
9) At the insertion or removal of the Signal Interface Connector, be sure not to rotate nor tilt the Interface Connector of the TFT Module.
11) After installation of the TFT Module into an enclosure (Notebook PC Bezel, for example), do not twist nor bend the TFT Module even momentary. At designing the enclosure, it should be taken into consideration that no bending/twisting forces are applied to the TFT Module from outside. Otherwise the TFT Module may be damaged.
12) Small amount of materials having no flammability grade is used in the LCD module. The LCD module should be supplied by power complied with requirements of Limited Power Source (IEC60950 or UL1950), or be applied exemption.
13) Disconnecting power supply before handling LCD modules, it can prevent electric shock, DO NOT TOUCH the electrode parts, cables, connectors and LED circuit part of TFT module that a LED light bar build in as a light source of back light unit. It can prevent electrostic breakdown.

2. General Description

B154EW09 V0 is a Color Active Matrix Liquid Crystal Display composed of a TFT LCD panel, a driver circuit, and LED backlight system. The screen format is intended to support the WXGA (1280(H) x 800(V)) screen and 262k colors (RGB 6-bits data driver) with LED backlight driving circuit. All input signals are LVDS interface compatible.

B154EW09 V0 is designed for a display unit of notebook style personal computer and industrial machine.

2.1 General Specification

The following items are characteristics summary on the table at 25 ℃ condition:

Items	Unit	Specifications
Screen Diagonal	[mm]	391 (15.4W")
Active Area	[mm]	331.2(H) X 207.0(V)
Pixels H x V		1280x3(RGB) x 800
Pixel Pitch	[mm]	0.2588X0.2588
Pixel Arrangement		R.G.B. Vertical Stripe
Display Mode		Normally White
White Luminance (I_{LED}=20mA) Note: I_{LED} is LED current	[cd/m^2]	220 typ. (5 points average) 187 min. (5 points average) (Note1)
Luminance Uniformity		1.25 max. (5 points)
Contrast Ratio		500 typ
Response Time	[ms]	8 typ.
Nominal Input Voltage VDD	[Volt]	+3.3 typ.
Power Consumption	[Watt]	5.7 max. (Include Logic and Back Light power)
Weight	[Grams]	460 max.
Physical Size **without inverter, bracket.**	[mm]	
Electrical Interface		1 channel LVDS
Surface Treatment		Glare, Hardness 3H,
Support Color		262K colors (RGB 6-bit)

	Length	Width	Thickness
Max	344.5	222.5	5.7
Typical	344.0	222.0	-
Min	343.5	221.5	-

Temperature Range Operating Storage (Non-Operating)	 [°C] [°C]	 0 to +50 -20 to +60
RoHS Compliance		RoHS Compliance

2.2 Optical Characteristics

The optical characteristics are measured under stable conditions at 25℃ (Room Temperature) :

Item		Symbol	Conditions	Min.	Typ.	Max.	Unit	Note
White Luminance I_{LED}=20mA			5 points average	187	220	-	cd/m^2	1, 4, 5.
Viewing Angle		θ_R θ_L	Horizontal (Right) CR = 10 (Left)	40 40	45 45	- -	degree	4, 9
		ϕ_H ϕ_L	Vertical (Upper) CR = 10 (Lower)	10 30	15 35	- -		
Luminance Uniformity		δ_{5P}	5 Points	-	-	1.25		1, 3, 4
Luminance Uniformity		δ_{13P}	13 Points	-	-	1.50		2, 3, 4
Contrast Ratio		CR		400	500	-		4, 6
Cross talk		%				4		4, 7
Response Time		T_r	Rising	-	TBD	-	msec	4, 8
		T_f	Falling	-	TBD	-		
		T_{RT}	Rising + Falling	-	8	16		
Color / Chromaticity Coodinates	Red	Rx	CIE 1931	-	TBD	-		4
		Ry		-	TBD	-		
	Green	Gx		-	TBD	-		
		Gy		-	TBD	-		
	Blue	Bx		-	TBD	-		
		By		-	TBD	-		
	White	Wx		0.263	0.313	0.363		
		Wy		0.279	0.329	0.379		
NTSC		%		-	45	-		

Note 1: 5 points position (Ref: Active area)

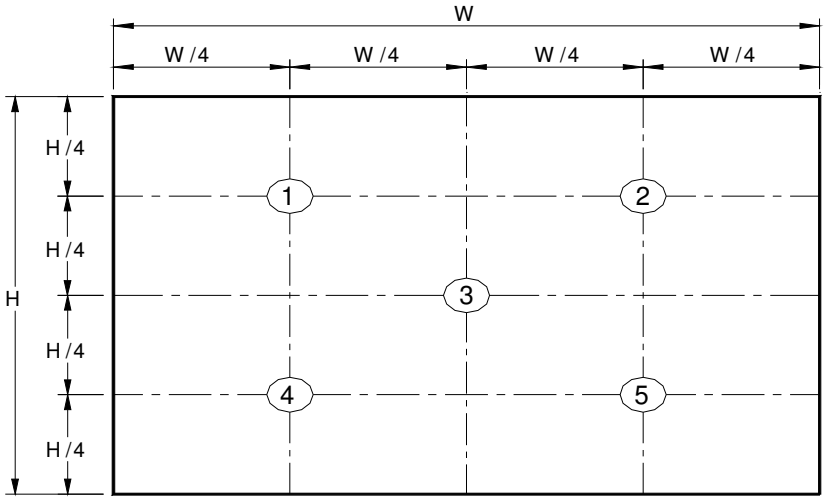

Note 2: 13 points position (Ref: Active area)

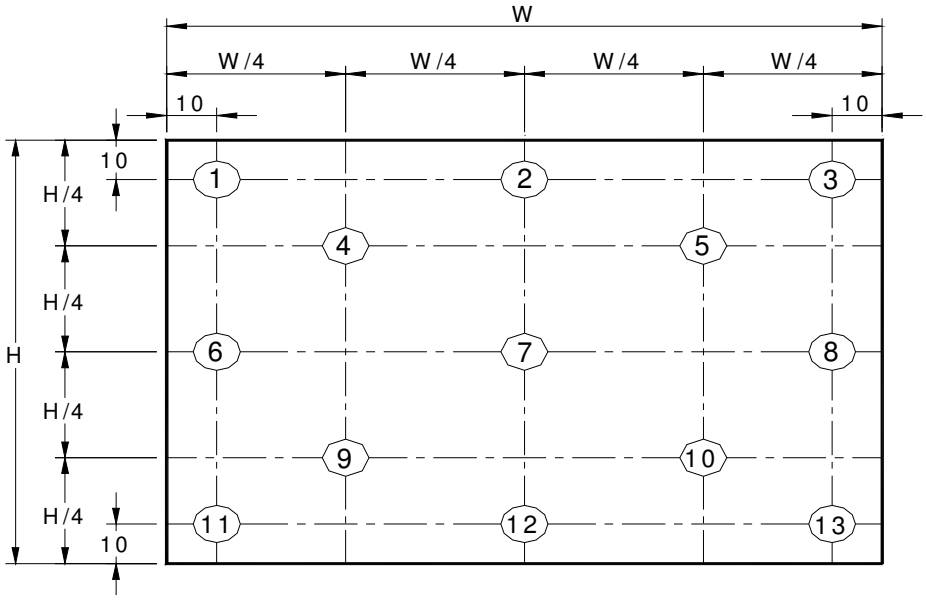

Note 3: The luminance uniformity of 5 or13 points is defined by dividing the maximum luminance values by the minimum test point luminance

$$\delta_{W5} = \frac{\text{Maximum Brightness of five points}}{\text{Minimum Brightness of five points}}$$

$$\delta_{W13} = \frac{\text{Maximum Brightness of thirteen points}}{\text{Minimum Brightness of thirteen points}}$$

Note 4: Measurement method

The LCD module should be stabilized at given temperature for 30 minutes to avoid abrupt temperature change during measuring. In order to stabilize the luminance, the measurement should be executed after lighting Backlight for 30 minutes in a stable, windless and dark room, and it should be measured in the center of screen.

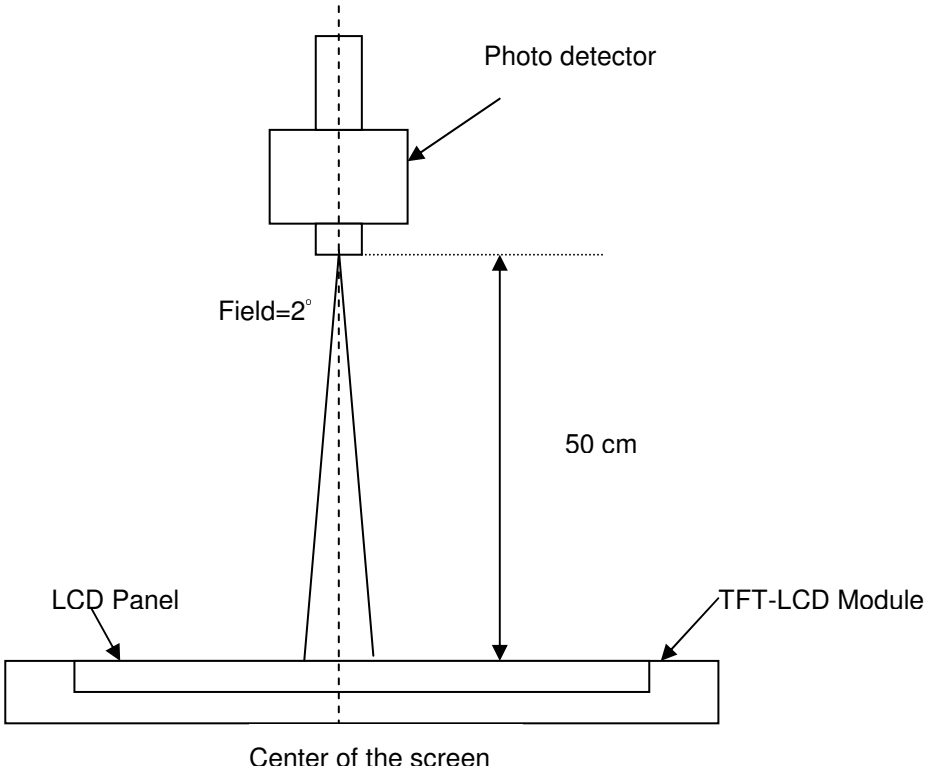

Note 5： Definition of Average Luminance of White (Y_L):

Measure the luminance of gray level 63 at 5 points，Y_L = [L (1)+ L (2)+ L (3)+ L (4)+ L (5)] / 5

L (x) is corresponding to the luminance of the point X at Figure in Note (1).

Note 6： Definition of contrast ratio:

Contrast ratio is calculated with the following formula.

$$\text{Contrast ratio (CR)} = \frac{\text{Brightness on the “White” state}}{\text{Brightness on the “Black” state}}$$

Note 7： Definition of Cross Talk (CT)

$CT = | Y_B - Y_A | / Y_A \times 100$ (%)

Where

Y_A = Luminance of measured location without gray level 0 pattern (cd/m2)

Y_B = Luminance of measured location with gray level 0 pattern (cd/m2)

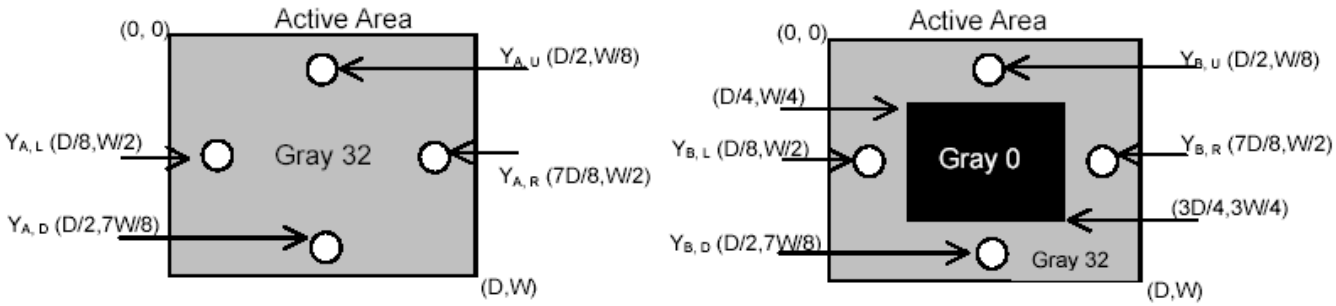

Note 8: Definition of response time:

The output signals of BM-7 or equivalent are measured when the input signals are changed from “Black” to “White” (falling time) and from “White” to “Black” (rising time), respectively. The response time interval between the 10% and 90% of amplitudes. Refer to figure as below.

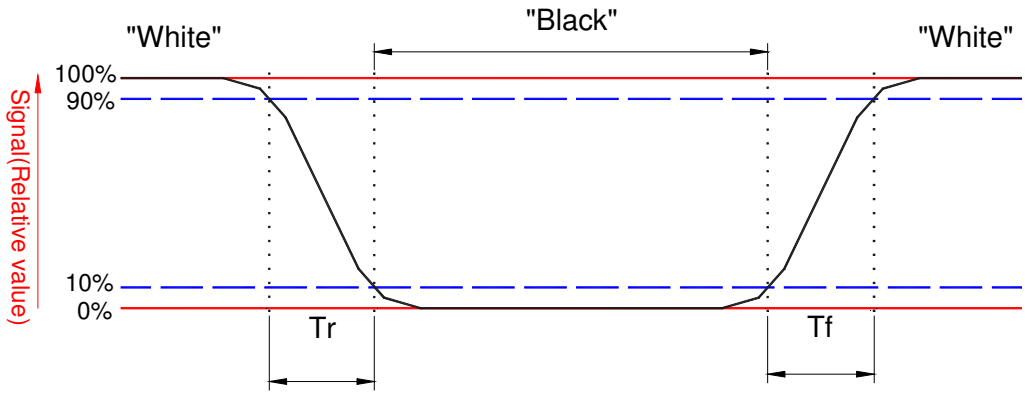

Note 8. Definition of viewing angle

Viewing angle is the measurement of contrast ratio ≧10, at the screen center, over a 180° horizontal and 180° vertical range (off-normal viewing angles). The 180° viewing angle range is broken down as follows; 90° (θ) horizontal left and right and 90° (Φ) vertical, high (up) and low (down). The measurement direction is typically perpendicular to the display surface with the screen rotated about its center to develop the desired measurement viewing angle.

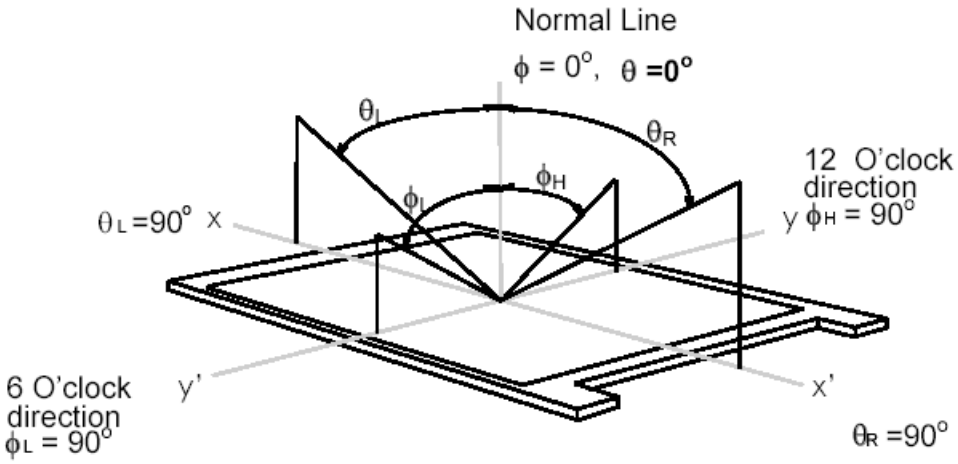

3. Functional Block Diagram

The following diagram shows the functional block of the 15.4 inches wide Color TFT/LCD 40 Pin (One ch/connector Module:

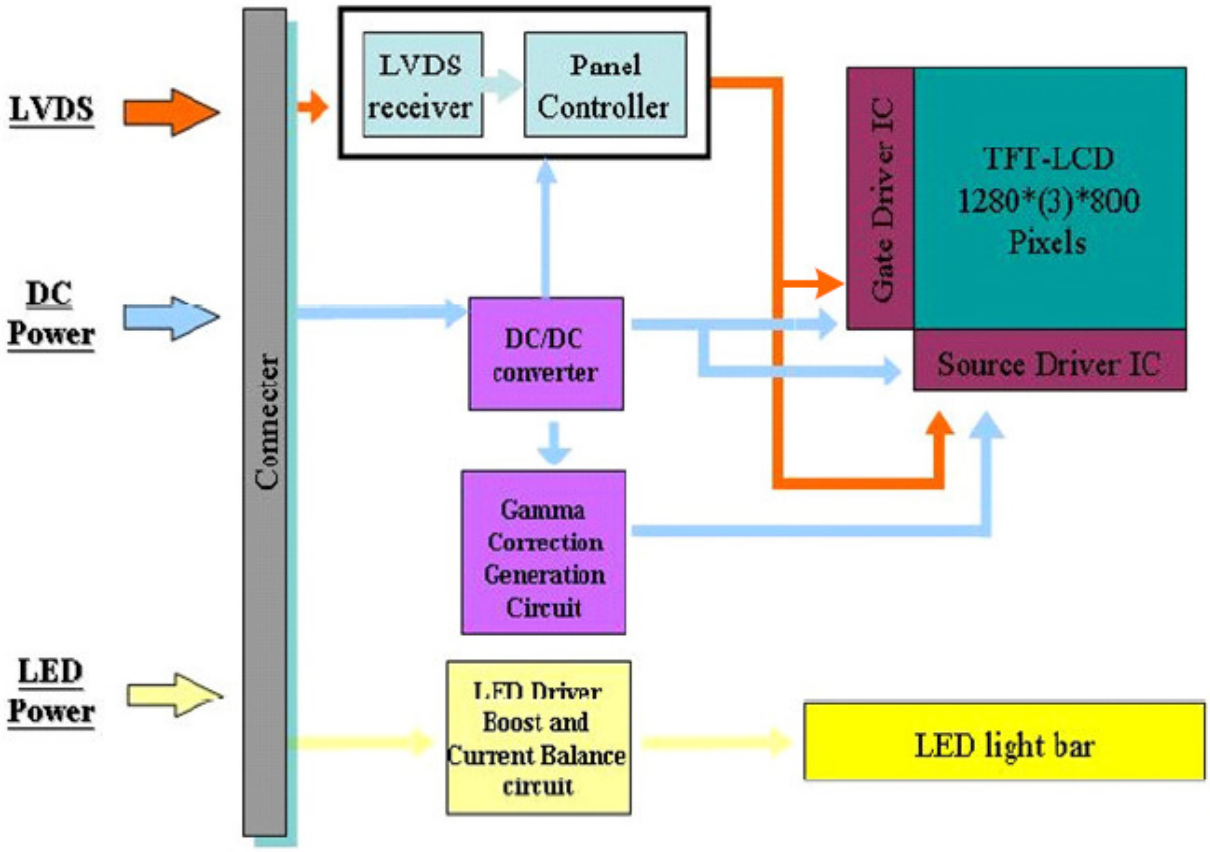

4. Absolute Maximum Ratings

An absolute maximum rating of the module is as following:

4.1 Absolute Ratings of TFT LCD Module

Item	Symbol	Min	Max	Unit	Conditions
Logic/LCD Drive Voltage	Vin	-0.3	+4.0	[Volt]	Note 1,2

4.2 Absolute Ratings of Environment

Item	Symbol	Min	Max	Unit	Conditions
Operating Temperature	TOP	0	+50	[°C]	Note 4
Operation Humidity	HOP	10	90	[%RH]	Note 4
Storage Temperature	TST	-20	+60	[°C]	Note 4
Storage Humidity	HST	10	90	[%RH]	Note 4

Note 1: At Ta (25℃)

Note 2: I_{LED}=20 mA. Permanent damage to the device may occur if exceed maximum values.

Note 3: LED specification refer to section 5.2

Note 4: For quality performance, please refer to AUO IIS (Incoming Inspection Standard).

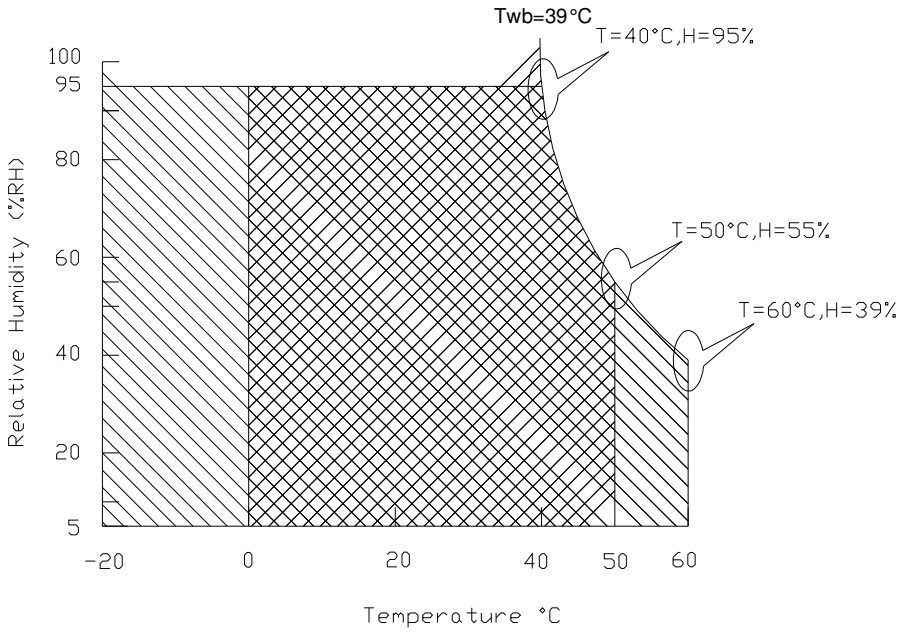

Operating Range Storage Range +

5. Electrical characteristics

5.1 TFT LCD Module

5.1.1 Power Specification

Input power specifications are as follows;

Symble	Parameter	Min	Typ	Max	Units	Note
VDD	Logic/LCD Drive Voltage	3.0	3.3	3.6	[Volt]	
PDD	VDD Power	-	-	2	[Watt]	Note 1/2
IDD	IDD Current	-	350	540	[mA]	Note 1/2
IRush	Inrush Current	-	-	2000	[mA]	Note 3
VDDrp	Allowable Logic/LCD Drive Ripple Voltage	-	-	100	[mV] p-p	

Note 1 : Maximum Measurement Condition：Black Pattern

Note 2：Typical Measurement Condition: Mosaic Pattern

Note 3：Measure Condition

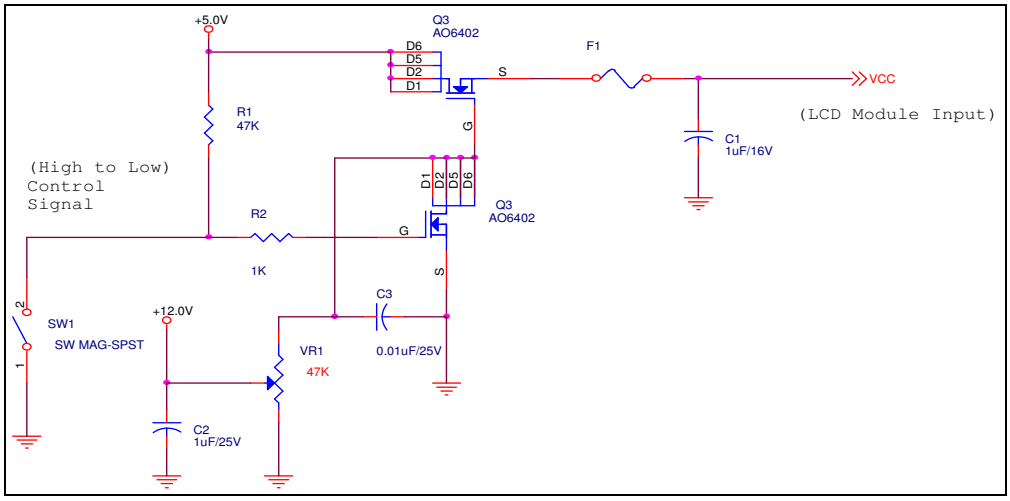

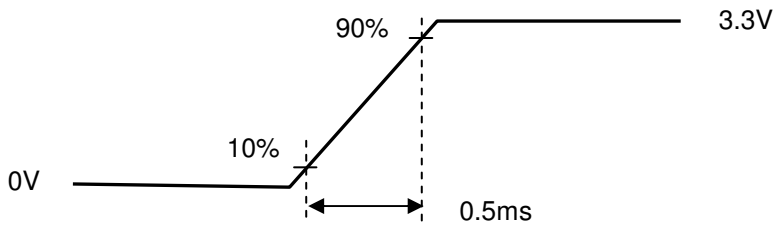

Vin rising time

5.1.2 Signal Electrical Characteristics

Input signals shall be low or High-impedance state when VDD is off.

It is recommended to refer the specifications of THC63LVDF84A (Thine Electronics Inc.) in detail.

Signal electrical characteristics are as follows;

Parameter	Condition	Min	Max	Unit
Vth	Differential Input High Threshold (Vcm=+1.2V)	-	100	[mV]
Vtl	Differential Input Low Threshold (Vcm=+1.2V)	-100	-	[mV]
Vcm	Differential Input Common Mode Voltage	1.125	1.375	[V]

Note: LVDS Signal Waveform

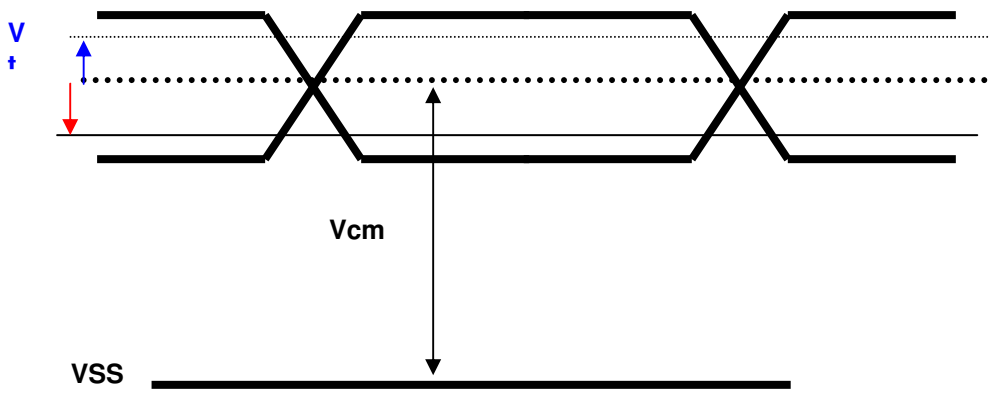

5.2 Backlight Unit

LED Parameter guideline for LED driving selection (Ref. Remark 1)

Parameter	Symbol	Min	Typ	Max	Units	Condition
LED Forward Voltage	V_F	2.95	3.15	3.35	[Volt]	(Ta=25℃)
LED Forward Current	I_F		20	30	[mA]	(Ta=25℃)
LED Power consumption	P_{LED}		4.26		[Watt]	(Ta=25℃) Note 1
LED Life-Time	N/A	10,000	-	-	Hour	(Ta=25℃) I_F=20 mA Note 2
Output PWM frequency	F_{PWM}	180	200	220	Hz	
Duty ratio	--	20	--	100	%	

Note 1: Calculator value for reference $I_F \times V_F = P$

Note 2: The LED life-time define as the estimated time to 50% degradation of initial luminous.

6. Signal Characteristic

6.1 Pixel Format Image

Following figure shows the relationship of the input signals and LCD pixel format.

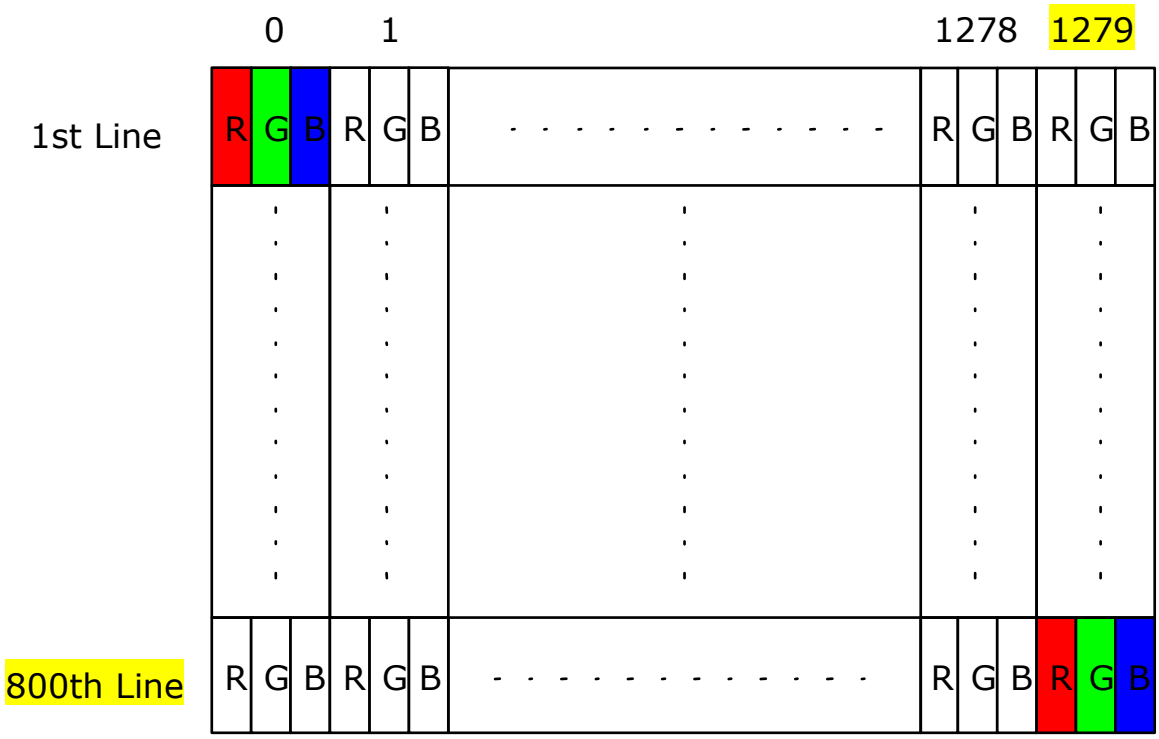

6.2 The input data format

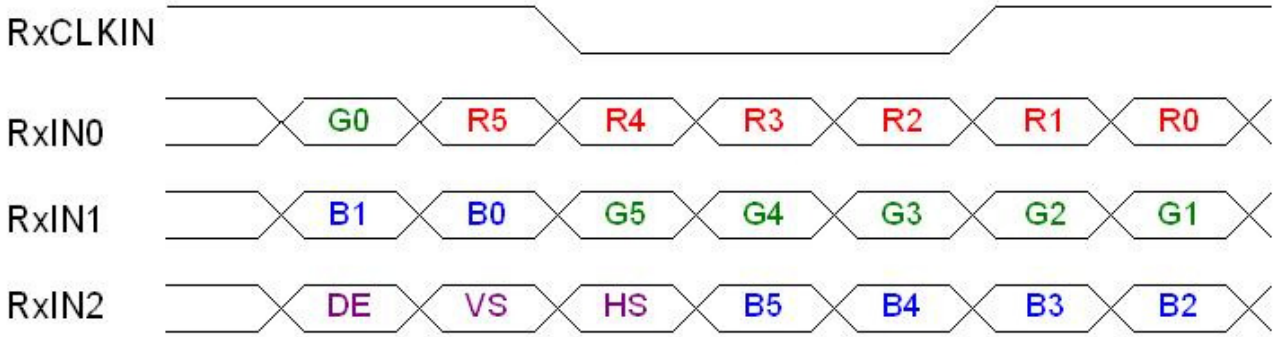

Signal Name	Description	
R5 R4 R3 R2 R1 R0	Red Data 5 (MSB) Red Data 4 Red Data 3 Red Data 2 Red Data 1 Red Data 0 (LSB) Red-pixel Data	Red-pixel Data Each red pixel's brightness data consists of these 6 bits pixel data.
G5 G4 G3 G2 G1 G0	Green Data 5 (MSB) Green Data 4 Green Data 3 Green Data 2 Green Data 1 Green Data 0 (LSB) Green-pixel Data	Green-pixel Data Each green pixel's brightness data consists of these 6 bits pixel data.
B5 B4 B3 B2 B1 B0	Blue Data 5 (MSB) Blue Data 4 Blue Data 3 Blue Data 2 Blue Data 1 Blue Data 0 (LSB) Blue-pixel Data	Blue-pixel Data Each blue pixel's brightness data consists of these 6 bits pixel data.
RxCLKIN	Data Clock	The typical frequency is 68.9 MHZ.. The signal is used to strobe the pixel data and DE signals. All pixel data shall be valid at the falling edge when the DE signal is high.
DE	Display Timing	This signal is strobed at the falling edge of RxCLKIN. When the signal is high, the pixel data shall be valid to be displayed.
VS	Vertical Sync	The signal is synchronized to RxCLKIN .
HS	Horizontal Sync	The signal is synchronized to RxCLKIN .

Note: Output signals from any system shall be low or High-impedance state when VDD is off.

6.3 Integration Interface and Pin Assignment

LVDS is a differential signal technology for LCD interface and high speed data transfer device.

PIN#	Signal Name	Description
1	GND	Ground
2	VDD	Power Supply +3.3V
3	VDD	Power Supply +3.3V
4	VEDID	EDID +3.3V Power
5	NC	No Connect (Reserve for M1 aging)
6	CLKEDID	EDID Clock Input
7	DATAEDID	EDID Data Input
8	RxOIN0-	-LVDS Differential Data INPUT(Odd R0-R5,G0)
9	RxOIN0+	+LVDS Differential Data INPUT(Odd R0-R5,G0)
10	GND	Ground
11	RxOIN1-	-LVDS Differential Data INPUT(Odd G1-G5,B0-B1)
12	RxOIN1+	+LVDS Differential Data INPUT(Odd G1-G5,B0-B1)
13	GND	Ground
14	RxOIN2-	-LVDS Differential Data INPUT(Odd B2-B5,HS,VS,DE)
15	RxOIN2+	+LVDS Differential Data INPUT(Odd B2-B5,HS,VS,DE)
16	GND	Ground
17	RxOCKIN-	-LVDS Odd Differential Clock INPUT
18	RxOCKIN+	-LVDS Odd Differential Clock INPUT
19	GND	Ground
20	NC	No connect (Reserve for AUO test)
21	NC	No connect (Reserve for AUO test)
22	GND	Ground
23	NC	No connect (Reserve for AUO test)
24	NC	No connect (Reserve for AUO test)
25	GND	Ground
26	NC	No connect (Reserve for AUO test)
27	NC	No connect (Reserve for AUO test)
28	NC	No connect (Reserve for AUO test)
29	NC	No connect (Reserve for AUO test)
30	NC	No connect (Reserve for AUO test)
31	**VLED_GND**	**LED Ground**
32	**VLED_GND**	**LED Ground**
33	**VLED_GND**	**LED Ground**
34	**VLED**	**LED Power Supply 7V-20V**

35	VLED	LED Power Supply 7V-20V
36	VLED	LED Power Supply 7V-20V
37	VLED	LED Power Supply 7V-20V
38	S_PWMIN	System PWM signal Input
39	LED_EN	LED Enable Pin(+3V Input)
40	NC	No connect (Reserve for AUO test)

Note1: Start from right side

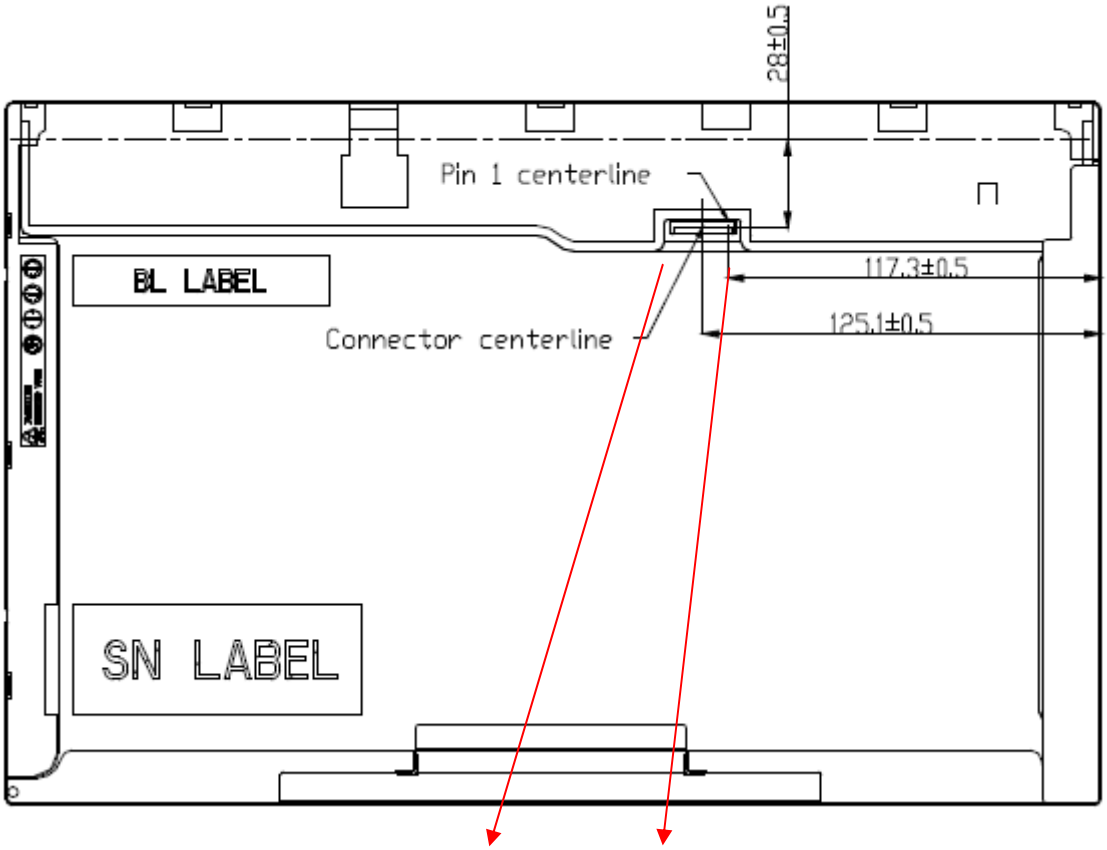

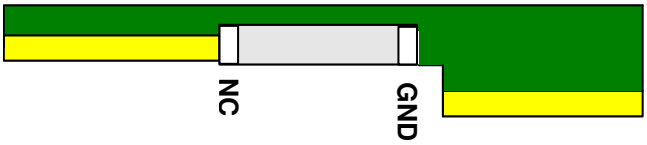

Connector: IPEX 20347-340E-12

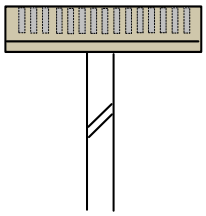

Note2: Input signals shall be low or High-impedance state when VDD is off.

internal circuit of LVDS inputs are as following.
The module uses a 100ohm resistor between positive and negative data lines of each receiver input

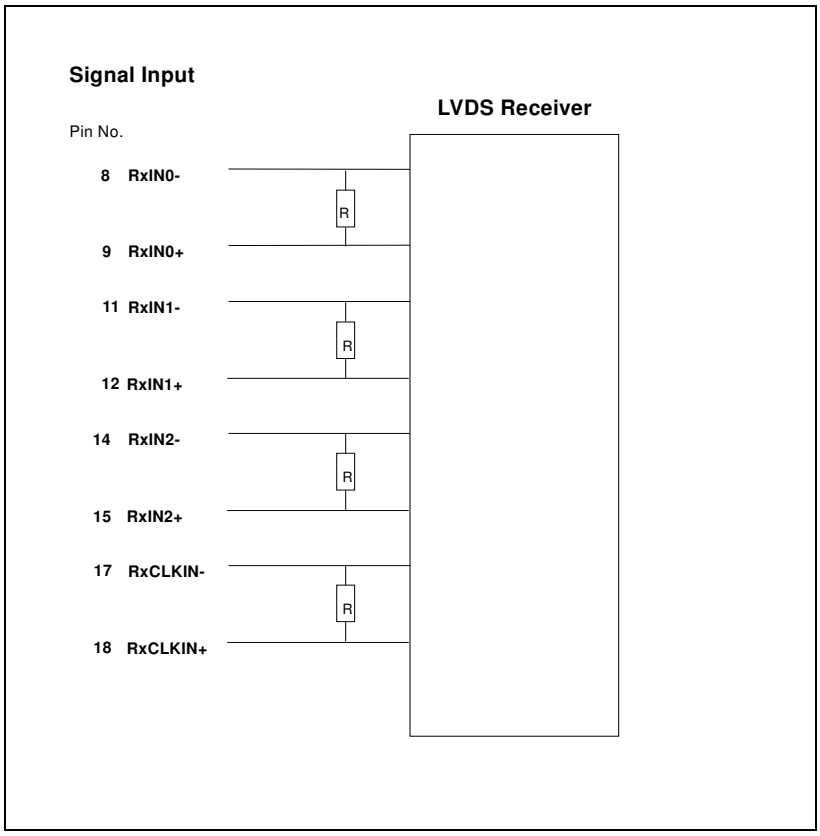

6.4 Interface Timing

6.4.1 Timing Characteristics

Basically, interface timings should match the 1280x800 /60Hz manufacturing guide line timing.

Parameter		Symbol	Min.	Typ.	Max.	Unit
Frame Rate		-	50	60	-	Hz
Clock frequency		1/ T_{Clock}	50	68.9	80	MHz
Vertical Section	Period	T_V	803	816	1023	T_{Line}
	Active	T_{VD}	800	800	800	
	Blanking	T_{VB}	3	16	223	
Horizontal Section	Period	T_H	1303	1408	2047	T_{Clock}
	Active	T_{HD}	-	1280	-	
	Blanking	T_{HB}	23	128	767	

Note : DE mode only

6.4.2 Timing diagram

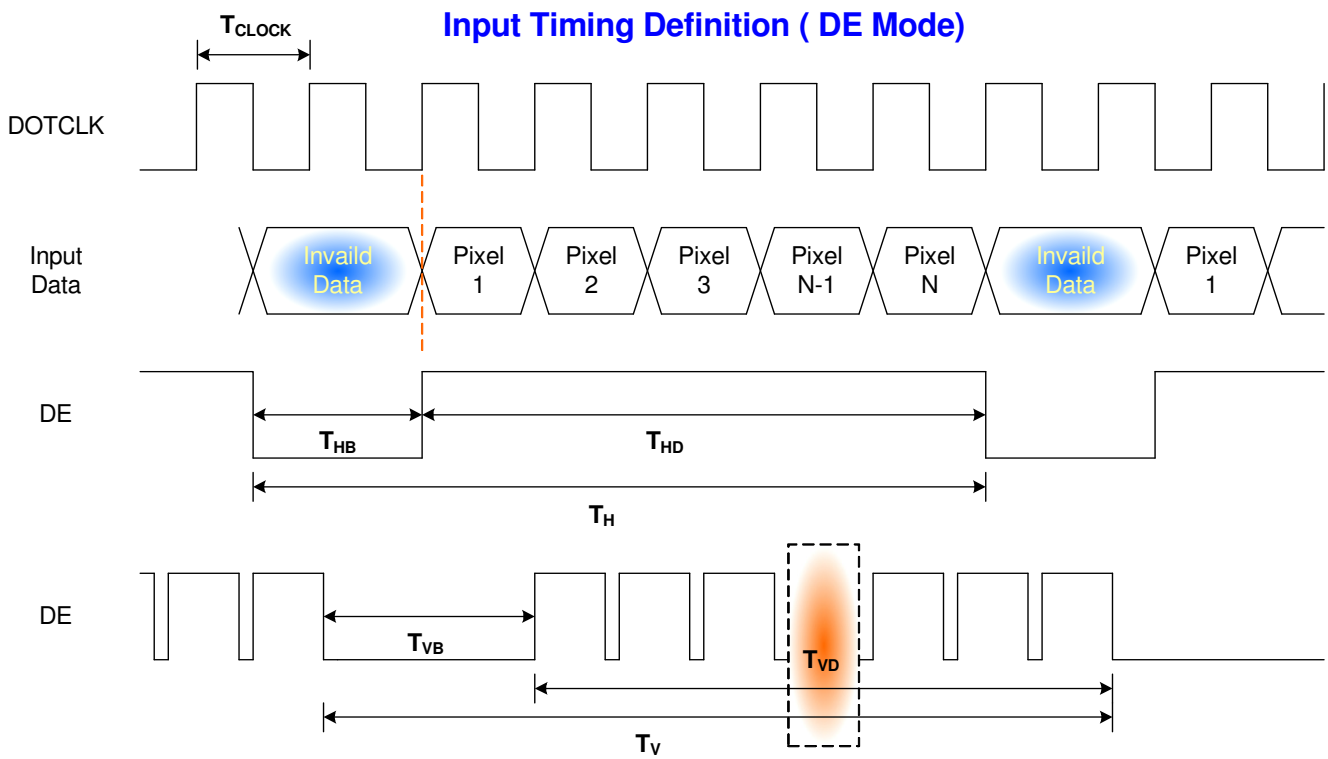

6.5 Power ON/OFF Sequence

VDD power and lamp on/off sequence is as follows. Interface signals are also shown in the chart. Signals from any system shall be Hi-Z state or low level when VDD is off.

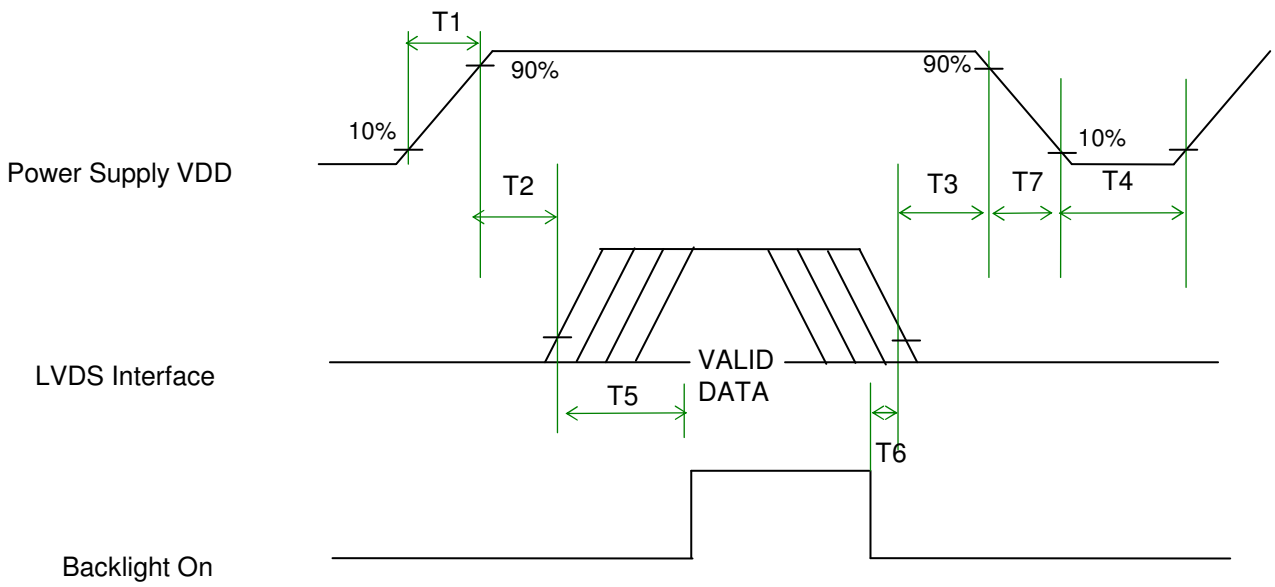

Power Sequence Timing

Parameter	Value			Units
	Min.	Typ.	Max.	
T1	0.5	-	10	ms
T2	0	-	50	
T3	0	-	50	
T4	400	-	-	
T5	200	-	-	
T6	200	-	-	
T7	0	-	10	

LED on/off sequence is as follows. Interface signals are also shown in the chart.

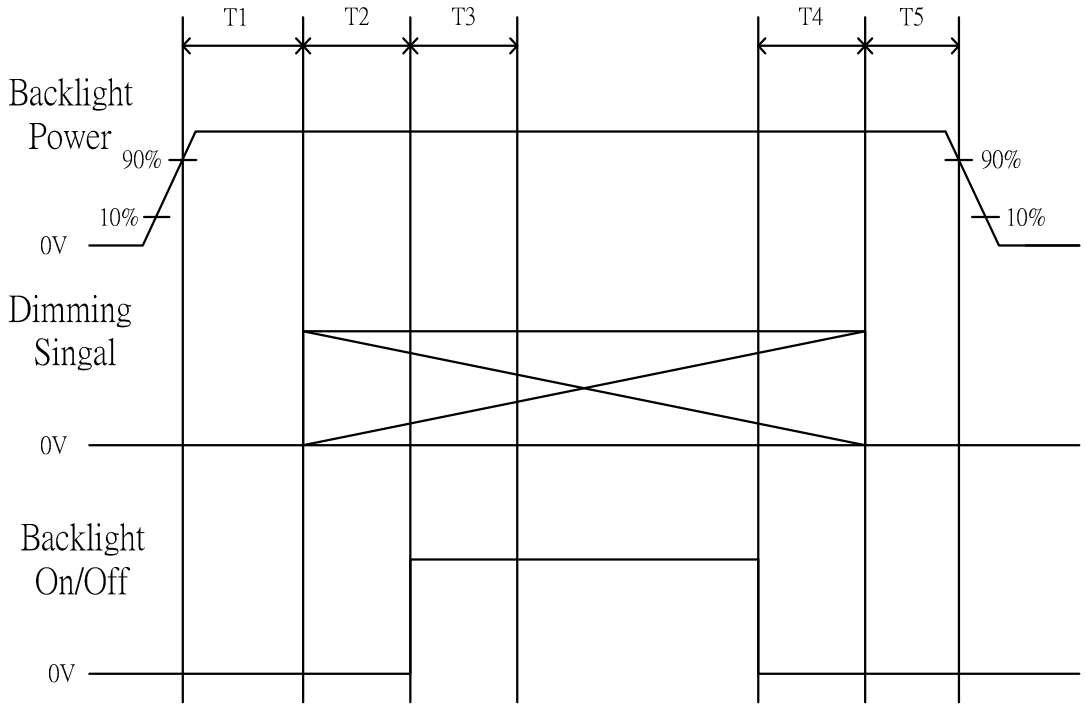

Symbol	Values			Unit
	Min	Typ	Max	
T1	10	---	---	ms
T2	10	---	---	ms
T3	50	---	---	ms
T4	0	---	---	ms
T5	10	---	---	ms

Note: The duty of LED dimming signal should be more than 20% in T2 and T3.

7. Connector Description

Physical interface is described as for the connector on module.

These connectors are capable of accommodating the following signals and will be following components.

7.1 TFT LCD Module

Connector Name / Designation	**For Signal Connector**
Manufacturer	IPEX or compatible
Type / Part Number	IPEX 20347-340E-12 or compatible
Mating Housing/Part Number	IPEX 20347-340E-12 or compatible

8. LED Driving Specification

8.1 Connector Description

It is an intergrative interface and comibe into LVDS connector. The type and mating refer to section 7.

8.2 Pin Assignment

Ref. to 6.3

PIN#	Signal Name	Description
31	VLED_GND	LED Ground
32	VLED_GND	LED Ground
33	VLED_GND	LED Ground
34	VLED	LED Power Supply 7V-20V
35	VLED	LED Power Supply 7V-20V
36	VLED	LED Power Supply 7V-20V
37	VLED	LED Power Supply 7V-20V
38	S_PWMIN	System PWM signal Input
39	LED _EN	LED enable pin (+3V input)
40	NC	No Connect (Reserve for AUO)

9. Vibration and Shock Test

9.1 Vibration Test

Test Spec:

- Test method: Non-Operation
- Acceleration: 1.5 G
- Frequency: 10 - 500Hz Random
- Sweep: 30 Minutes each Axis (X, Y, Z)

9.2 Shock Test Spec:

Test Spec:

- Test method: Non-Operation
- Acceleration: 220 G , Half sine wave
- Active time: 2 ms
- Pulse: X,Y,Z .one time for each side

10. Reliability

Items	Required Condition	Note
Temperature Humidity Bias	Ta= 40℃, 90%RH, 300h	
High Temperature Operation	Ta= 50℃, Dry, 300h	
Low Temperature Operation	Ta= 0℃, 300h	
High Temperature Storage	Ta= 60℃, 35%RH, 300h	
Low Temperature Storage	Ta= -20℃, 50%RH, 250h	
Thermal Shock Test	Ta=-20℃to 60℃, Duration at 30 min, 100 cycles	
ESD	Contact : ±8 KV Air : ±15 KV	Note 1

Note1: According to EN 61000-4-2 , ESD class B: Some performance degradation allowed. No data lost

. Self-recoverable. No hardware failures.

Remark: MTBF (Excluding the LED): 30,000 hours with a confidence level 90%

11. Mechanical Characteristics

11.1 LCM Outline Dimension

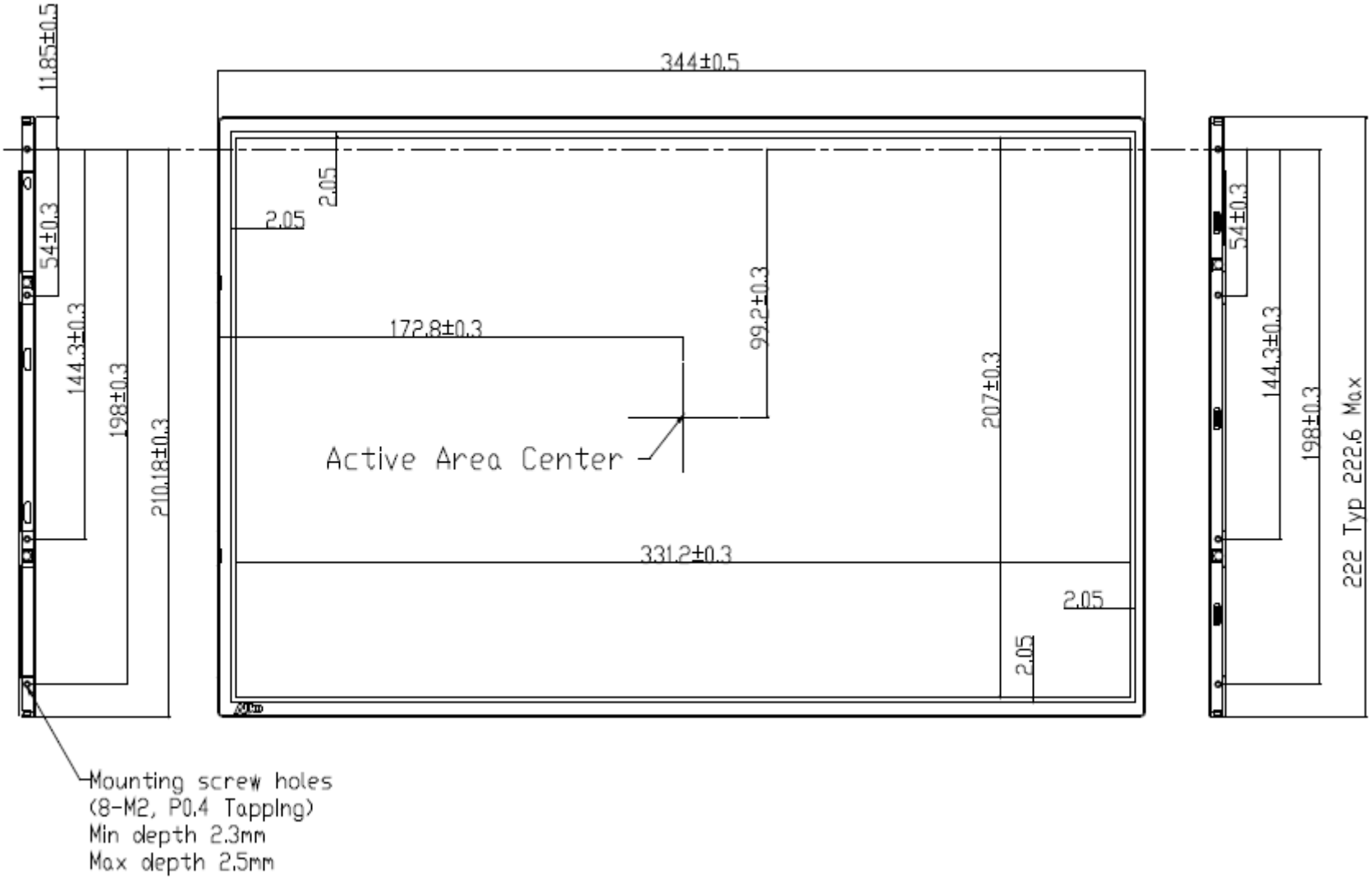

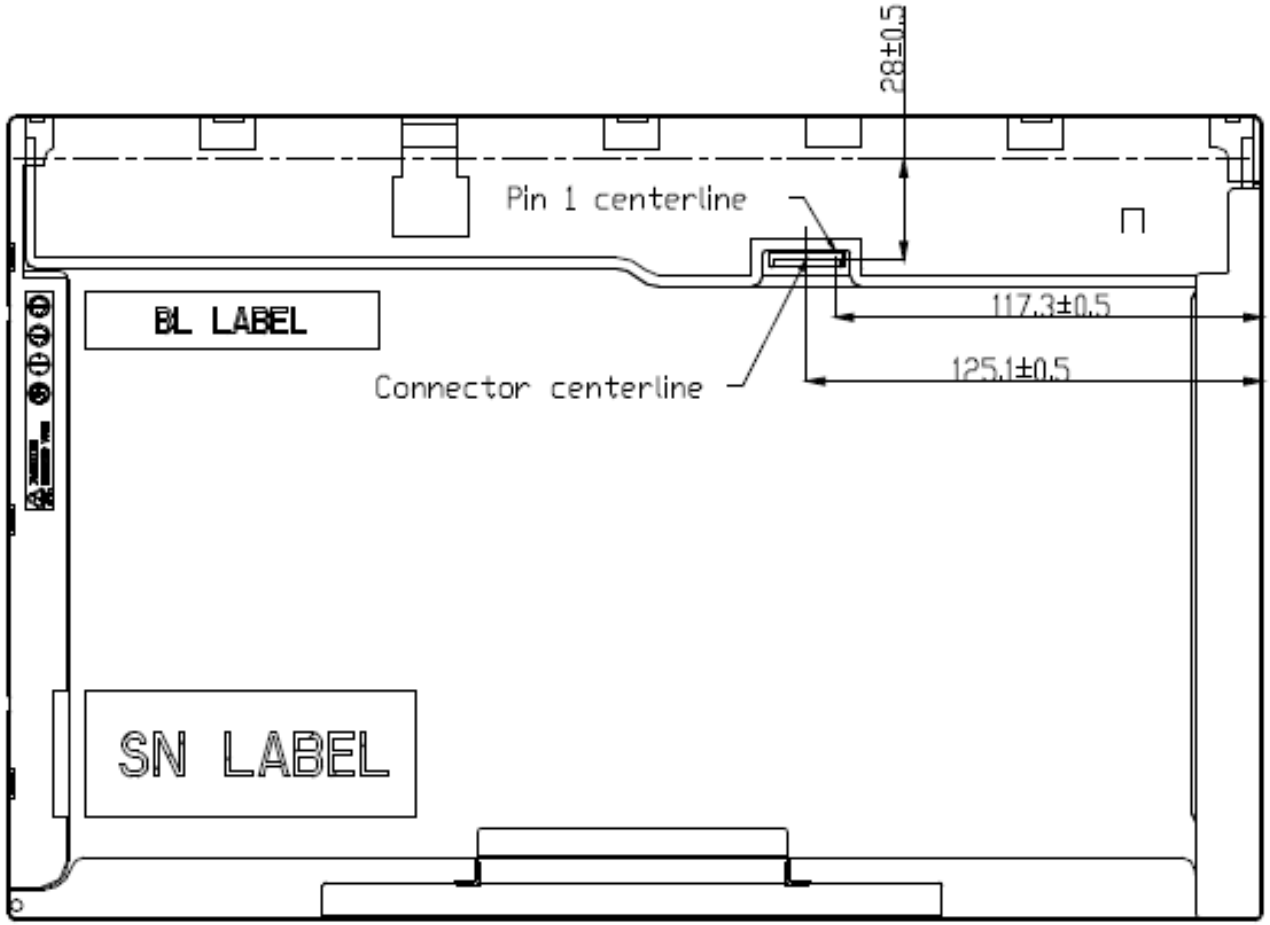

Note: Prevention IC damage, IC positions not allowed any overlap over these areas.

11.2 Screw Hole Depth and Center Position

Screw hole minimum depth, from side surface = 2.3 mm (See drawing)

Screw hole center location, from front surface = 3.7 ± 0.3mm (See drawing)
Screw Torque: Maximum 2.5 kgf-cm

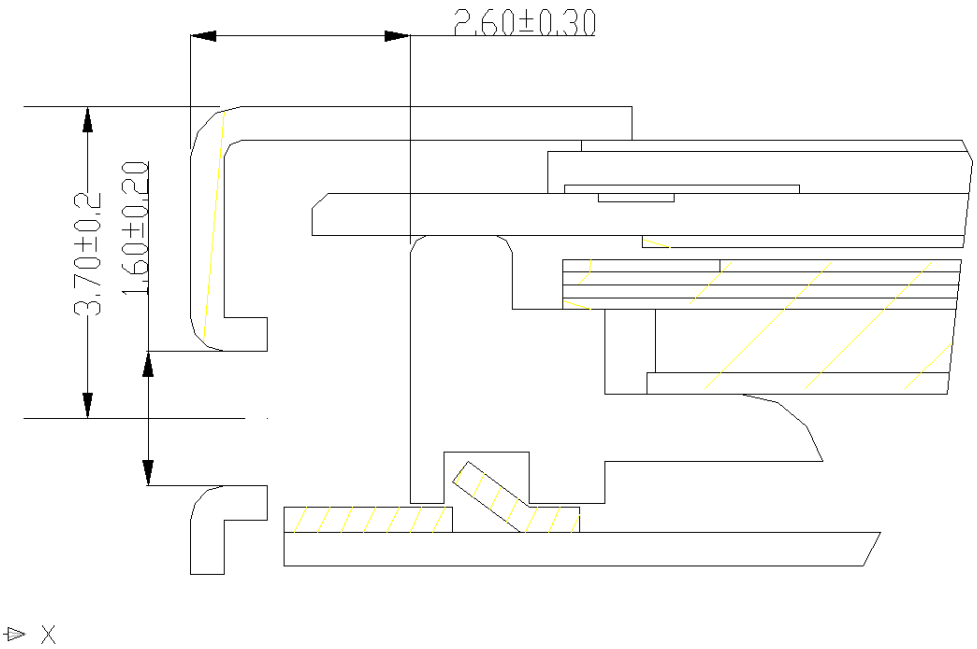

12. Shipping and Package

12.1 Shipping Label Format

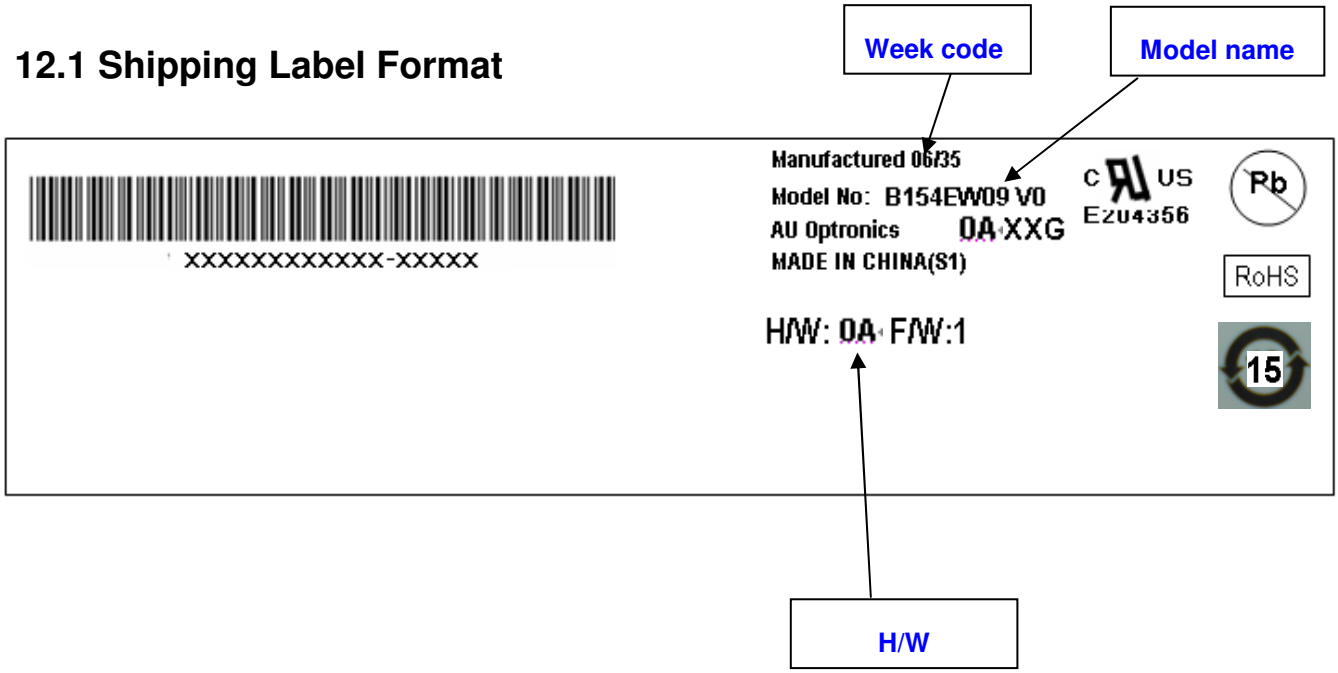

12.2 Carton package

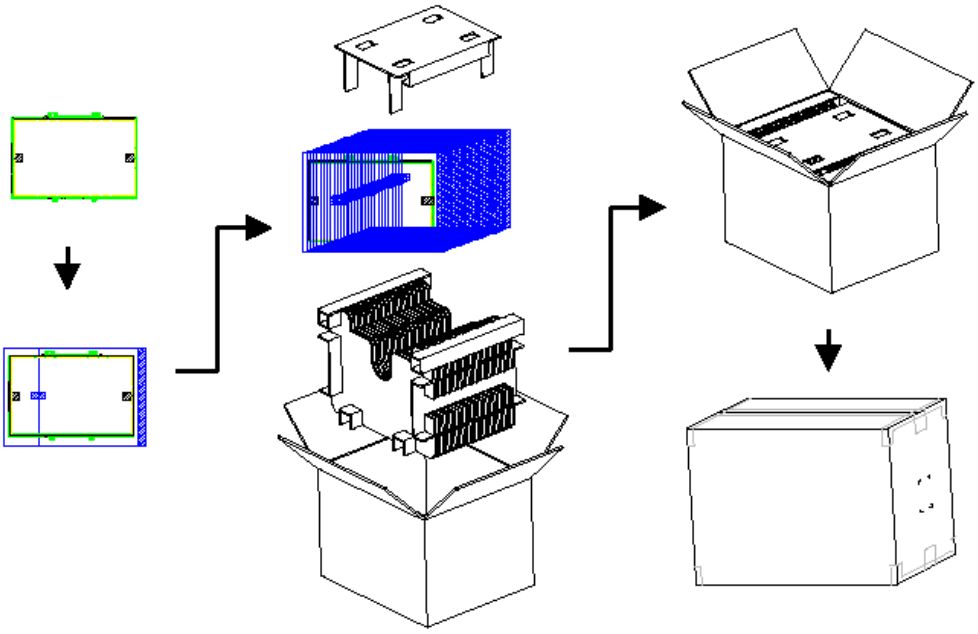

12.3 Shipping package of palletizing sequence

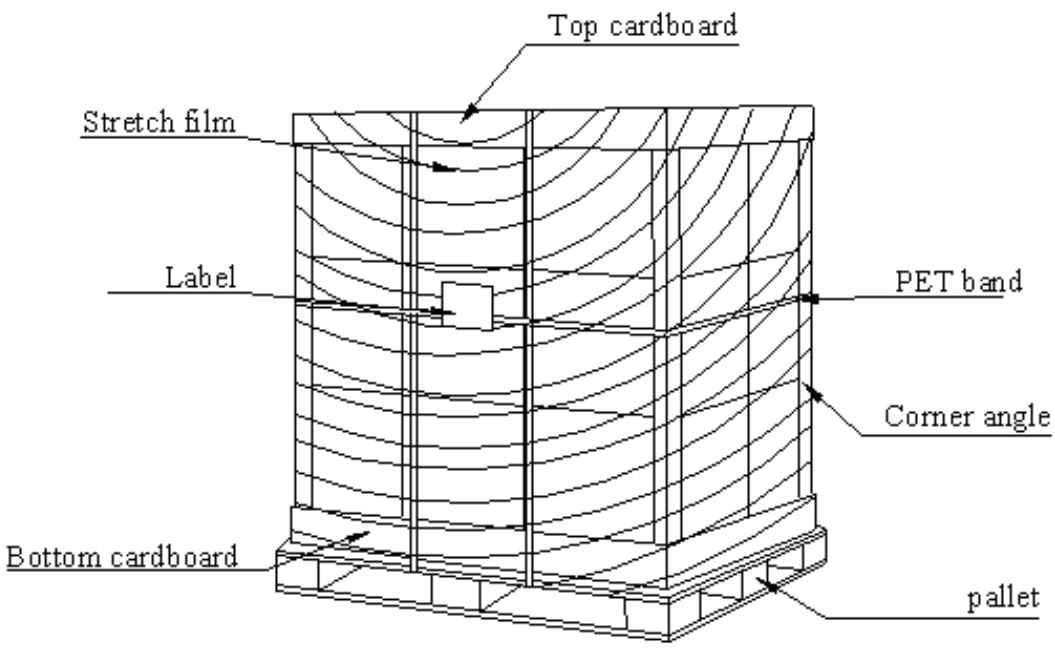

13. Appendix: EDID description

Address HEX	FUNCTION	B154EW09 HEX	Value BIN	Value DEC	Note
00	Header	00	00000000	0	
01		FF	11111111	255	
02		FF	11111111	255	
03		FF	11111111	255	
04		FF	11111111	255	
05		FF	11111111	255	
06		FF	11111111	255	
07		00	00000000	0	
08	EISA Manuf. Code LSB	06	00000110	6	
09	Compressed ASCII	AF	10101111	175	
0A	Product Code	74	01110100	116	
0B	hex, LSB first	90	10010000	144	
0C	32-bit ser #	00	00000000	0	
0D		00	00000000	0	
0E		00	00000000	0	
0F		00	00000000	0	
10	Week of manufacture	01	00000001	1	
11	Year of manufacture	12	00010010	18	
12	EDID Structure Ver.	01	00000001	1	
13	EDID revision #	03	00000011	3	
14	Video input def. (digital I/P, non-TMDS, CRGB)	80	10000000	128	
15	Max H image size (rounded to cm)	21	00100001	33	
16	Max V image size (rounded to cm)	15	00010101	21	
17	Display Gamma (=(gamma*100)-100)	78	01111000	120	
18	Feature support (no DPMS, Active OFF, RGB, tmg Blk#1)	0A	00001010	10	
19	Red/green low bits (Lower 2:2:2:2 bits)	27	00100111	39	
1A	Blue/white low bits (Lower 2:2:2:2 bits)	75	01110101	117	
1B	Red x (Upper 8 bits)	98	10011000	152	
1C	Red y/ highER 8 bits	58	01011000	88	
1D	Green x	58	01011000	88	
1E	Green y	92	10010010	146	
1F	Blue x	27	00100111	39	
20	Blue y	1D	00011101	29	
21	White x	50	01010000	80	
22	White y	54	01010100	84	
23	Established timing 1	00	00000000	0	
24	Established timing 2	00	00000000	0	
25	Established timing 3	00	00000000	0	
26	Standard timing #1	01	00000001	1	
27		01	00000001	1	
28	Standard timing #2	01	00000001	1	
29		01	00000001	1	
2A	Standard timing #3	01	00000001	1	
2B		01	00000001	1	
2C	Standard timing #4	01	00000001	1	

2D		01	00000001	1
2E	Standard timing #5	01	00000001	1
2F		01	00000001	1
30	Standard timing #6	01	00000001	1
31		01	00000001	1
32	Standard timing #7	01	00000001	1
33		01	00000001	1
34	Standard timing #8	01	00000001	1
35		01	00000001	1
36	Pixel Clock/10000 LSB	C7	11000111	199
37	Pixel Clock/10000 USB	1B	00011011	27
38	Horz active Lower 8bits	00	00000000	0
39	Horz blanking Lower 8bits	9E	10011110	158
3A	HorzAct:HorzBlnk Upper 4:4 bits	50	01010000	80
3B	Vertical Active Lower 8bits	20	00100000	32
3C	Vertical Blanking Lower 8bits	18	00011000	24
3D	Vert Act : Vertical Blanking (upper 4:4 bit)	30	00110000	48
3E	HorzSync. Offset	30	00110000	48
3F	HorzSync.Width	20	00100000	32
40	VertSync.Offset : VertSync.Width	36	00110110	54
41	Horz&Vert Sync Offset/Width Upper 2bits	00	00000000	0
42	Horizontal Image Size Lower 8bits	4B	01001011	75
43	Vertical Image Size Lower 8bits	CF	11001111	207
44	Horizontal & Vertical Image Size (upper 4:4 bits)	10	00010000	16
45	Horizontal Border (zero for internal LCD)	00	00000000	0
46	Vertical Border (zero for internal LCD)	00	00000000	0
47	Signal (non-intr, norm, no stero, sep sync, neg pol)	18	00011000	24
48	Detailed timing/monitor	00	00000000	0
49	descriptor #2	00	00000000	0
4A		00	00000000	0
4B		0F	00001111	15
4C		00	00000000	0
4D		00	00000000	0
4E		00	00000000	0
4F		00	00000000	0
50		00	00000000	0
51		00	00000000	0
52		00	00000000	0
53		00	00000000	0
54		00	00000000	0
55		00	00000000	0
56		00	00000000	0
57		00	00000000	0
58		00	00000000	0
59		20	00100000	32
5A	Detailed timing/monitor	00	00000000	0
5B	descriptor #3	00	00000000	0
5C		00	00000000	0

5D		FE	11111110	254	
5E		00	00000000	0	
5F	Manufacture	41	01000001	65	A
60	Manufacture	55	01010101	85	U
61	Manufacture	4F	01001111	79	O
62		0A	00001010	10	
63		20	00100000	32	
64		0	00000000	0	
65		20	00100000	32	
66		20	00100000	32	
67		20	00100000	32	
68		20	00100000	32	
69		20	00100000	32	
6A		20	00100000	32	
6B		20	00100000	32	
6C	Detailed timing/monitor	00	00000000	0	
6D	descriptor #4	00	00000000	0	
6E		00	00000000	0	
6F		FE	11111110	254	
70		00	00000000	0	
71	Manufacture P/N	42	01000010	66	B
72	Manufacture P/N	31	00110001	49	1
73	Manufacture P/N	35	00110101	53	5
74	Manufacture P/N	34	00110100	52	4
75	Manufacture P/N	45	01000101	69	E
76	Manufacture P/N	57	01010111	87	W
77	Manufacture P/N	30	00110000	48	0
78	Manufacture P/N	39	00111001	57	9
79	Manufacture P/N	20	00100000	32	
7A	Manufacture P/N	56	01010110	86	V
7B	Manufacture P/N	30	00110000	48	0
7C		20	00100000	32	
7D		0A	00001010	10	
7E	Extension Flag	00	00000000	0	
7F	Checksum	C5	11000101	197	
			SUM	6144	
			SUM to HEX	1800	
			Check	00	