Product Specification

AU OPTRONICS CORPORATION

(V) Preliminary Specifications
( ) Final Specifications

Module	15.4” WXGA+ Color TFT-LCD
Model Name	B154PW04 V0

Customer	**Date**	**Approved by**	**Date**
		Jerry Chen	2007/07/10
Checked & Approved by		**Prepared by**	
		Matt Ke	2007/07/10
Note: This Specification is subject to change without notice.		NBBU Marketing Division / AU Optronics corporation	

Contents

Record of Revision

Version and Date	Page	Old description	New Description	Remark
0.1 2007/06/18	All	First Edition for Customer		
0.2 2007/07/10	27		LCM drawing update	

1. Handling Precautions

1) Since front polarizer is easily damaged, pay attention not to scratch it.
2) Be sure to turn off power supply when inserting or disconnecting from input connector.
3) Wipe off water drop immediately. Long contact with water may cause discoloration or spots.
4) When the panel surface is soiled, wipe it with absorbent cotton or other soft cloth.
5) Since the panel is made of glass, it may break or crack if dropped or bumped on hard surface.
6) Since CMOS LSI is used in this module, take care of static electricity and insure human earth when handling.
7) Do not open nor modify the Module Assembly.
8) Do not press the reflector sheet at the back of the module to any directions.
9) In case if a Module has to be put back into the packing container slot after once it was taken out from the container, do not press the center of the CCFL Reflector edge. Instead, press at the far ends of the CFL Reflector edge softly. Otherwise the TFT Module may be damaged.
10) At the insertion or removal of the Signal Interface Connector, be sure not to rotate nor tilt the Interface Connector of the TFT Module.
11) After installation of the TFT Module into an enclosure (Notebook PC Bezel, for example), do not twist nor bend the TFT Module even momentary. At designing the enclosure, it should be taken into consideration that no bending/twisting forces are applied to the TFT Module from outside. Otherwise the TFT Module may be damaged.
12) Cold cathode fluorescent lamp in LCD contains a small amount of mercury. Please follow local ordinances or regulations for disposal.
13) Small amount of materials having no flammability grade is used in the LCD module. The LCD module should be supplied by power complied with requirements of Limited Power Source(, IEC60950 or UL1950), or be applied exemption.
14) The LCD module is designed so that the CCFL in it is supplied by Limited Current Circuit(IEC60950 or UL1950). Do not connect the CCFL in Hazardous Voltage Circuit.

2. General Description

B154PW04 V0 is a Color Active Matrix Liquid Crystal Display composed of a TFT LCD panel, a driver circuit, and backlight system. The screen format is intended to support the WXGA+ (1440(H) x 900(V)) screen and 262k colors (RGB 6-bits data driver). All input signals are LVDS interface compatible. Inverter of backlight is not included.

B154PW04 V0 is designed for a display unit of notebook style personal computer and industrial machine.

2.1 General Specification

The following items are characteristics summary on the table at 25 ℃ condition:

Items	Unit	Specifications
Screen Diagonal	[mm]	391 (15.4W”)
Active Area	[mm]	331.560 (H) x 207.225 (V)
Pixels H x V		1440x3(RGB) x 900
Pixel Pitch	[mm]	0.23025X0.23025
Pixel Arrangement		R.G.B. Vertical Stripe
Display Mode		Normally White
White Luminance (I_{CCFL}=19mA) Note: I_{LED} is LED current	[cd/m^2]	330 typ. (5 points average) 300 min. (5 points average) (Note1)
Luminance Uniformity		1.25 max. (5 points)
Contrast Ratio		400 typ
Optical Rise Time/Fall Time	[msec]	4/12 typ.
Nominal Input Voltage VDD	[Volt]	+3.3 typ.
Power Consumption	[Watt]	4.8 max
Weight	[Grams]	430 typ. 450 max.
Physical Size	[mm]	344.0 typ. x 222.0 typ. x 6.1 max.
Electrical Interface		2 channel LVDS
Surface Treatment		Anti-Glare, Hardness 2H
Support Color		262K colors (RGB 6-bit)
Temperature Range Operating Storage (Non-Operating)	 [^{o}C] [^{o}C]	 0 to +50 -20 to +60
RoHS Compliance		RoHS Compliance

2.2 Optical Characteristics

The optical characteristics are measured under stable conditions at 25℃ (Room Temperature):

Item	Unit	Conditions	Min.	Typ.	Max.	Note
White Luminance I_{LED}=19mA	[cd/m^2]	160 points average	300	330	-	1, 3, 4.
Viewing Angle	[degree] [degree]	Horizontal (Right) CR = 10 (Left)	65 65	70 70	- -	8
	[degree] [degree]	Vertical (Upper) CR = 10 (Lower)	65 60	60 60	- -	
Luminance Uniformity		5 Points			1.25	1
Luminance Uniformity		13 Points			1.50	2
Response Time	[msec]	Rising	-	4	8	7
	[msec]	Falling	-	12	17	
	[msec]	Rising + Falling		16	25	
Color / Chromaticity Coordinates (CIE 1931)		Red x	0.570	0.600	0.630	2,7
		Red y	0.315	0.345	0.375	
		Green x	0.290	0.320	0.350	
		Green y	0.525	0.555	0.585	
		Blue x	0.120	0.150	0.180	
		Blue y	0.090	0.120	0.150	
		White x	0.290	0.313	0.343	
		White y	0.299	0.329	0.359	

Note 1: 5 points position (Display area : 331.2mm x 207.0mm)

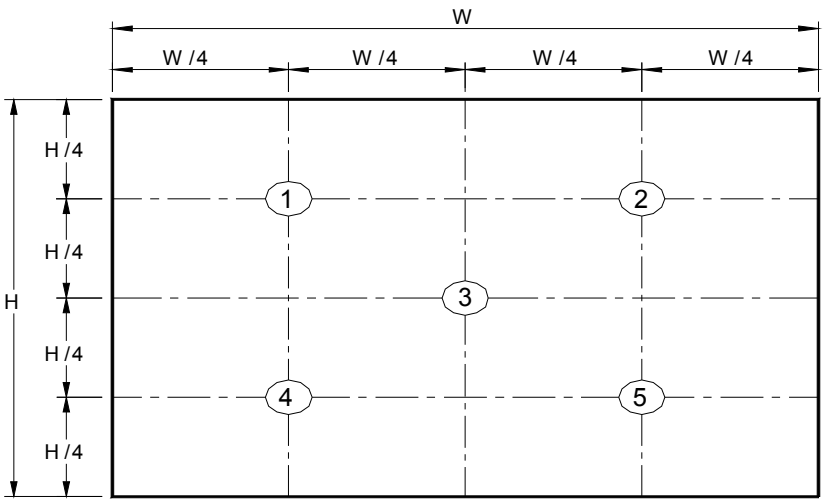

Note 2: 13 points position

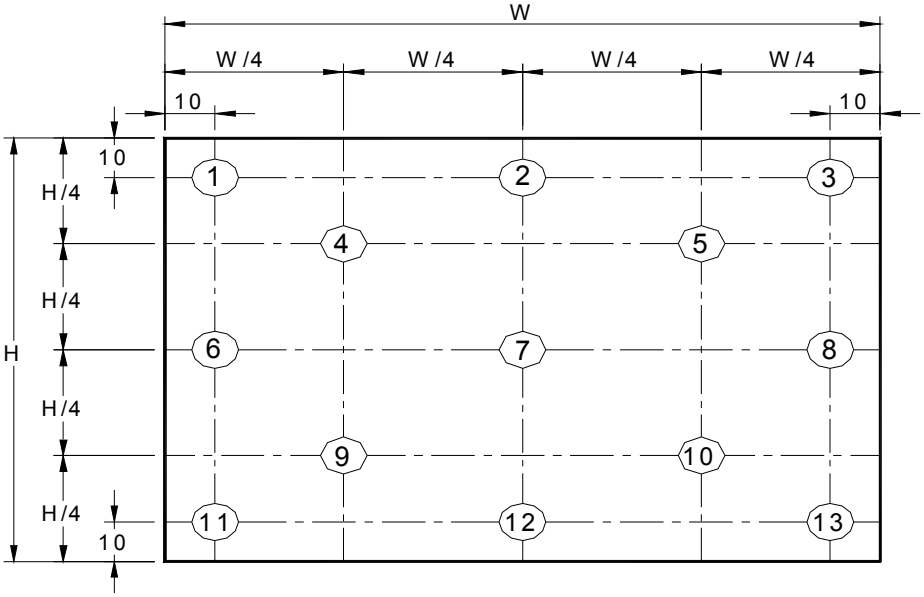

Note 3: The luminance uniformity of 5 and 13 points is defined by dividing the maximum luminance values by the minimum test point luminance

$$\delta_{W5} = \frac{\text{Maximum Brightness of five points}}{\text{Minimum Brightness of five points}}$$

$$\delta_{W13} = \frac{\text{Maximum Brightness of thirteen points}}{\text{Minimum Brightness of thirteen points}}$$

Note 4: Measurement method

The LCD module should be stabilized at given temperature for 30 minutes to avoid abrupt temperature change during measuring. In order to stabilize the luminance, the measurement should be executed after lighting Backlight for 30 minutes in a stable, windless and dark room.

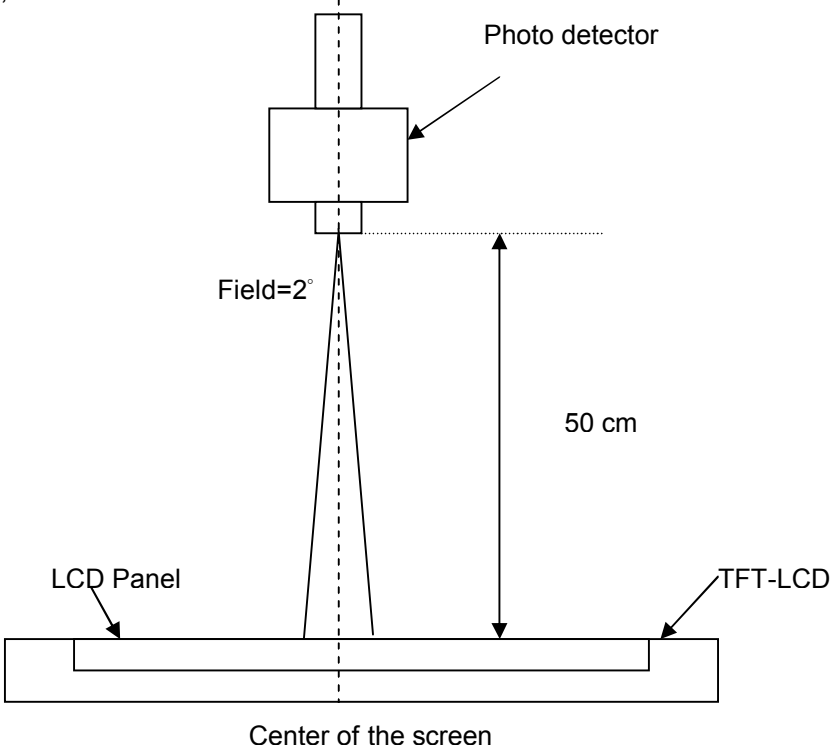

Note 5： Definition of Average Luminance of White (Y_L):

Measure the luminance of gray level 63 at 5 points，Y_L = [L (1)+ L (2)+ L (3)+ L (4)+ L (5)] / 5

L (x) is corresponding to the luminance of the point X at Figure in Note (1).

Note 6： Definition of contrast ratio:

Contrast ratio is calculated with the following formula.

$$\text{Contrast ratio (CR)} = \frac{\text{Brightness on the “White” state}}{\text{Brightness on the “Black” state}}$$

Note 7： Definition of Cross Talk (CT)

$CT = | Y_B – Y_A | / Y_A \times 100$ (%)

Where

Y_A = Luminance of measured location without gray level 0 pattern (cd/m2)

Y_B = Luminance of measured location with gray level 0 pattern (cd/m2)

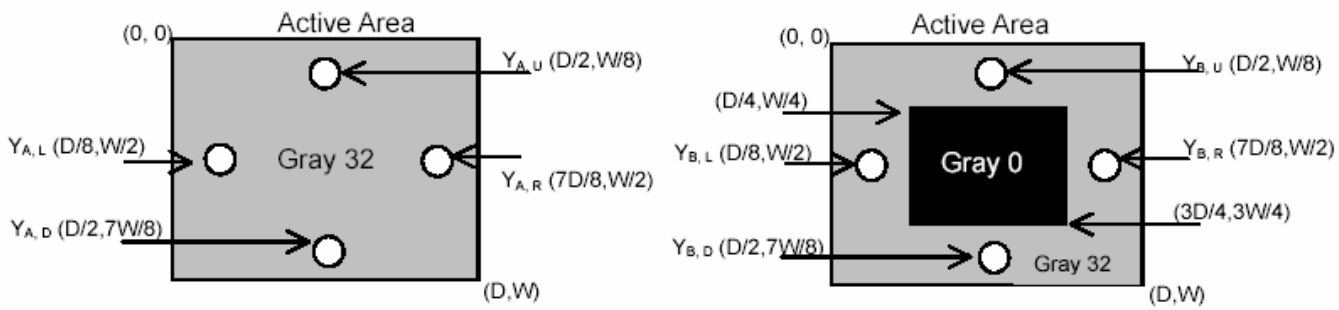

Note 8: Definition of response time:

The output signals of BM-7 or equivalent are measured when the input signals are changed from“Black” to “White” (falling time) and from “White” to “Black” (rising time), respectively. The response time interval between the 10% and 90% of amplitudes. Refer to figure as below.

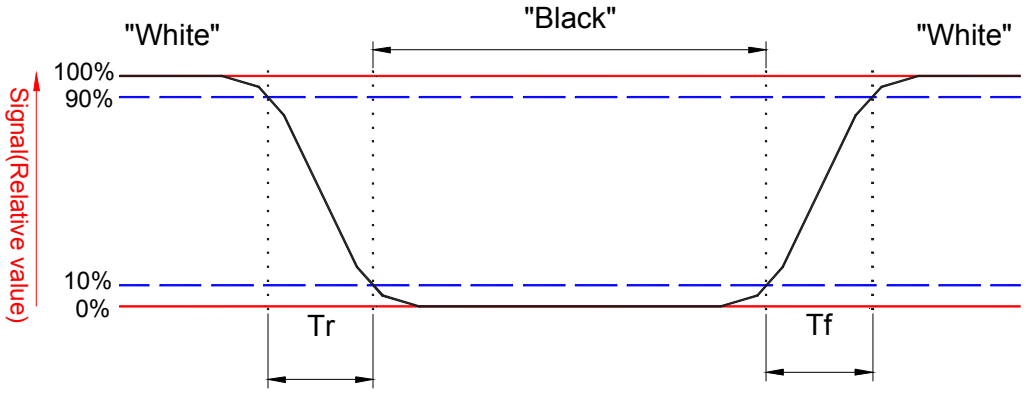
"White"
"Black"
"White"
100%
90%
10%
0%
Signal(Relative value)
Tr
Tf

Note 9. Definition of viewing angle

Viewing angle is the measurement of contrast ratio ≧10, at the screen center, over a 180° horizontal and 180° vertical range (off-normal viewing angles). The 180° viewing angle range is broken down as follows; 90° (θ) horizontal left and right and 90° (Φ) vertical, high (up) and low (down). The measurement direction is typically perpendicular to the display surface with the screen rotated about its center to develop the desired measurement viewing angle.

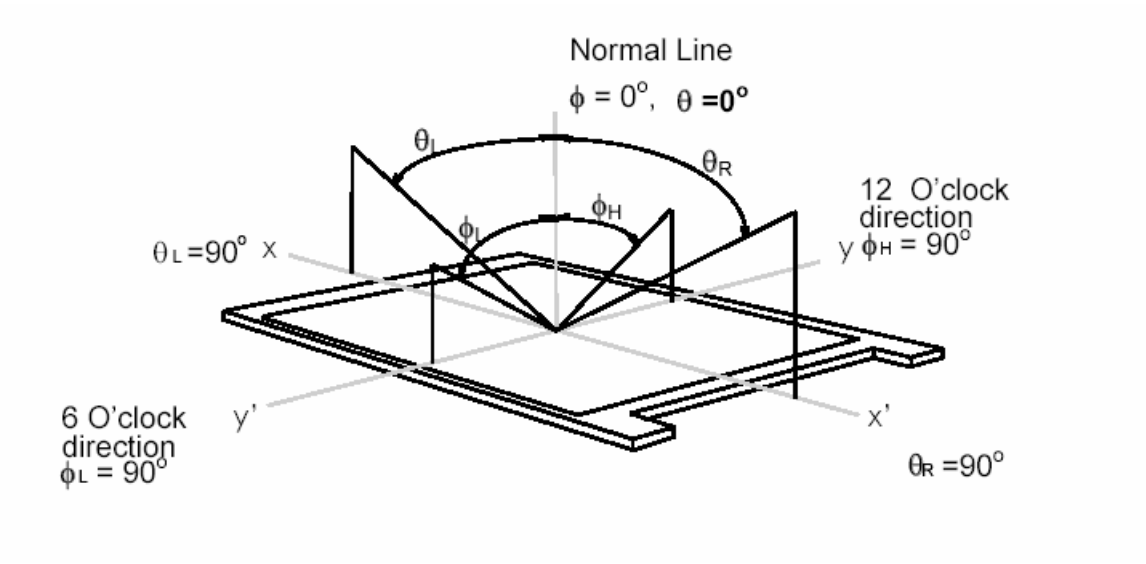

3. Functional Block Diagram

The following diagram shows the functional block of the 15.4WXGA+ TFT/LCD Module:

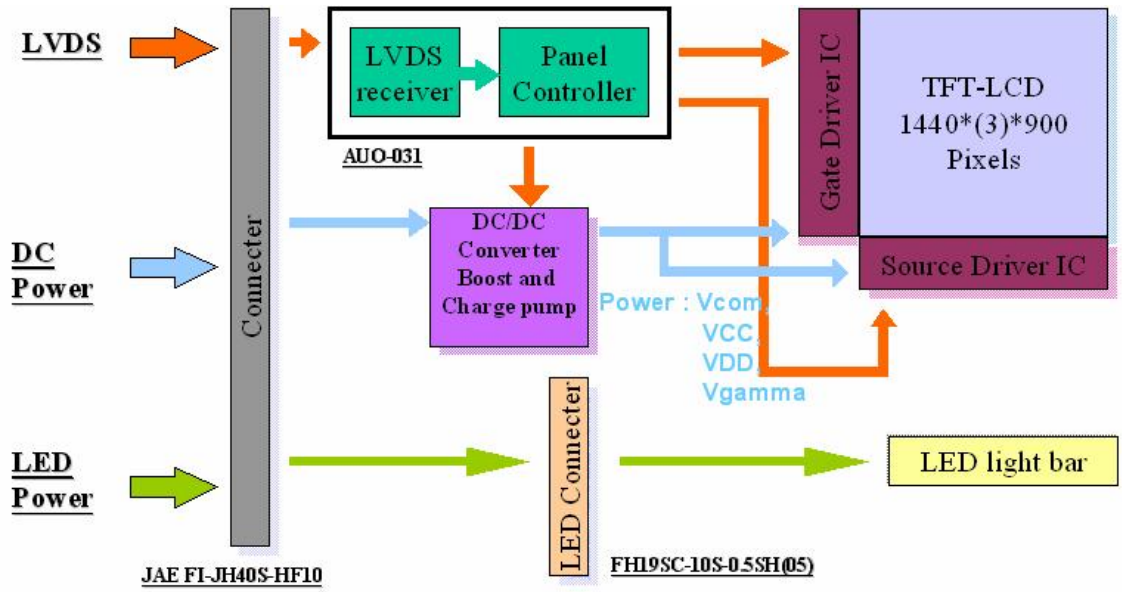

4. Absolute Maximum Ratings

Absolute maximum ratings of the module is as following:

4.1 Absolute Ratings of TFT LCD Module

Item	Symbol	Min	Max	Unit	Conditions
Logic/LCD Drive	Vin	-0.3	+4.0	[Volt]	Note 1,2

4.2 Absolute Ratings of Backlight Unit

Item	Symbol	Min	Max	Unit	Conditions
LED Current	ILED	-	20	[mA] rms	Note 1,2

4.3 Absolute Ratings of Environment

Item	Symbol	Min	Max	Unit	Conditions
Operating Temperature	TOP	0	+50	[°C]	Note 3
Operation Humidity	HOP	--	95	[%RH]	Note 3
Storage Temperature	TST	-20	+60	[°C]	Note 3
Storage Humidity	HST	5	95	[%RH]	Note 3

Note 1: At Ta (25℃)

Note 2: Permanent damage to the device may occur if exceed maximum values

Note 3: For quality performance, please refer to AUO IIS(Incoming Inspection Standard).

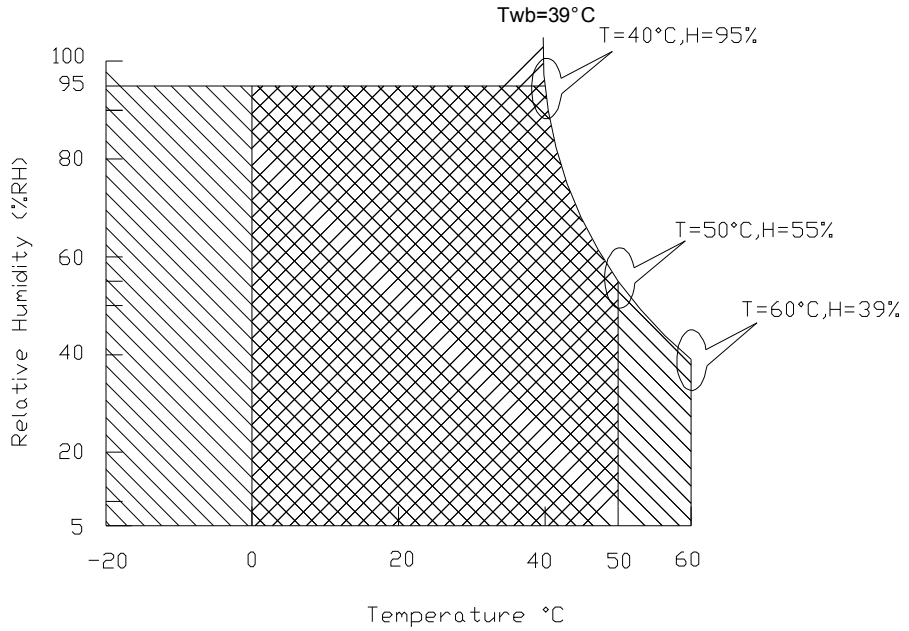

Operating Range Storage Range +

5. Electrical characteristics

5.1 TFT LCD Module

5.1.1 Power Specification

Input power specifications are as follows;

Symble	Parameter	Min	Typ	Max	Units	Note
VDD	Logic/LCD Drive Voltage	3.0	3.3	3.6	[Volt]	
PDD	VDD Power			1.3	[Watt]	Note 1
IDD	IDD Current		280	394	[mA]	Note 1
IRush	Inrush Current			1500	[mA]	Note 2
VDDrp	Allowable Logic/LCD Drive Ripple Voltage			100	[mV] p-p	

Note 1 : Maximum Measurement Condition : Black Patterm

Note 2 : Measure Condition

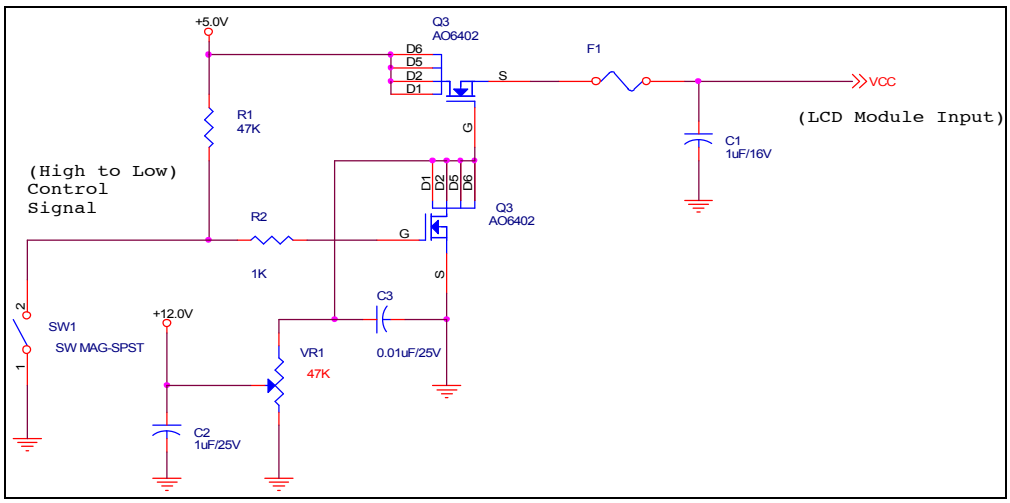

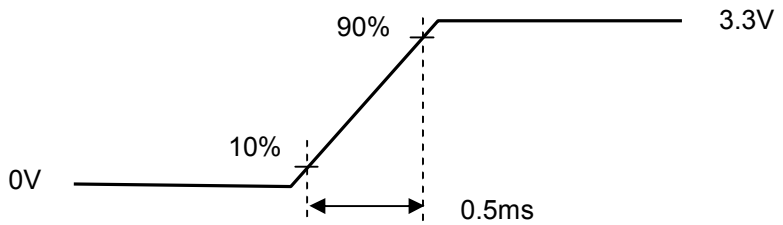

Vin rising time

5.1.2 Signal Electrical Characteristics

Input signals shall be low or High-impedance state when VDD is off.

It is recommended to refer the specifications of THC63LVDF84A(Thine Electronics Inc.) in detail.

Signal electrical characteristics are as follows:

Parameter	Condition	Min	Max	Unit
Vth	Differential Input High Threshold (Vcm=+1.2V)		100	[mV]
Vtl	Differential Input Low Threshold (Vcm=+1.2V)	-100		[mV]
Vcm	Differential Input Common Mode Voltage	1.1	1.45	[V]

Note: LVDS Signal Waveform

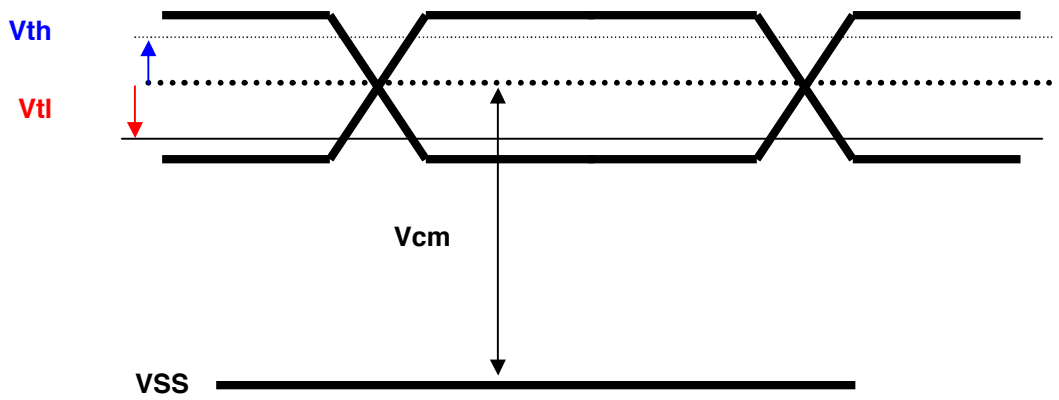

5.2 Backlight Unit

The BLU system is an edge type light soure with LED (Light Emitting Diode) light bar

Item	Symbol	Min.	Typ.	Max.	Unit	Note
Fixed input current	IL_t				mA_{rms}	Absolute maximum guarantee current
Input current	IL		20		mA_{rms}	Current for each LED
Light bar Voltage	VL		3.3		V_{rms}	
Light bar Power	PL		3.96		Watt	PL= ILxVLxLED NUMBER

Light bar PIN assignment:

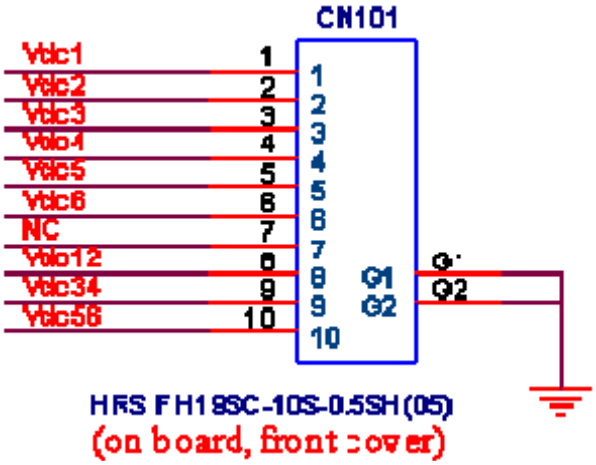

PIN NO.	SYMBOL	FUNCTION
1	Vdc1	LED Cathode (Negative)
2	Vdc2	LED Cathode (Negative)
3	Vdc3	LED Cathode (Negative)
4	Vdc4	LED Cathode (Negative)
5	Vdc5	LED Cathode (Negative)
6	Vdc6	LED Cathode (Negative)
7	NC	NC
8	Vdc(1&2)	LED Anode (Positive)
9	Vdc(3&4)	LED Anode (Positive)
10	Vdc(5&6)	LED Anode (Positive)

6. Signal Characteristic

6.1 Pixel Format Image

Following figure shows the relationship of the input signals and LCD pixel format.

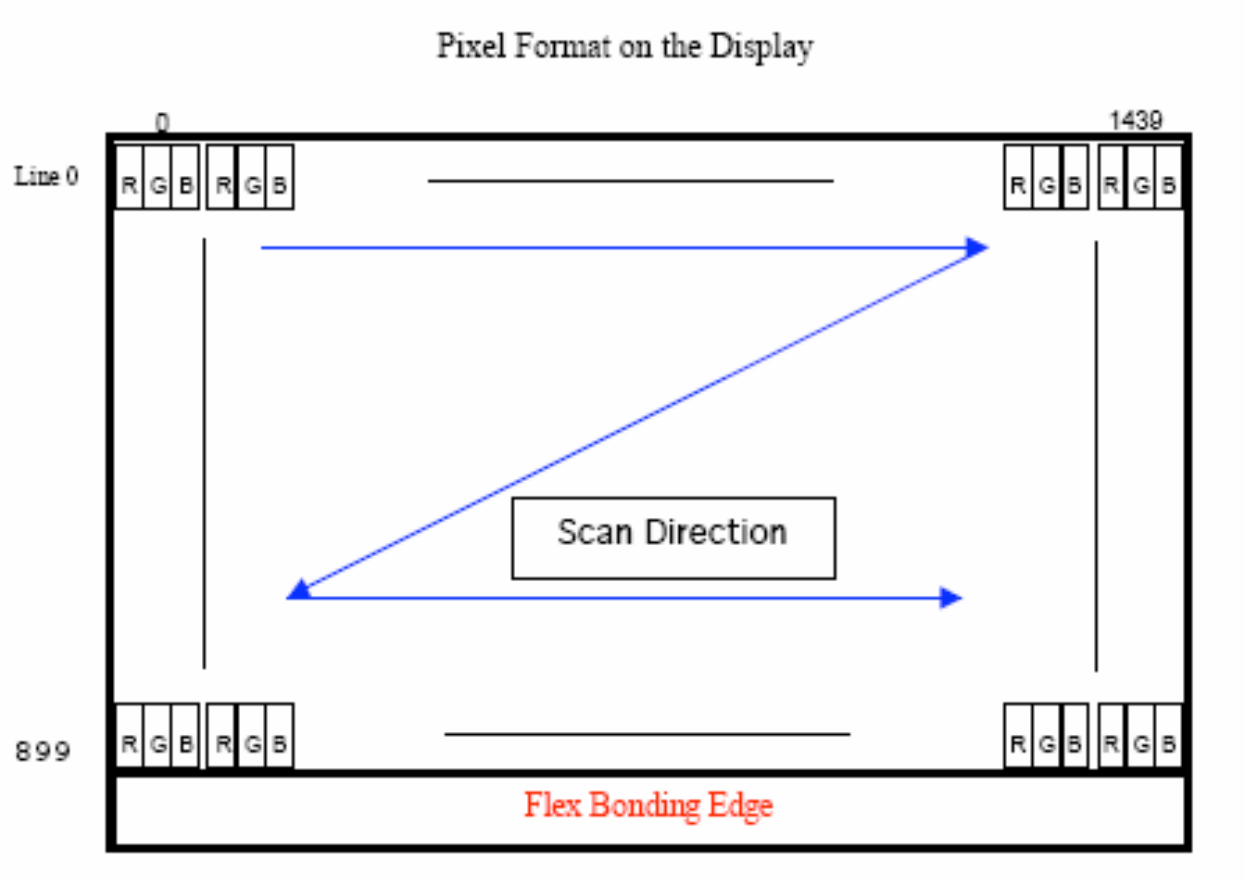

6.2 The input data format

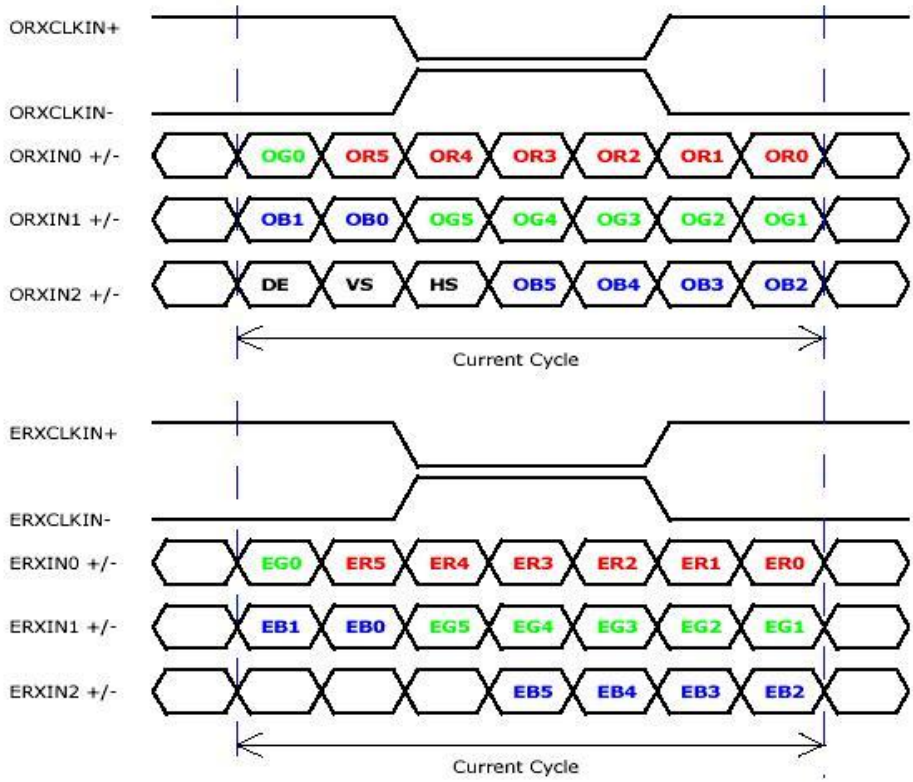

Signal Name	Description
V_{EDID}	+3.3V EDID Power
CLK_{EDID}	EDID Clock Input
$DATA_{EDID}$	EDID Data Input
ORXIN0-, ORXIN0+	Odd LVDS differential data input(ORed0-ORed5, OGreen0)
ORXIN1-, ORXIN1+	Odd LVDS differential data input(OGreen1-OGreen5, OBlue0-OBlue1)
ORXIN2-, ORXIN2+	Odd LVDS differential data input(OBlue2-OBlue5, Hsync, Vsync, DE)
ORXCLKIN-, ORXCLKIN+	Odd LVDS differential clock input
ERXIN0-, ERXIN0+	Even LVDS differential data input(ERed0-ERed5, EGreen0)
ERXIN1-, ERXIN1+	Even LVDS differential data input(EGreen1-EGreen5, EBlue0-EBlue1)
ERXIN2-, ERXIN2+	Even LVDS differential data input(EBlue2-EBlue5)
ERXCLKIN-, ERXCLKIN+	Even LVDS differential clock input
VDD	+3.3V Power Supply
GND	Ground

Note: Output signals from any system shall be low or High-impedance state when VDD is off.

6.3 Signal Description/Pin Assignment

LVDS is a differential signal technology for LCD interface and high speed data transfer device.

Pin	Symbol	Description	Micro-coax cable gauge (AWG)
1	GND	Ground	40
2	Vcc	Power Supply (+3.3V)	36
3	Vcc	Power Supply (+3.3V)	36
4	VEDID	DDC 3.3V Power	40
5	Vcc	Power Supply (+3.3V)	36
6	ClkEDID	DDC Clock	40
7	DATAEDID	DDC Data	40
8	Odd_Rin0-	Odd Channel Differential Data Input	40
9	Odd_Rin0+	Odd Channel Differential Data Input	40
10	GND	Ground	40
11	Odd_Rin1-	Odd Channel Differential Data Input	40
12	Odd_Rin1+	Odd Channel Differential Data Input	40
13	GND	Ground	40
14	Odd_Rin2-	Odd Channel Differential Data Input	40
15	Odd_Rin2+	Odd Channel Differential Data Input	40
16	GND	Ground	40
17	Odd_Clkin-	Odd Channel Differential Clock Input	40
18	Odd_Clkin+	Odd Channel Differential Clock Input	40
19	GND	Ground	40
20	Even_Rin0-	Even Channel Differential Data Input	40
21	Even_Rin0+	Even Channel Differential Data Input	40
22	GND	Ground	40
23	Even_Rin1-	Even Channel Differential Data Input	40
24	Even_Rin1+	Even Channel Differential Data Input	40
25	GND	Ground	40
26	Even_Rin2-	Even Channel Differential Data Input	40
27	Even_Rin2+	Even Channel Differential Data Input	40
28	GND	Ground	40
29	Even_Clkin-	Even Channel Differential Clock Input	40
30	Even_Clkin+	Even Channel Differential Clock Input	40
31	Vdc1	LED Cathode (Negative)	40
32	Vdc2	LED Cathode (Negative)	40
33	Vdc3	LED Cathode (Negative)	40
34	Vdc4	LED Cathode (Negative)	40
35	Vdc5	LED Cathode (Negative)	40

36	Vdc6	LED Cathode (Negative)	40
37	AGINE	AGINE PIN	40
38	Vdc(1,2)	LED Annold (Positive)	40
39	Vdc(3,4,)	LED Annold (Positive)	40
40	Vdc(5,6)	LED Annold (Positive)	40

Note1: Start from right side

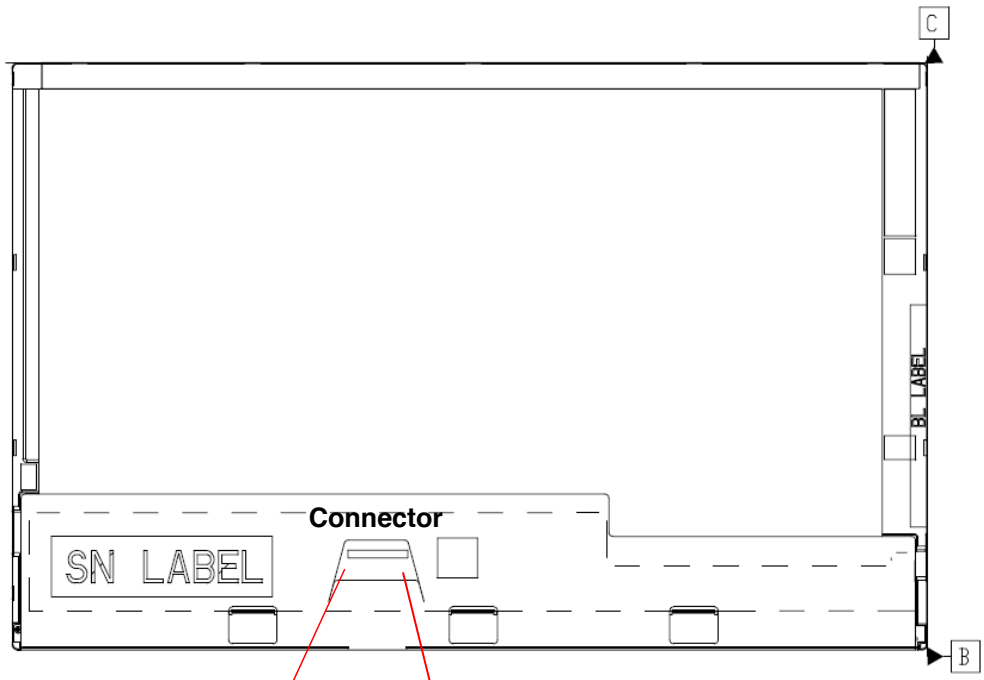

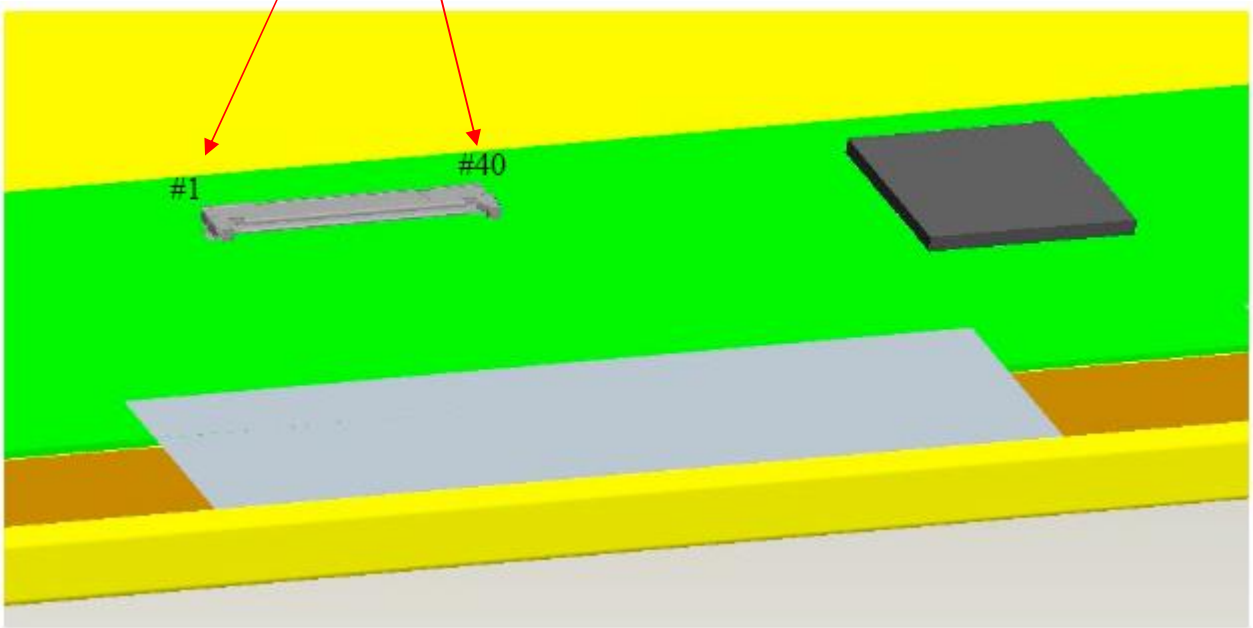

6.4 Interface Timing

6.4.1 Timing Characteristics

Basically, interface timings should match the 1440X900 /60Hz manufacturing guide line timing.

Parameter		Symbol	Min.	Typ.	Max.	Unit
Frame Rate		-	50	60	-	Hz
Clock frequency		1/ T_{Clock}	-	48.2	60.2	MHz
Vertical Section	Period	T_V	904	912	2048	T_{Line}
	Active	T_{VD}	900	900	900	
	Blanking	T_{VB}	4	12	-	
Horizontal Section	Period	T_H	760	880	1024	T_{Clock}
	Active	T_{HD}	720	720	720	
	Blanking	T_{HB}	40	160	-	

Note : DE mode only

6.4.2 Timing diagram

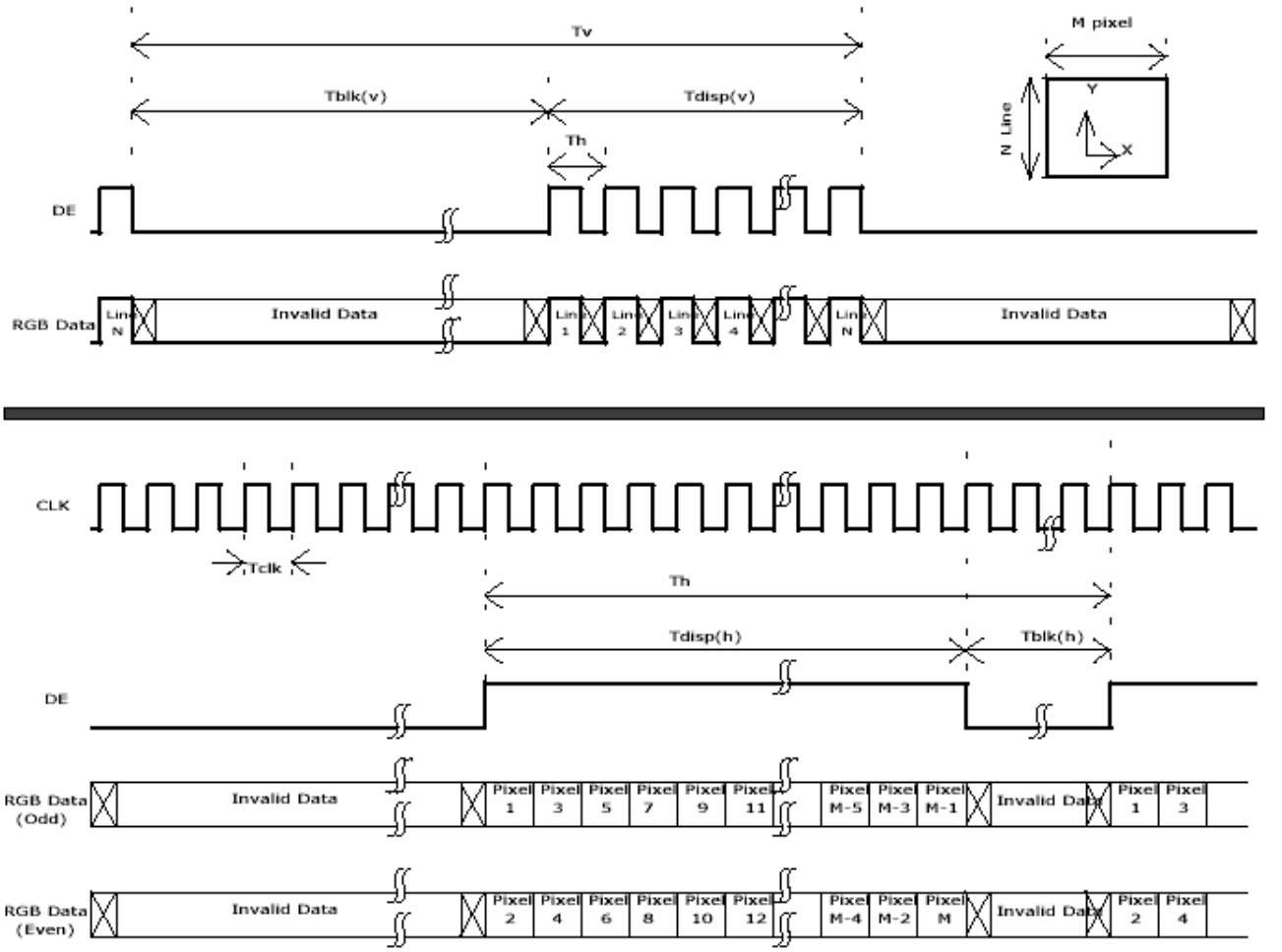

6.5 Power ON/OFF Sequence

VDD power and lamp on/off sequence is as follows. Interface signals are also shown in the chart. Signals from any system shall be Hi-Z state or low level when VDD is off.

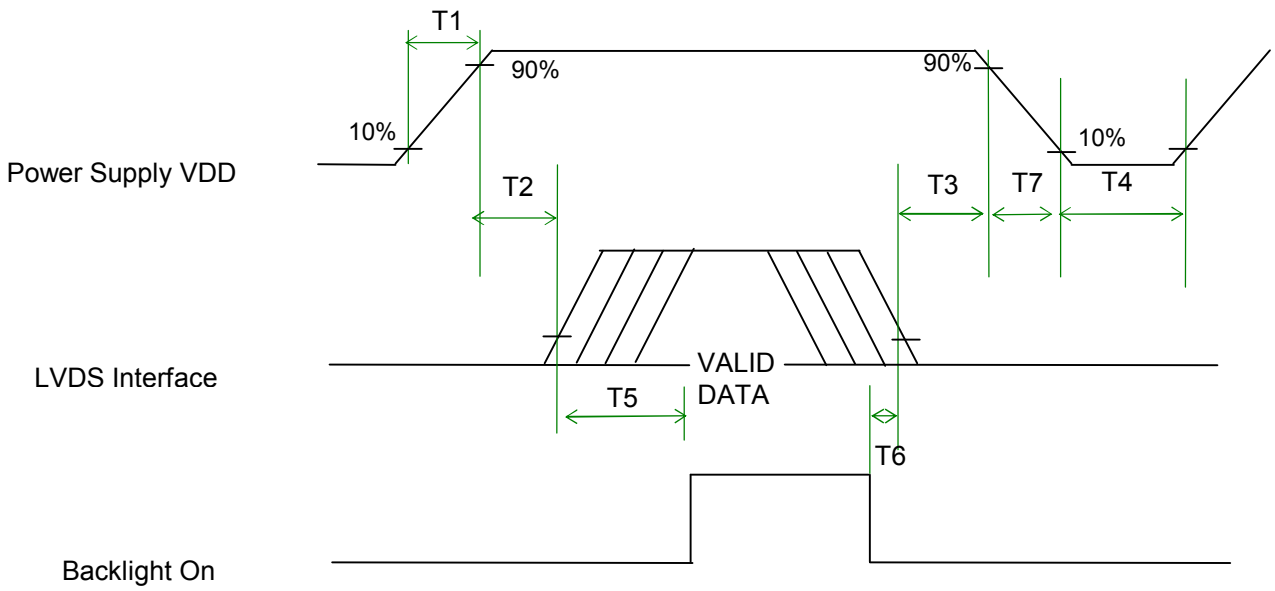

Power Sequence Timing

Parameter	Value			Units
	Min.	Typ.	Max.	
T1	0.5	-	10	(ms)
T2	5	-	50	(ms)
T3	0.5	-	50	(ms)
T4	400	-	-	(ms)
T5	200	-	-	(ms)
T6	200	-	-	(ms)
T7	0	-	10	(ms)

7. Connector Description

Physical interface is described as for the connector on module.

These connectors are capable of accommodating the following signals and will be following components.

7.1 TFT LCD Module

Connector Name / Designation	**For Signal Connector**
Manufacturer	JAE or equivalent
Type / Part Number	JAE FI-JH-40S-HF10 or equivalent
Mating Housing/Part Number	JAE FI-JH-40C series or equivalent (micro-coax type)

8. Vibration and Shock Test (Stand alone)

8.1 Vibration Test

Test Spec:

Test method:	Non-Operation
Acceleration:	1.5G
Frequency:	26 - 500Hz Random
Sweep:	30 Minutes each Axis (X, Y, Z)

8.2 Shock Test Spec:

Test Spec:

Test method:	Non-Operation
Acceleration:	260 G , Half sine wave
Active time:	2 ms
Pulse:	X,Y,Z .one time for each side

9. Reliability

Items	Required Condition	Note
Temperature Humidity Bias	40℃/95%,300Hrs	
High Temperature Operation	50℃/Dry,300Hrs	
Low Temperature Operation	0℃,300Hrs	
On/Off Test	25℃,150hrs(ON/30 sec. OFF/30sec., 10,000 cycles)	
Hot Storage	65℃/20% RH ,300 hours	
Cold Storage	-25℃/50% RH ,300 hours	
Thermal Shock Test	-25℃/30 min ,65℃/30 min 100cycles non-OP	
Shock Test (Non-Operating)	260G, 2ms, Half-sine wave, +/- X, Y,Z direction,1 cycle	
Vibration Test (Non-Operating)	Sinusoidal vibration, 3.0 G zero-to-peak, 10 to 150 Hz, 30 mins in each of three mutually perpendicular axes.	
ESD	Contact : ±8KV/ operation Air : ±15KV / operation	Note 1
Image sticking	10X10 checker pattern, 10 hrs, 25℃. The persisting pattern should be disappeared in 5 minutes	

Note1: According to EN61000-4-2 , ESD class B: Some performance degradation allowed. No data lost

. Self-recoverable. No hardware failures.

10. Mechanical Characteristics

10.1 LCM Outline Dimension

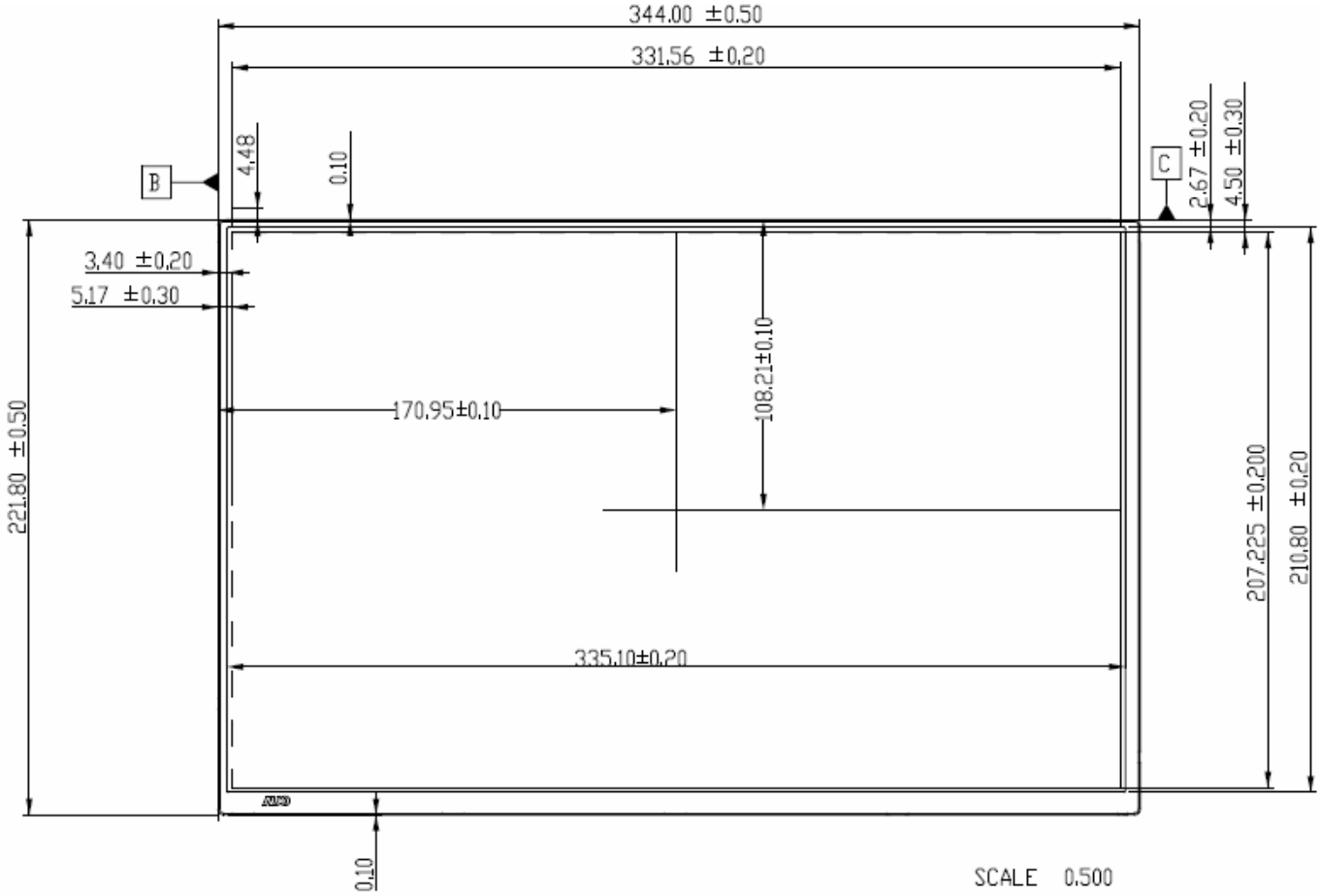

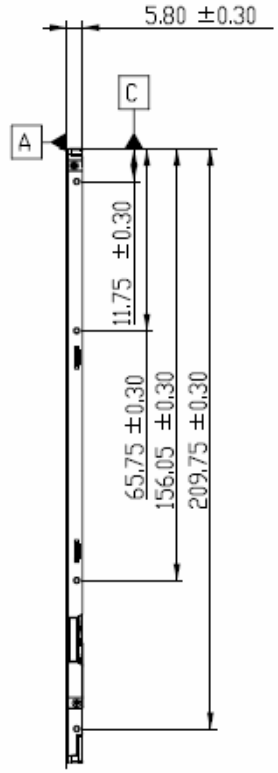

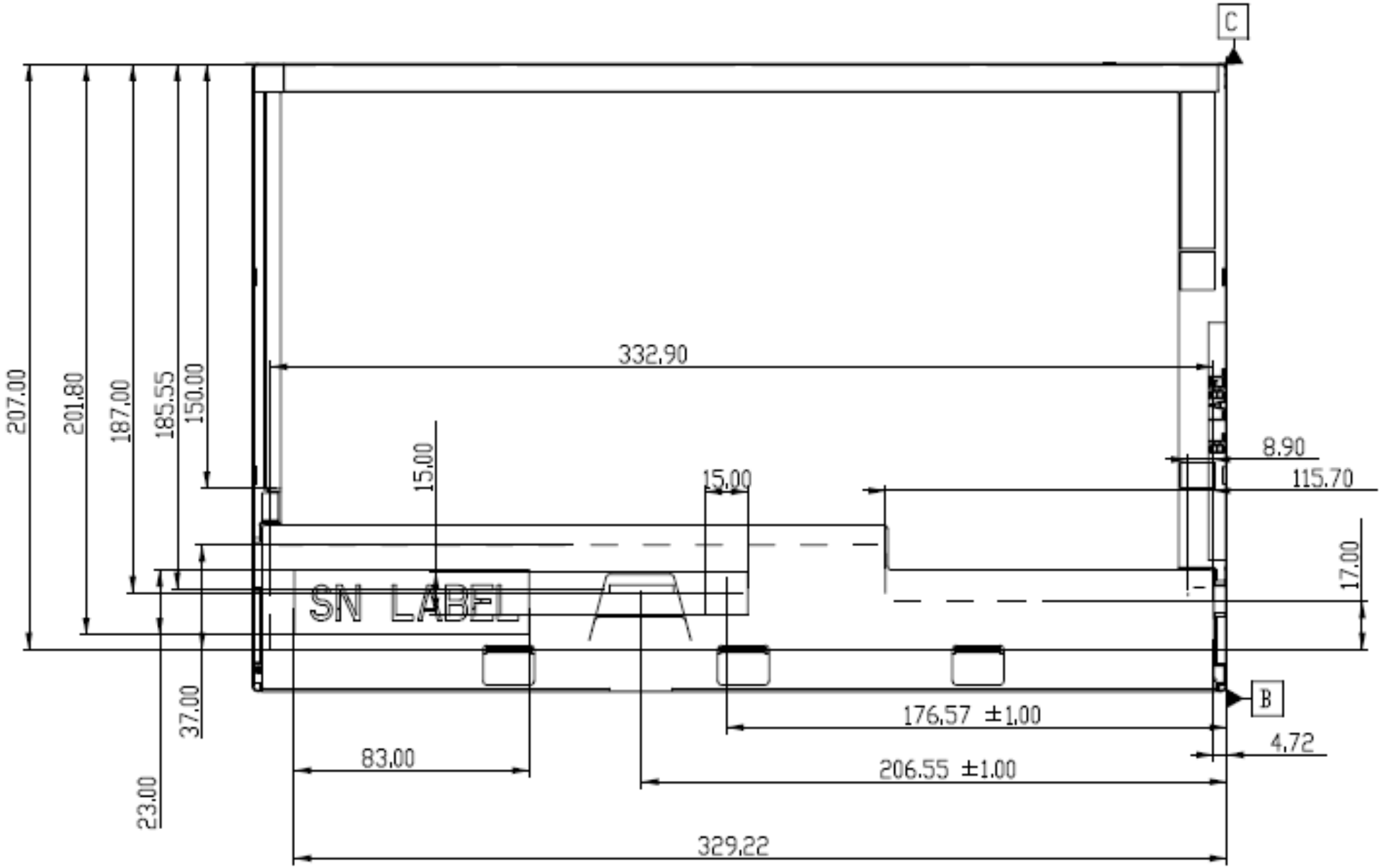
C
B
207.00
201.80
187.00
185.55
150.00
332.90
15.00
15.00
8.90
115.70
17.00
SN LABEL
37.00
23.00
83.00
176.57 ±1.00
206.55 ±1.00
4.72
329.22

11. Shipping and Package

11.1 Shipping Label Format

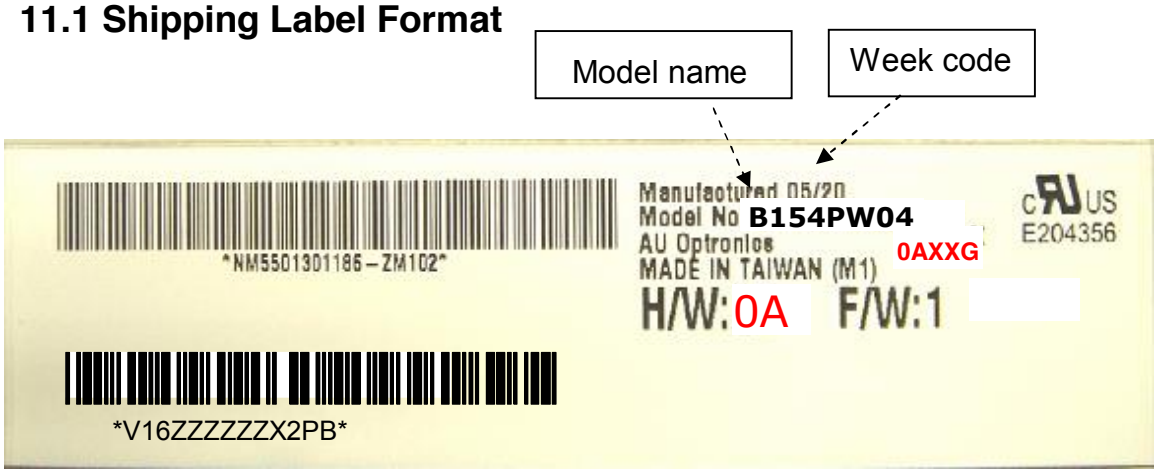

11.2. Carton package

The outside dimension of carton is 455 (L)mm x 380 (W)mm x 355 (H)mm

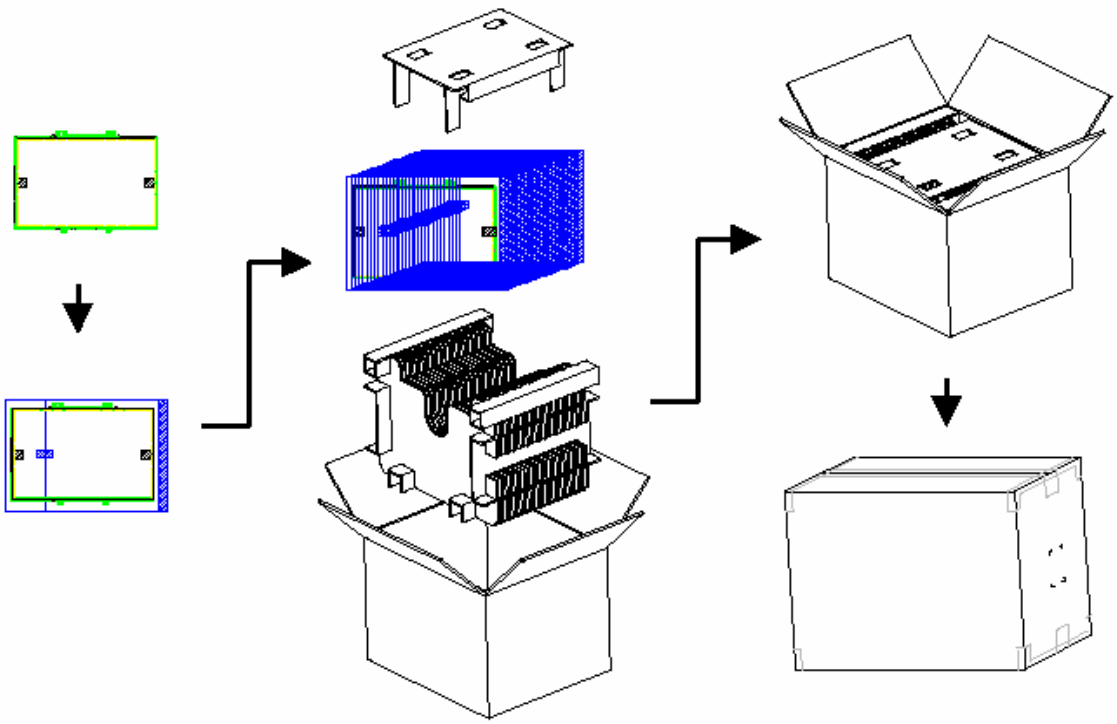

11.3 Shipping package of palletizing sequence

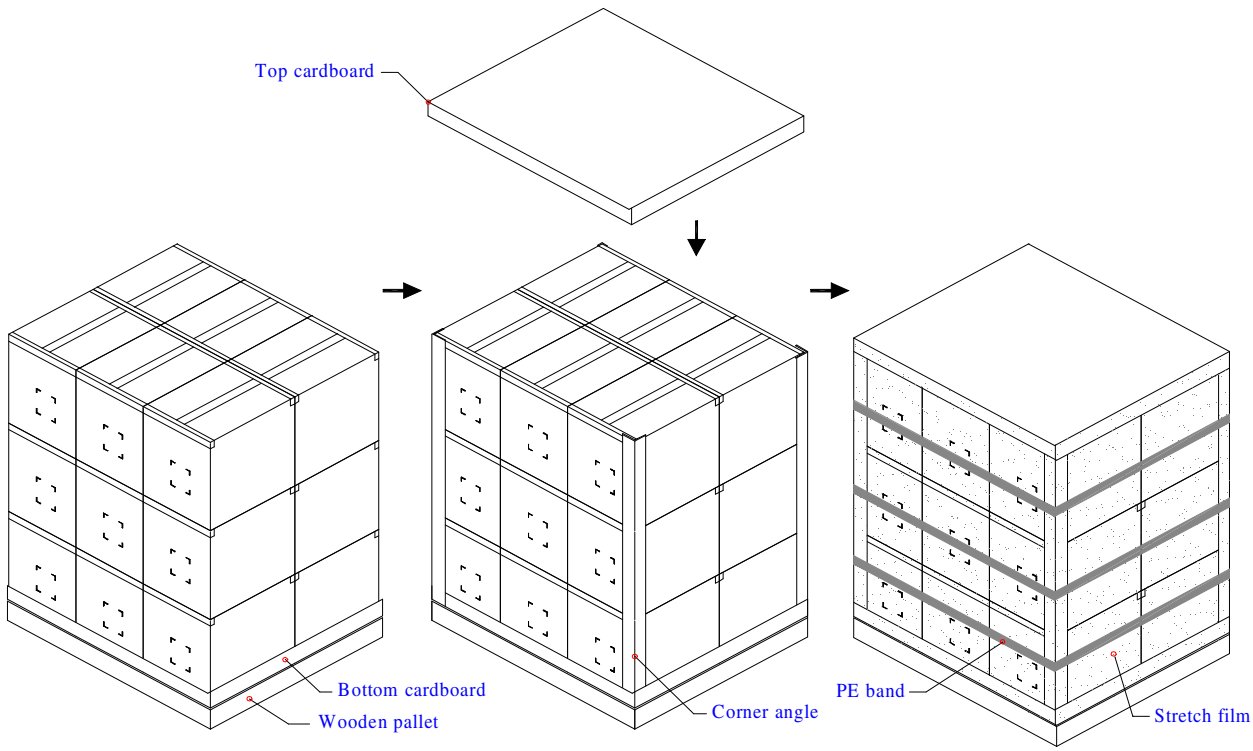

Note : Limit of box palletizing = Max 3 layers(ship and stock conditions)

12. Appendix: EDID description

Address	FUNCTION	B154PW04	Value	Value	Note
HEX	Header	HEX	BIN	DEC	
00		00	00000000	0	
01		FF	11111111	255	
02		FF	11111111	255	
03		FF	11111111	255	
04		FF	11111111	255	
05		FF	11111111	255	
06		FF	11111111	255	
07		00	00000000	0	
08	EISA Manuf. Code LSB	06	00000110	6	APP
09	Compressed ASCII	10	00010000	16	0 00001(A) 10000(P) 10000(P)
0A	Product code	66	01100110	102	9C66
0B	Product code	9C	10011100	156	
0C	32-bit ser #	01	00000001	1	unused
0D		01	00000001	1	
0E		01	00000001	1	
0F		01	00000001	1	
10	Week of manufacture	28	00101000	40	Week=40
11	Year of manufacture	10	00010000	16	Year=2006
12	EDID Structure Ver.	01	00000001	1	
13	EDID revision #	03	00000011	3	
14	Video input definition	80	10000000	128	Digital Input
15	Max H image size	21	00100001	33	33cm
16	Max V image size	15	00010101	21	21cm
17	Display Gamma	78	01111000	120	Gamma=2.2
18	Feature support	0A	00001010	10	no DPMS,Active off,RGB color
19	Red/green low bits	50	01010000	80	
1A	Blue/white low bits	C5	11000101	197	
1B	Red x/ high bits	98	10011000	152	Rx=0.595
1C	Red y	58	01011000	88	Ry=0.345
1D	Green x	52	01010010	82	Gx=0.32
1E	Green y	8E	10001110	142	Gy=0.555
1F	Blue x	27	00100111	39	Bx=0.155
20	Blue y	25	00100101	37	By=0.145
21	White x	50	01010000	80	Wx=0.313
22	White y	54	01010100	84	Wy=0.329
23	Established timing 1	00	00000000	0	unused
24	Established timing 2	00	00000000	0	—
25	Manufacturer's Timing	00	00000000	0	
26	Standard timing #1	01	00000001	1	unused
27		01	00000001	1	
28	Standard timing #2	01	00000001	1	
29		01	00000001	1	
2A	Standard timing #3	01	00000001	1	
2B		01	00000001	1	

2C	Standard timing #4	01	00000001	1	
2D		01	00000001	1	
2E	Standard timing #5	01	00000001	1	
2F		01	00000001	1	
30	Standard timing #6	01	00000001	1	
31		01	00000001	1	
32	Standard timing #7	01	00000001	1	
33		01	00000001	1	
34	Standard timing #8	01	00000001	1	
35		01	00000001	1	
36	Pixel Clock/10,000 (LSB)	9E	10011110	158	Timing Descriptor #1
37	Pixel Clock/10,000 (MSB)	25	00100101	37	Pixel clock=96.3Mhz
38	Horiz. Active pixels(Lower 8 bits)	A0	10100000	160	Horiz active=1440 pixels
39	Horiz.Blanking (Lower 8 bits)	40	01000000	64	Horiz blanking=320 pixels
3A	Horiz. Active pixels:Horiz. Blanking (Upper4:4 bits)	51	01010001	81	
3B		84	10000100	132	Vertcal active=900 lines
3C		0C	00001100	12	Vertical blanking=12 lines
3D	Vert. Active pixels:Vert. Blanking (Upper4:4 bits)	30	00110000	48	
3E		40	01000000	64	Horiz sync. Offset= 64 pixels
3F		20	00100000	32	Horiz sync. Pulse Width= 32 pixels
40	Vert. Sync. Offset=xx lines, Sync Width=xx lines	33	00110011	51	Verti sync. Offset= 3 lines, Sync Width=3 lines
41	Horz. Ver. Sync/Width (upper 2 bits)	00	00000000	0	
42	Hori. Image size (Lower 8 bits)	4C	01001100	76	Hori image size= 332 mm
43	Vert. Image size (Lower 8 bits)	CF	11001111	207	Verti image size= 207 mm
44	Hori. Image size : Vert. Image size (Upper 4 bits)	10	00010000	16	
45		00	00000000	0	Horizontal Border = 0
46		00	00000000	0	Vertical Border = 0
47		18	00011000	24	
48	Detailed timing/monitor	00	00000000	0	
49	descriptor #2	00	00000000	0	
4A		00	00000000	0	
4B		01	00000001	1	Customer reserved
4C	Version	00	00000000	0	Customer reserved
4D	edid signature	06	00000110	6	Customer reserved
4E	edid signature	10	00010000	16	Customer reserved
4F	Link Type (LVDS Link,MSB justified)	30	00110000	48	Customer reserved
50	Pixel and link component format (6-bit panel interface)	00	00000000	0	Customer reserved
51	Panel features (No inverter)	00	00000000	0	Customer reserved
52		00	00000000	0	
53		00	00000000	0	
54		00	00000000	0	
55		00	00000000	0	
56		00	00000000	0	
57		00	00000000	0	
58		0A	00001010	10	

59		20	00100000	32	
5A	**Detailed timing/monitor**	00	00000000	0	**ASCII Data String: B154PW04 V0**
5B	**descriptor #3**	00	00000000	0	
5C		00	00000000	0	
5D		FE	11111110	254	
5E		00	00000000	0	
5F		42	01000010	66	**B**
60		31	00110001	49	**1**
61		35	00110101	53	**5**
62		34	00110100	52	**4**
63		50	01010000	80	**P**
64		57	01010111	87	**W**
65		30	00110000	48	**0**
66		34	00110100	52	**4**
67		20	00100000	32	
68		56	01010110	86	**V**
69		30	00110000	48	**0**
6A		0A	00001010	10	
6B		20	00100000	32	
6C	**Detailed timing/monitor**	00	00000000	0	**Monitor Name: Color LCD**
6D	**descriptor #4**	00	00000000	0	
6E		00	00000000	0	
6F		FE	11111110	254	
70		00	00000000	0	
71		43	01000011	67	**C**
72		6F	01101111	111	**o**
73		6C	01101100	108	**l**
74		6F	01101111	111	**o**
75		72	01110010	114	**r**
76		20	00100000	32	
77		4C	01001100	76	**L**
78		43	01000011	67	**C**
79		44	01000100	68	**D**
7A		0A	00001010	10	
7B		20	00100000	32	
7C		20	00100000	32	
7D		20	00100000	32	
7E	**Extension Flag**	00	00000000	0	
7F	**Checksum**	87	10000111	135	
	Checksum		SUM	6656	
			SUM to HEX	1A00	
			Check	00	