■ **Preliminary Specification**
□ **Final Specification**

Module	**5.0 Inch Color TFT-LCD**
Model Name	**G050VVN01.0**

Customer	**Date**	**Approved by**	**Date**
		Grace Hung	2013/5/15
Checked & Approved by	**Date**	**Prepared by**	**Date**
		Mask Tsai	2013/5/15
Note: This Specification is subject to change without notice.		General Display Business Division / AU Optronics corporation	

□ **APPROVAL FOR SPECIFICATIONS ONLY (Spec. Ver. 0.0)**
□ **APPROVAL FOR SPECIFICATIONS AND ES SAMPLE (Spec. Ver. 0.0)**
□ **APPROVAL FOR SPECIFICATIONS AND CS SAMPLE (Spec. Ver. 0.0)**
□ **CUSTOMER REMARK :**

Contents

Record of Revision

Version	Revise Date	Page	Old description
0.0	2013/4/19	-	First draft of preliminary specification.
0.1	2013/4/25	14,15	Modify 6.3 TFT- LCD Pin Assignment Description
0.2	2013/5/15	26	Modify FPC drawing of 8. Mechanical Characteristics

1. Operating Precautions

1) Display area (Polarizer) of TFT-LCD Module is easily to be damaged, please be cautious and not to scratch it.
2) Be sure to power off your machine before connecting or disconnecting your signal cable to TFT-LCD Module.
3) Wipe off water drop on display area immediately. Long contact with water may cause discoloration or spots.
4) When the panel surface is soiled, wipe it with absorbent cotton or soft cloth.
5) Display area (Glass) of TFT-LCD Module may be broken or cracked if bump Module against hard object.
6) To avoid ESD (Electro Static Discharde) damage, be sure to ground yourself before handling TFT-LCD Module.
7) Do not open nor modify the TFT-LCD module assembly.
8) Do not press the reflector sheet at the back of the module to any direction.
9) In case if TFT-LCD module has to be put back into the packing container slot after it was taken out from the container, do not press the center of the LED Reflector edge. Instead, press at the far ends of the LED Reflector edge softly. Otherwise the TFT-LCD Module may be damaged.
10) When inserting or removing of your signal cable to TFT-LCD Module, be sure not to apply abnormal force (rotate, tilt…etc.) to the Connector of the TFT-LCD Module.
11) TFT-LCD Module is not allowed to be twisted & bent even force is added on module in a very short time. Please design your display product well to avoid external force applying to module by end-user directly.
12) Small amount of materials without flammability grade are used in the TFT-LCD module. The TFT-LCD module should be supplied by power complied with requirements of Limited Power Source (IEC60950 or UL1950), or be applied exemption.
13) Severe temperature condition may result in different luminance, response time.
14) Continuous operating TFT-LCD Module under high temperature environment may accelerate LED light bar exhaustion and reduce luminance dramatically.
15) The data on this specification sheet is applicable when TFT-LCD module is placed in landscape position.
16) Continuous displaying fixed pattern may induce image sticking. It’s recommended to use screen saver or moving content periodically if fixed pattern is displayed on the screen.

2. General Description

This specification applies to the 5.0 inch color TFT LCD with MVA technology module G050VVN01.0. It composed of a TFT-LCD panel, driver ICs, FPC with power supply circuit and backlight unit.

The screen format is intended to support the WVGA (480(H) x 8000(V)) screen and 16.7M (8-bits) by digital parallel RGB interface.

2.1 Features

- 5.0 inch (15:9) display
- WVGA (480(H) × 800(V)) resolution
- Digital parallel RGB 8bit interface
- High brightness
- High Contrast ratio
- Wide viewing angle with MVA technology
- RoHs compliance

2.2 Display Characteristics

The following items are G050VVN01.0 characteristics summary at 25 ℃(Room Temperature).

Items		Unit	Specifications
Screen Diagonal		inch	5.0
Outline Dimension		mm	71.2(H)X119.5(V)X2.61(T)
Active Area Size		mm	64.8(H)×108.0(V)
Resolution		dots	480RGB(H)×800(V)
Pixel Pitch		mm	0.135(H)×0.135(V)
Pixel Arrangement		—	R.G.B. Vertical Stripe
Display Mode		—	MVA, Normally Black
Color Depth		—	16.7M (8bit)
Nominal Input Power	LCD VCI / VDDI	V	3 (typ.)
	Backlight	mA	40
Typical Power Consumption		mW	TBD
Typical Weight		g	48.0±5
Surface Treatment		—	Anti-Glare, Hardness 3H
Temperature Range	Operating	°C	0 to +70
	Storage(Non-Operating)	°C	-10 to +80

2.3 Optical Characteristics

The optical characteristics are measured under stable conditions at 25℃ (Room Temperature).

Item	Conditions		Min.	Typ.	Max.	Unit	Remark
White Luminance	Θx = 0°; Θy = 0°		360	450	—	cd/m2	Note 1
Contrast Ratio			TBD	700	—		Note 1, 2
Response Time	Θx = 0° Θy = 0°	Rising (Tr)	—	20	TBD	ms	Note 1, 3
		Falling (Tf)	—	15	TBD		
		Tr + Tf	—	35	TBD		
Viewing Angle	Horizontal CR ≧ 10	Right	60	80	—	degree	Note 1, 4
		Left	60	80	—		
	Vertical CR ≧ 10	Top	60	80	—		
		Bottom	60	80	—		
Color / Chromaticity Coordinates (CIE 1931)	White x		TBD	TBD	TBD		Note 1
	White y		TBD	TBD	TBD		
	Red x		TBD	TBD	TBD		
	Red y		TBD	TBD	TBD		
	Green x		TBD	TBD	TBD		
	Green y		TBD	TBD	TBD		
	Blue x		TBD	TBD	TBD		
	Blue y		TBD	TBD	TBD		
Color Gamut			—	50	—	%	Note 1
Uniformity	9 Points		70	80	—	%	Note 1, 5

Note 1：Measurement method and condition

Equipment	Pattern Generator, Power Supply, Digital Voltmeter, Topcon luminance meter BM-5A
Test Point	Aperture = 1° with 50cm viewing distance at center of active area
Condition	1. Performed in the dark and windless room (Ambient light < 1 lux) 2. Measured after 15 minutes operation under backlight current I_{BL} = 40mA.

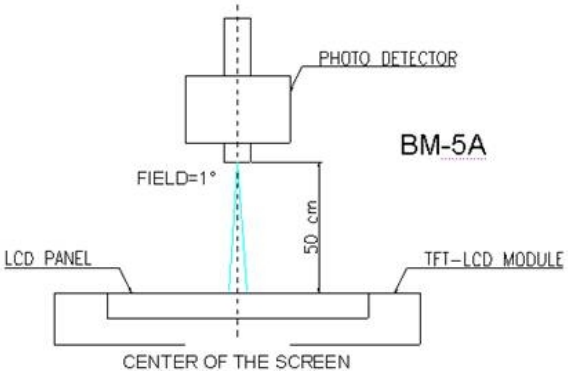

Fig. 2-1

Note 2：Definition of contrast ratio (CR)

$$\text{Contrast ratio (CR)} = \frac{\text{Brightness @ “White” state}}{\text{Brightness @ “Black” state}}$$

Note 3：Definition of response time

The output signals of photo detector are measured when the input signals are changed from “White” to “Black” (falling time) and from “Black” to “White” (rising time), respectively. The response time interval definition is between 10% and 90% of amplitude. Please refer to the figure as below.

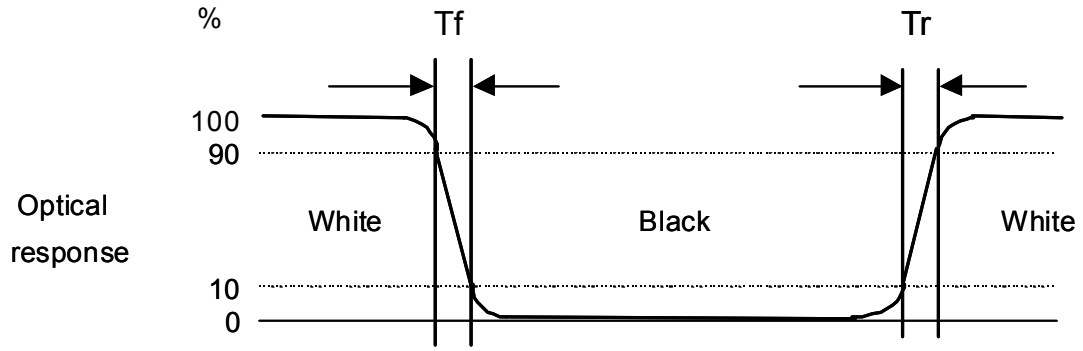

Fig. 2-2

Note 4：Definition of viewing angle

Viewing angle is the measurement of contrast ratio ≧10, at the screen center, over 180° horizontal and 180° vertical range. The 180° horizontal (θL, θR) and 180° vertical (ΦH, ΦL) range are illustrated as following figure.

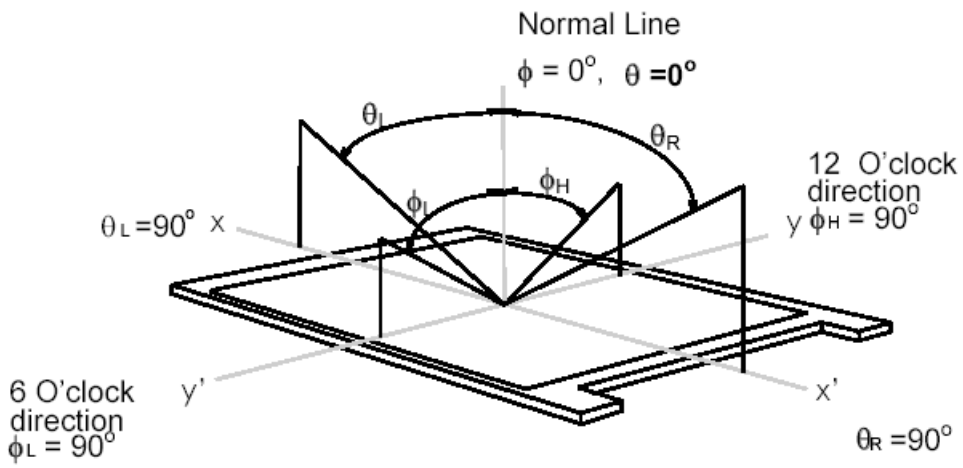

Fig. 2-3

Note 5：Definition of 9 points position on Active Area

The luminance uniformity of 9 points is defined by dividing the maximum luminance value by the minimum luminance value at full white condition.

$$\text{Luminance Uniformity (\%)} = \frac{\text{Maximum Brightness of nine points}}{\text{Minimum Brightness of nine points}}$$

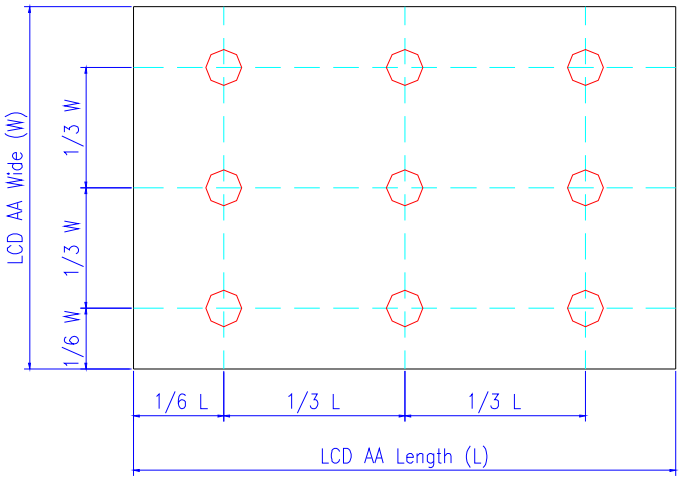

Fig.2-4

3. Functional Block Diagram

The following diagram shows the functional block of the G050VVN01.0 color TFT/LCD module.

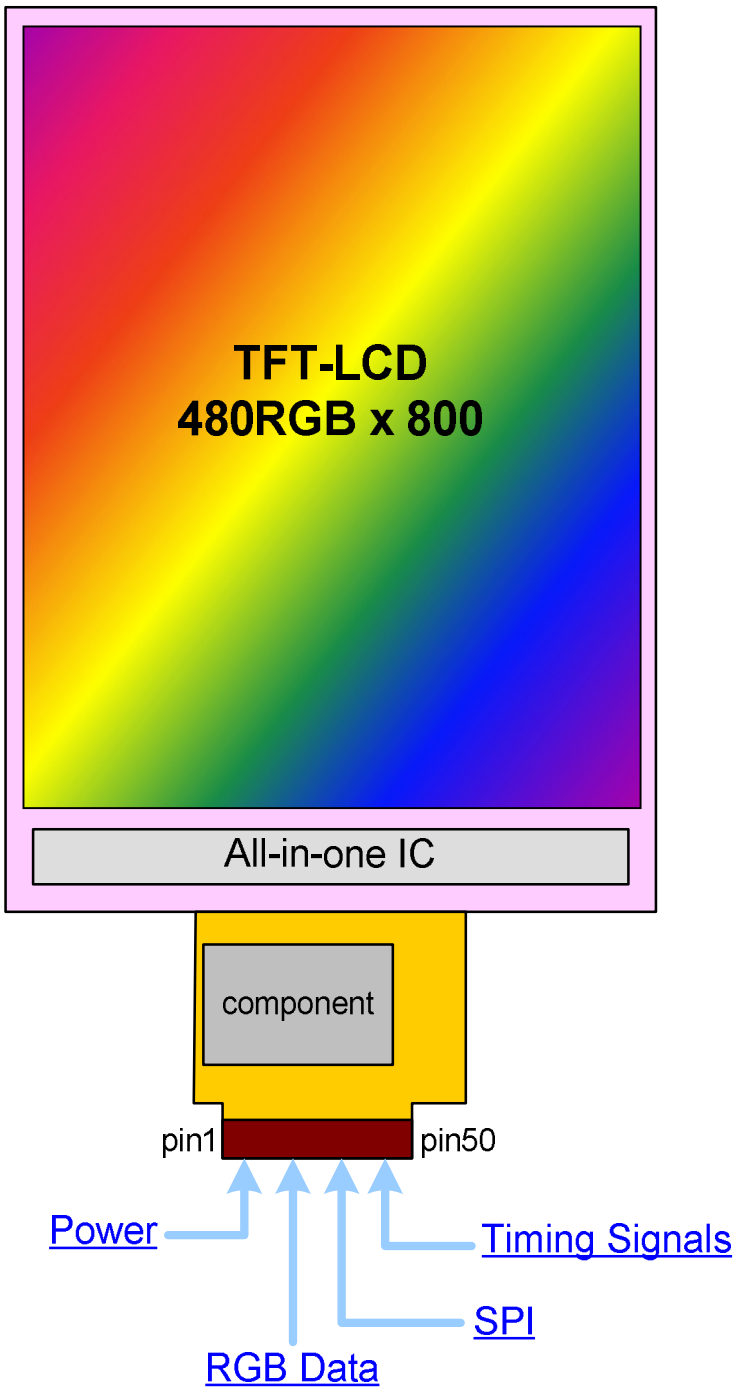

Fig. 3-1

4. Absolute Maximum Ratings

4.1 Absolute Ratings of Driving Condition

Following characteristics are measured under stable condition at 25℃ (Room Temperature).

Parameter	Symbol	Min	Max	Unit	Remark
Supply Voltage	VCI	-0.3	+5.5	V	
Supply Voltage	VDDI	-0.3	+5.5	V	
LED BLU Driving Current	I_{BL}	0	70	mA	

4.2 Absolute Ratings of Environment

Parameter	Symbol	Min	Max	Unit	Remark
Operating Temperature	TOP	TBD	TBD	℃	Note 1, 2
Operation Humidity	HOP	TBD	TBD	%RH	Note 1, 2
Storage Temperature	TST	TBD	TBD	℃	Note 1
Storage Humidity	HST	TBD	TBD	%RH	Note 1

Note 1：Maximum Wet-Bulb should be 39℃ and no condensation.

Note 2：Only operation is guaranteed. Optical performance should be evaluated at 25℃ only.

5. Electrical Characteristics

5.1 TFT-LCD Driving Condition

Following characteristics are measured under stable condition at 25℃ (Room Temperature).

Parameter	Symbol	Min	Typ	Max	Units	Remark
Analog operating voltage	VCI	2.7	3.0	3.3	V	
Logic operating voltage	VDDI	1.8	3.0	3.3	V	
Logic high level input voltage	VIH	0.7 VDDI	-	VDDI	V	
Logic low level input voltage	VIL	0	-	0.3 VDDI	V	

Mode	Symbol	Condition	Min.	Typ.	Max.	Unit	Remark
Normal	P_N	VCI = 3.0V VDDI = 3.0V	-	TBD	TBD	mW	Note 1,2
Sleep	P_S		-	TBD	TBD	mW	

Note 1: Test Condition is under typical Electrical DC and AC characteristics.

Note 2: Test pattern is the following picture (color bar).

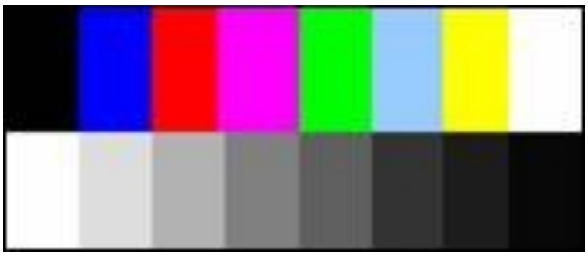

5.2 Backlight Unit Driving Condition

Following characteristics are measured under stable condition at 25℃ (Room Temperature).

Parameter	Symbol	Min	Typ	Max	Units	Remark
Input Voltage	V_{BL}	—	18	19.8	V	
Input Current	I_{BL}	—	40	—	mA	
Power Consumption	P_{BL}	—	720	792	W	
LED Lifetime	LED_L	10000	—	—	Hrs	

Note 1： Backlight unit composed of 12 LEDs. (2 stings, 6 pcs for each string)

Note 2： The definition of LED lifetime is when B/L continues to operate under typical driving current, duty 100% and ambient temperature = 25℃ until the brightness becomes ≦ 50% of its original value.

Note 3： Operating LED under high temperature, humidity environment and driving current will reduce lifetime and lead to color shift.

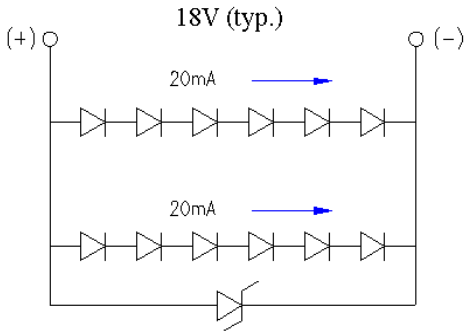

Fig. 5-1

6. Signal Characteristic

6.1 Pixel Format Image

Following figure shows the relationship between input signal and LCD pixel format.

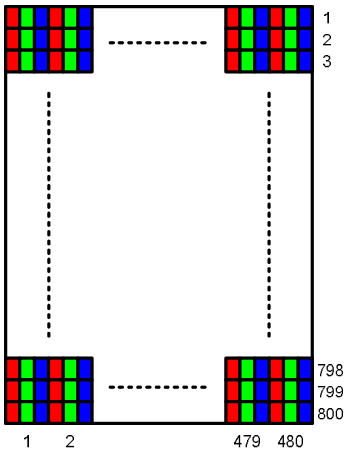

Fig 6-1

6.2 The Input Data Format

This product displays 16.7M colors in terms of the 256 grey levels on RGB respectively.

Display colors		Data signal (0 : Low level, 1: High level)																							
		R7	R6	R5	R4	R3	R2	R1	R0	G7	G6	G5	G4	G3	G2	G1	G0	B7	B6	B5	B4	B3	B2	B1	B0
Basic colors	Black	0	0	0	0	0	0	0	0	0	0	0	0	0	0	0	0	0	0	0	0	0	0	0	0
	Blue	0	0	0	0	0	0	0	0	0	0	0	0	0	0	0	0	1	1	1	1	1	1	1	1
	Red	1	1	1	1	1	1	1	1	0	0	0	0	0	0	0	0	0	0	0	0	0	0	0	0
	Magenta	1	1	1	1	1	1	1	1	0	0	0	0	0	0	0	0	1	1	1	1	1	1	1	1
	Green	0	0	0	0	0	0	0	0	1	1	1	1	1	1	1	1	0	0	0	0	0	0	0	0
	Cyan	0	0	0	0	0	0	0	0	1	1	1	1	1	1	1	1	1	1	1	1	1	1	1	1
	Yellow	1	1	1	1	1	1	1	1	1	1	1	1	1	1	1	1	0	0	0	0	0	0	0	0
	White	1	1	1	1	1	1	1	1	1	1	1	1	1	1	1	1	1	1	1	1	1	1	1	1
Red grayscale	Black	0	0	0	0	0	0	0	0	0	0	0	0	0	0	0	0	0	0	0	0	0	0	0	0
		0	0	0	0	0	0	0	1	0	0	0	0	0	0	0	0	0	0	0	0	0	0	0	0
	Dark	0	0	0	0	0	0	1	0	0	0	0	0	0	0	0	0	0	0	0	0	0	0	0	0
	↑ ↓ bright																								
		1	1	1	1	1	1	0	1	0	0	0	0	0	0	0	0	0	0	0	0	0	0	0	0
		1	1	1	1	1	1	1	0	0	0	0	0	0	0	0	0	0	0	0	0	0	0	0	0
	Red	1	1	1	1	1	1	1	1	0	0	0	0	0	0	0	0	0	0	0	0	0	0	0	0
Green grayscale	Black	0	0	0	0	0	0	0	0	0	0	0	0	0	0	0	0	0	0	0	0	0	0	0	0
		0	0	0	0	0	0	0	0	0	0	0	0	0	0	0	1	0	0	0	0	0	0	0	0
	Dark	0	0	0	0	0	0	0	0	0	0	0	0	0	0	1	0	0	0	0	0	0	0	0	0
	↑ ↓ bright																								
		0	0	0	0	0	0	0	0	1	1	1	1	1	1	0	1	0	0	0	0	0	0	0	0
		0	0	0	0	0	0	0	0	1	1	1	1	1	1	1	0	0	0	0	0	0	0	0	0
	Green	0	0	0	0	0	0	0	0	1	1	1	1	1	1	1	1	0	0	0	0	0	0	0	0
Blue grayscale	Black	0	0	0	0	0	0	0	0	0	0	0	0	0	0	0	0	0	0	0	0	0	0	0	0
		0	0	0	0	0	0	0	0	0	0	0	0	0	0	0	0	0	0	0	0	0	0	0	1
	Dark	0	0	0	0	0	0	0	0	0	0	0	0	0	0	0	0	0	0	0	0	0	0	1	0
	↑ ↓ bright																								
		0	0	0	0	0	0	0	0	0	0	0	0	0	0	0	0	1	1	1	1	1	1	0	1
		0	0	0	0	0	0	0	0	0	0	0	0	0	0	0	0	1	1	1	1	1	1	1	0
	Blue	0	0	0	0	0	0	0	0	0	0	0	0	0	0	0	0	1	1	1	1	1	1	1	1

6.3 TFT- LCD Pin Assignment Description

Recommended connector: 50FHY-RSM1-GAN-TF (JST)

Pin no	Symbol	I/O	Description	Remark
1	VCI	P	Power supply for analog circuit	
2	VDDI	P	Power supply for digital interface	
3	GND	G	Ground	
4	GND	G	Ground	
5	VS	I	Vertical sync input	
6	GND	G	Ground	
7	HS	I	Horizontal sync input	
8	GND	G	Ground	
9	PCLK	I	Data clock Input	
10	GND	G	Ground	
11	DE	I	Data enable input. Active level is high.	If not used, please connect it to GND.
12	GND	G	Ground	
13	DB0	I	Blue Data input; LSB	
14	DB1	I	Blue Data input	
15	DB2	I	Blue Data input	
16	DB3	I	Blue Data input	
17	DB4	I	Blue Data input	
18	DB5	I	Blue Data input	
19	DB6	I	Blue Data input	
20	DB7	G	Blue Data input; MSB	
21	GND	G	Ground	
22	DG0	I	Green Data input; LSB	
23	DG1	I	Green Data input	
24	DG2	I	Green Data input	
25	DG3	I	Green Data input	
26	DG4	I	Green Data input	
27	DG5	I	Green Data input	
28	DG6	I	Green Data input	
29	DG7	G	Green Data input ; MSB	
30	GND	G	Ground	
31	DR0	I	Red Data input; LSB	
32	DR1	I	Red Data input	
33	DR2	I	Red Data input	
34	DR3	I	Red Data input	

35	DR4	I	Red Data input	
36	DR5	I	Red Data input	
37	DR6	I	Red Data input	
38	DR7	I	Red Data input; MSB	
39	GND	G	Ground	
40	GND	G	Ground	
41	VDDI	P	Power supply for digital interface	
42	VCI	P	Power supply for analog circuit	
43	RESX	I	Reset pin. (Low active)	
44	GND	G	Ground	
45	CSX	I	Chip select (Low active) of SPI	
46	SCL	I	Clock input of SPI	
47	SDI	I	Data input of SPI	
48	GND	G	Ground	
49	LED-	P	LED backlight cathode	
50	LED+	P	LED backlight anode	

Note 1： I: Digital signal input pin; P: Power pin; G: Ground pin;

6.4 Electrical AC Characteristics

a. SPI Interface Characteristics

(a) Signal AC Characteristics

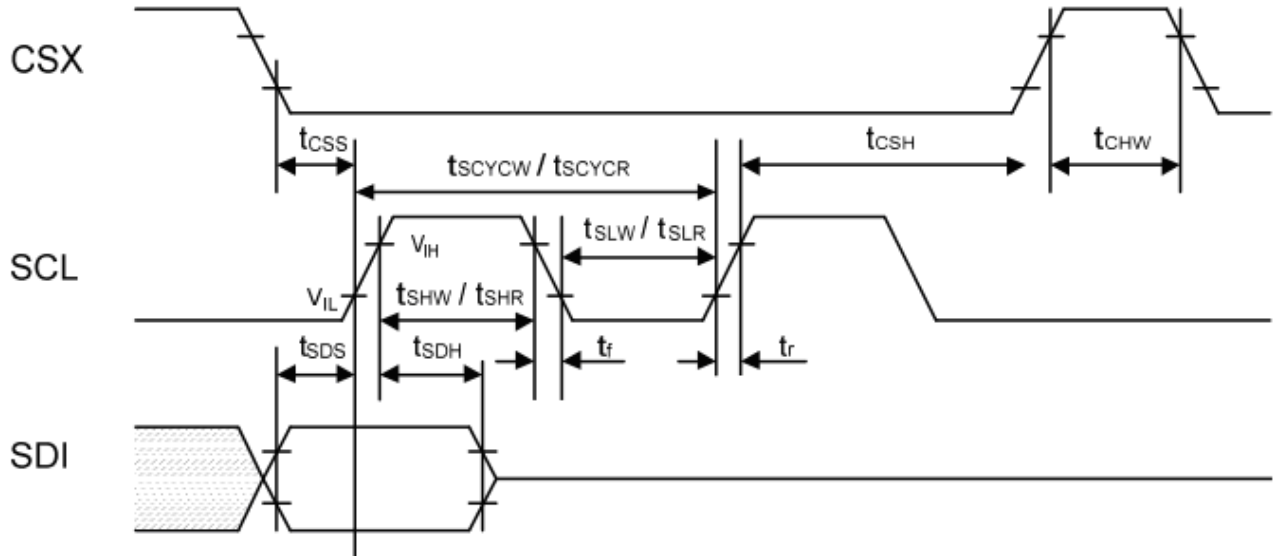

VDDI=1.65~3.3V, VCI=2.6~3.3V, TA=25℃

Signal	Symbol	Parameter	Min.	Max.	Unit	Description
SCL	t_{SCYCW}	Serial clock cycle (Write)	100	-	ns	
	t_{SHW}	SCL “H” pulse width (Write)	40	-	ns	
	t_{SLW}	SCL “L” pulse width (Write)	40	-	ns	
	t_{SCYCR}	Serial clock cycle (Read GRAM)	300	-	ns	
	t_{SHR}	SCL “H” pulse width (Read GRAM)	140	-	ns	
	t_{SLR}	SCL “L” pulse width (Read GRAM)	140	-	ns	
	t_{SCYCR}	Serial clock cycle (Read ID)	300	-	ns	
	t_{SHR}	SCL “H” pulse width (Read ID)	140	-	ns	
	t_{SLR}	SCL “L” pulse width (Read ID)	140	-	ns	
SDI	t_{SDS}	DE setup time	20	-	ns	
	t_{SDH}	DE hold time	20	-	ns	
CSX	t_{CHW}	Chip select “H” pulse width	45	-	ns	
	t_{CSS}	Chip select setup time	20	-	ns	
	t_{CSH}	Chip select hold time	50	-	ns	

(b) Write Mode

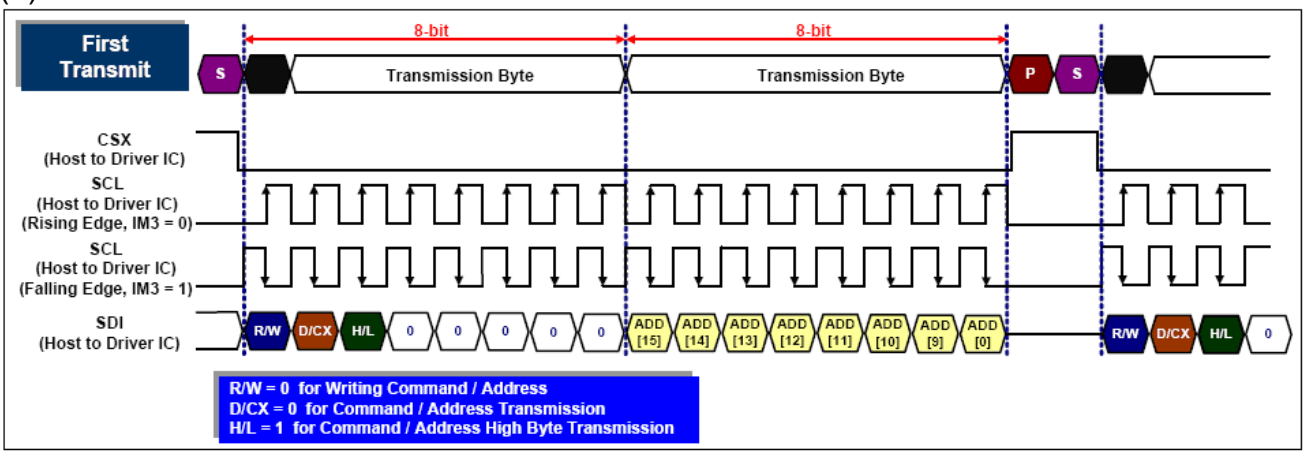
First Transmit
8-bit
8-bit
S
Transmission Byte
Transmission Byte
P
S
CSX (Host to Driver IC)
SCL (Host to Driver IC) (Rising Edge, IM3 = 0)
SCL (Host to Driver IC) (Falling Edge, IM3 = 1)
SDI (Host to Driver IC)
R/W D/CX H/L 0 0 0 0 0
ADD [15] ADD [14] ADD [13] ADD [12] ADD [11] ADD [10] ADD [9] ADD [0]
R/W D/CX H/L 0
R/W = 0 for Writing Command / Address
D/CX = 0 for Command / Address Transmission
H/L = 1 for Command / Address High Byte Transmission

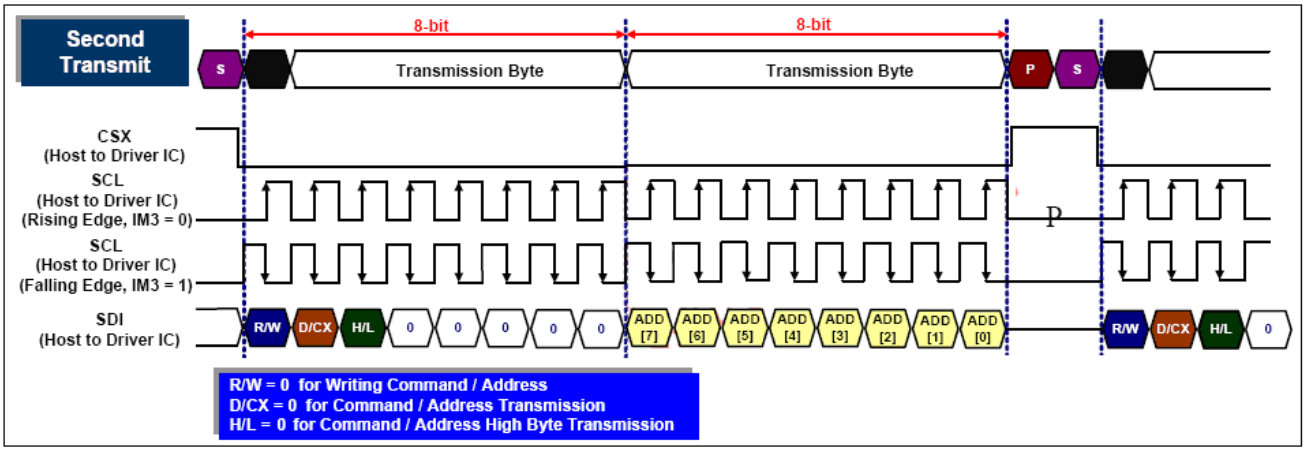
Second Transmit
8-bit
8-bit
S
Transmission Byte
Transmission Byte
P
S
CSX (Host to Driver IC)
SCL (Host to Driver IC) (Rising Edge, IM3 = 0)
SCL (Host to Driver IC) (Falling Edge, IM3 = 1)
SDI (Host to Driver IC)
R/W D/CX H/L 0 0 0 0 0
ADD [7] ADD [6] ADD [5] ADD [4] ADD [3] ADD [2] ADD [1] ADD [0]
R/W D/CX H/L 0
R/W = 0 for Writing Command / Address
D/CX = 0 for Command / Address Transmission
H/L = 0 for Command / Address High Byte Transmission

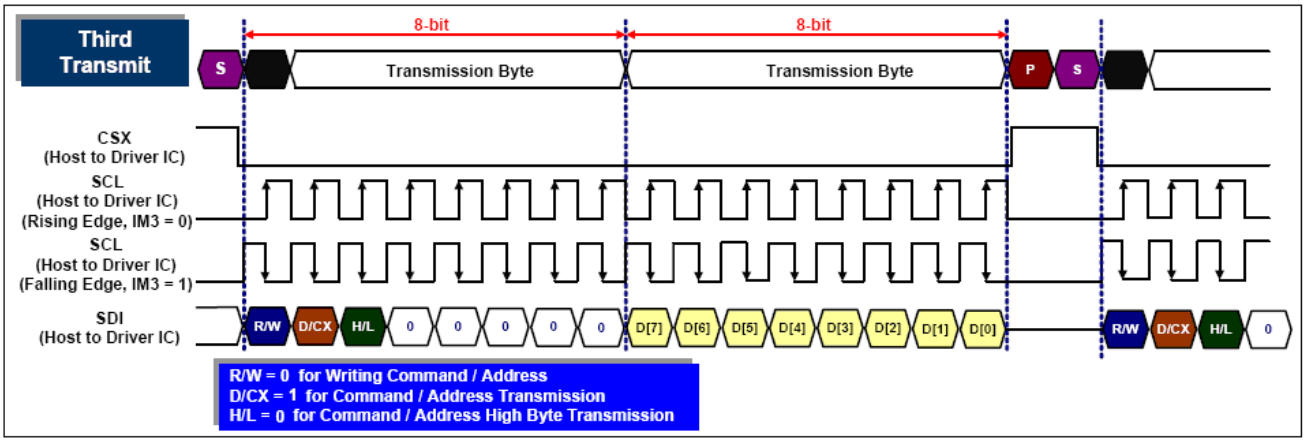
Third Transmit
8-bit
8-bit
S
Transmission Byte
Transmission Byte
P
S
CSX (Host to Driver IC)
SCL (Host to Driver IC) (Rising Edge, IM3 = 0)
SCL (Host to Driver IC) (Falling Edge, IM3 = 1)
SDI (Host to Driver IC)
R/W D/CX H/L 0 0 0 0 0
D[7] D[6] D[5] D[4] D[3] D[2] D[1] D[0]
R/W D/CX H/L 0
R/W = 0 for Writing Command / Address
D/CX = 1 for Command / Address Transmission
H/L = 0 for Command / Address High Byte Transmission

b. RGB Interface Characteristics

(a) Signal AC Characteristics

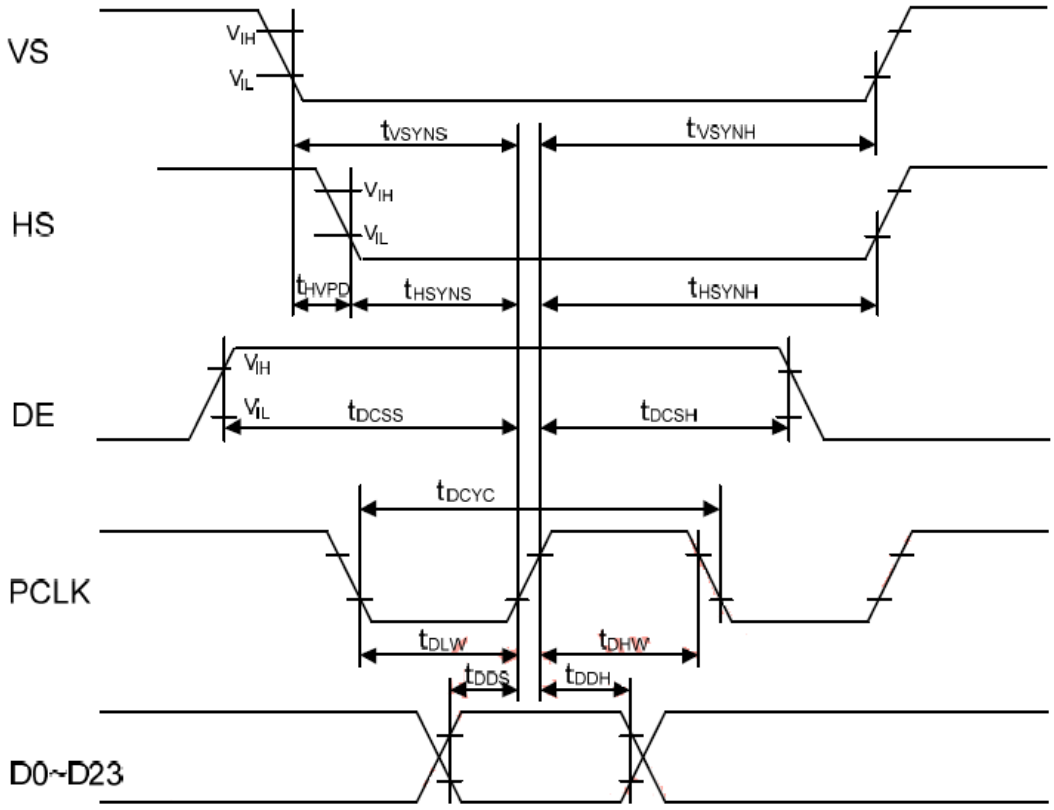

VDDI=1.65~3.3V, VCI=2.6~3.3V, TA=25℃

Signal	Symbol	Parameter	Min.	Max.	Unit	Description
VS	t_{VSYNS}	VSYNC setup time	10		ns	
	t_{VSYNH}	VSYNC hold time	10		ns	
HS	t_{HSYNS}	HSYNC setup time	10		ns	
	t_{SCYCR}	HSYNC hold time	10		ns	
	t_{HVPD}	HSYNC to VSYNC falling edge	400		ns	
PCLK	t_{DCYC}	PCLK cycle time	36.5	46.1	ns	
	t_{DFREQ}	PCLK frequency	21.7	27.4	MHz	
	t_{DLW}	PCLK “L” pulse width	11		ns	
	t_{DHW}	PCLK “H” pulse width	11		ns	
DE	t_{DCSS}	DE setup time	10		ns	
	t_{DCSH}	DE hold time	10		ns	
D0~D23	t_{DDS}	RGB Data setup time	10		ns	
	t_{DDH}	RGB Data hold time	10		ns	

Note 1： The input signal rise time and fall time (tr, tf) is specified at 15 ns or less.

Note 2： Measuring of input signals are 0.30 x VDDI for low state and 0.7 x VDDI for high state.

(b) RGB Interface Mode Set

RGB I/F Mode	PCLK	DE	D23-D0	VS	HS	Register VFP[7:0], VBP[7:0] HFP[7:0], HBP[7:0]
RGB Mode 1 (SYNC + DE)	Used	Used	Used	Used	Used	Not used
RGB Mode 2 (SYNC Only)	Used	Not used	Used	Used	Used	Used

In RGB Mode 1： Writing data to line buffer is done by PCLK and Video Data Bus (D23 to D0), when DE is high state. The external clocks (PCLK, VS and HS) are used for internal displaying clock. So, controller must always transfer PCLK, VS and HS signal to IC DDI.

In RGB Mode 2： Back porch of Vsync VBP is defined by VBP[7:0] of RGBCTR command. And back porch of Hsync HBP is defined by HBP[7:0] of RGRCTR command. Front porch of Vsync VFP is defined by VFP[7:0] of RGBCTR command. And front porch of Hsync HFP is defined by HFP[7:0] of RGBCTR command.

(c) Video signal data writing method in RGB Mode 1 Interface

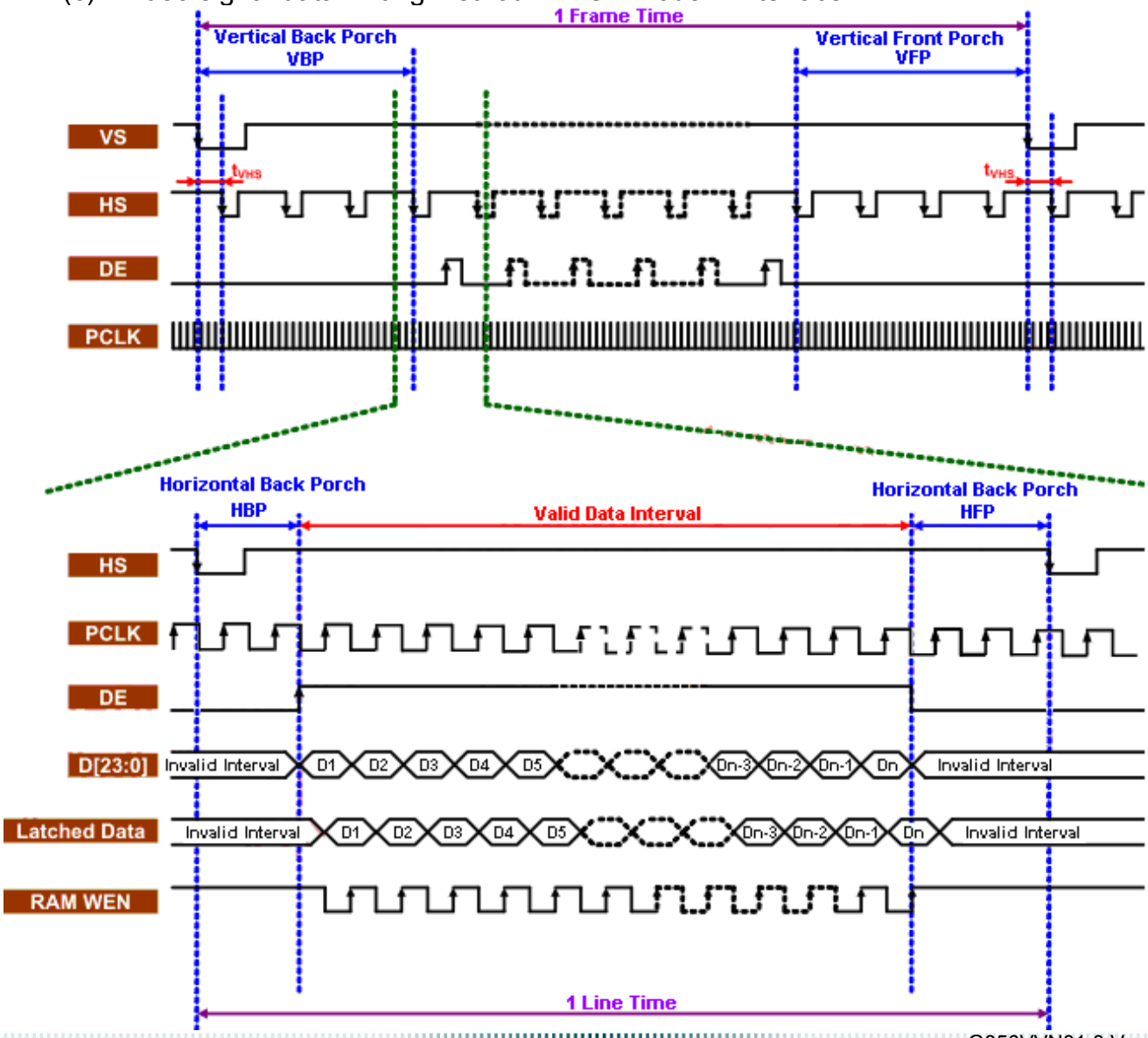

Notes：

1. Constraint:
   V-Back Porch (Vsync+VBP)≧ 5 HS lines, V-Front-Borch (VFP) ≧ 5 HS lines
   H-Back Porch (Hsync+HBP)≧ 5 PCLK clocks, H-Front-Porch (HFP) ≧ 2 PCLK clocks
2. t VHS≧ 400ns
3. D[23:0] (DR[7:0], DG[7:0], DB[7:0])

(d) Video signal data writing method in RGB Mode 2 Interface

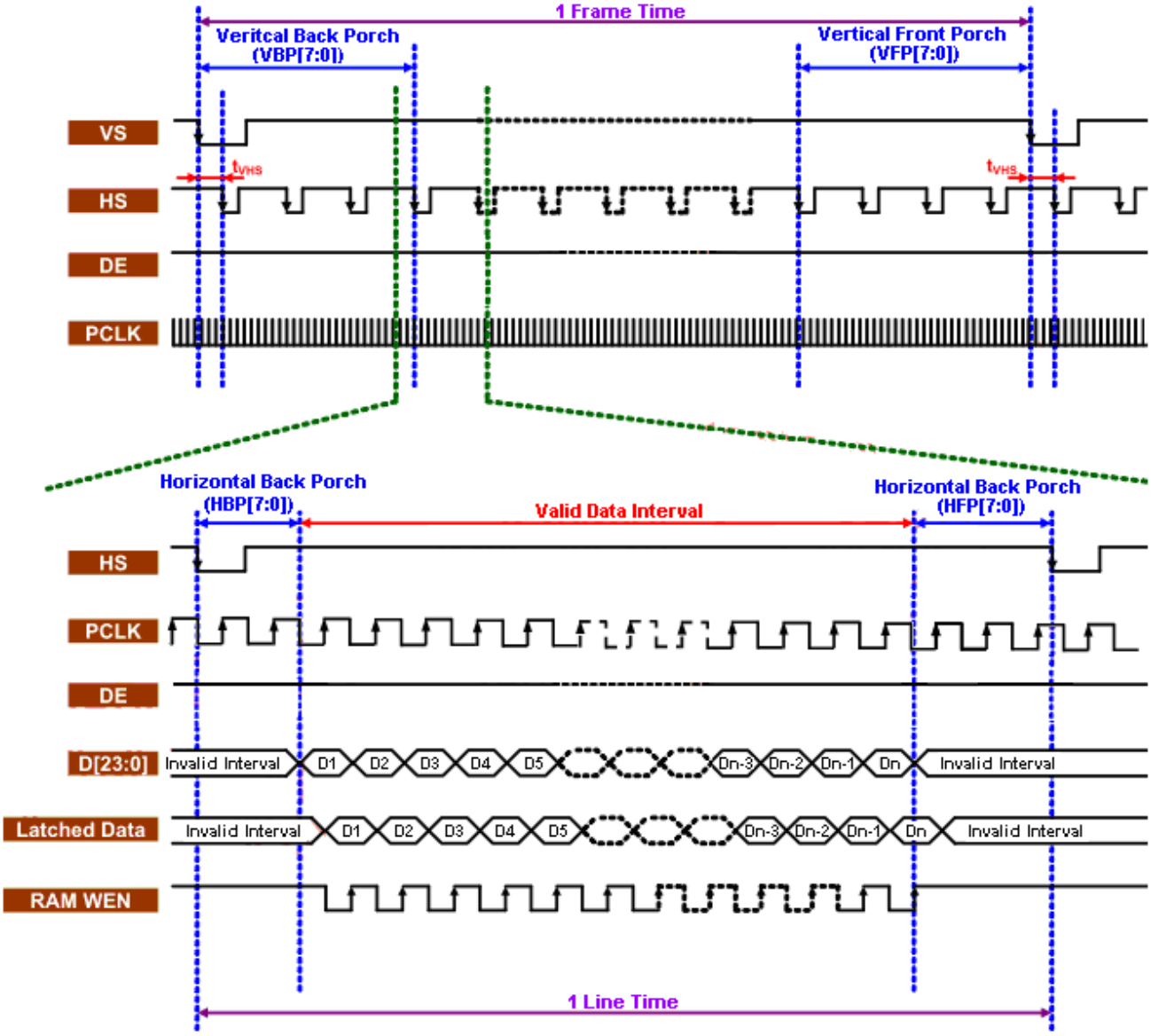

Notes：

1. Constraint:
   V-Back Porch (VBP[7:0]) ≧ 5 HS lines, V-Front Porch (VFP[7:0]) ≧ 5 HS lines
   H-Back Porch (HBP[7:0]) ≧ 5 PCLK clocks, H-Back Porch (HFP[7:0]) ≧ 2 PCLK clocks
2. t VHS≧ 400ns
3. D[23:0] (DR[7:0], DG[7:0], DB[7:0])

(e) Vertical and horizontal timing

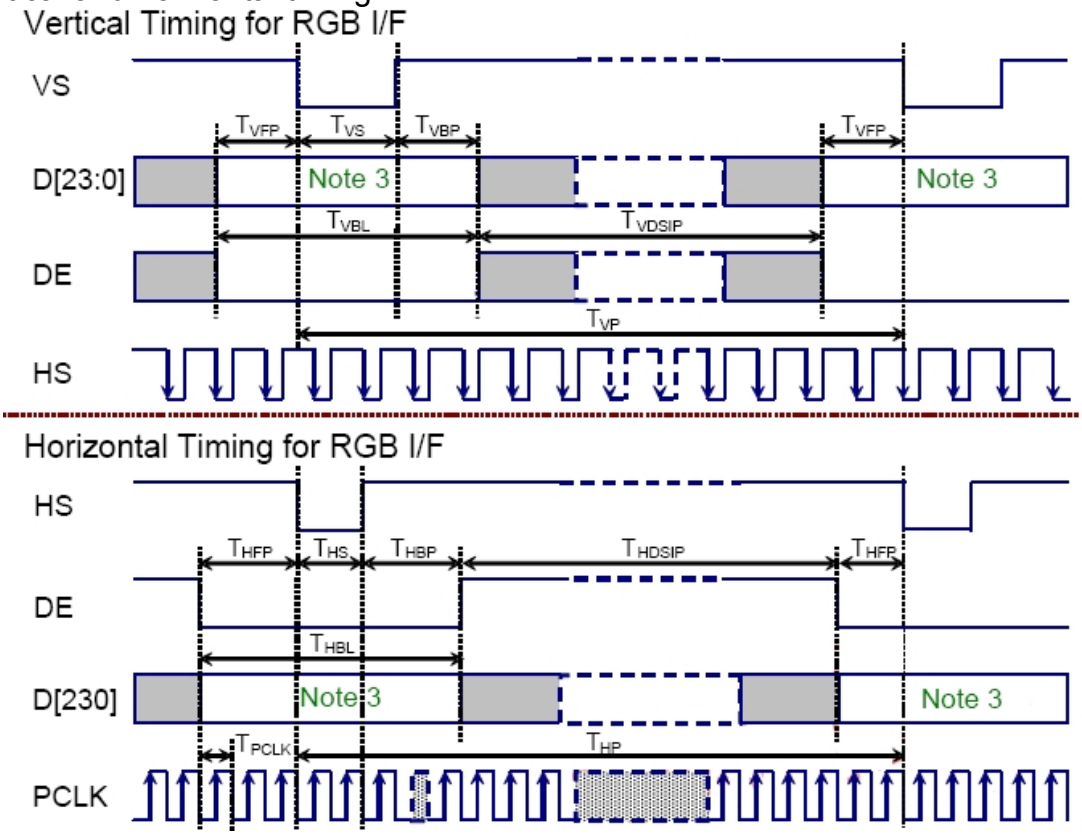

VDDI=1.65~3.3V, VCI=2.6~3.3V, TA=25℃

Vertical Timing						
Item	**Symbol**	**Min.**	**Typ.**	**Max.**	**Unit**	**Remark**
Vertical cycle period	T_{VP}	810	832	930	HS	
Vertical low pulse width	T_{VS}	2	-	-	HS	
Vertical front porch	T_{VFP}	5	-	64	HS	VFP[5:0]
Vertical back porch	T_{VBP}	3	-	64	HS	
Vertical data start line	$T_{VS} + T_{VBP}$	5	-	128	HS	VBP[5:0]
Vertical blanking period	$T_{VBL} = T_{VS} + T_{VBP} + T_{VFP}$	10	32	-	HS	
Vertical active area	T_{VDISP}	-	800	-	HS	
Vertical refresh rate	T_{VRR}	55	60	70	Hz	
Horizontal Timing						
Item	**Symbol**	**Min.**	**Typ.**	**Max.**	**Unit**	**Remark**
Horizontal cycle period	T_{HP}	487	512	610	PCLK	Note 2
Horizontal low pulse width	T_{HS}	2	-	-	PCLK	
Horizontal front porch	T_{HFP}	2	-	64	PCLK	HFP[5:0]
Horizontal back porch	T_{HBP}	3	-	64	PCLK	
Horizontal data start point	$T_{HS} + T_{HBP}$	5	-	128	PCLK	HBP[5:0]
Horizontal blanking period	$T_{HBL} = T_{HS} + T_{HBP} +$	7	32	-	PCLK	
Horizontal active area	T_{HDISP}	-	480	-	PCLK	
Pixel clock cycle	$F_{PCLKCYC}$	21.7	25.6	27.4	MHz	

6.5 Power On / Off Characteristics

a. Recommended Power On/Off Sequence

The LCD adopts high voltage driver IC, so it could be permanently damaged under a wrong power on/off sequence. The suggested LCD power sequence is below:

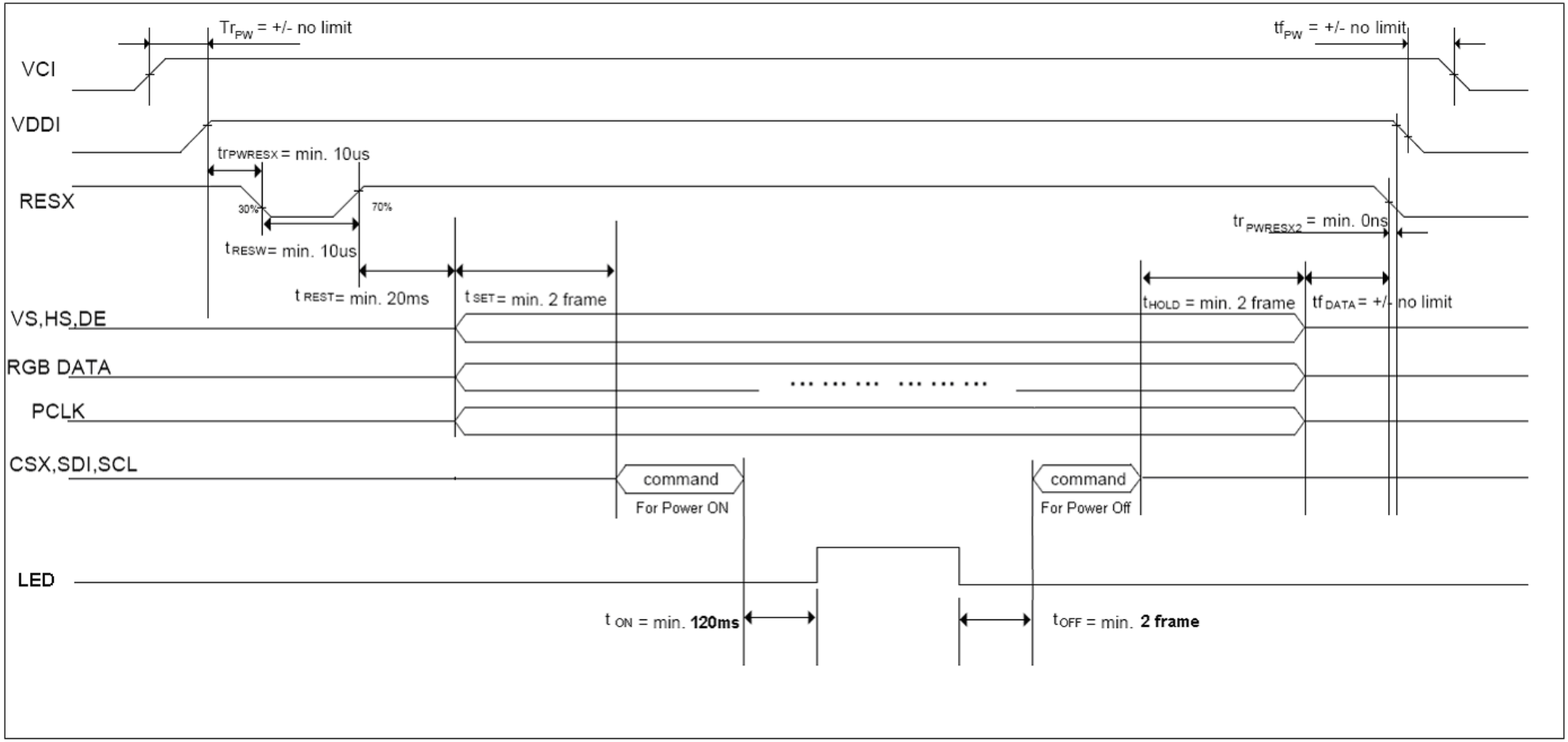

6.6 Command Descriptions

a. User Command Set

Instruction	Address	Data	Function
SLPIN	1000h	No Argument	Sleep in & booster off
SLPOUT	1100h	No Argument	Sleep out & booster on
DISPOFF	2800h	No Argument	Display off
DISPON	2900h	No Argument	Display on

b. Recommended Power On Register Setting

No.	Address	Data	Description
1	F000h	55h	Enable Manufacture Command for Page 0
2	F001h	AAh	
3	F002h	52h	
4	F003h	08h	
5	F004h	00h	
6	B100h	0Ch	Display Option Control
7	B101h	00h	
8	BC00h	05h	Inversion Driving Control
9	BC01h	05h	
10	BC02h	05h	
11	F000h	55h	Enable Manufacture Command for Page1
12	F001h	AAh	
13	F002h	52h	
14	F003h	08h	
15	F004h	01h	
16	B900h	TBD	Power Control for VGH
17	B901h	TBD	
18	B902h	TBD	
19	BA00h	TBD	Power Control for VGL
20	BA01h	TBD	
21	BA02h	TBD	
22	BE00h	TBD	Power Control for VCOM
23	BE01h	TBD	
24	BC00h	TBD	Power Control for VGMP / VGSP
25	BC01h	TBD	
26	BC02h	TBD	
27	BD00h	TBD	Power Control for VGMN / VGSN

28	BD01h	TBD	
29	BD02h	TBD	
30~81	D100h~D133h	Gamma Setting	Gamma Correction for Positive Red
82~133	D200h~D233h	Gamma Setting	Gamma Correction for Positive Green
134~185	D300h~D333h	Gamma Setting	Gamma Correction for Positive Blue
186~237	D400h~D433h	Gamma Setting	Gamma Correction for Negative Red
238~289	D500h~D533h	Gamma Setting	Gamma Correction for Negative Green
290~341	D600h~D633h	Gamma Setting	Gamma Correction for Negative Blue
342	1100h		EXIT_SLEEP_MODE
Wait for more than 120ms			
343	2900h	-	SET_DISPLAY_ON

c. Gamma Setting

No.	Data	No.	Data	No.	Data
1	TBD	19	TBD	37	TBD
2	TBD	20	TBD	38	TBD
3	TBD	21	TBD	39	TBD
4	TBD	22	TBD	40	TBD
5	TBD	23	TBD	41	TBD
6	TBD	24	TBD	42	TBD
7	TBD	25	TBD	43	TBD
8	TBD	26	TBD	44	TBD
9	TBD	27	TBD	45	TBD
10	TBD	28	TBD	46	TBD
11	TBD	29	TBD	47	TBD
12	TBD	30	TBD	48	TBD
13	TBD	31	TBD	49	TBD
14	TBD	32	TBD	50	TBD
15	TBD	33	TBD	51	TBD
16	TBD	34	TBD	52	TBD
17	TBD	35	TBD		
18	TBD	36	TBD		

d. Recommended Power Off Register Setting

No.	Address	Data	Description
1	2800h	-	SET_DISPLAY_OFF
2	1000h	-	ENTER_SLEEP_MODE

7. Reliability Test Criteria

Test Items	Required Condition			Remark
High Temperature Operation	70℃	240Hours	Operation	
Low Temperature Operation	0℃	240Hours	Operation	
High Temperature Storage	80℃	240Hours	Non-operation	
Low Temperature Storage	-10℃	240Hours	Non-operation	
High temperature and high humidity	60℃, 90% RH	240Hours	Operation	
Thermal Shock	-10℃/60 min ,80℃/60 min ,50cycles		Non-operation	
Mechanical shock	50G, 20ms, Half-sine wave, Once for each direction. (±x, ±y, ±z)		Non-operation	
Vibration	1.5G, 10~200~10Hz, Sine wave, 30min/axis (X, Y, Z)		Non-operation	
On/off	On/10 sec, off/10 sec, 30,000 cycles, 25℃			
Electrostatic discharge	Contact = ± 4 kV, class B (R=330,C=150pF) Air = ± 8 kV, class B (R=330,C=150pF) 1sec, 8 points, 25times/point			

Note 1： Each test is done by new TFT-LCD module. Don't use the same TFT-LCD module repeatedly for reliability test.

Note 2： The reliability test is performed only to examine the TFT-LCD module capability.

Note 3： In the standard condition, there is not display function NG issue occurred. All cosmetic specifications are judged before the reliability stress. To inspect TFT-LCD module after reliability test, please store it at room temperature and room humidity for 24 hours at least in advance.

Note 4： There should be no condensation on the surface of module during test.

Note 5： Short time operation between -10℃~-0℃ doesn't provide full performance but a correct image on the LCD. The LCD is guaranteed to suffer no permanent damage.

Note 6： T fixture of Vibration and Shock test should be hard and rigid enough in order to protect from module twisting or bending issue.

Note 7： ESD criteria is as below：

Class A	Normal operation. No degradation. No failures
Class B	Some performance degradation allowed. No data lost. Self-recoverable. No hardware failures.
Class C	Temporary performance degradation. Recovery by operator is acceptable. No hardware failures.
Class D	Hardware failures.

8. Mechanical Characteristics

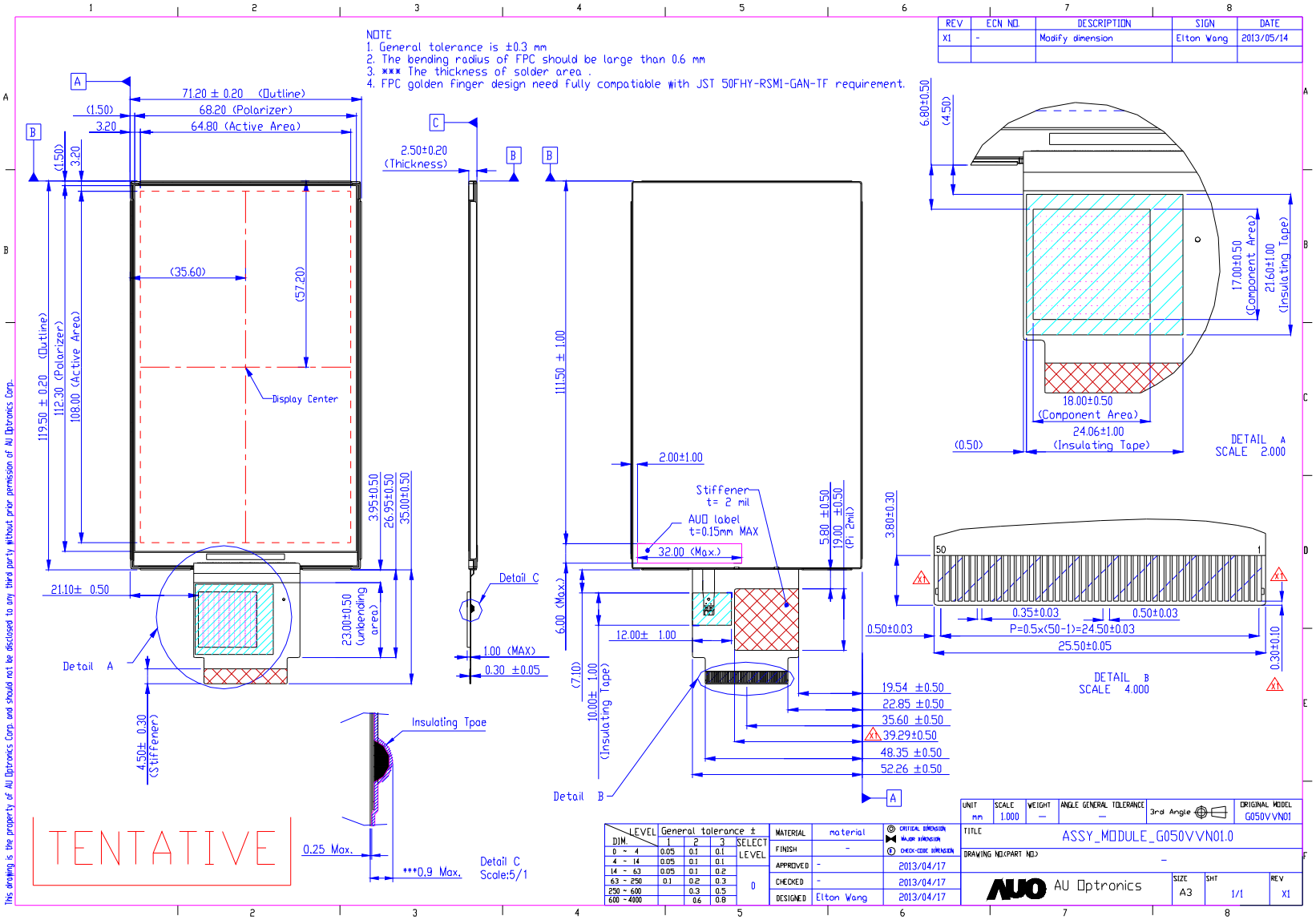

9. Label and Packaging

9.1 Shipping Label (on the rear side of TFT-LCD display)

Fig. 9-1 Label size:30*5mm

9.2 Packing form

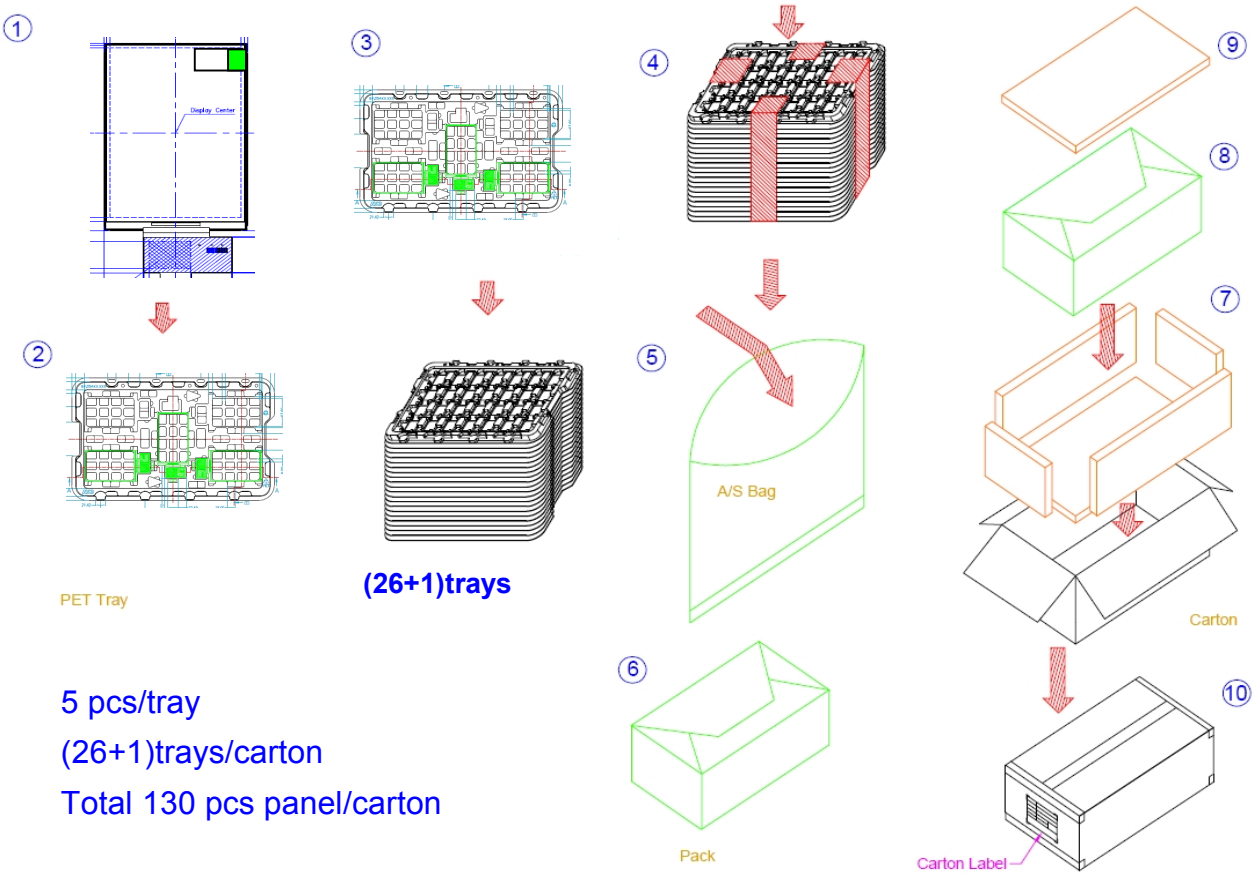

5 pcs/tray

(26+1)trays/carton

Total 130 pcs panel/carton

Max. capacity: 130 pieces TFT-LCD module per carton
Max. weight: 11.5 kg per carton
Outside dimension of carton:528(L)mm* 348(W)mm* 266(H)mm
Pallet : 1070(L)mm* 1070(W)mm* 135(H)mm

9.3 Palletizing sequence

Module by air：(2 *3) *5 layers，one pallet put 30 boxes，total 3900pcs module

Module by sea：(2 *3) *5 layers + (2 *3) *2 layers , two pallet put 42 boxes，total 5460pcs module

Module by sea_HQ：(2 *3) *5 layers+(2 *3) *3 layers, two pallet put 48 boxes, total 6240pcs module

10 Safety

10.1 Standard

The TFT-LCD Module will be satisfied all requirements for compliance with UL 60950-1 (U.S.A. Information Technology Equipment).

10.1.1 Keen Edge Requirements

There will be no keen edges or corners on the display assembly that could cause injury.

10.1.2 Flammability

All components including electrical components that do not meet the flammability grade UL94-V1 in the TFT-LCD Module.

The critical components of safety will be compliance with UL 60950 requirement exception approval process.

The printed circuit board will be made from material rated 94-V1 or better. The actual UL flammability rating will be printed on the printed circuit board.

10.2 Capacitors

If any polarized capacitors are used in the TFT-LCD module, provisions will be made to keep them from being inserted backwards.

10.3 National Test Lab Requirement

The TFT-LCD Module will satisfy all requirements for compliance to UL 60950 (U.S.A. Information Technology Equipment).