Spec. No.: MDGD012-SN01-0

Version: 0

Total pages: 28

Date: 2004- October-27

AU OPTRONICS CORPORATION

Product Functional Specifications

12.1” SVGA Color TFT-LCD Module

Model Name: G0121SN01 V.0

Approved by	Prepared by
Martin Sun	*Cynthia Lin*

GD- MDBU Marketing Division / AU Optronics Croporation

Customer	Checked & Approved by

(C) Copyright AU Optroncis, Inc.
2004 All Right Reserved.
No Reproduction and Redistribution Allowed.

Version: 0
Total Pages: 28
Date: 2004/10/27

Product Functional Specification

12.1 inch SVGA Color TFT LCD Module
Model Name: G121SN01 V.0

( ) Preliminary Specification
( ) Final Specification

Note: This Specification is subject to change without notice.

(C) Copyright AU Optroncis, Inc.
2004 All Right Reserved.
No Reproduction and Redistribution Allowed.

I. Contents

1.0 Handling Precautions……..…5

2.0 General Description……6

2.1 Display Characteristics

2.2 Functional Block Diagram

3.0 Absolute Maximum Ratings……...8

4.0 Optical Characteristics……9

5.0 Signal Interface……12

5.1 Connectors

5.2 Signal Pin

5.3 Signal Description

5.4 Signal Electrical Characteristics

5.5 Signal for Lamp Connector

6.0 Pixel Format Image……16

7.0 Parameter Guide Line CCFL Inverter……...17

8.0 Interface Timing……18

8.1 Timing Characteristics

8.2 Timing Definition

8.3 Timing Chart

9.0 Power Consumption……..22

10.0 Power ON/OFF Sequence……23

11.0 Reliability / Safety Requirement……..…24

11.1 Reliability Test Conditions

11.2 Safety

11.3 Green

12.0 Packing Dimension……25

13.0 Mechanical Characteristics……..26

13.1 LCM Outline dimension (Front View)

13.2 LCM Outline Dimension (Rear View)

13.3 Screw Note

(C) Copyright AU Optroncis, Inc.
2004 All Right Reserved.
No Reproduction and Redistribution Allowed.

II. Record of Revision

Version and Date	Page	Old Description	New Description	Remark
0. 2004/10/27	All	First Draft	All	

(C) Copyright AU Optroncis, Inc.
2004 All Right Reserved.
No Reproduction and Redistribution Allowed.

1.0 Handing Precautions

1) Since front polarizer is easily damaged, pay attention not to scratch it.
2) Be sure to turn off power supply when inserting or disconnection from input connector.
3) Wipe off water drop immediately. Long contact with water may cause discoloration or spots.
4) When the panel surface is soiled, wipe it with absorbent cotton or other soft cloth.
5) Since the panel is made of glass, it may break or crack if dropped or bumped on hard surface.
6) Since CMOS LSI is used in this module, take care of static electricity and insure human earth when handling.
7) Do not open nor modify the module Assembly.
8) Do not press the reflector sheet at the back of the module to any directions.
9) In case if a module has to be put back into the packing container slot after once it was taken out from the container, do not press the center of the CCFL Reflector edge. Instead, press at the far ends of the CFL Reflector edge softly. Otherwise the TFT module may be damaged.
10) At the insertion or removal of the Signal Interface Connector, be sure not to rotate nor tilt the interface Connector of the TFT module.
11) After installation of the TFT module into an enclosure, do not twist nor bend the TFT module even momentary. At designing the enclosure, it should be taken into consideration that no bending/twisting forces are applied to the TFT module from outside. Otherwise the TFT module may be damaged.
12) Cold cathode fluorescent lamp in LCD contains a small amount of mercury. Please follow local ordinances or regulations for disposal.
13) Small amount of materials having no flammability grade is used in the LCD module should be supplied by power complied with requirements of Limited Power Source, or be applied exemption.
14) The LCD module is designed so that the CCFL in it is supplied by Limited Current Circuit. Do not connect the CFL in Hazardous Voltage Circuit.

(C) Copyright AU Optroncis, Inc.
2004 All Right Reserved.
No Reproduction and Redistribution Allowed.

2.0 General Description

This specification applies to the 12.1 inch Color TFT LCD Module G121SN01 V.0.
This module is designed for display units of Industrial Applications.
The screen format is intended to support the SVGA (800(H) x 600(V)) screen and 262k colors (RGB 6-bits data driver).
All input signals are LVDS interface compatible.
The module does not contain an inverter card for backlight.

2.1 Display Characteristics

The following items are characteristics summary on the table under 25℃ condition：

Items	Unit	Specifications
Screen Diagonal	[mm]	310 (12.1")
Active Area	[mm]	246.0(H) x 184.5(V)
Pixel H x V		800(x3) x 600
Pixel Pitch	[mm]	0.3075(H) x 0.3075(V)
Pixel Arrangement		R.G.B. Vertical Stripe
Display Mode		Normally White
Typical White Luminance (ICFL=6 mA)	[cd/m^2]	400 Typ. (center)
Contrast Ratio		500：1 Typ.
Optical Rise Time/Fall Time	[msec]	10/25 Typ.
Nominal Input Voltage VDD	[Volt]	+3.3 Typ.
Typical Power Consumption (VDD line + VCFL line)	[Watt]	7.8 Typ
Weight	[Grams]	660 ±10
Physical Size	[mm]	279.0(W) x 209.0(H) x 11(D)
Electrical Interface		LVDS
Support Color		Native 262K colors (RGB 6-bit driver)
Temperature Range Operating Storage(Shipping)	 [℃] [℃]	 -10 to +65 -30 to +70

(C) Copyright AU Optroncis, Inc.
2004 All Right Reserved.
No Reproduction and Redistribution Allowed.

2.2 Functional Block Diagram

The following diagram shows the functional block of the 12.1 inch Color TFT LCD Module：

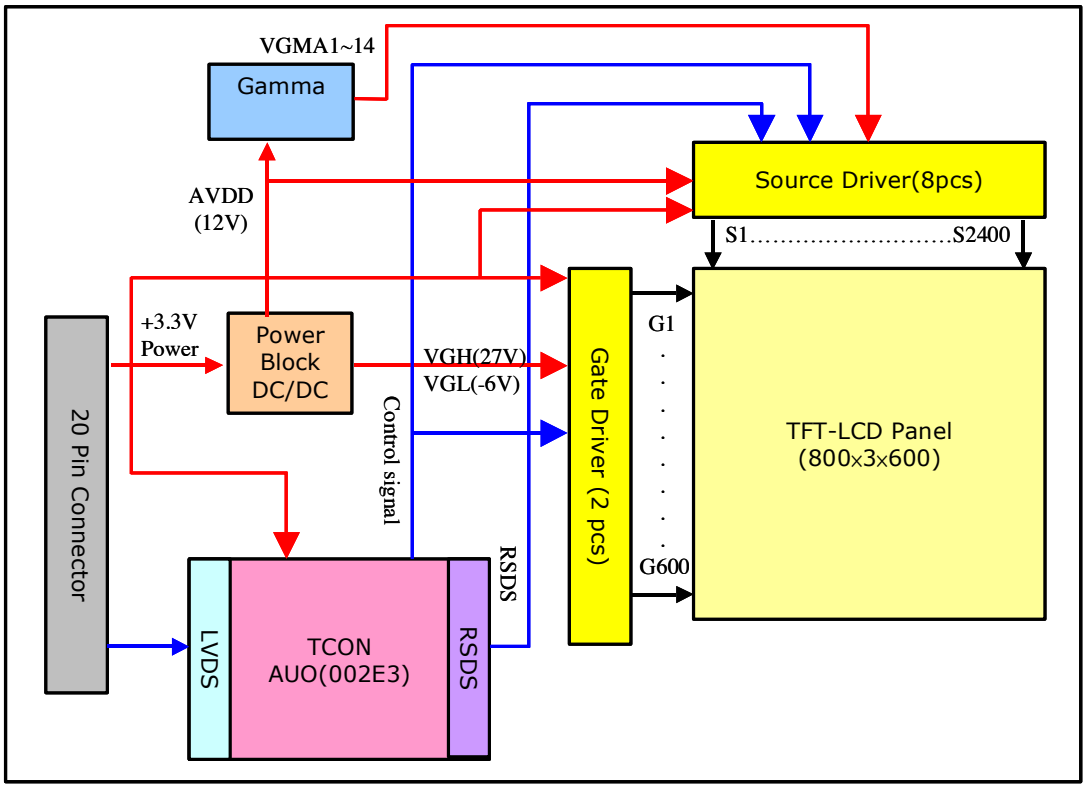

(C) Copyright AU Optroncis, Inc.
2004 All Right Reserved.
No Reproduction and Redistribution Allowed.

3.0 Absolute Maximum Ratings

Absolute maximum ratings of the module is as follows：

Item	Symbol	Min	Max	Unit	Conditions
Logic/LCD Drive Voltage	VDD	-0.3	+4.0	[Volt]	
Input Voltage of Signal	Vin	-0.3	VDD+0.3	[Volt]	
CCFL Current	ICFL	4	7	[mA] rms	
CCFL Ignition Voltage	Vs	-	690	Vrms	25°C
			890		0°C
Operating Temperature	TOP	-10	+65	[℃]	Note1
Operating Humidity	HOP	8	95	[%RH]	Note1
Storage Temperature	TST	-30	+70	[℃]	Note1
Storage Humidity	HST	5	95	[%RH]	Note1

Note1：Maximum Wet-Bulb should be 39℃ and no condensation.

TBD

(C) Copyright AU Optroncis, Inc.
2004 All Right Reserved.
No Reproduction and Redistribution Allowed.

4.0 Optical Characteristics

The optical characteristics are measured under stable conditions as follows under 25℃ condition：

Item	Unit	Conditions	Min.	Typ.	Max.
Viewing Angle	[degree]	Horizontal (Right)	—	70	—
	[degree]	K = 10 (Left)		70	
K：Contrast ratio	[degree]	Vertical (Upper)	—	50	—
	[degree]	K = 10 (Lower)		60	
White Uniformity		13 Points	—	—	1.6
Contrast ratio		$\theta = 0^\circ$	400	500	—
Response Time	[msec]	Rising	—	10	20
(Room Temp)	[msec]	Falling	—	25	30
Color Chromaticity Coordinates(CIE)		Red x	TBD	TBD	TBD
		Red y	TBD	TBD	TBD
		Green x	TBD	TBD	TBD
		Green y	TBD	TBD	TBD
		Blue x	TBD	TBD	TBD
		Blue y	TBD	TBD	TBD
		White x	0.283	0.313	0.343
		White y	0.299	0.329	0.359
White Luminance (ICFL 6mA)	[cd/m^2]	$\theta = 0^\circ$	320	400	—

(C) Copyright AU Optroncis, Inc.
2004 All Right Reserved.
No Reproduction and Redistribution Allowed.

Note 1: Definition of white uniformity:

White uniformity is calculated with the following formula.
Luminance are measured at the following nine points (1~13).

$$\delta_W = \frac{\text{Maximum Brightness of thirteen points}}{\text{Minimum Brightness of thirteen points}}$$

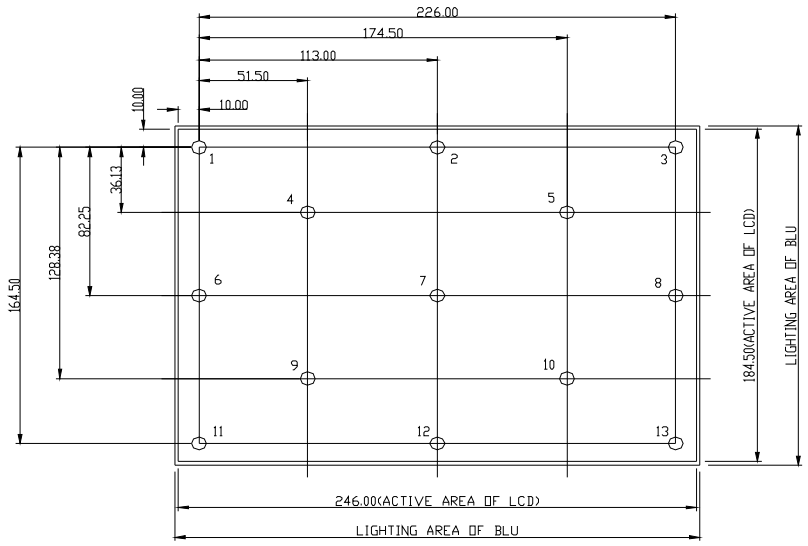

Note 2: Measurement method

The LCD module should be stabilized at given temperature for 30 minutes to avoid abrupt temperature change during measuring. In order to stabilize the luminance, the measurement should be executed after lighting Backlight for 30 minutes in a stable, windless and dark room.

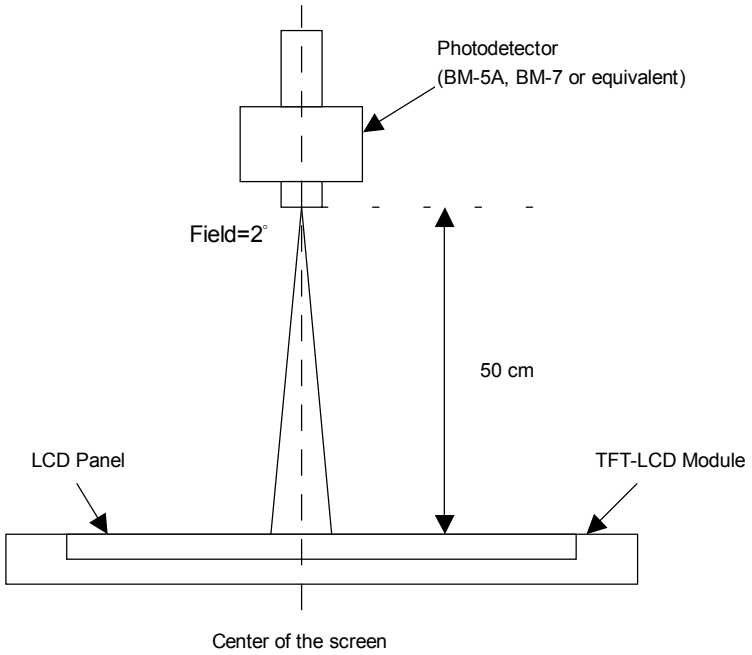

(C) Copyright AU Optroncis, Inc.
2004 All Right Reserved.
No Reproduction and Redistribution Allowed.

Note 3: Definition of response time

The output signals of BM-7 or equivalent are measured when the input signals are changed from “Black” to “White” (falling time) and from “White” to “Black” (rising time), respectively. The response time interval between the 10% and 90% of amplitudes. Refer to figure as below.

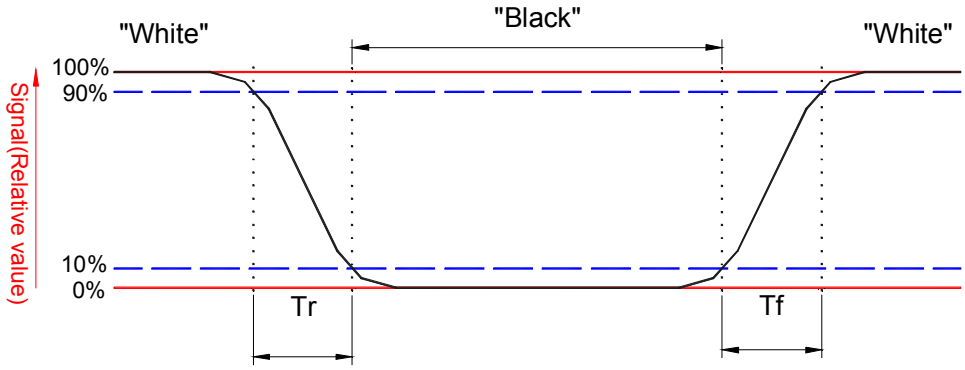

Note 4: Definition of contrast ration

Contrast ratio is calculated with the following formula.

$$\text{Contrast ratio (CR)} = \frac{\text{Brightness on the “White” state}}{\text{Brightness on the “Black” state}}$$

Note 5: Definition of viewing angle

Viewing angle is the measurement of contrast ratio ≧10, at the screen center, over a 180° horizontal and 180° vertical range (off-normal viewing angles). The 180° viewing angle range is broken down as follows; 90° (θ) horizontal left and right and 90° (Φ) vertical, high (up) and low (down). The measurement direction is typically perpendicular to the display surface with the screen rotated about its center to develop the desired measurement viewing angle.

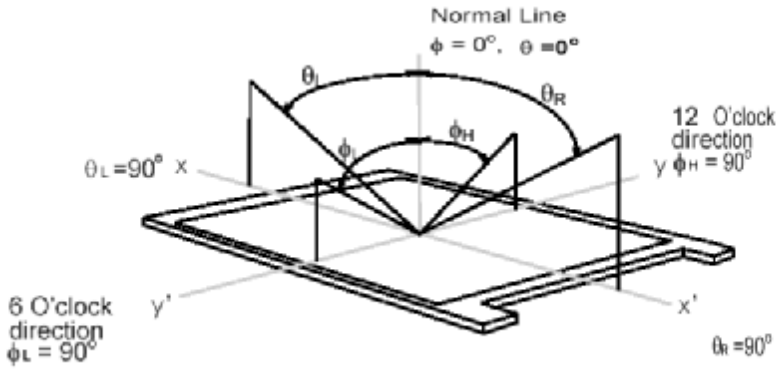

(C) Copyright AU Optroncis, Inc.
2004 All Right Reserved.
No Reproduction and Redistribution Allowed.

5.0 Signal Interface

5.1 Connectors

Physical interface is described as for the connector on module.

These connectors are capable of accommodating the following signals and will be following components.

Connector Name / Designation	For Signal Connector
Manufacturer	JAE
Type / Part Number	FI-SE20M or compatible
Mating Connector / Part Number	TBD

Connector Name / Designation	For Lamp Connector
Manufacturer	JST
Type / Part Number	JST BHR-03VS-1 or compatible
Mating Connector / Part Number	JST SM03(4.0)B-BHS-1-TB

5.2 Signal Pin

Pin No.	Signal Name	Pin No.	Signal Name
1	VDD	2	VDD
3	GND	4	GND
5	RxIN0-	6	RxIN0+
7	GND	8	RxIN1-
9	RxIN1+	10	GND
11	RxIN2-	12	RxIN2+
13	GND	14	CKIN-
15	CKIN+	16	GND
17	NC	18	NC
19	NC	20	NC

(C) Copyright AU Optroncis, Inc.
2004 All Right Reserved.
No Reproduction and Redistribution Allowed.

5.3 Signal Description

The module using a LVDS receiver. LVDS is a differential signal technology for LCD interface and high speed data transfer device. Transmitter shall be SN75LVDS84 (negative edge sampling) or compatible.

Note：Input signals shall be low or Hi-Z state when VDD is off.

Signal Name	Description
RxIN0-, RxIN0+	LVDS differential data input (Red0-Red5, Green0)
RxIN1-, RxIN1+	LVDS differential data input (Green1-Green5, Blue0-Blue1)
RxIN2-, RxIN2+	LVDS differential data input (Blue2-Blue5, Hsync, Vsync, DE)
CKIN-, CKIN+	LVDS differential clock input
VDD	+3.3V Power Supply
GND	Ground
NC	No Connection

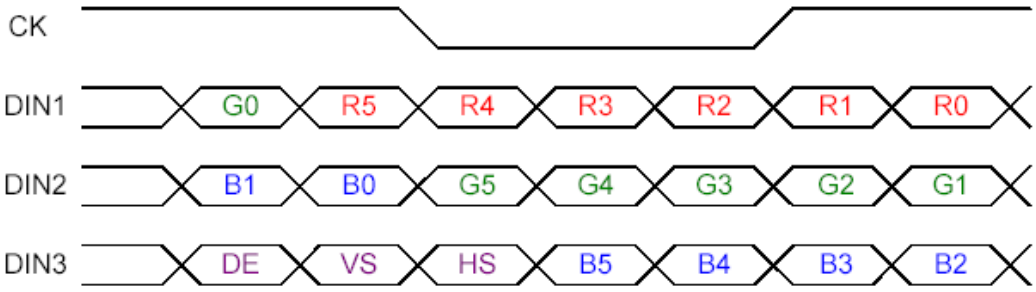

(C) Copyright AU Optroncis, Inc.
2004 All Right Reserved.
No Reproduction and Redistribution Allowed.

Signal Name	Description	
+RED5 +RED4 +RED3 +RED2 +RED1 +RED0	Red Data 5 (MSB) Red Data 4 Red Data 3 Red Data 2 Red Data 1 Red Data 0 (LSB) Red-pixel Data	Red-pixel Data Each red pixel's brightness data consists of these 6 bits pixel data.
+GREEN5 +GREEN4 +GREEN3 +GREEN2 +GREEN1 +GREEN0	Green Data 5 (MSB) Green Data 4 Green Data 3 Green Data 2 Green Data 1 Green Data 0 (LSB) Green-pixel Data	Green-pixel Data Each green pixel's brightness data consists of these 6 bits pixel data.
+BLUE5 +BLUE4 +BLUE3 +BLUE2 +BLUE1 +BLUE0	Blue Data 5 (MSB) Blue Data 4 Blue Data 3 Blue Data 2 Blue Data 1 Blue Data 0 (LSB) Blue-pixel Data	Blue-pixel Data Each blue pixel's brightness data consists of these 6 bits pixel data.
CLK	Data Clock	The typical frequency is 40MHz. The signal is used to strobe the pixel data and DE signals. All pixel data shall be valid at the falling edge when the DE signal is high.
DE	Display Timing	This signal is strobed at the falling edge of CLK. When the signal is high, the pixel data shall be valid to be displayed.
VSYNC	Vertical Sync	The signal is synchronized to CLK.
HSYNC	Horizontal Sync	The signal is synchronized to CLK.

Note：Output signals from any system shall be low or Hi-Z state when VDD is off.

(C) Copyright AU Optroncis, Inc.
2004 All Right Reserved.
No Reproduction and Redistribution Allowed.

5.4 Signal Electrical Characteristics

Input signals shall be low or Hi-Z state when VDD is off.

It is recommended to refer the specifications of SN75LVDS86(Texas Instruments) in detail.

Signal electrical characteristics are as follows：

Item	Symbol	Min.	Typ.	Max.	Unit
The differential level	| VID |	0.25	0.35	0.45	V
The common mode input voltage	VIC	1.125	1.25	1.375	V
The input setup time	tsu	-0.6	-	0.6	ns
The input hold time	thd	11.74	-	50	ns
High-level input voltage	V_{IAP}	2.0			V
Low-level input voltage	V_{IAM}			0.8	V
Clock frequency	CLK	20		85	MHz

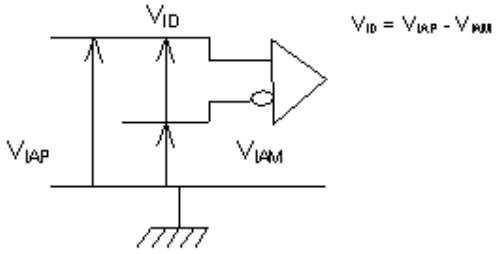

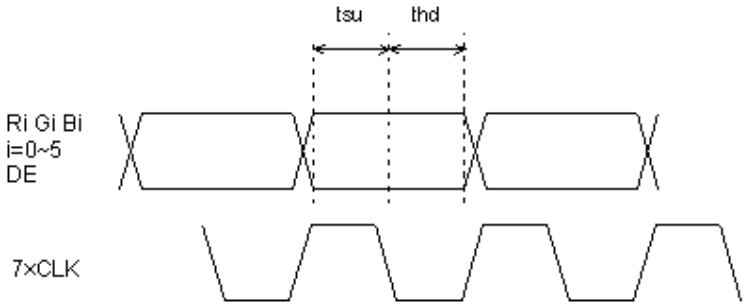

(C) Copyright AU Optroncis, Inc.
2004 All Right Reserved.
No Reproduction and Redistribution Allowed.

5.5 Signal for Lamp connector

Note: CN2 connector (backlight): JST BHR-03VS-1

Mating connector: JST SM03(4.0)B-BHS-1-TB

Pin no.	Symbol	Function	Remark
1	H	CCFL power supply (H.V.)	Cable color: Pink
2	NC	No connection	
3	L	CCFL power supply (GND)	Cable color: White

6.0 Pixel Format Image

Following figure shows the relationship of the input signals and LCD pixel format ：

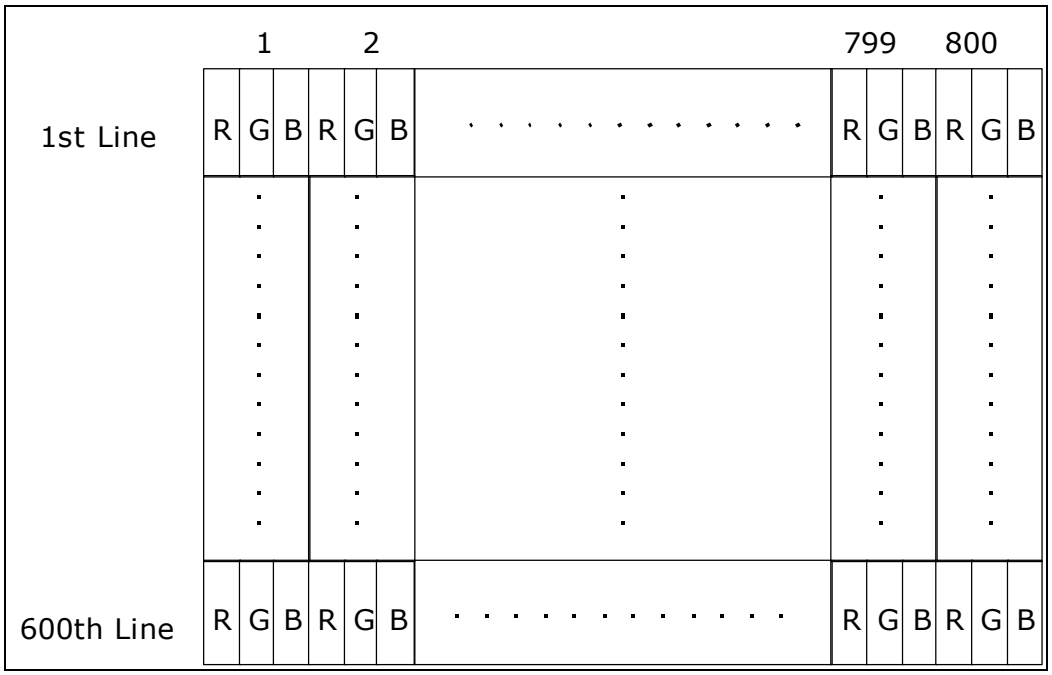

(C) Copyright AU Optroncis, Inc.
2004 All Right Reserved.
No Reproduction and Redistribution Allowed.

7.0 Parameter guide line for CCFL inverter

Parameter	Min	Typ	Max	Units	Condition
White Luminance	320	400	-	Cd/m^2	At 6mA ICFL
CCFL current (ICFL)	TBD	6	TBD	mArms	Note1
CCFL Frequency (FCFL)	40	55	80	KHz	Note4
CCFL Ignition Voltage (Vs)	-	-	690	Vrms	Note1
			890		Note3
CFL Voltage (Reference) (VCFL)	TBD	530	TBD	Vrms	Note1
CCFL Power consumption (PCFL)	TBD	3.2	TBD	W	Note2
Lamp Life Time	-	50,000	-	Hr	Note1, 5

Note1：T=25℃

Note2：Inverter should be designed with the characteristic of lamp. When you are designing the inverter, the output voltage of the inverter should comply with the following conditions.

(1) The area under the positive and negative cycles of the waveform of the lamp current and lamp voltage should be area symmetric (the symmetric ratio should be larger than 90%).

(2) There should not be any spikes in the waveform.

(3) The waveform should be sine wave as possible.

(4) Lamp current should not exceed the maximum value within the operating temperature (It is prohibited to over the maximum lamp current even if operated in the non-guaranteed temperature). When lamp current is over the maximum value for a long time, it may cause fire. Therefore, it is recommend that the inverter should have the current limit circuit.

Note3：The inverter open voltage should be designed larger than the lamp starting voltage at T=0°C, otherwise backlight may be blinking for a moment after turning on or not be able to turn on. The open voltage should be measured after ballast capacitor. If an inverter has shutdown function it should keep its open voltage for longer than 1 second even if lamp connector is open.

Note4：Lamp frequency may produce interference with horizontal synchronous frequency and this may cause line flow on the display. Therefore lamp frequency shall be detached from the horizontal synchronous frequency and its harmonics as far as possible in order to avoid interference.

Note5：Brightness (ICFL=6mA) to be decreased to the 50% of the initial value.

(C) Copyright AU Optroncis, Inc.
2004 All Right Reserved.
No Reproduction and Redistribution Allowed.

8.0 Interface Timings

Basically, interface timing should match the VESA 800x600 /60Hz(VG901101) manufacturing guide line timing.

8.1 Timing Characteristics

(a) DE mode

Item	Symbol	Min.	Typ.	Max.	Unit	Remark
Clock frequency	Fck	30	40	50	MHz	
Horizontal blanking	Thb1	160	256	260	Clk	
Vertical blanking	Tvb1	28	28	28	Th	

(b) HV mode

Item	Symbol	Min.	Typ.	Max.	Unit	Remark
Clock frequency	Fck	30	40	50	MHz	
Hsync period	Th	960	1056	1060	Clk	
Hsync active	Thsd		800		Clk	
Hsync front porch	Thf	114	210	214	Clk	
Hsync pulse width + back porch	Thw + Thb	46	46	46	Clk	
Hsync blanking	Thb1	160	256	260	Clk	
Vsync period	Tv	628	628	628	Th	
Vsync active	Tvsd		600		Th	
Vsync front porch	Tvf	1	1	1	Th	
Vsync pulse width + back porch	Tvw + Tvb	27	27	27	Th	
Hsync/Vsync phase shift	Ths		2		Th	

(C) Copyright AU Optroncis, Inc.
2004 All Right Reserved.
No Reproduction and Redistribution Allowed.

Item	Symbol	Value	Unit	Description
Horizontal display start	The	46	Clk	After falling edge of Hsync, counting 218clk, then getting valid data from 219th clk's data.
Vertical display start	Tve	1	Th	After falling edge of Vsync, counting 25th, then getting 26th Th's data.

(C) Copyright AU Optroncis, Inc.
2004 All Right Reserved.
No Reproduction and Redistribution Allowed.

8.2 Timing Definition

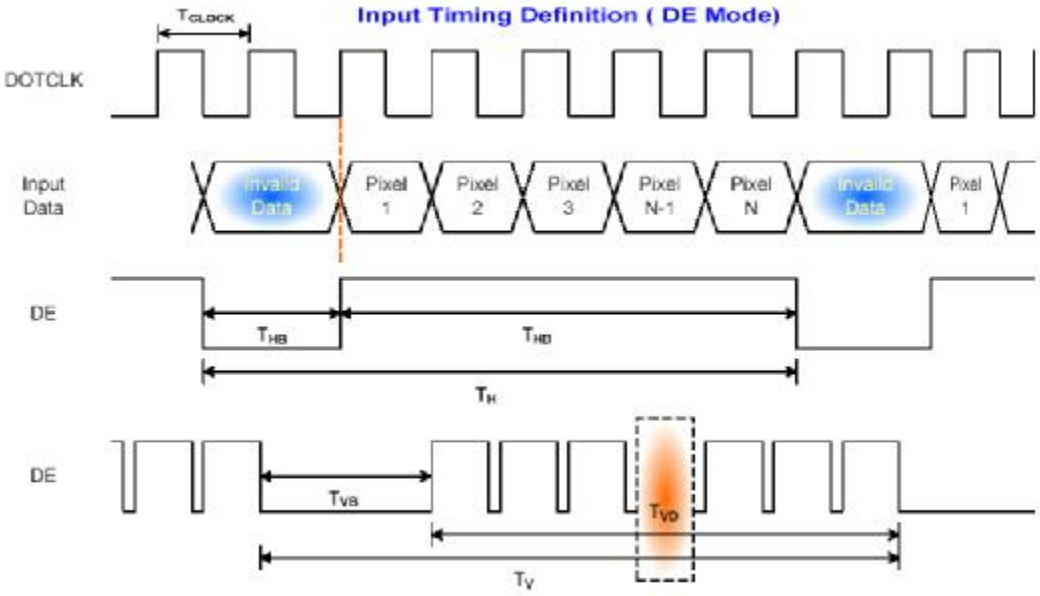

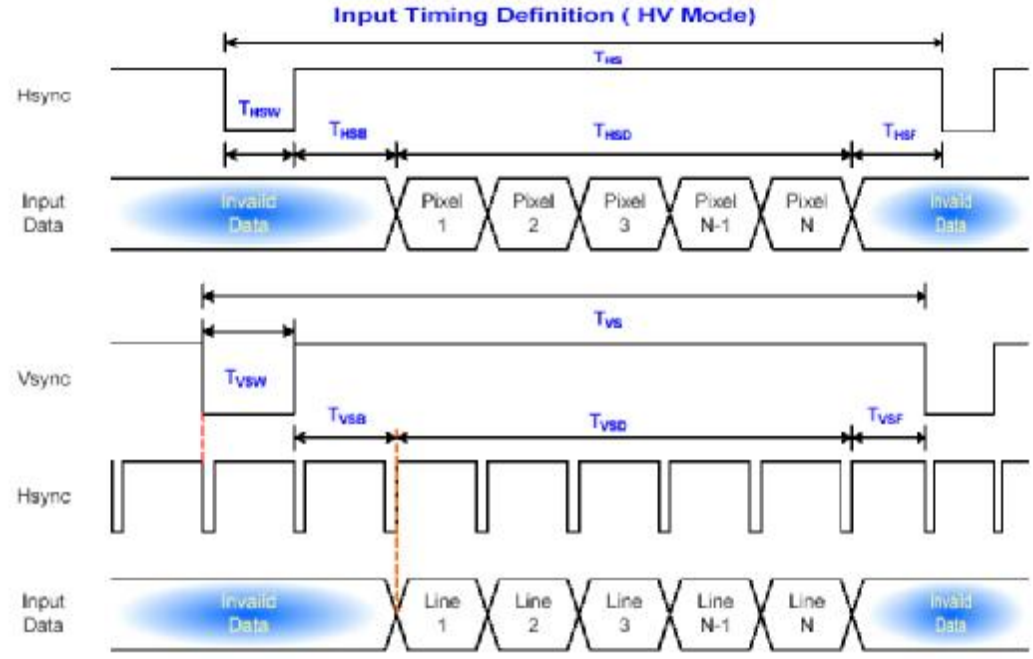

(C) Copyright AU Optroncis, Inc.
2004 All Right Reserved.
No Reproduction and Redistribution Allowed.

8.3 Timing Chart

Vertical Backporch Definition (HV Mode)

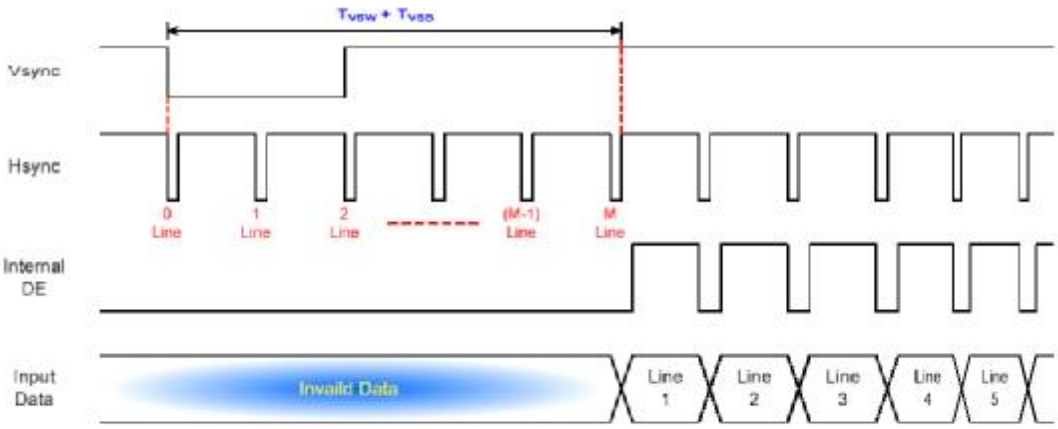

Horizontal Backporch Definition (HV Mode)

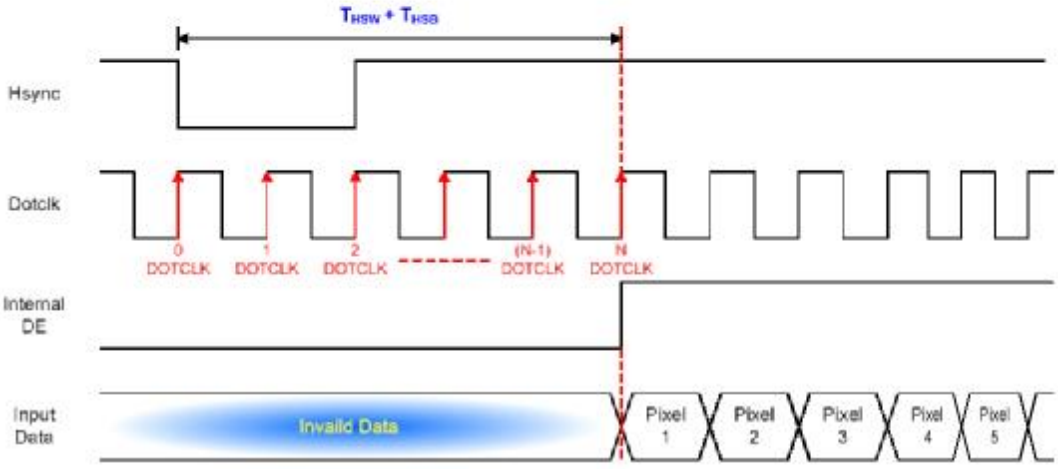

(C) Copyright AU Optroncis, Inc.
2004 All Right Reserved.
No Reproduction and Redistribution Allowed.

9.0 Power Consumption

Input power specifications are as follows ：

Symbol	Parameter	Min	Typ	Max	Units	Condition
Module						
VDD	Logic/LCD Drive Voltage	3.0	3.3	3.6	V	Load Capacitance 20uF
PDD	VDD Power	–	1.4	–	W	All Black Pattern
PDD Max	VDD Power max	–	1.56	–	W	Max Pattern Note
IDD	IDD Current	–	424	–	mArms	64 Grayscale Pattern Note 1
IDD Max	IDD Current max	–	473	-	mArms	Vertical stripe line Pattern Note 2
V_{RP}	Power Ripple Voltage	–	100	–	mVp-p	
I_{RUSH}	Inrush Current	–	1500	–	mApeak	
Lamp						
ICFL	CCFL current	–	6	–	mArms	Ta=25℃
VCFL	CCFL Voltage (Referance)	–	530	–	V	
PCFL	CCFL Power consumption	–	3.2	–	W	
Total Power consumptio		7.8 Watt (w/o Inverter, All black pattern) @LCM circuit 1.4 W (typ.), B/L input 6.4W (typ.)				

Note 1: Effective value (mArms) at V_{CC} = 3.3 V/25℃.

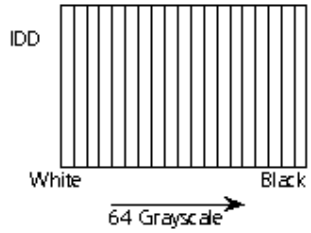

Note 2:

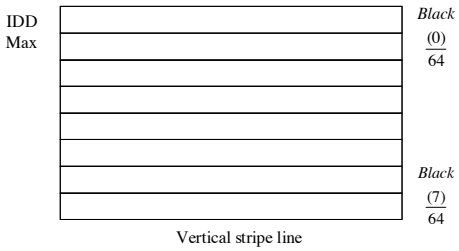

(C) Copyright AU Optroncis, Inc.
2004 All Right Reserved.
No Reproduction and Redistribution Allowed.

10.0 Power ON/OFF Sequence

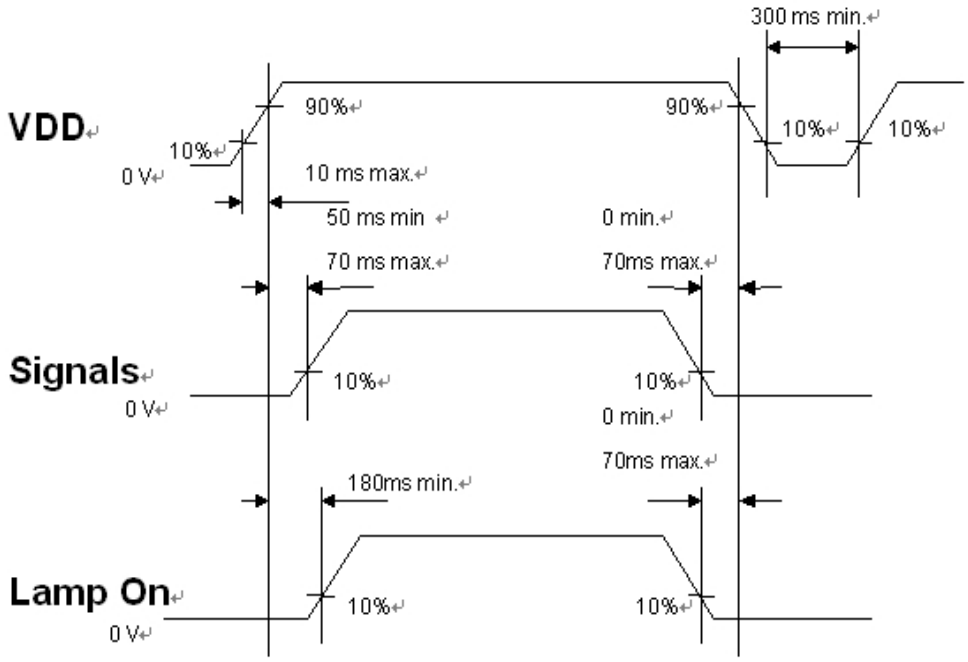

VDD power and lamp on/off sequence is as follows.

Interface signals are also shown in the chart.

Signals from any system shall be Hi-Z state or low level when VDD is off.

(C) Copyright AU Optroncis, Inc.
2004 All Right Reserved.
No Reproduction and Redistribution Allowed.

11.0 Reliability / Safety Requirement

11.1 Reliability Test Conditions

Test tem	Test Condition	Remark
High temperature storage	70℃, 240Hrs	Note 1, 2, 3
Low temperature storage	-30℃, 240Hrs	Note 1, 2, 3
High temperature & high humidity operation	40℃, 90%RH, 240Hrs (No condensation)	Note 1, 2, 3
High temperature operation	65℃, 240Hrs	Note 1, 2, 3
Low temperature operation	-10℃, 240Hrs	Note 1, 2, 3
Electrostatic discharge (non-operation)	150 pF,150Ω,10kV,1 second, 9 position on the panel, 10 times each place	Note 3
Vibration (non-operation)	Sinusoidal vibration,1.5 G zero-to-peak, 50 to 500 Hz, 0.5 octave/minute. The test duration shall be one sweep from 50 to 500 to 50 Hz in each of three mutually perpendicular axes	Note 1, 2, 3
Mechanical shock (non-operation)	50G/11ms, ±X, ±Y, ±Z, half-Sin, one time	Note 1, 2, 3
Thermal shock (non-operation)	1. -30℃±3℃…30minutes 70℃±3℃…30minutes 2. 100 cycles 3. Temperature transition time within 5 minutes	Note 1, 2, 3

Note 1: Evaluation should be tested after storage at room temperature for one hour.

Note 2: There should be no change which might affect the practical display function when the display quality test is conducted under normal operating condition.

Note 3: Judgement: 1. Function OK 2. No serious image quality degradation

(C) Copyright AU Optroncis, Inc.
2004 All Right Reserved.
No Reproduction and Redistribution Allowed.

11.2 Safety

UL

11.3 Green

Lead (Pb) free & RoHs in Taiwan and in Europe

12.0 Packing Dimension:

1. Max. Capacity: 20pcs LCD Modules / per carton
2. Max. Weight: TBD kg / per carton
3. The outside dimension of carton is TBD

(C) Copyright AU Optroncis, Inc.
2004 All Right Reserved.
No Reproduction and Redistribution Allowed.

13.0 Mechanical Characteristics

13.1 LCM Outline dimension (Front View)

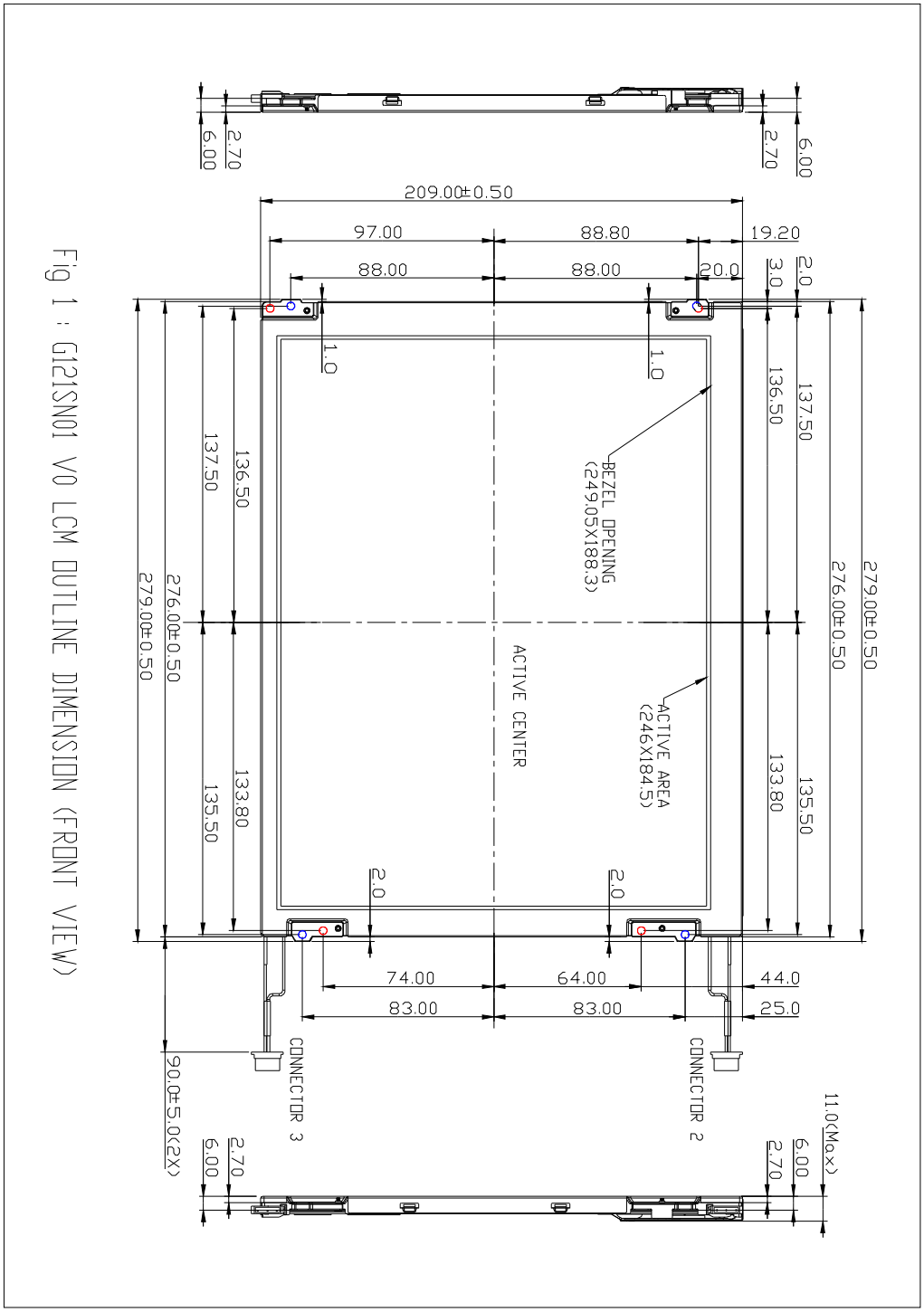

Fig 1 : G121SN01 V0 LCM OUTLINE DIMENSION (FRONT VIEW)

(C) Copyright AU Optroncis, Inc.
2004 All Right Reserved.
No Reproduction and Redistribution Allowed.

13.2 LCM Outline dimension (Rear View)

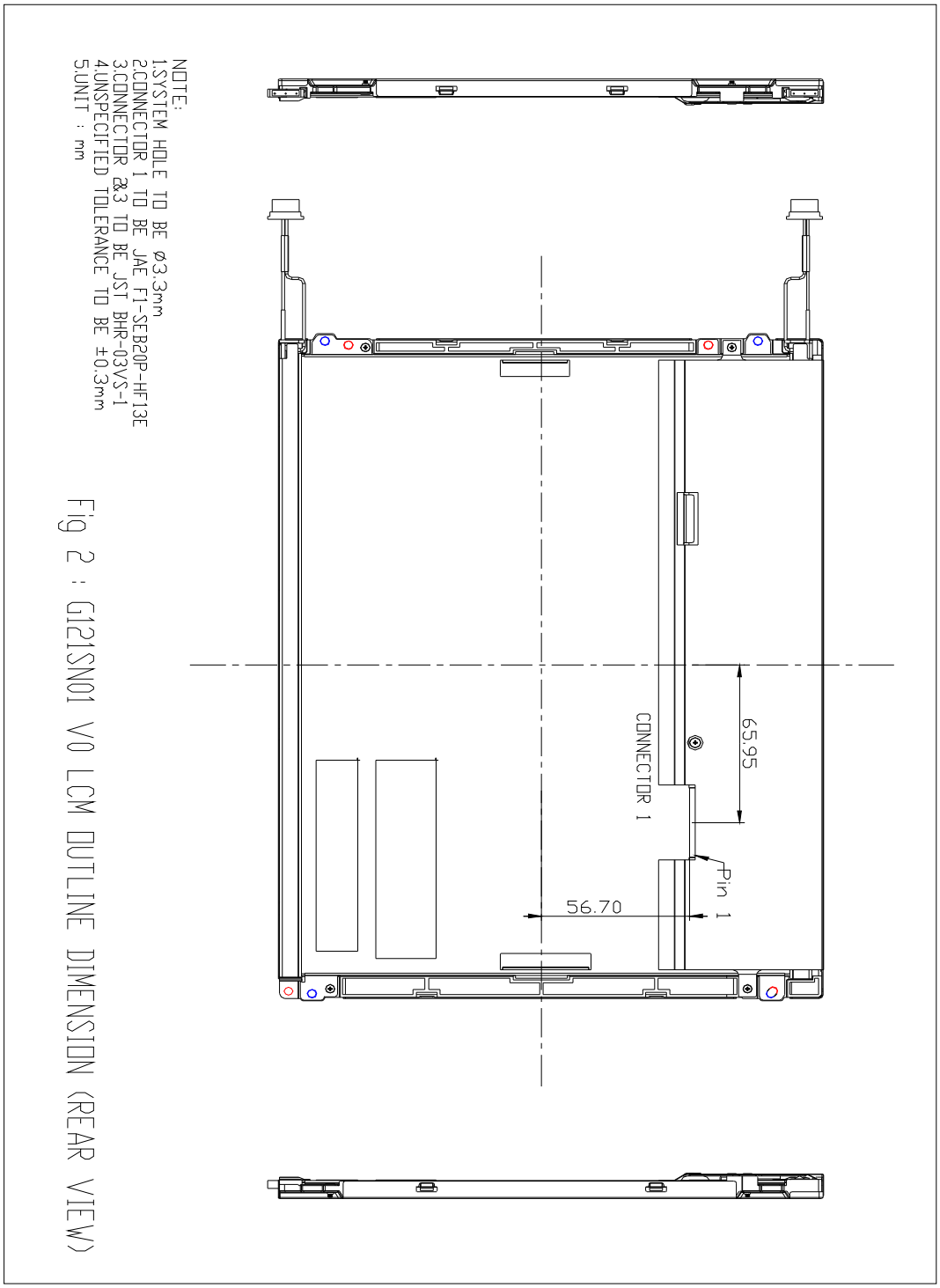

Fig 2 : G121SN01 V0 LCM OUTLINE DIMENSION (REAR VIEW)

(C) Copyright AU Optroncis, Inc.
2004 All Right Reserved.
No Reproduction and Redistribution Allowed.

13.3 Screw Note

TBD

(C) Copyright AU Optroncis, Inc.
2004 All Right Reserved.
No Reproduction and Redistribution Allowed.