(V) Preliminary Specification
( ) Final Specification

Module	19” WXGA+ Color TFT-LCD
Model Name	M190PW01 V0

Customer	Date	Checked & Approved by	Date
		CC Chiu	2006/05/24
Approved by		**Prepared by**	
		AlegWu	2006/05/24
Note: This Specification is subject to change without notice.		Desktop Display Business Group / AU Optronics corporation	

Contents

1. Handling Precautions 5
2. General Description 6
2.1 Display Characteristics 6
3. Functional Block Diagram 10
4. Absolute Maximum Ratings 11
4.1 Absolute Ratings of TFT LCD Module 11
4.2 Absolute Ratings of Backlight Unit 11
4.3 Absolute Ratings of Environment 12
5. Electrical characteristics 13
5.1 TFT LCD Module 13
5.2 Backlight Unit 15
6. Signal Characteristic 16
6.1 Pixel Format Image 16
6.2 The Input Data Format 17
6.4 Interface Timing 20
6.5 Power ON/OFF Sequence 22
7. Connector & Pin Assignment 23
7.1 TFT LCD Module 23
7.2 Backlight Unit 24
8. Reliability Test 25
9. Shipping Label 26
10. Mechanical Characteristics 27

Record of Revision

Version and Date	Page	Old description	New Description	Remark
0.1 2006/04/28	All	First Edition for Customer	All	
0.2 2006/5/18	5	Contrast Ratio: TBD	Contrast Ratio: 800	Modified
	5	Power Consumption: TBD	Power Consumption: 24.04(Typ)	Modified
	5	Support Colors: 16.7M colors(RGB 8-bits)	Support Colors: 16.7M colors(RGB 6-bits+HiFRC)	Collected
	6	Color/Chromaticity: RGBW XY: TBD	Update the value, please see the content.	Modified
	6	Contrast Ratio: TBD	Contrast Ratio: Min:600, Typ:800	Modified
	13	Input Current: TBD	Input Current: Typ:0.8, Max:1.2	Modified
		VDD Power: TBD	VDD Power: Typ:4.0, Max:6.0	Modified
		Inrush Current: TBD	Inrush Current: Max:5	Modified
	15	CCFL Operation Voltage: Typ:720(@6.5mA)	CCFL Operation Voltage: Typ:771(@6.5mA)	Modified
		CCFL Operation Voltage: Max:TBD	CCFL Operation Voltage: Max:848	Modified
		CCFL Power Consumption TBD	CCFL Power Consumption Typ:20.04, Max:22.04	Modified
		CCFL Ignition Voltage(Ta=25℃): 1200	CCFL Ignition Voltage(Ta=25℃): 1250	Modified
		Note5:…capacity for 1500 voltage. Lamp units need 1,500 voltage…	Note5:…capacity for 1,700 voltage. Lamp units need 1,700 voltage…	Collected
	18	RxECLKIN-: Positive LVDS differential clock input (Even clock)	RxECLKIN-: Negative LVDS differential clock input (Even clock)	Collected
		RxECLKIN+: Negative LVDS differential clock input (Even clock)	RxECLKIN+: Positive LVDS differential clock input (Even clock)	Collected

1. Handling Precautions

1) Since front polarizer is easily damaged, pay attention not to scratch it.
2) Be sure to turn off power supply when inserting or disconnecting from input connector.
3) Wipe off water drop immediately. Long contact with water may cause discoloration or spots.
4) When the panel surface is soiled, wipe it with absorbent cotton or other soft cloth.
5) Since the panel is made of glass, it may break or crack if dropped or bumped on hard surface.
6) Since CMOS LSI is used in this module, take care of static electricity and insure human earth when handling.
7) Do not open or modify the Module Assembly.
8) Do not press the reflector sheet at the back of the module to any directions.
9) In case if a Module has to be put back into the packing container slot after once it was taken out from the container, do not press the center of the CCFL reflector edge. Instead, press at the far ends of the CCFL Reflector edge softly. Otherwise the TFT Module may be damaged.
10) At the insertion or removal of the Signal Interface Connector, be sure not to rotate nor tilt the Interface Connector of the TFT Module.
11) After installation of the TFT Module into an enclosure, do not twist nor bend the TFT Module even momentary. At designing the enclosure, it should be taken into consideration that no bending/twisting forces are applied to the TFT Module from outside. Otherwise the TFT Module may be damaged.
12) Cold cathode fluorescent lamp in LCD contains a small amount of mercury. Please follow local ordinances or regulations for disposal.
13) Small amount of materials having no flammability grade is used in the LCD module. The LCD module should be supplied by power complied with requirements of Limited Power Source (IEC60950 or UL1950), or be applied exemption.
14) The LCD module is designed so that the CCFL in it is supplied by Limited Current Circuit (IEC60950 or UL1950). Do not connect the CCFL in Hazardous Voltage Circuit.

2. General Description

This specification applies to the 19 inch-wide Color TFT-LCD Module M190PW01.

The display supports the WXGA+ (1440(H) x 900(V)) screen format and 16.7M colors. All input signals are 2 Channel LVDS interface compatible.

This module does not contain an inverter card for backlight.

.

2.1 Display Characteristics

The following items are characteristics summary on the table under 25 ℃ condition:

Items	Unit	Specifications
Active Area	[mm]	408.24 (H) x 255.15(V)
Pixels H x V		1440x3(RGB) x 900
Pixel Pitch	[mm]	0.2835x 0.2835
Pixel Arrangement		R.G.B. Vertical Stripe
Display Mode		TN Mode,Normally White
White Luminance	[cd/m^2]	300 cd/m2 @ 6.5mA (Typ)
Contrast Ratio		800
Optical ResponseTime	[msec]	5 (Typ, on/off)
Nominal Input Voltage VDD	[Volt]	+5.0 (Typ)
Power Consumption (VDD line + CCFL line)	[Watt]	24.04(Typ)
Weight	[Grams]	2500 (Typ)
Physical Size (H x V x D)	[mm]	428.0(W) x 278.0(H) x 18.5(D) (Typ)
Electrical Interface		Dual Channel LVDS
Surface Treatment		Anti-glare type, Hardness 3H
Support Colors		16.7M colors (RGB 6-bits+HiFRC)
RoHS Compliance		RoHS Compliance

2.2 Optical Characteristics

The optical characteristics are measured under stable conditions at 25℃ (Room Temperature):

Item	Unit	Conditions	Min.	Typ.	Max.	Note
Viewing Angle	[degree]	Horizontal (Right)+ (Left) CR = 10	150	160	-	1
		Vertical (Up) + (Down) CR = 10	150	160	-	
Luminance Uniformity	[%]	9 Points	75	80	-	2, 3
Optical Response Time	[msec]	Rising	-	3.6	5.7	4, 6
		Falling	-	1.4	2.3	
		Rising + Falling	-	5	8	
Color / Chromaticity Coordinates (CIE 1931)		Red x	0.620	0.650	0.680	4
		Red y	0.310	0.340	0.370	
		Green x	0.260	0.290	0.320	
		Green y	0.580	0.610	0.640	
		Blue x	0.120	0.150	0.180	
		Blue y	0.040	0.070	0.100	
		White x	0.283	0.313	0.343	
		White y	0.299	0.329	0.359	
White Luminance (At CCFL= 6.5mA)	[cd/m^2]		250	300	-	4
Contrast Ratio			600	800	-	4
Cross Talk (At 75Hz)	[%]		-	-	1.5	5
Flicker	[dB]		-	-	-20	7

Optical Equipment: BM-5A, BM-7, PR880, or equivalent

Note 1: Definition of viewing angle

Viewing angle is the measurement of contrast ratio ≧10, at the screen center, over a 180° horizontal and 180° vertical range (off-normal viewing angles). The 180° viewing angle range is broken down as follows; 90° (θ) horizontal left and right and 90° (Φ) vertical, high (up) and low (down). The measurement direction is typically perpendicular to the display surface with the screen rotated about its center to develop the desired measurement viewing angle.

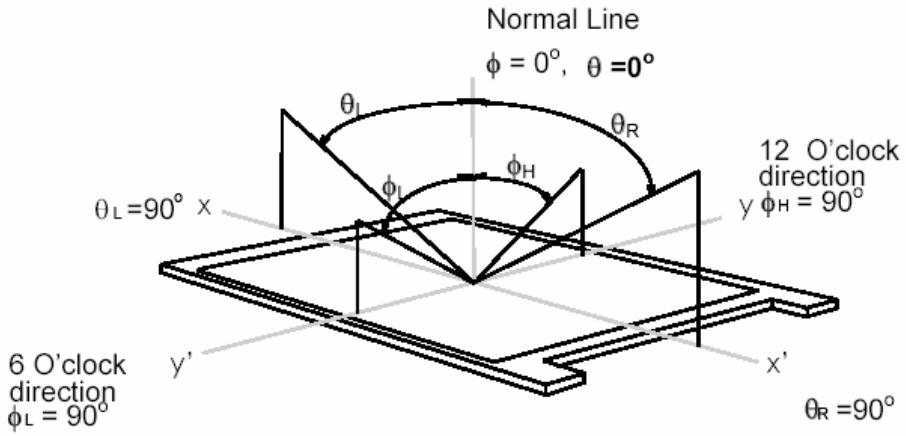

Note 2: 9 points position

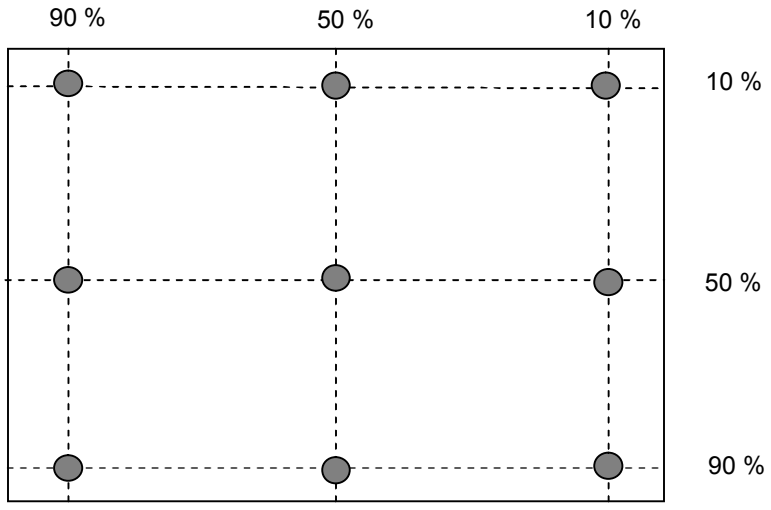

Note 3: The luminance uniformity of 9 points is defined by dividing the maximum luminance values by the minimum test point luminance

$$\delta_{W9} = \frac{\text{Minimum Luminance of 9 points}}{\text{Maximum Luminance of 9 points}}$$

Note 4: Measurement method

The LCD module should be stabilized at given temperature for 30 minutes to avoid abrupt temperature change during measuring. In order to stabilize the luminance, the measurement should be executed after lighting Backlight for 30 minutes in a stable, windless and dark room.

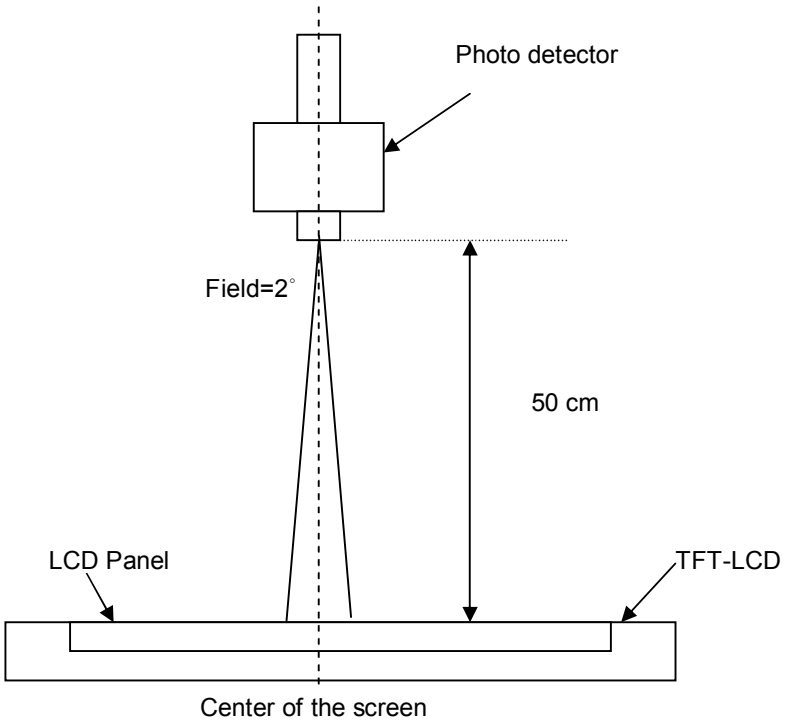

Note 5: Definition of Cross Talk (CT)

CT = | YB – YA | / YA × 100 (%)

Where

YA = Luminance of measured location without gray level 0 pattern (cd/m2)

YB = Luminance of measured location with gray level 0 pattern (cd/m2)

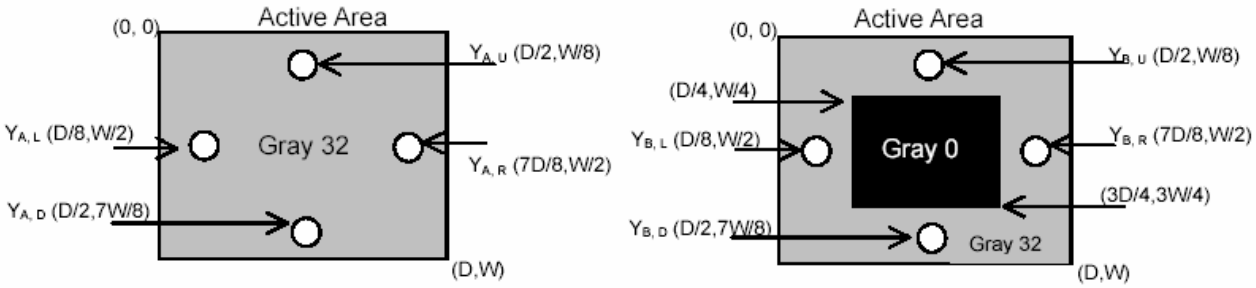

Note 6: Definition of response time:

The output signals of photo detector are measured when the input signals are changed from “Full Black” to “Full White” (rising time), and from “Full White” to “Full Black ”(falling time), respectively. The response time is interval between the 10% and 90% of amplitudes. Please refer to the figure as below.

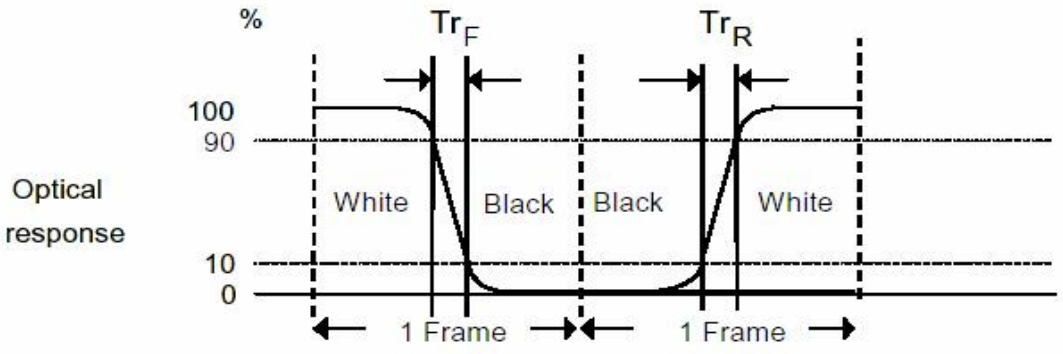

Note 7: Subchecker Pattern

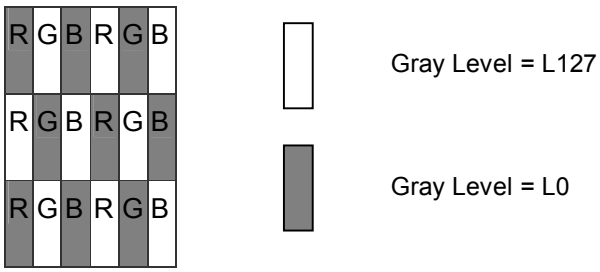

Method: Record dBV & DC value with (WESTAR)TRD-100

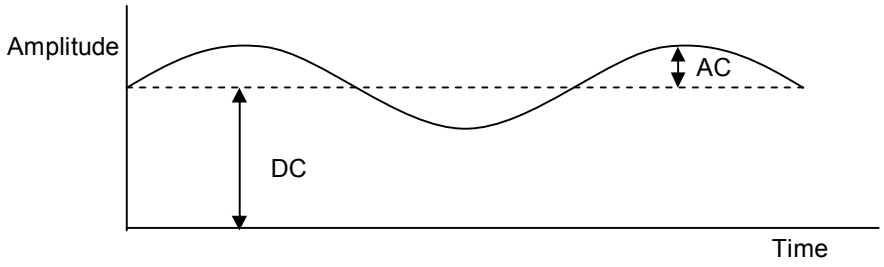

$$\text{Flicker (dB)} = 20\log\frac{\text{AC Level(at 30 Hz)}}{\text{DC Level}}$$

3. Functional Block Diagram

The following diagram shows the functional block of the 19.0 inches wide Color TFT-LCD Module:

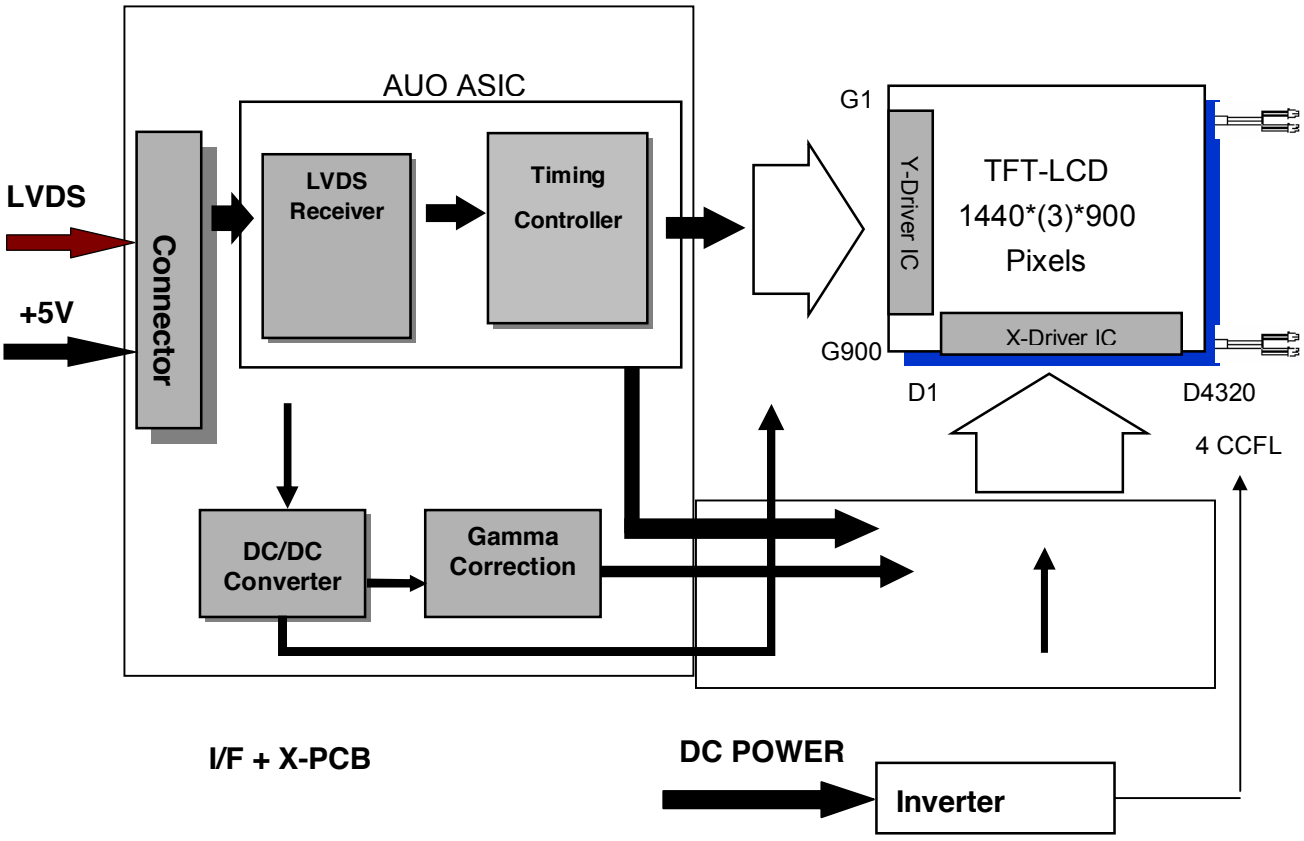

JAE FI-XB30SSL-HF15
Mating Type: FI-X30HL-T

YEON HO 35001HS-02L
Mating Type: 35001WR-02LP

4. Absolute Maximum Ratings

Absolute maximum ratings of the module is as following:

4.1 Absolute Ratings of TFT LCD Module

Item	Symbol	Min.	Max.	Unit	Conditions
Logic/LCD Drive Voltage	VDD	-0.3	+5.5	[Volt]	Note 1, 2

4.2 Absolute Ratings of Backlight Unit

Item	Symbol	Min.	Max.	Unit	Conditions
CCFL Current	ICFL	-	8	[mA] rms	Note 1, 2

4.3 Absolute Ratings of Environment

Item	Symbol	Min.	Max.	Unit	Conditions
Operating Temperature	TOP	0	+50	[°C]	Note 3
Operation Humidity	HOP	5	90	[%RH]	
Storage Temperature	TST	-20	+60	[°C]	
Storage Humidity	HST	8	90	[%RH]	

Note 1: With in Ta= 25℃

Note 2: Permanent damage to the device may occur if exceed maximum values

Note 3: For quality performance, please refer to AUO IIS (Incoming Inspection Standard).

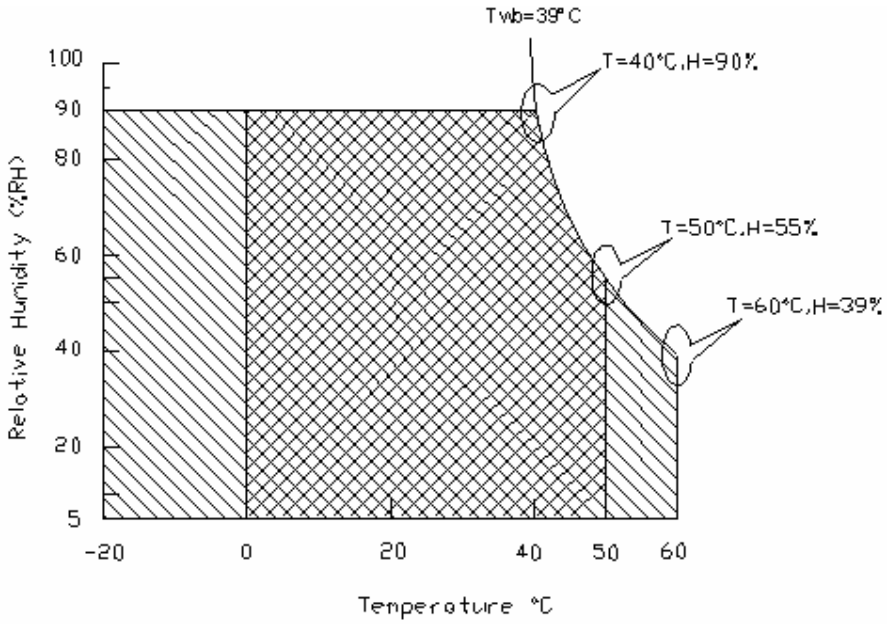

Operating Range Storage Range +

5. Electrical characteristics

5.1 TFT LCD Module

5.1.1 Power Specification

Input power specifications are as follows:

Symble	Parameter	Min.	Typ.	Max.	Unit	Condition
VDD	Logic/LCD Drive Voltage	4.5	5.0	5.5	[Volt]	
IDD	Input Current	-	0.8	1.2	[A]	VDD= 5.0V, All Black Pattern At 75Hz
PDD	VDD Power	-	4.0	6.0	[Watt]	VDD= 5.0V, All Black Pattern At 75Hz , Note 1
IRush	Inrush Current	-	-	5	[A]	Note 2

Note 1: The variance of VDD power consumption is ±10%.

Note 2: Measurement conditions:

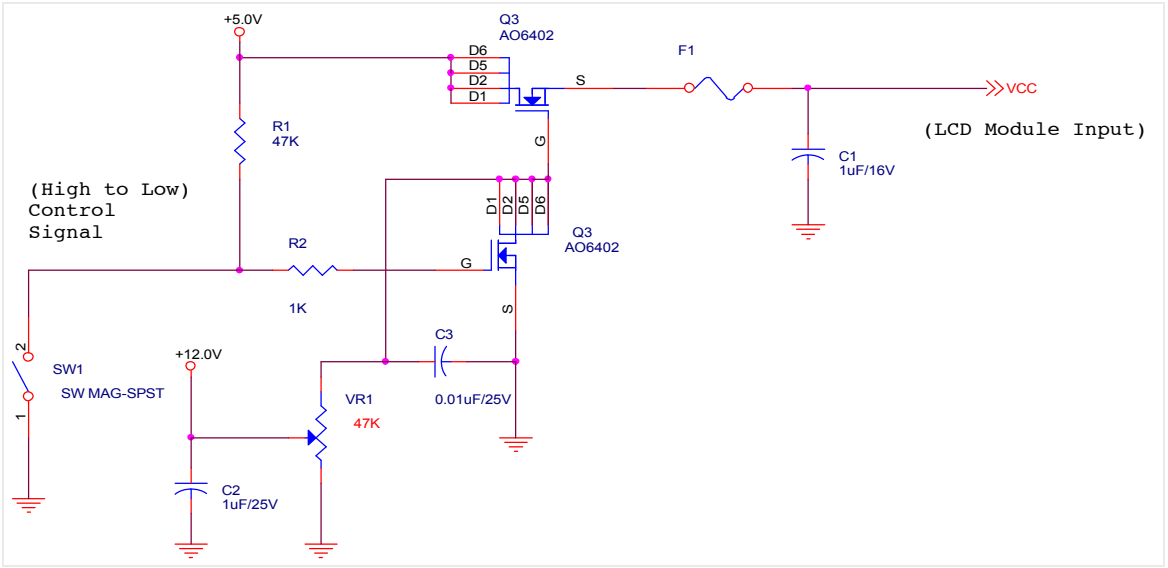

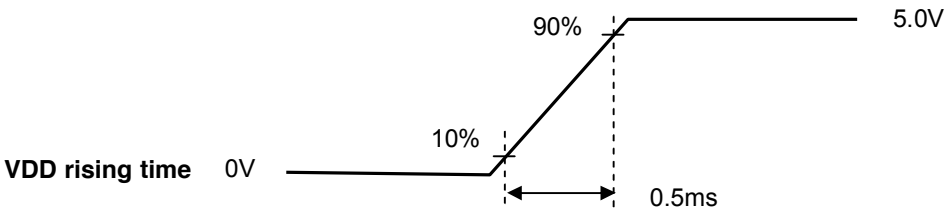

5.1.2 Signal Electrical Characteristics

Input signals shall be low or Hi-Z state when Vin is off
It is recommended to refer the specifications of SN75LVDS82DGG (Texas Instruments) in detail.

Each signal characteristics are as follows;

Symbol	Parameter	Min	Typ	Max	Units	Condition	
VTH	Differential Input High Threshold	-	-	100	[mV]	VICM = 1.2V	***Note***
VTL	Differential Input Low Threshold	-100	-	-	[mV]	VICM = 1.2V	***Note***
| VID |	Input Differential Voltage	100	400	600	[mV]		***Note***
VICM	Differential Input Common Mode Voltage	1.0	1.2	1.5	[V]	VTH/VTL = ± 100mV	***Note***

Note: LVDS Signal Waveform

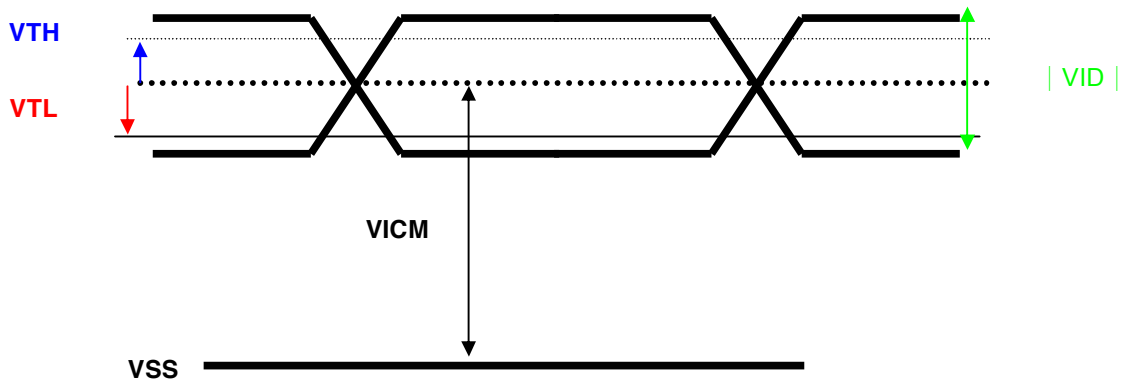

5.2 Backlight Unit

Parameter guideline for CCFL Inverter is under stable conditions at 25℃ (Room Temperature):

Parameter	Min.	Typ.	Max.	Unit	Condition
CCFL Standard Current(ISCFL)	6.0	6.5	7.0	[mA] rms	Note 2
CCFL Operation Current(IRCFL)	3.0	6.5	8.0	[mA] rms	Note 2
CCFL Frequency(FCFL)	40	50	80	[KHz]	Note 3,4
CCFL Ignition Voltage(ViCFL, Ta= 0℃)	1700	-	-	[Volt] rms	Note 5
CCFL Ignition Voltage(ViCF, Ta= 25℃)	1250	-	-	[Volt] rms	
CCFL Operation Voltage (VCFL)	-	771 (@ 6.5mA)	848	[Volt] rms	Note 6
CCFL Power Consumption(PCFL)	-	20.04	22.04	[Watt]	Note 6
CCFL Life Time(LTCFL)	40,000	50,000	-	[Hour]	

Note 1: Typ. are AUO recommended design points.

*1 All of characteristics listed are measured under the condition using the AUO test inverter.

*2 In case of using an inverter other than listed, it is recommended to check the inverter carefully. Sometimes, interfering noise stripes appear on the screen, and substandard luminance or flicker at low power may happen.

*3 In designing an inverter, it is suggested to check safety circuit very carefully. Impedance of CCFL, for instance, becomes more than 1 [M ohm] when CCFL is damaged.

*4 Generally, CCFL has some amount of delay time after applying kick-off voltage. It is recommended to keep on applying kick-off voltage for 1 [Sec] until discharge.

*5 Reducing CCFL current increases CCFL discharge voltage and generally increases CCFL discharge frequency. So all the parameters of an inverter should be carefully designed so as not to produce too much leakage current from high-voltage output of the inverter.

Note 2: It should be employed the inverter which has “Duty Dimming”, if IRCFL is less than 4mA.

Note 3: CCFL discharge frequency should be carefully determined to avoid interference between inverter and TFT LCD.

Note 4: The frequency range will not affect to lamp life and reliability characteristics.

Note 5: CCFL inverter should be able to give out a power that has a generating capacity of over 1,700 voltage. Lamp units need 1,700 voltage minimum for ignition.

Note 6: The variance of CCFL power consumption is ±10%. Calculator value for reference (ISCFL × VCFL × 4 = PCFL)

6. Signal Characteristic

6.1 Pixel Format Image

Following figure shows the relationship of the input signals and LCD pixel format.

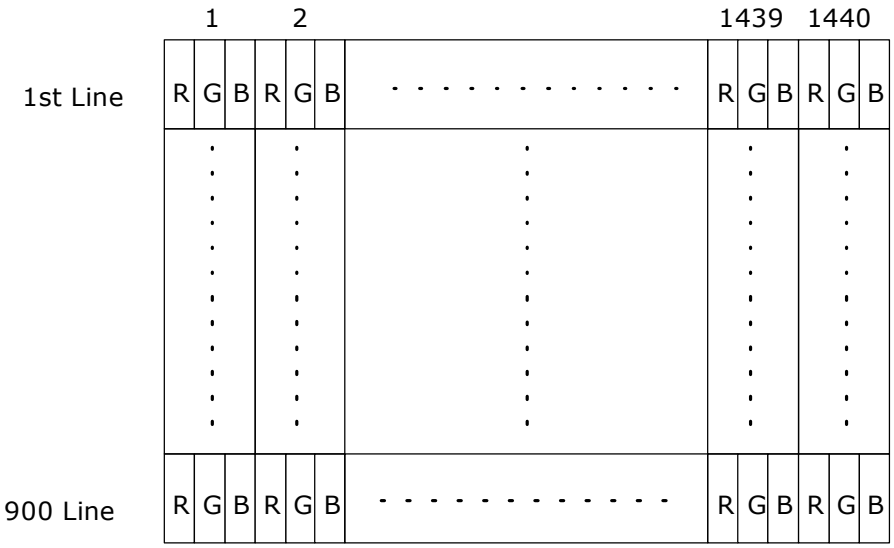

6.2 The Input Data Format

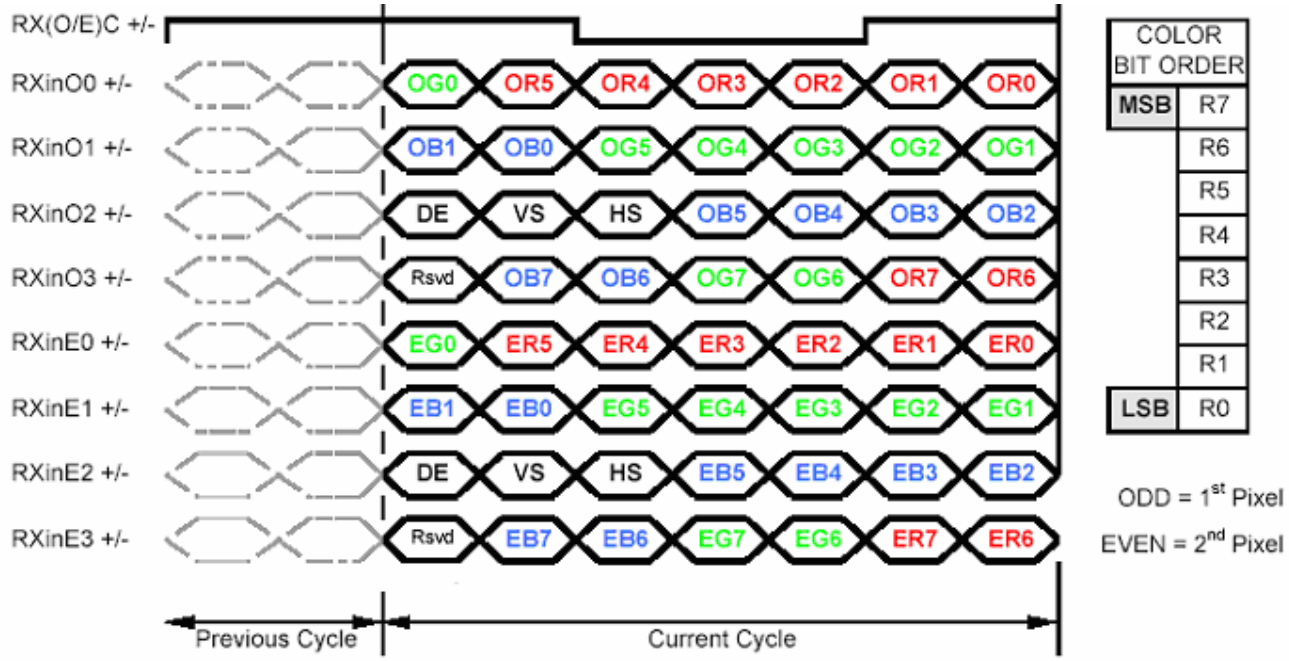

Note1: Normally, DE, VS, HS on EVEN channel are not used.
Note2: 8-bits signal input.

6.3 Signal Description

The module using a pair of LVDS receiver SN75LVDS82(Texas Instruments) or compatible. LVDS is a differential signal technology for LCD interface and high speed data transfer device. Transmitter shall be SN75LVDS83(negative edge sampling) or compatible**.** The first LVDS port(RxOxxx) transmits odd pixels while the second LVDS port(RxExxx) transmits even pixels.

PIN #	SIGNAL NAME	DESCRIPTION
1	RxOIN0-	Negative LVDS differential data input (Odd data)
2	RxOIN0+	Positive LVDS differential data input (Odd data)
3	RxOIN1-	Negative LVDS differential data input (Odd data)
4	RxOIN1+	Positive LVDS differential data input (Odd data)
5	RxOIN2-	Negative LVDS differential data input (Odd data, H-Sync,V-Sync,DSPTMG)
6	RxOIN2+	Positive LVDS differential data input (Odd data, H-Sync,V-Sync,DSPTMG)
7	GND	Power Ground
8	RxOCLKIN-	Negative LVDS differential clock input (Odd clock)
9	RxOCLKIN+	Positive LVDS differential clock input (Odd clock)
10	RxOIN3-	Negative LVDS differential data input (Odd data)
11	RxOIN3+	Positive LVDS differential data input (Odd data)
12	RxEIN0-	Negative LVDS differential data input (Even data)
13	RxEIN0+	Positive LVDS differential data input (Even data)
14	GND	Power Ground
15	RxEIN1-	Negative LVDS differential data input (Even data)
16	RxEIN1+	Positive LVDS differential data input (Even data)
17	GND	Power Ground
18	RxEIN2-	Negative LVDS differential data input (Even data)
19	RxEIN2+	Positive LVDS differential data input (Even data)
20	RxECLKIN-	Negative LVDS differential clock input (Even clock)
21	RxECLKIN+	Positive LVDS differential clock input (Even clock)
22	RxEIN3-	Negative LVDS differential data input (Even data)
23	RxEIN3+	Positive LVDS differential data input (Even data)
24	GND	Power Ground
25	NC	No contact (For AUO test only)
26	NC	No contact (For AUO test only)
27	NC	No contact (For AUO test only)
28	VCC	+5.0V Power Supply
29	VCC	+5.0V Power Supply
30	VCC	+5.0V Power Supply

Note1: Start from left side

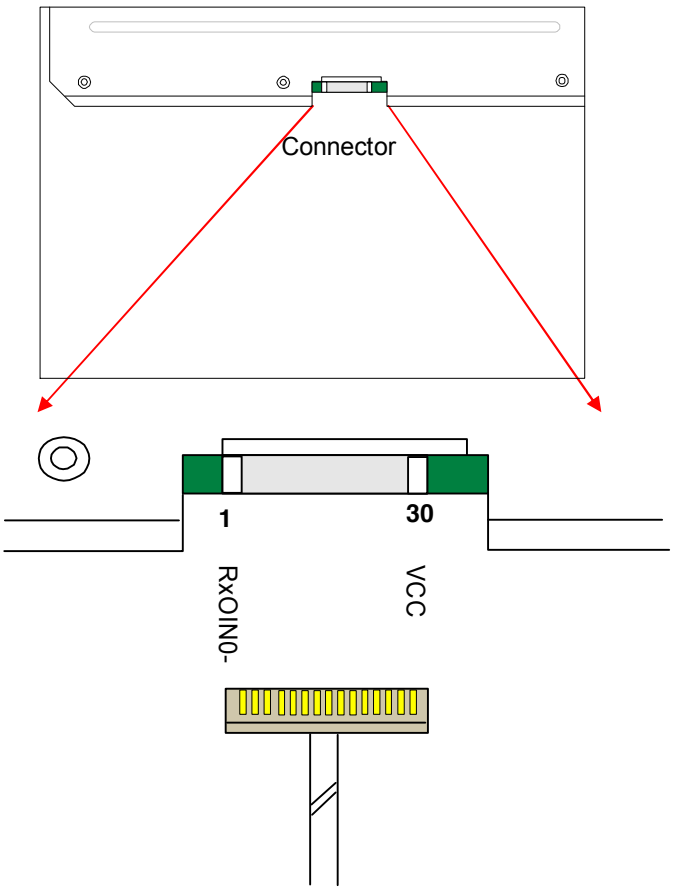

Note2: Input signals of odd and even clock shall be the same timing.

Note3: Please follow PSWG.

6.4 Interface Timing

6.4.1 Timing Characteristics

Signal	Item	Symbol	Min	Typ	Max	Unit
Vertical Section	Period	Tv	910	916	2048	Th
	Active	Tdisp(v)	900	900	900	Th
	Blanking	Tbp(v)+Tfp(v)+PWvs	10	16	1148	Th
Horizontal Section	Period	Th	760	864	2048	Tclk
	Active	Tdisp(h)	720	720	720	Tclk
	Blanking	Tbp(h)+Tfp(h)+PWhs	40	144	1328	Tclk
Clock	Period	Tclk	22.2	21.1	15.4	ns
	Frequency	Freq	45	47.5	64	MHz
Frame rate	Frame rate	F	55	60	76	Hz

Note : DE mode only

6.4.2 Timing Digram

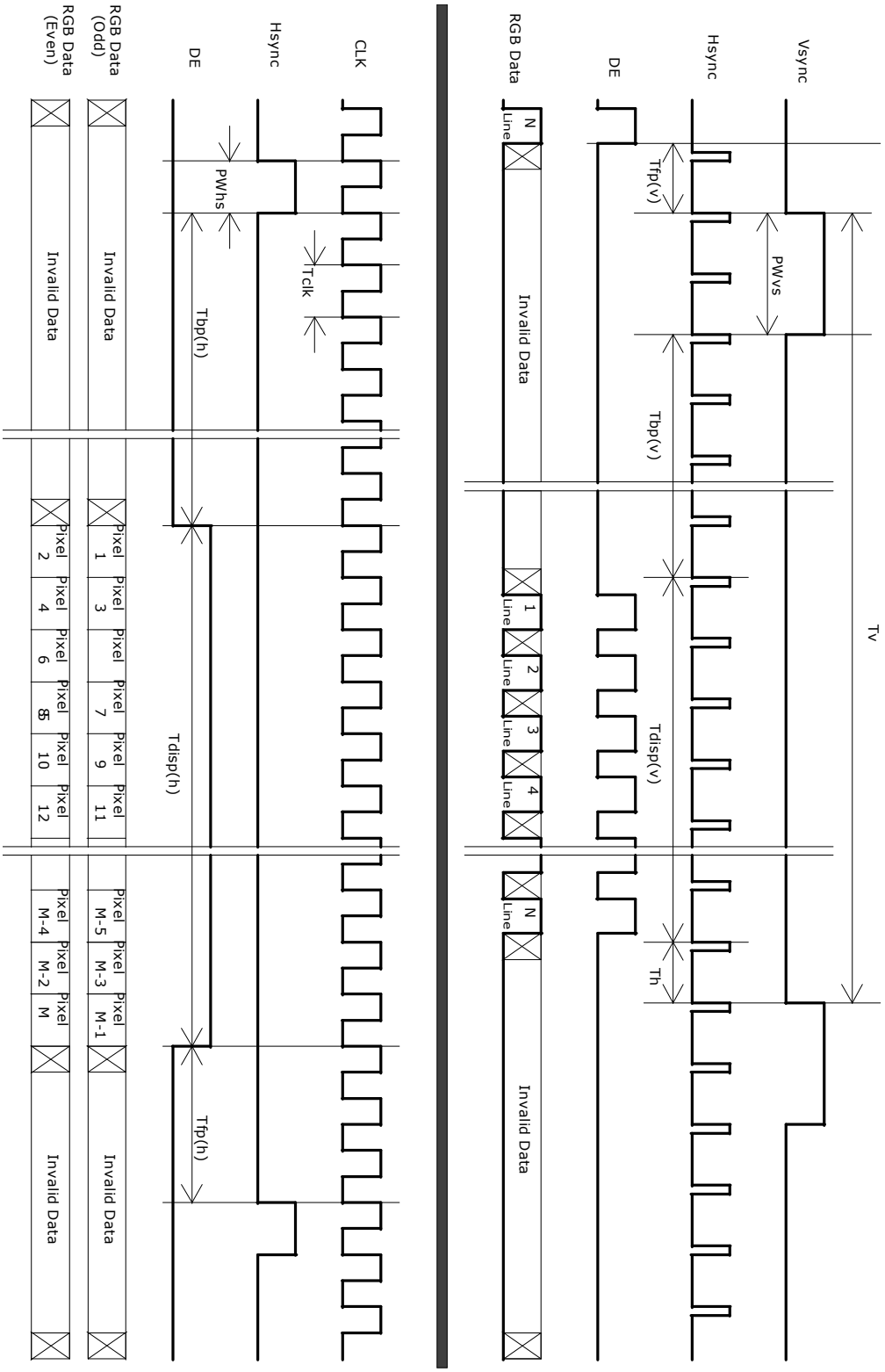

6.5 Power ON/OFF Sequence

VDD power and lamp on/off sequence is as follows. Interface signals are also shown in the chart. Signals from any system shall be Hi-Z state or low level when VDD is off.

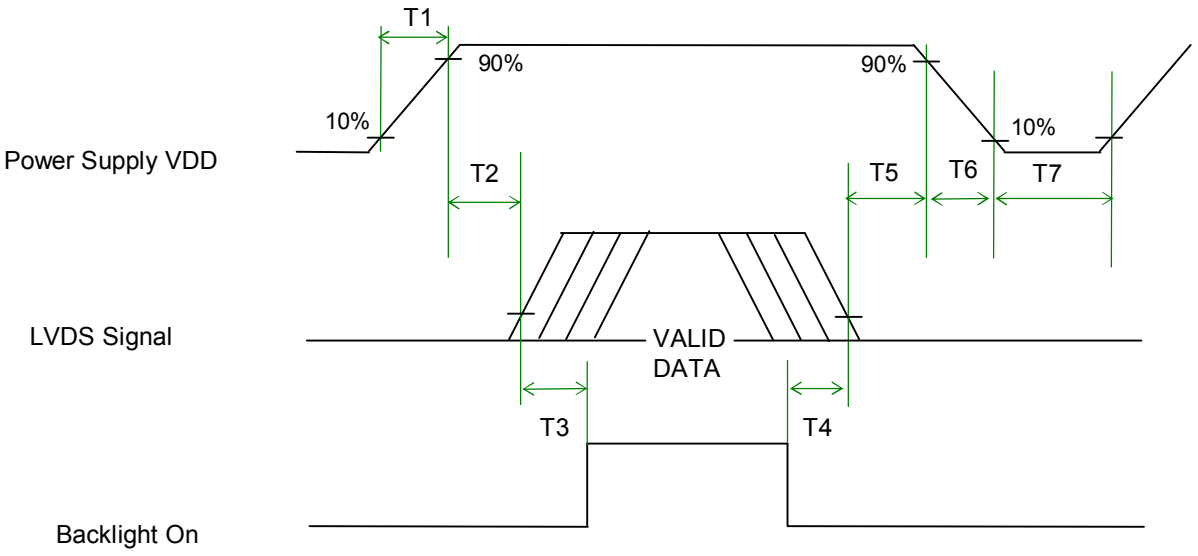

Power Sequence Timing

Parameter	Value			Unit
	Min.	Typ.	Max.	
T1	0.5	-	10	[ms]
T2	0	40	50	[ms]
T3	200	-	-	[ms]
T4	200	-	-	[ms]
T5	0.5	16	50	[ms]
T6	-	-	100	[ms]
T7	1000	-	-	[ms]

7. Connector & Pin Assignment

Physical interface is described as for the connector on module.These connectors are capable of accommodating the following signals and will be following components.

7.1 TFT LCD Module

7.1.1 Connector

Connector Name / Designation	Interface Connector / Interface card
Manufacturer	JAE or compatible
Type Part Number	FI-XB30SSL-HF15
Mating Housing Part Number	FI-X30HL-T (Locked Type) FI-X30S-H (Unlocked Type) or equivalent

7.1.2 Pin Assignment

Pin#	Signal Name	Pin#	Signal Name
1	RxOIN0-	2	RxOIN0+
3	RxOIN1-	4	RxOIN1+
5	RxOIN2-	6	RxOIN2+
7	GND	8	RxOCLKIN-
9	RxOCLKIN+	10	RxOIN3-
11	RxOIN3+	12	RxEIN0-
13	RxEIN0+	14	GND
15	RxEIN1-	16	RxEIN1+
17	GND	18	RxEIN2-
19	RxEIN2+	20	RxECLKIN-
21	RxECLKIN+	22	RxEIN3-
23	RxEIN3+	24	GND
25	NC	26	NC
27	NC	28	VCC
29	VCC	30	VCC

7.2 Backlight Unit

Physical interface is described as for the connector on module. These connectors are capable of accommodating the following signals and will be following components.

Connector Name / Designation	Lamp Connector / Backlight lamp
Manufacturer	YEON HO
Type Part Number	35001HS-02L
Mating Type Part Number	35001WR-02LP or equivalent

7.2.1 Signal for Lamp connector

	Connector No.	Pin No.	Input	Color	Function
Upper	CN1	1	Hot1	Blue	High Voltage (Lamp 1)
		2	Cold1	Black	Low Voltage (Lamp 1)
	CN2	1	Hot2	Pink	High Voltage (Lamp 2)
		2	Cold2	White	Low Voltage (Lamp 2)

	Connector No.	Pin No.	Input	Color	Function
Lower	CN3	1	Hot1	Blue	High Voltage (Lamp 3)
		2	Cold1	Black	Low Voltage (Lamp 3)
	CN4	1	Hot2	Pink	High Voltage (Lamp 4)
		2	Cold2	White	Low Voltage (Lamp 4)

8. Reliability Test

Environment test conditions are listed as following table.

Items	Required Condition	Note
Temperature Humidity Bias (THB)	Ta= 50℃, 80%RH, 300hours	
High Temperature Operation (HTO)	Ta= 50℃, 50%RH, 300hours	
Low Temperature Operation (LTO)	Ta= 0℃, 300hours	
High Temperature Storage (HTS)	Ta= 60℃, 300hours	
Low Temperature Storage (LTS)	Ta= -20℃, 300hours	
Vibration Test (Non-operation)	Acceleration: 1.5 G Wave: Random Frequency: 10 - 200 - 10 Hz Sweep: 30 Minutes each Axis (X, Y, Z)	
Shock Test (Non-operation)	Acceleration: 50 G Wave: Half-sine Active Time: 20 ms Direction: ±X, ±Y, ±Z (one time for each Axis)	
Drop Test	Height: 60 cm, package test	
Thermal Shock Test (TST)	-20℃/30min, 60℃/30min, 100 cycles	1
On/Off Test	On/10sec, Off/10sec, 30,000 cycles	
ESD (ElectroStatic Discharge)	Contact Discharge: ± 8KV, 150pF(330Ω) 1sec, 8 points, 25 times/ point.	2
	Air Discharge: ± 15KV, 150pF(330Ω) 1sec 8 points, 25 times/ point.	
Altitude Test	Operation:10,000 ft Non-Operation:30,000 ft	

Note 1: The TFT-LCD module will not sustain damage after being subjected to 100 cycles of rapid temperature change. A cycle of rapid temperature change consists of varying the temperature from -20℃ to 60℃, and back again. Power is not applied during the test. After temperature cycling, the unit is placed in normal room ambient for at least 4 hours before power on.

Note 2: According to EN61000-4-2 , ESD class B: Some performance degradation allowed. No data lost. Self-recoverable. No hardware failures.

9. Shipping Label

The shipping label format is shown as below.
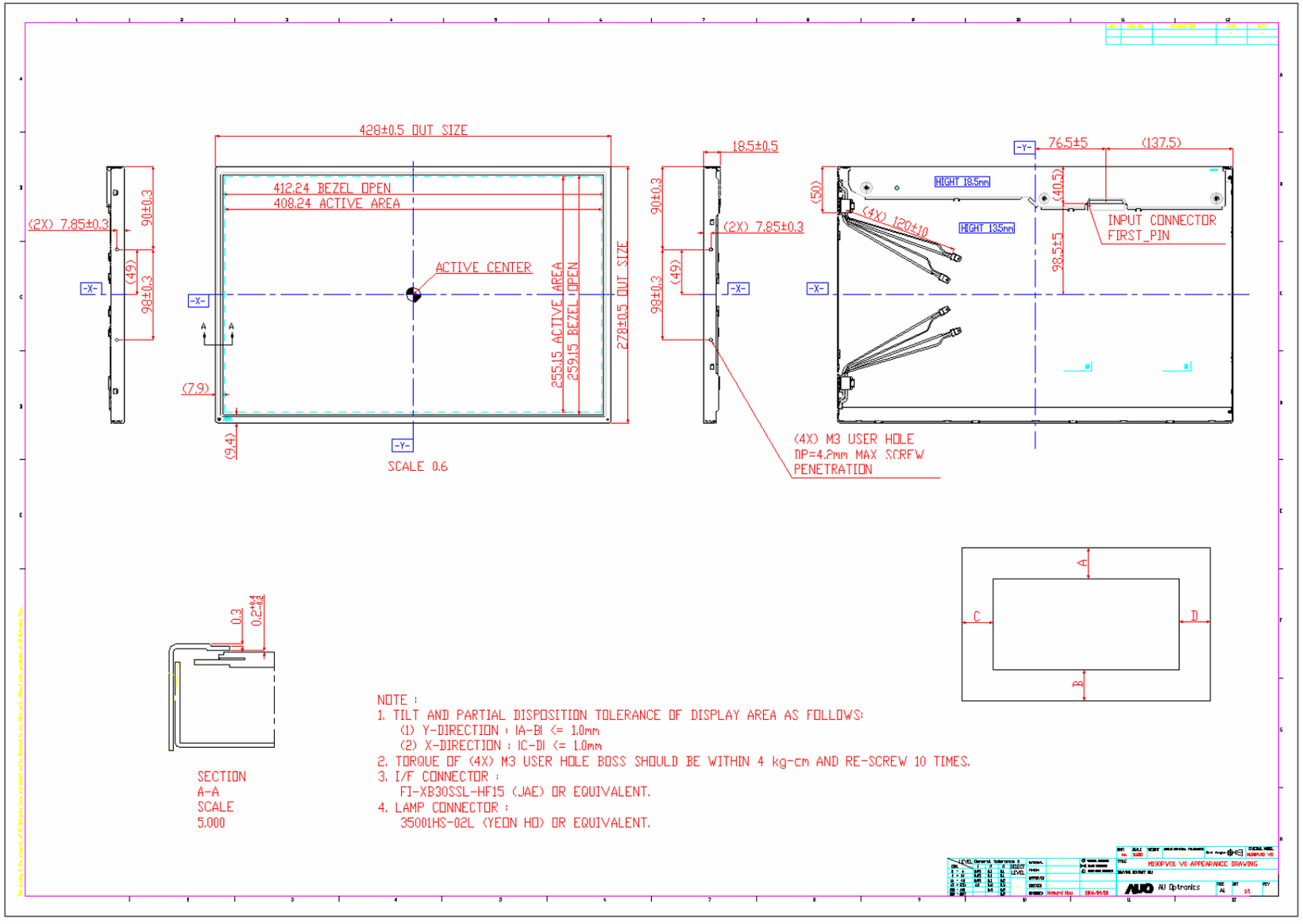
10. Mechanical Characteristics