( ) Preliminary Specification
(V) Final Specification

Module	19" WXGA+ Color TFT-LCD
Model Name	M190PW01 V6

Customer	**Date**
Approved by	
Approved by	**Date**
Prepared by	**Date**
Trista Jiang	March 25, 2010

Note: This Specification is subject to change without notice.

Desktop Display Business Group / AU Optronics corporation

Contents

1.0 Handling Precautions 4
2.0 General Description 5
2.1 Display Characteristics 5
2.2 Optical Characteristics 6
3.0 Functional Block Diagram 10
4.0 Absolute Maximum Ratings 11
4.1 TFT LCD Module 11
4.2 Backlight Unit 11
4.3 Absolute Ratings of Environment 11
5.0 Electrical characteristics 12
5.1 TFT LCD Module 12
5.1.1 Power Specification 12
5.1.2 Signal Electrical Characteristics 13
5.2 Backlight Unit 14
6.0 Signal Characteristic 16
6.1 Pixel Format Image 16
6.2 The input data format 16
6.3 Signal Description 17
6.4 Timing Characteristics 19
6.5 Timing diagram 20
6.6 Power ON/OFF Sequence 21
7.0 Connector & Pin Assignment 22
7.1 TFT LCD Module 22
7.1.1 Pin Assignment 22
7.2 Backlight Unit 23
7.2.1 Signal for Lamp connector 23
8.0 Reliability Test 24
9.0 Shipping Label 25
10.0 Mechanical Characteristics 26

Record of Revision

Version and Date	Page	Old description	New Description	Remark
0.1 2010/01/29	All	First Edition for Customer	N/A	
1.0 2010/03/25	All	Fianl Spec for Customer	N/A	
1.1 2010/05/13	12	Correct Power Specification table 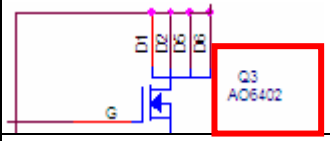	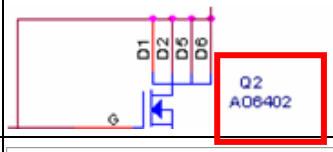	
1.1 2010/05/13	13	Update LVDS Signal Waveform 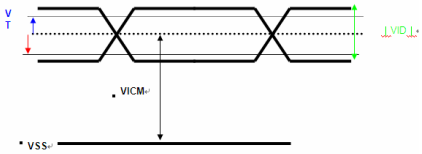	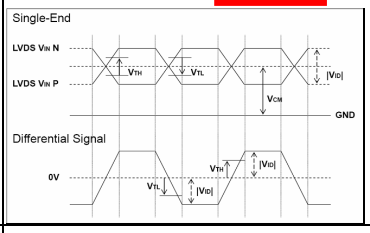	
1.1 2010/05/13	14	CCFL Life time, min: 40000hrs 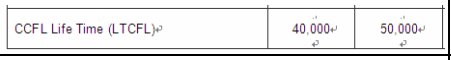	CCFL Life time: minimum = 50000 hrs 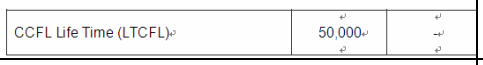	
1.1 2010/05/13	21	Update Power ON/OFF Sequence 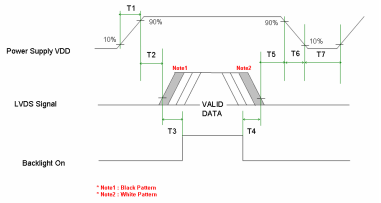	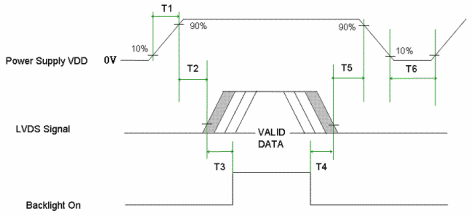	

1.0 Handling Precautions

1) Since front polarizer is easily damaged, pay attention not to scratch it.
2) Be sure to turn off power supply when inserting or disconnecting from input connector.
3) Wipe off water drop immediately. Long contact with water may cause discoloration or spots.
4) When the panel surface is soiled, wipe it with absorbent cotton or other soft cloth.
5) Since the panel is made of glass, it may break or crack if dropped or bumped on hard surface.
6) Since CMOS LSI is used in this module, take care of static electricity and insure human earth when handling.
7) Do not open or modify the Module Assembly.
8) Do not press the reflector sheet at the back of the module to any directions.
9) In case if a Module has to be put back into the packing container slot after once it was taken out from the container, do not press the center of the CCFL reflector edge. Instead, press at the far ends of the CCFL Reflector edge softly. Otherwise the TFT Module may be damaged.
10) At the insertion or removal of the Signal Interface Connector, be sure not to rotate nor tilt the Interface Connector of the TFT Module.
11) After installation of the TFT Module into an enclosure, do not twist nor bend the TFT Module even momentary. At designing the enclosure, it should be taken into consideration that no bending/twisting forces are applied to the TFT Module from outside. Otherwise the TFT Module may be damaged.
12) Cold cathode fluorescent lamp in LCD contains a small amount of mercury. Please follow local ordinances or regulations for disposal.
13) Small amount of materials having no flammability grade is used in the LCD module. The LCD module should be supplied by power complied with requirements of Limited Power Source (IEC60950 or UL1950), or be applied exemption.
14) The LCD module is designed so that the CCFL in it is supplied by Limited Current Circuit (IEC60950 or UL1950). Do not connect the CCFL in Hazardous Voltage Circuit.

2.0 General Description

This specification applies to the 19 inch-wide Color TFT-LCD Module M190PW01.

The display supports the WXGA+ (1440(H) x 900(V)) screen format and 16.7M colors(RGB 6-bits+HiFRC). All input signals are 2-Channel LVDS interface compatible. This module does not contain an inverter board for backlight.

2.1 Display Characteristics

The following items are characteristics summary on the table under 25□ condition:

ITEMS	Unit	SPECIFICATIONS
Screen Diagonal	[mm]	481.4(18.9”)
Active Area	[mm]	408.24 (H) x 255.15(V)
Pixels H x V		1440x3(RGB) x 900
Pixel Pitch	[um]	283.5 (per one triad) ×283.5
Pixel Arrangement		R.G.B. Vertical Stripe
Display Mode		TN Mode, Normally White
White Luminance (Center)	[cd/m^2]	250 cd/m^2 (Typ.)
Contrast Ratio		1000 (Typ.)
Optical Response Time	[msec]	5ms (Typ., on/off)
Nominal Input Voltage VDD	[Volt]	+5.0 V
Power Consumption (VDD line + CCFL line)	[Watt]	15.5W (Typ) (without inverter, all black pattern)
Weight	[Grams]	2210 (Typ)
Physical Size	[mm]	428.0(W) x 278.0(H) x 16.5(D) (Typ)
Electrical Interface		Dual channel LVDS
Support Color		16.7M colors (RGB 6-bit + Hi_FRC)
Surface Treatment		Anti-Glare, 3H
Temperature Range Operating Storage (Shipping)	 [^{o}C] [^{o}C]	 0 to +50 -20 to +60
RoHS Compliance		RoHS Compliance

2.2 Optical Characteristics

The optical characteristics are measured under stable conditions at 25□:

Item	Unit	Conditions	Min.	Typ.	Max.	Note
Viewing Angle	[degree]	Horizontal (Right) CR = 10 (Left)	140	170	- -	2
		Vertical (Up) CR = 10 (Down)	140	160	- -	
Contrast ratio		Normal Direction	600	1000	-	3
Response Time	[msec]	Raising Time (T_{rR})	-	3.6	5.7	4
		Falling Time (T_{rF})	-	1.4	2.3	
		Raising + Falling	-	5	8	
		Gray to Gray(16x16 avg.)	-	-	-	
Color / Chromaticity Coordinates (CIE)		Red x	0.617	0.647	0.677	5
		Red y	0.308	0.338	0.368	
		Green x	0.260	0.290	0.320	
		Green y	0.564	0.594	0.624	
		Blue x	0.115	0.145	0.175	
		Blue y	0.037	0.067	0.097	
Color Coordinates (CIE) White		White x	0.283	0.313	0.343	
		White y	0.299	0.329	0.359	
Central Luminance	[cd/m^2]		200	250	-	6
Luminance Uniformity	[%]		75	80	-	7
Crosstalk (in 75 Hz)	[%]				1.5	8
Flicker	dB				-20	9

***Note 1:* Measurement method**

The LCD module should be stabilized at given temperature for 30 minutes to avoid abrupt temperature change during measuring (at surface 35□). In order to stabilize the luminance, the measurement should be executed after lighting Backlight for 30 minutes in a stable, windless and dark room.

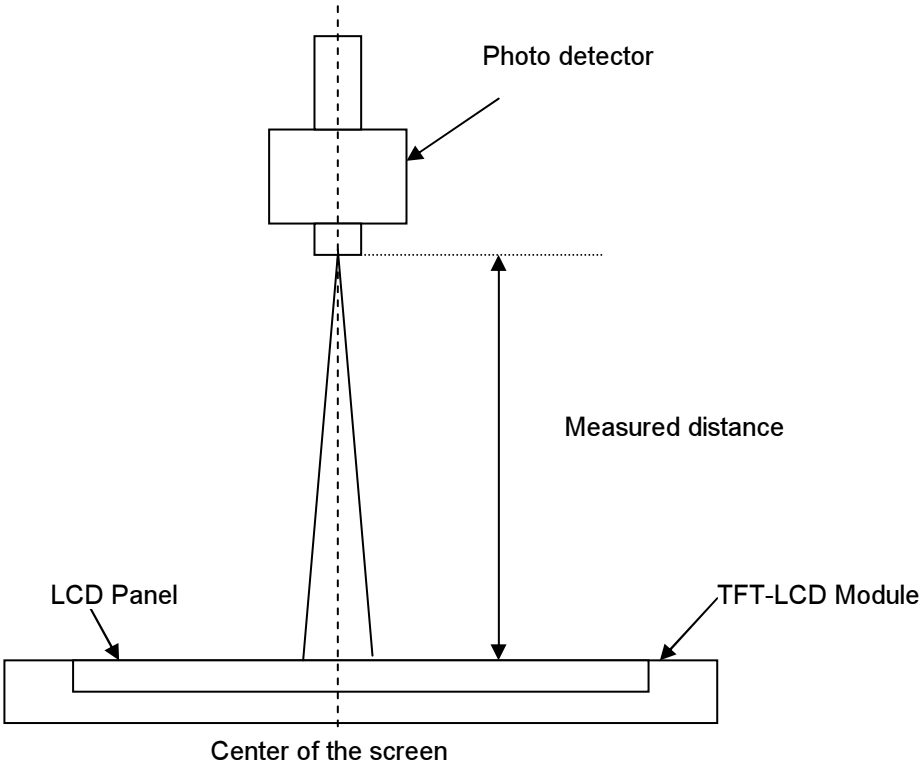

***Note 2:* Definition of viewing angle** measured by ELDIM (EZContrast 88)

Viewing angle is the measurement of contrast ratio ≧10, at the screen center, over a 180° horizontal and 180° vertical range (off-normal viewing angles). The 180° viewing angle range is broken down as follows; 90° (θ) horizontal left and right and 90° (Φ) vertical, high (up) and low (down). The measurement direction is typically perpendicular to the display surface with the screen rotated about its center to develop the desired measurement viewing angle.

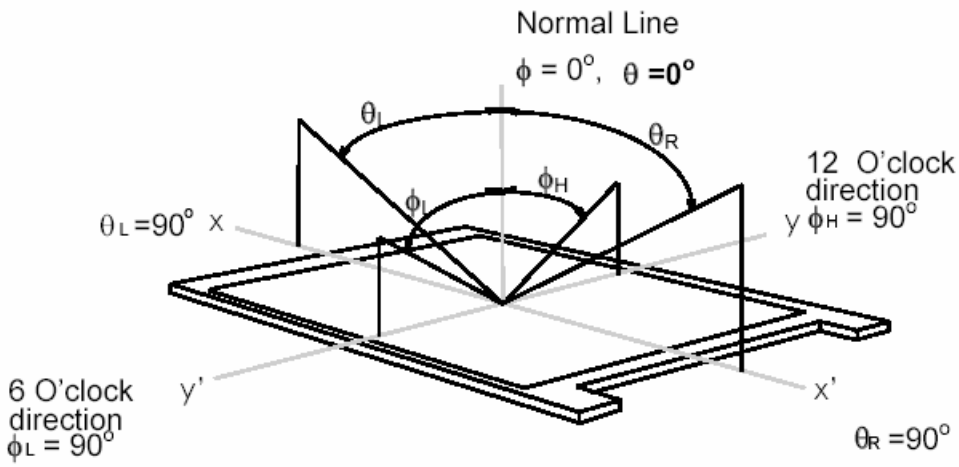

***Note 3:* Contrast ratio is** measured by TOPCON SR-3

***Note 4:* Definition of Response time** measured by Westar TRD-100A

The output signals of photo detector are measured when the input signals are changed from "Full Black" to "Full White" (rising time, Tr_R), and from "Full White" to "Full Black" (falling time, Tf_F), respectively. The response time is interval between the 10% and 90% (1 frame at 60 Hz) of amplitudes.

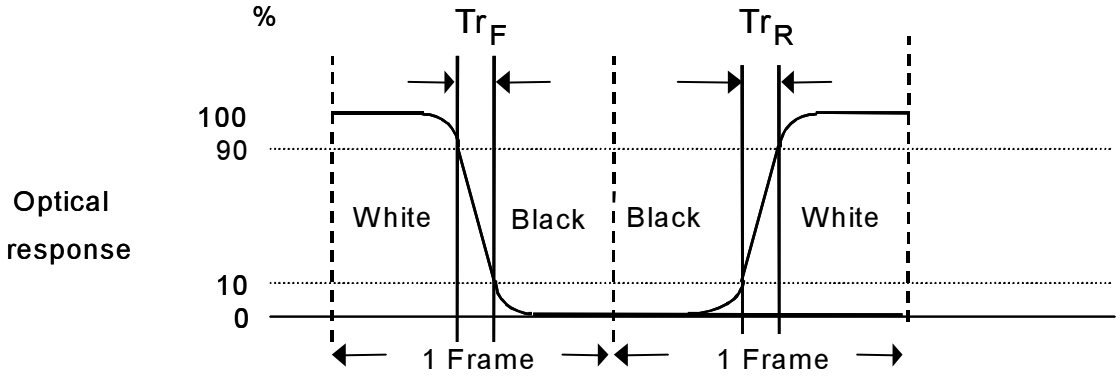

$Tr_R + Tf_F$ = 5 msec (typ.).

Algorithm:□Gray Level A – Gray Level B□□16, then the average gray to gray response time is 2 ms,
(F= 60 Hz).

***Note 5:* Color chromaticity and coordinates (CIE) is** measured by TOPCON SR-3

***Note 6*: Central luminance is** measured by TOPCON SR-3

***Note 7:* Luminance uniformity of these 9 points is defined as below and** measured by TOPCON SR-3

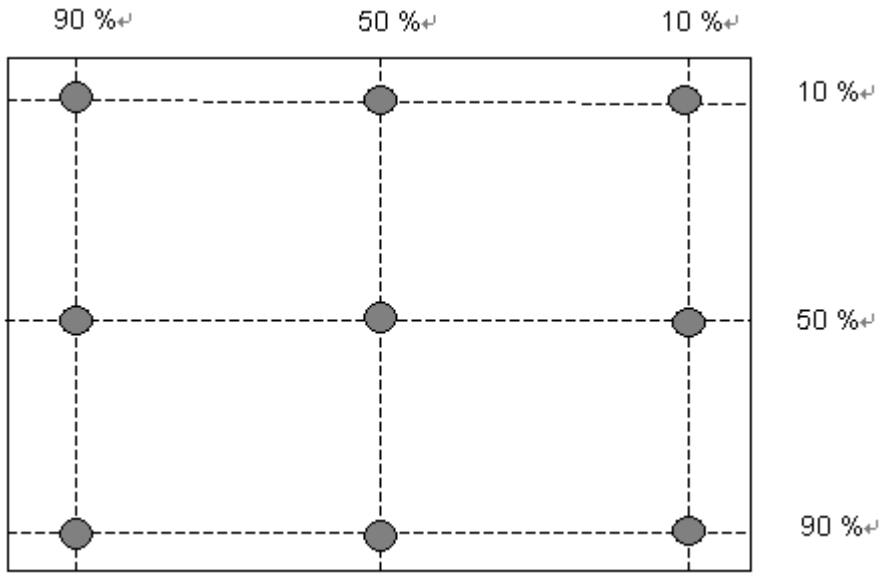

$$\text{Uniformity} = \frac{\text{Minimum Luminance in 9 points (1 - 9)}}{\text{Maximum Luminance in 9 Points (1 - 9)}}$$

Note 8: **Crosstalk is defined as below and** measured by TOPCON SR-3

CT = | YB – YA | / YA × 100 (%)

Where

YA = Luminance of measured location without gray level 0 pattern (cd/m2)

YB = Luminance of measured location with gray level 0 pattern (cd/m2)

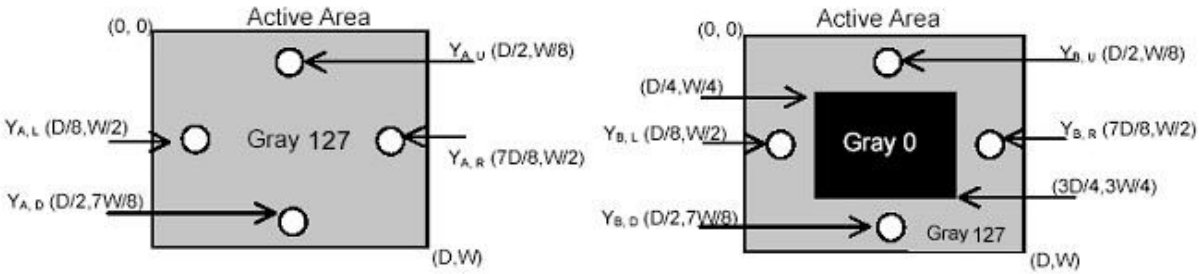

Note 9: **Test Patern: Subchecker Pattern** measured by TOPCON SR-3

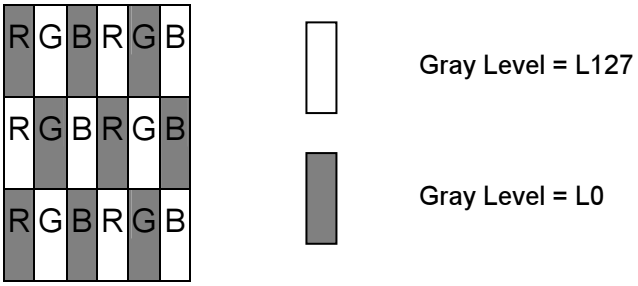

Method: Record dBV & DC value with TRD-100

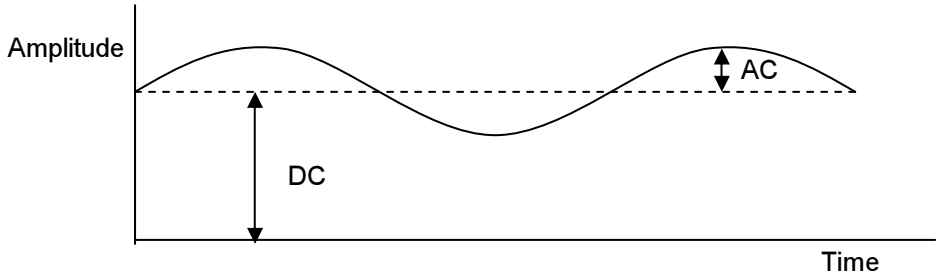

$$\text{Flicker (dB)} = 20\log\frac{\text{AC Level(at 30 Hz)}}{\text{DC Level}}$$

3.0 Functional Block Diagram

The following diagram shows the functional block of the 19.0 inch Color TFT-LCD Module:

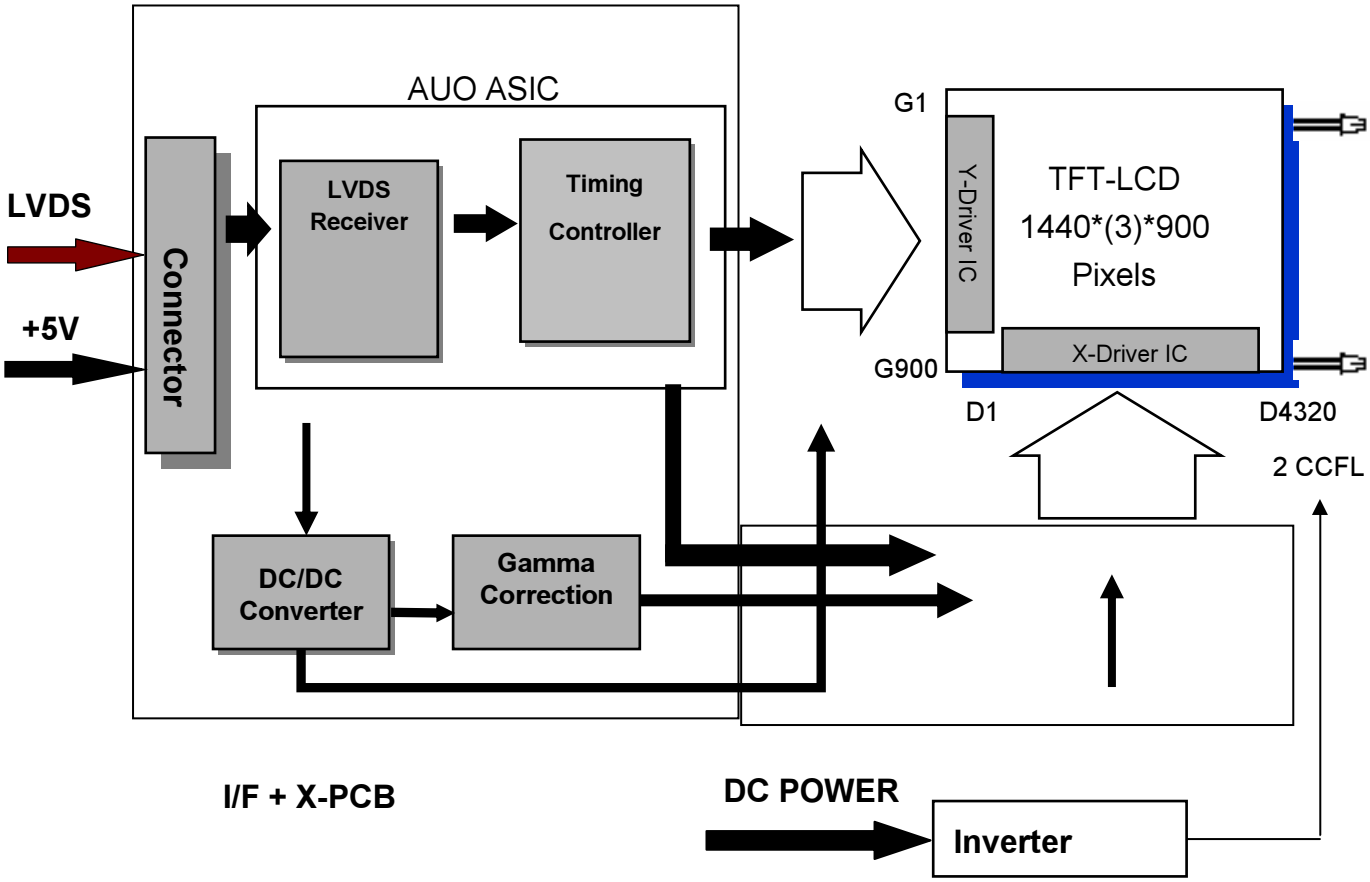

I/F PCB Interface:
FI-XB30SSL-HF15(JAE)/MSBKT2407P30HB(信盛)
Mating Type:
FI-X30HL-T(JAE)(Locked Type)

YEON HO 35001HS-02L
Mating Type: 35001WR-02LP

4.0 Absolute Maximum Ratings

Absolute maximum ratings of the module are as following:

4.1 TFT LCD Module

Item	Symbol	Min	Max	Unit	Conditions
Logic/LCD Drive Voltage	VDD	0	6	[Volt]	***Note 1,2***

4.2 Backlight Unit

Item	Symbol	Min	Max	Unit	Conditions
CCFL Current	ICFL	3.0	8	[mA] rms	***Note 1,2***

4.3 Absolute Ratings of Environment

Item	Symbol	Min.	Max.	Unit	Conditions
Operating Temperature	TOP	0	+50	[°C]	***Note 3***
Operation Humidity	HOP	5	90	[%RH]	
Storage Temperature	TST	-20	+60	[°C]	
Storage Humidity	HST	5	90	[%RH]	

Note 1: With in Ta (25□)
Note 2: Permanent damage to the device may occur if exceeding maximum values
Note 3: For quality perfermance, please refer to AUO IIS(Incoming Inspection Standard).

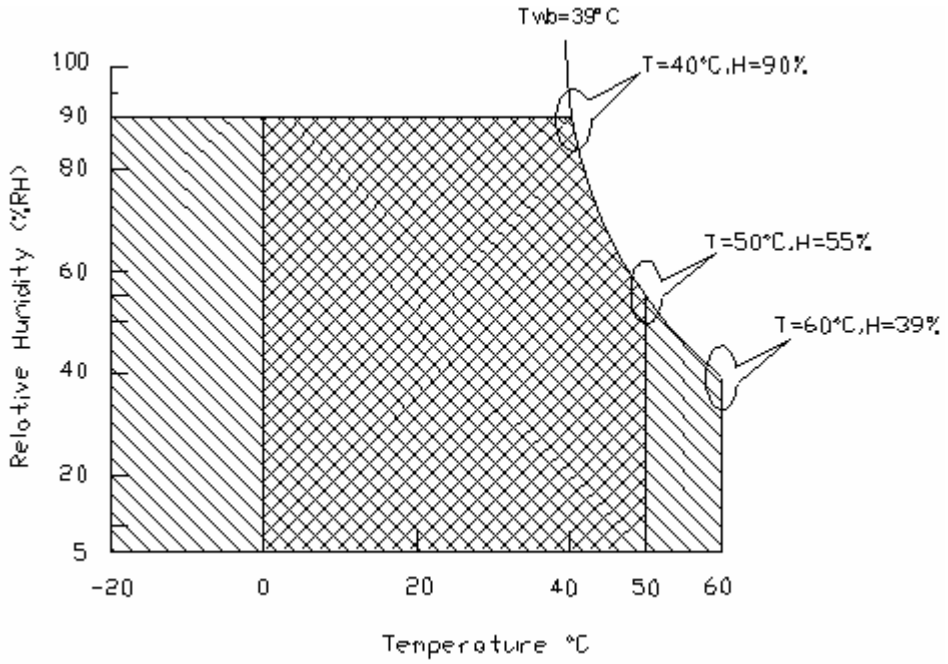

Operating Range ▨ Storage Range ▨ + ▨

5.0 Electrical characteristics

5.1 TFT LCD Module

5.1.1 Power Specification

Input power specifications are as following:

Symbol	Parameter	Min	Typ	Max	Unit	Conditions
VDD	Logic/LCD Drive Voltage	4.5	5.0	5.5	[Volt]	+/-10%
IDD	Input Current	-	0.9	1.1	[A]	VDD= 5.0V, All Black Pattern At 60Hz
PDD	VDD Power	-	4.5	5.5	[Watt]	VDD= 5.0V, All Black Pattern At 60Hz , Note 1
IRush	Inrush Current	-	-	3	[A]	Note 2
VDDrp	Allowable Logic/LCD Drive Ripple Voltage	-	-	250	[mV] p-p	VDD=5.0, All black pattern at 60Hz

Note 1: The variance of VDD power consumption is ±10%

Note 2: Measurement conditions:

The duration of rising time of power input is 470us.

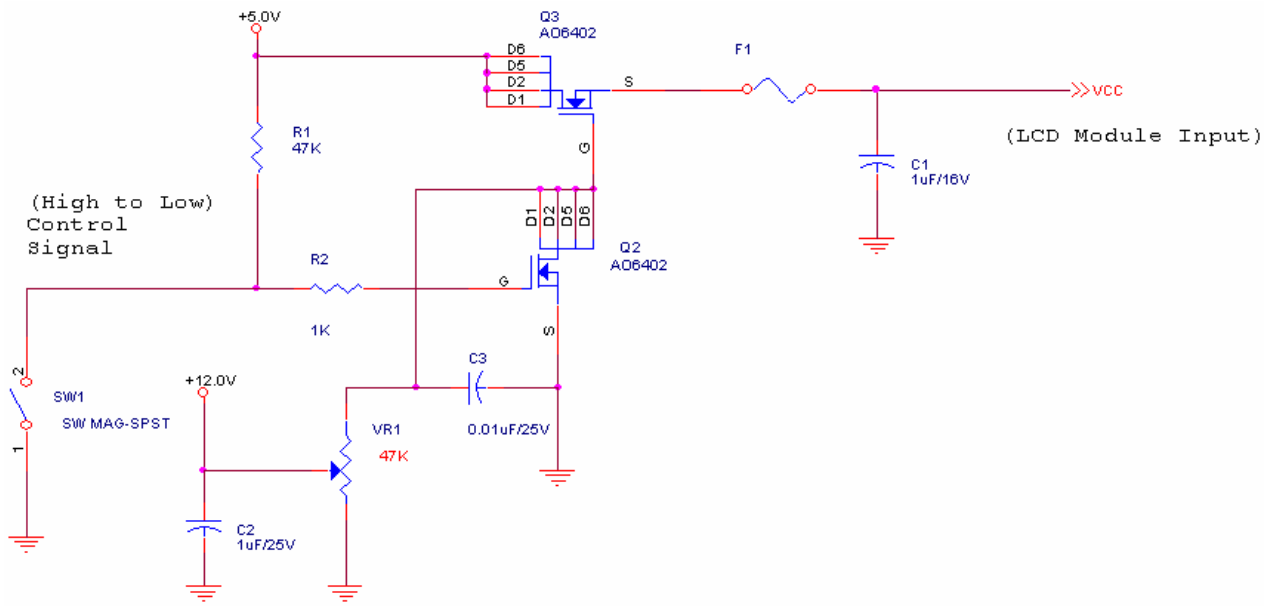

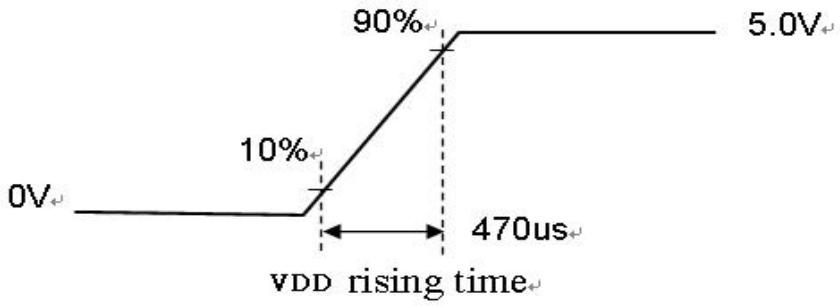

5.1.2 Signal Electrical Characteristics

Input signals shall be low or Hi-Z state when Vin is off
It is recommended to refer the specifications of SN75LVDS82DGG (Texas Instruments) in detail.

Each signal characteristics are as follows;

Symbol	Parameter	Min	Typ	Max	Units	Condition
VTH	Differential Input High Threshold	-	-	100	[mV]	VICM = 1.2V ***Note***
VTL	Differential Input Low Threshold	-100	-	-	[mV]	VICM = 1.2V ***Note***
|VID|	Input Differential Voltage	100	400	600	[mV]	***Note***
VICM	Differential Input Common Mode Voltage	1.0	1.2	1.5	[V]	VTH/VTL = ± 100mV ***Note***

Note: LVDS Signal Waveform

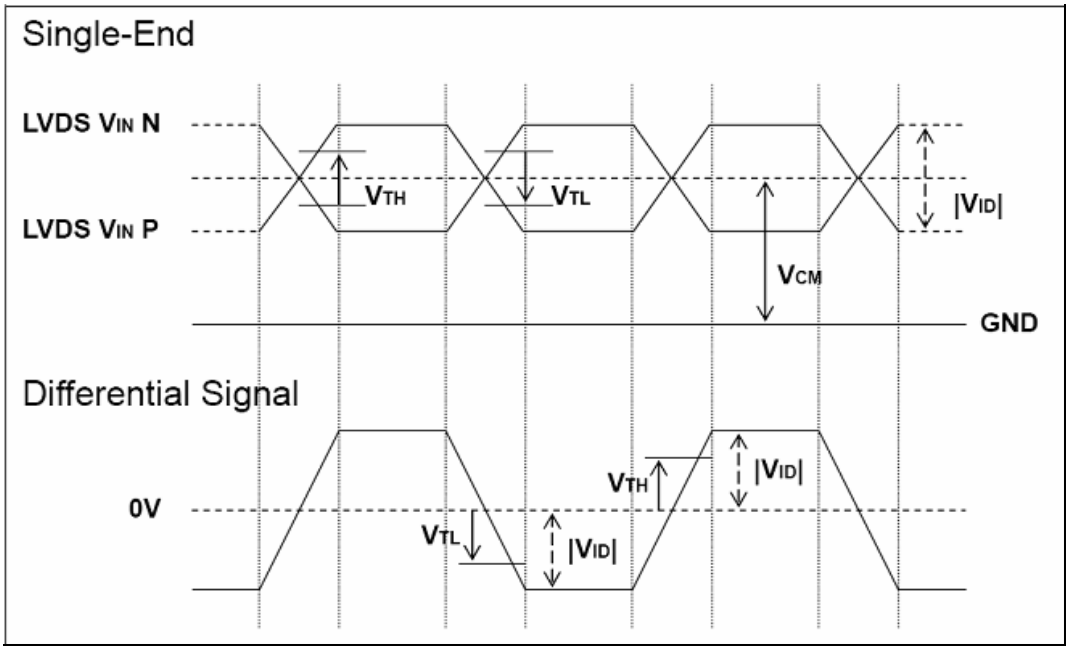

5.2 Backlight Unit

Parameter guideline for CCFL Inverter is under stable conditions at 25□ (Room Temperature):

Parameter	Min.□	Typ.	Max.□	Unit	Note
CCFL Standard Current (ISCFL)	7.0	7.5	8.0	[mA] rms	
CCFL Operation Current (IRCFL)	3.0	7.5	8.0	[mA] rms	***2***
CCFL Frequency (FCFL)	40	50	80	[KHz]	***3, 4***
CCFL Ignition Voltage (ViCFL, Ta= 0□)	1650	-	-	[Volt] rms	***5***
CCFL Ignition Voltage (ViCF, Ta= 25□)	1250	-	-	[Volt] rms	
CCFL Operation Voltage (VCFL)	-	700 (@7.5mA)	850	[Volt] rms	***6***
CCFL Power Consumption (PCFL)	-	11	12.1	[Watt]	
CCFL Life Time (LTCFL)	50,000	-	-	[Hour]	***7***

Note 1: Typ. values are AUO recommended design values.

*1 All of characteristics listed are measured under the condition using the AUO test inverter.

*2 It is recommended to check the inverter carefully. Sometimes, interfering noise stripes appear on the screen, and substandard luminance or flicker at low power may happen.

*3 While designing an inverter, it is suggested to check safety circuit very carefully. Impedance of CCFL, for instance, becomes more than 1 [M ohm] when CCFL is damaged.

*4 Generally, CCFL has certain delay time after applying kick-off voltage. It is recommended to keep on applying kick-off voltage for 1 [Sec] until discharge.

*5 Reducing CCFL current will increase CCFL discharge voltage and generally increases CCFL discharge frequency. So all the parameters of the inverter should be carefully designed so the inverter will not produce too much leakage current from high-voltage output.

*6 For designing CCFL current, it is highly recommanded to use symmetric and consistent sinusoidal wave for each CCFL input current with asymmetric ration of 10% or less in both postive area and negative area (ie. $0.9*\sqrt{2}*I_{rms} < I_1$ & $I_2 < 1.1*\sqrt{2}*I_{rms}$) as refer to the following diagram, otherwise proper CCFL functionality cannot be guarantied.

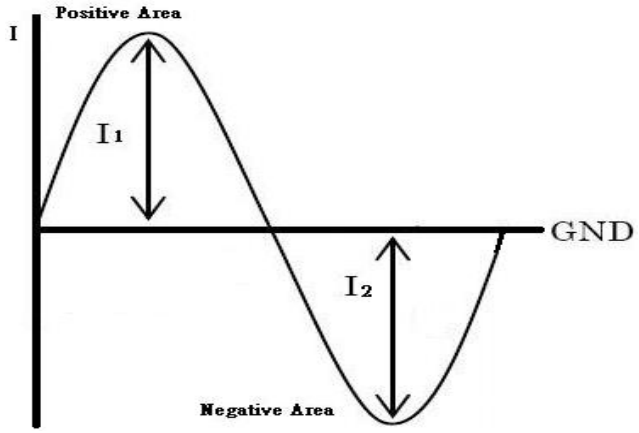

Note 2: CCFL standard current is measured at 25±2 .

Note 3: CCFL discharge frequency should be carefully determined to avoid interference between inverter and TFT LCD.

Note 4: The frequency range will not affect lamp life and reliability characteristics.

Note 5: CCFL inverter should be able to release power that has generating capacity exceeding TBD volt. Lamp units need minimum voltage, TBD Volt, for ignition.

Note 6: The variance of CCFL power consumption is ±10%. (IRCFL × VCFL × 4 = PCFL)

Note 7: Definition of life time: brightness becomes 50%. The minimum life time of CCFL unit is on the condition of 7.5mA CCFL current and 25±2 .

6.0 Signal Characteristic

6.1 Pixel Format Image

Following figure shows the relationship of the input signals and LCD pixel format.

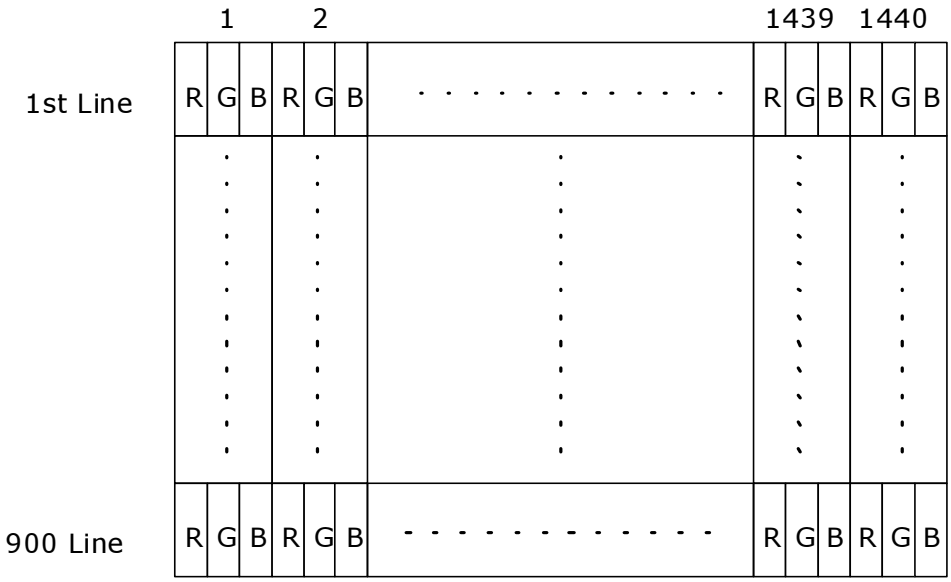

6.2 The input data format

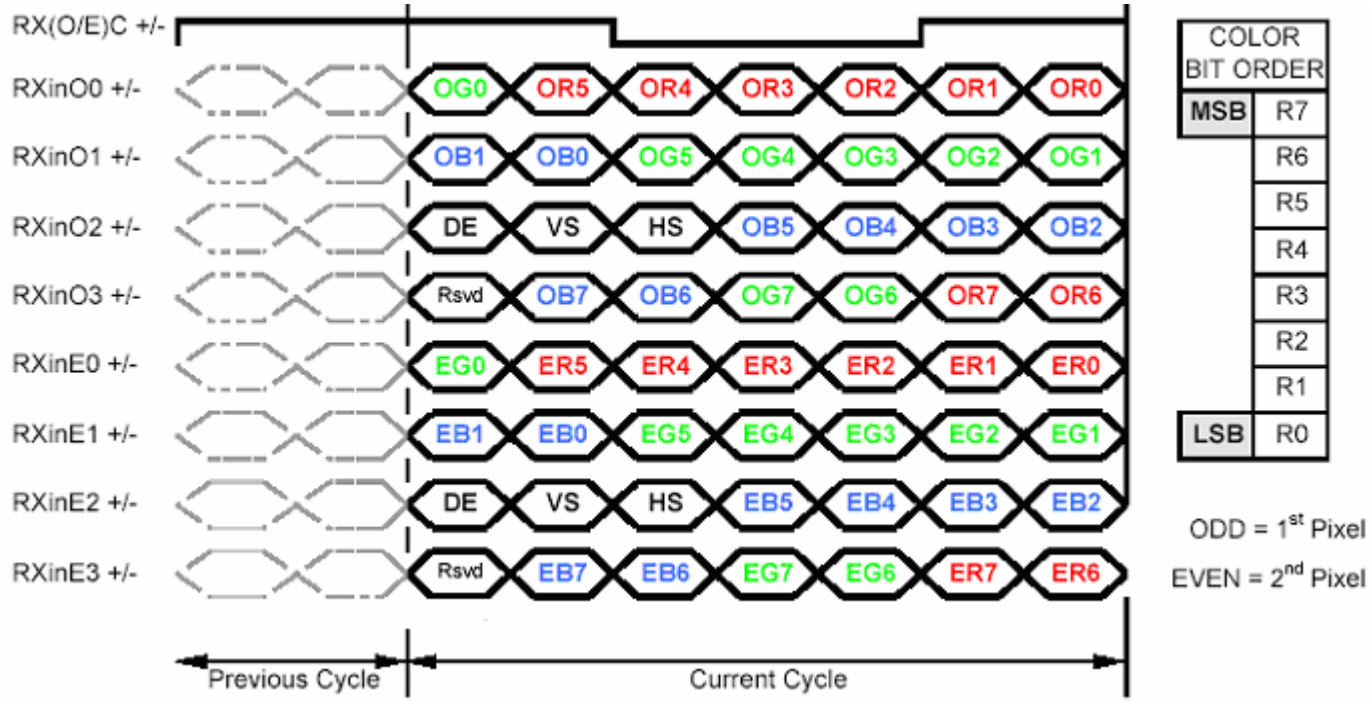

Note 1: R/G/B data 7:MSB, R/G/B data 0:LSB O = “First Pixel Data” E = “Second Pixel Data”

6.3 Signal Description

The module using one LVDS receiver SN75LVDS82(Texas Instruments). LVDS is a differential signal technology for LCD interface and high speed data transfer device. LVDS transmitters shall be SN75LVDS83(negative edge sampling). The first LVDS port(RxOxxx) transmits odd pixels while the second LVDS port(RxExxx) transmits even pixels.

PIN #	SIGNAL NAME	DESCRIPTION
1	RxOIN0-	Negative LVDS differential data input (Odd data)
2	RxOIN0+	Positive LVDS differential data input (Odd data)
3	RxOIN1-	Negative LVDS differential data input (Odd data)
4	RxOIN1+	Positive LVDS differential data input (Odd data)
5	RxOIN2-	Negative LVDS differential data input (Odd data, H-Sync,V-Sync,DSPTMG)
6	RxOIN2+	Positive LVDS differential data input (Odd data, H-Sync,V-Sync,DSPTMG)
7	GND	Power Ground
8	RxOCLKIN-	Negative LVDS differential clock input (Odd clock)
9	RxOCLKIN+	Positive LVDS differential clock input (Odd clock)
10	RxOIN3-	Negative LVDS differential data input (Odd data)
11	RxOIN3+	Positive LVDS differential data input (Odd data)
12	RxEIN0-	Negative LVDS differential data input (Even data)
13	RxEIN0+	Positive LVDS differential data input (Even data)
14	GND	Power Ground
15	RxEIN1-	Negative LVDS differential data input (Even data)
16	RxEIN1+	Positive LVDS differential data input (Even data)
17	GND	Power Ground
18	RxEIN2-	Negative LVDS differential data input (Even data)
19	RxEIN2+	Positive LVDS differential data input (Even data)
20	RxECLKIN-	Negative LVDS differential clock input (Even clock)
21	RxECLKIN+	Positive LVDS differential clock input (Even clock)
22	RxEIN3-	Negative LVDS differential data input (Even data)
23	RxEIN3+	Positive LVDS differential data input (Even data)
24	GND	Power Ground
25	NC	No contact (For AUO test only)
26	NC	No contact (For AUO test only)
27	NC	No contact (For AUO test only)
28	VCC	+5.0V Power Supply
29	VCC	+5.0V Power Supply
30	VCC	+5.0V Power Supply

Note1: Start from left side

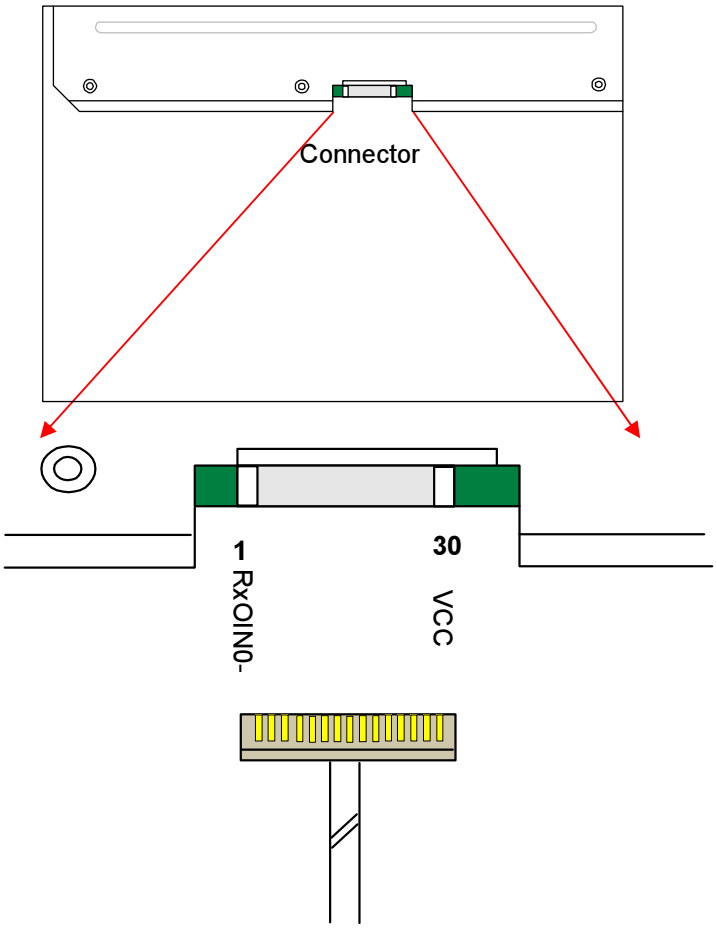

Note2: Input signals of odd and even clock shall be the same timing.

Note3: Please follow PSWG.

6.4 Timing Characteristics

Basically, interface timing described here is not actual input timing of LCD module but close to output timing of SN75LVDS82DGG (Texas Instruments) or equivalent.

Item		Symbol	Min	Typ	Max	Unit
Data CLK		Tclk	14.8	18.5	23.3	[ns]
H-section	Period	Th	870	964	2047	[Tclk]
	Display Area	Tdisp(h)	720	720	720	[Tclk]
	Blanking	Tblk(h)	150	244	1327	[Tclk]
V-section	Period	Tv	910	916	2047	[Th]
	Display Area	Tdisp(v)	900	900	900	[Th]
	Blanking	Tblk(v)	10	16	1147	[Th]
Frame Rate		F	50	60	76	[Hz]

Note : DE mode only

6.5 Timing diagram

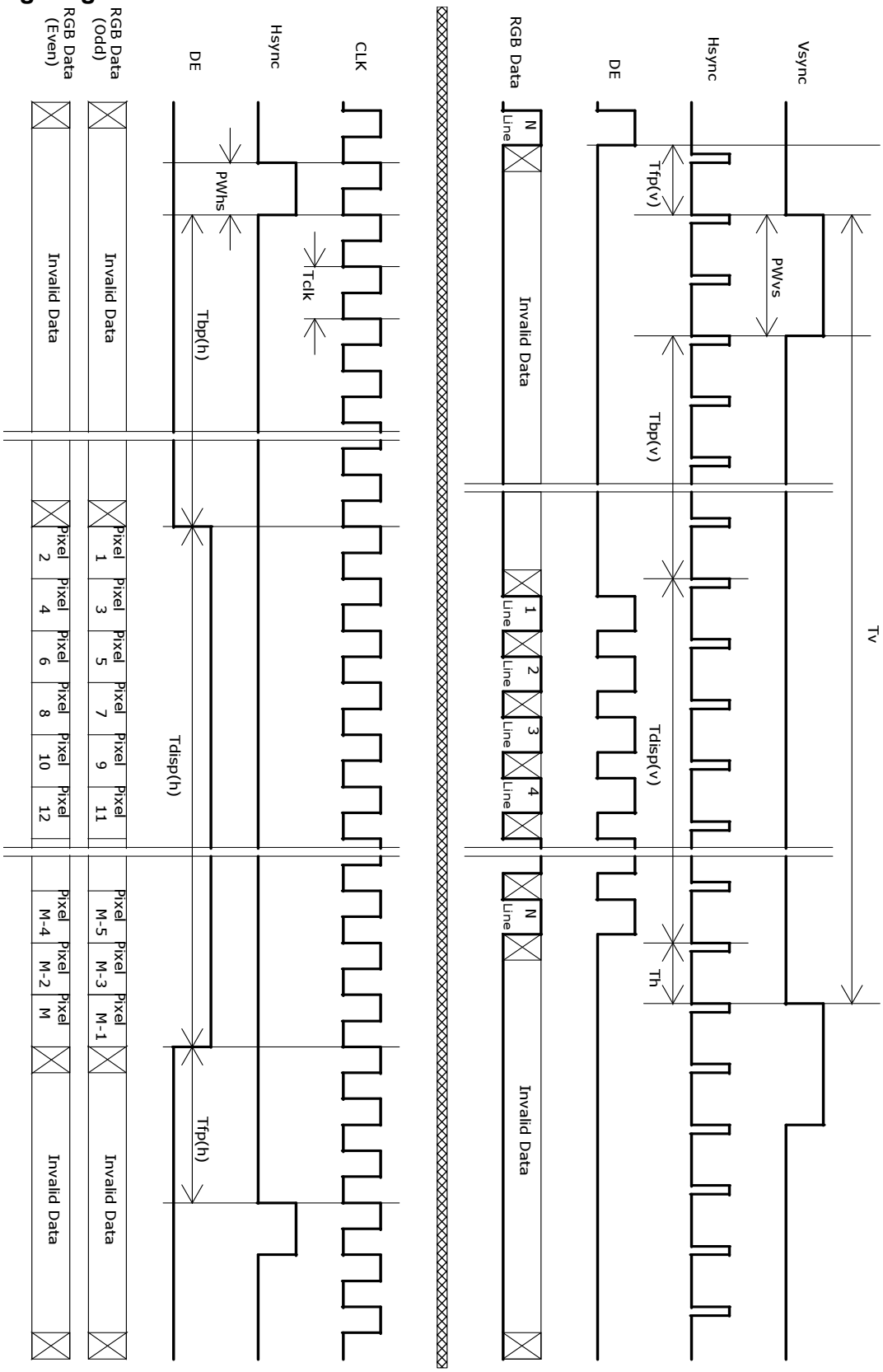

6.6 Power ON/OFF Sequence

VDD power and lamp on/off sequence are as follows. Interface signals are also shown in the chart. Signals from any system shall be Hi-Z state or low level when VDD is off.

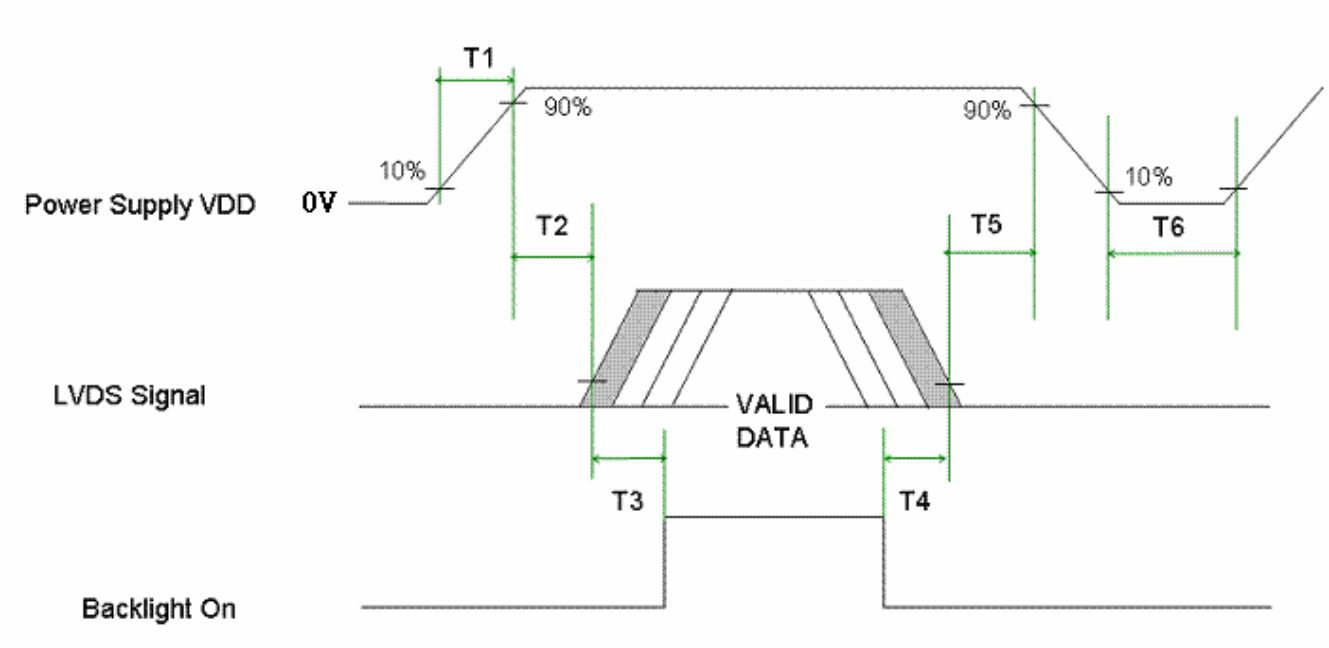

Parameter	Value		Unit
	Min.	Max.	
T1	0.5	10	[msec]
T2	0	50	[msec]
T3	500	-	[msec]
T4	200	-	[msec]
T5	0	50	[msec]
T6	1000	-	[msec]

7.0 Connector & Pin Assignment

Physical interface is described as for the connector on module. These connectors are capable of accommodating the following signals and will be following components.

7.1 TFT LCD Module

Connector Name / Designation	**Interface Connector / Interface card**
Manufacturer	JAE or STM(信盛)
Type Part Number	FI-XB30SSL-HF15 MSBKT2407P30HB
Mating Housing Part Number	FI-X30HL-T (Locked Type) FI-X30S-H (Unlocked Type) or equivalent

7.1.1 Pin Assignment

Pin#	Signal Name	Pin#	Signal Name
1	RxOIN0-	2	RxOIN0+
3	RxOIN1-	4	RxOIN1+
5	RxOIN2-	6	RxOIN2+
7	GND	8	RxOCLKIN-
9	RxOCLKIN+	10	RxOIN3-
11	RxOIN3+	12	RxEIN0-
13	RxEIN0+	14	GND
15	RxEIN1-	16	RxEIN1+
17	GND	18	RxEIN2-
19	RxEIN2+	20	RxECLKIN-
21	RxECLKIN+	22	RxEIN3-
23	RxEIN3+	24	GND
25	NC	26	NC
27	NC	28	VCC
29	VCC	30	VCC

7.2 Backlight Unit

Physical interface is described as for the connector on module. These connectors are capable of accommodating the following signals and will be following components.

Connector Name / Designation	Lamp Connector / Backlight lamp
Manufacturer	YEON HO
Type Part Number	35001HS-02L
Mating Type Part Number	35001WR-02LP or equivalent

7.2.1 Signal for Lamp connector

	Connector No.	Pin No.	Input	Color	Function
Upper	CN1	1	Hot1	Pink	High Voltage (Lamp 1)
		2	Cold1	White	Low Voltage (Lamp 1)

	Connector No.	Pin No.	Input	Color	Function
Lower	CN2	1	Hot1	Pink	High Voltage (Lamp 2)
		2	Cold1	White	Low Voltage (Lamp 2)

8.0 Reliability Test

Environment test conditions are listed as following table.

Items	Required Condition	Note
Temperature Humidity Bias (THB)	Ta= 50□, 80%RH, 300hours	
High Temperature Operation (HTO)	Ta= 50□, 50%RH, 300hours	
Low Temperature Operation (LTO)	Ta= 0□, 300hours	
High Temperature Storage (HTS)	Ta= 60□, 300hours	
Low Temperature Storage (LTS)	Ta= -20□, 300hours	
Vibration Test (Non-operation)	Acceleration: 1.5 Grms Wave: Random Frequency: 10 - 200 Hz Sweep: 30 Minutes each Axis (X, Y, Z)	
Shock Test (Non-operation)	Acceleration: 50 G Wave: Half-sine Active Time: 20 ms Direction: ±X, ±Y, ±Z (one time for each Axis)	
Drop Test	Height: 60 cm, package test	
Thermal Shock Test (TST)	-20□/30min, 60□/30min, 100 cycles	***1***
On/Off Test	On/10sec, Off/10sec, 30,000 cycles	
ESD (Electro Static Discharge)	Contact Discharge: ± 8KV, 150pF(330Ω) 1sec, 8 points, 25 times/ point.	***2***
	Air Discharge: ± 15KV, 150pF(330Ω) 1sec 8 points, 25 times/ point.	
Altitude Test	Operation:10,000 ft Non-Operation:30,000 ft	

Note 1: The TFT-LCD module will not sustain damage after being subjected to 100 cycles of rapid temperature change. A cycle of rapid temperature change consists of varying the temperature from -20℃ to 60℃, and back again. Power is not applied during the test. After temperature cycling, the unit is placed in normal room ambient for at least 4 hours before power on.

Note 2: EN61000-4-2, ESD class B: Certain performance degradation allowed
No data lost
Self-recoverable
No hardware failures.

9.0 Shipping Label

The label is on the panel as shown below:

Note 1: For Pb Free products, AUO will add for identification.

Note 2: For RoHS compatible products, AUO will add for identification.

Note 3: For China RoHS compatible products, AUO will add for identification.

Note 4: The Green Mark will be presented only when the green documents have been ready by AUO Internal Green Team.

10.0 Mechanical Characteristics

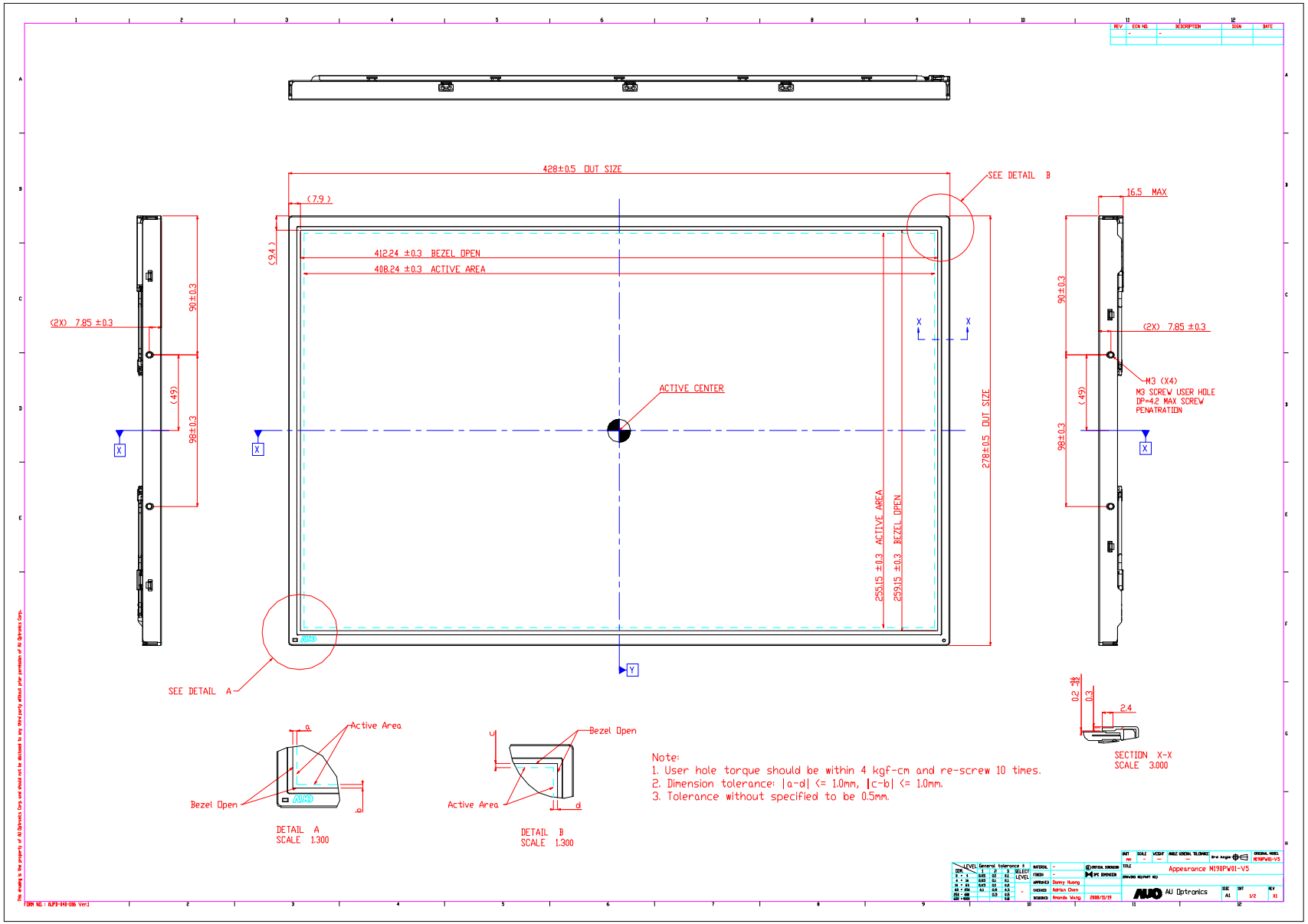

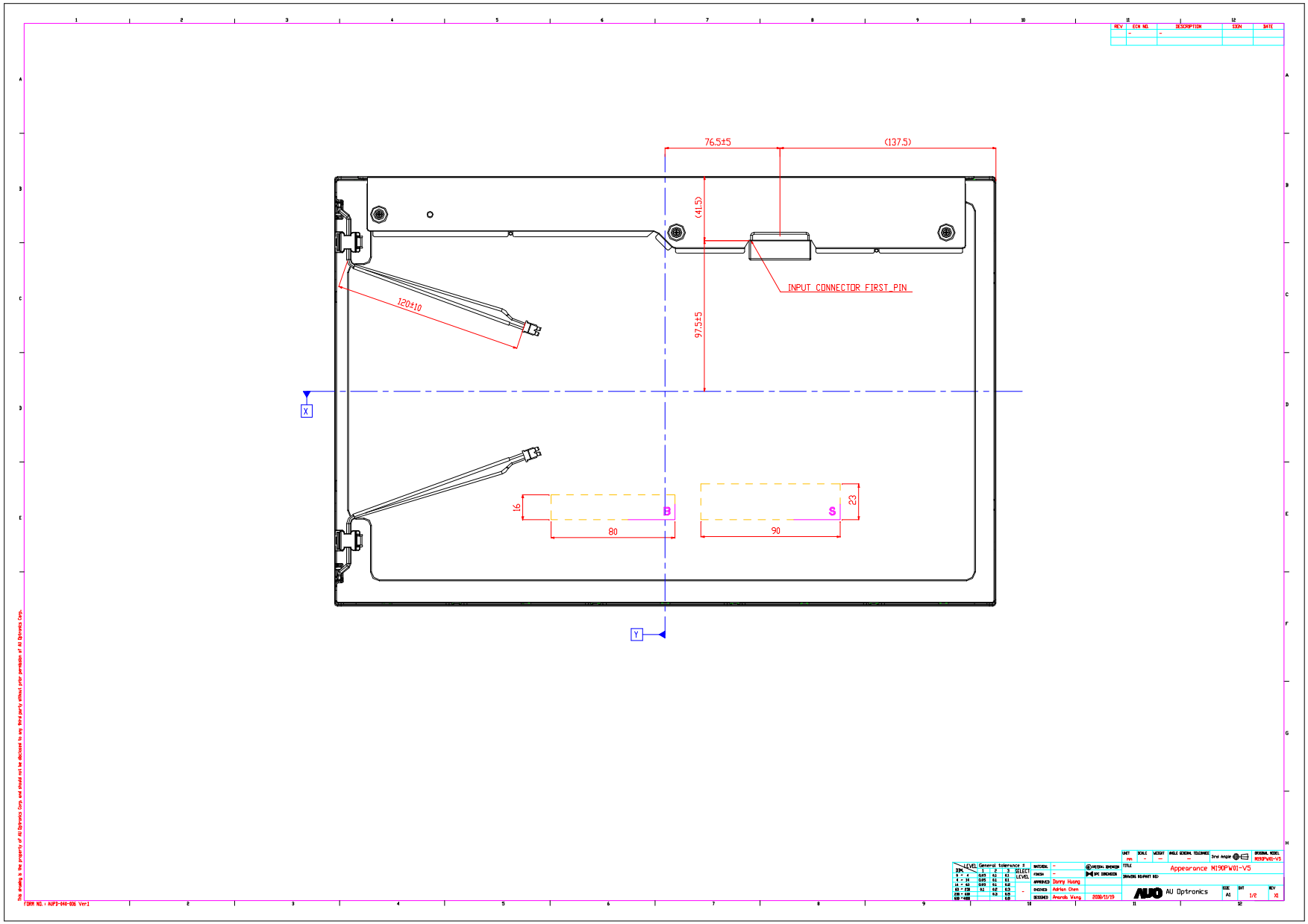
76.5±5
(137.5)
(41.5)
97.5±5
120±10
INPUT CONNECTOR FIRST PIN
X
Y
16
80
B
90
S
23
Appearance M190PW01-V5
AU Optronics
Danny Huang
Adrian Chen
Amanda Wang
2020/11/19
M190PW01-V5
A1
1/2
X1

Ver 0.1