EPSON

Specification

7.6cm (3.0") transflective TFT

L5S30878

Version June 2009

	D a t e	Revision Number
Issued Date	March 19, 2009	00
Revised Date	June 1, 2009	01

REVISION HISTORY

Product Number	Rev.	Revised item	Date
L5S30878P00	00	New Issue	March 19, 2009
	01	Partial corrections: 1) 2.1.1 MPU Serial Interface "D/CX _ 1" ･･･p 5 2) (8)MADCTL <parameter> "P1 " ･･･p12 3) 5. OPTICAL SPECIFCATIONS "Frame Frequency " ･･･p31 4) 5.2.2 Measurement conditions of optical characteristics "Frame Frequency " ･･･p35 5) Condition (2) "Measurement aperture " ･･･p36 Partially deleted charts: 1) (8)MADCTL <Settings for each position of Driver IC> ･･･p12 Section deleted: 1) 2.2.1 Command List "RAMWR" ･･･p 8 2) "RAMWR" ･･･p11 3) 4.4.1 Power ON Sequence "RAMWR" ･･･p29 Description added: 1) "Quality Standard" ･･･p37	June 1, 2009

QA STD Number	QSME01E

CONTENTS

1. BASIC SPECIFICATIONS

1.1 STRUCTURES

No.	PARAMETER	SPECIFICATIONS
1	LCD Structure	TFT LCD
2	Outward	45.15（W） x 76.6（H） x 2.62（D）mm (excluding part of protruding) *1)
3	Weight	Approx. 17 g (excluding protective film)
4	Screen Size	39.24(W) x 65.4(H)mm
5	Number of Dots	720(240 x RGB)(W) x 400(H)
6	Dot Pitch	0.0545(W) x 0.1635(H)mm
7	Color Layout	Stripe
8	Viewing Direction	1:30
9	LCD Optical Mode	Transflective with High-Reflectance display, ECB mode
10	Polarizer Type	LR type
11	Number of Colors	262k

*1) See attached drawing for details

1.2 BLOCK DIAGRAM

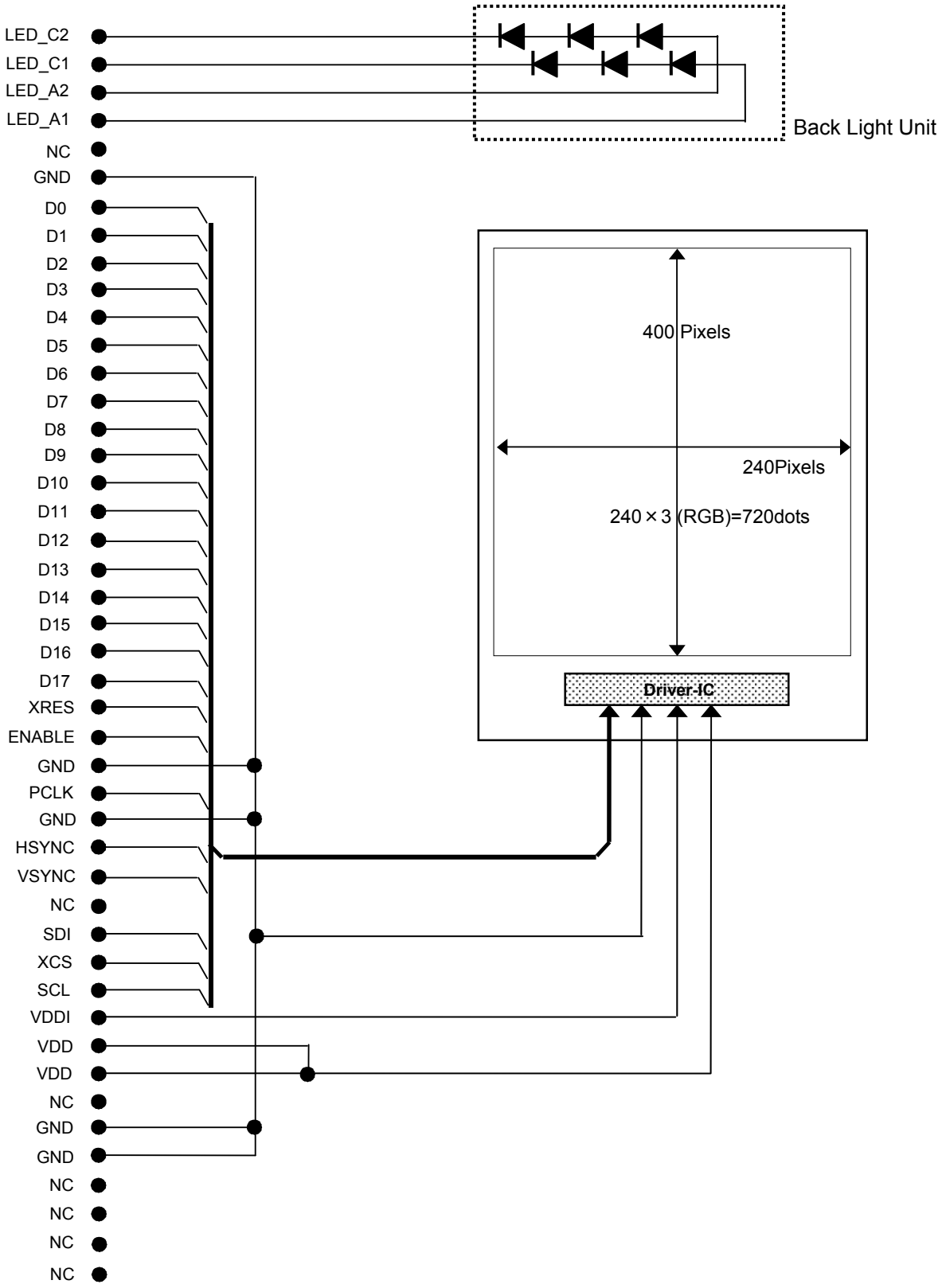

1.3 I/O PINS

PIN	SYMBOL	FUNCTION	I/O	REMARKS
1	LED_C2	LED cathode2	P	
2	LED_C1	LED cathode1	P	
3	LED_A2	LED anode2	P	
4	LED_A1	LED anode1	P	
5	NC	Not connect	-	Open
6	GND	Ground	P	
7	D0	(RGB-IF) Data	I	Data for Display
8	D1	(RGB-IF) Data	I	Data for Display
9	D2	(RGB-IF) Data	I	Data for Display
10	D3	(RGB-IF) Data	I	Data for Display
11	D4	(RGB-IF) Data	I	Data for Display
12	D5	(RGB-IF) Data	I	Data for Display
13	D6	(RGB-IF) Data	I	Data for Display
14	D7	(RGB-IF) Data	I	Data for Display
15	D8	(RGB-IF) Data	I	Data for Display
16	D9	(RGB-IF) Data	I	Data for Display
17	D10	(RGB-IF) Data	I	Data for Display
18	D11	(RGB-IF) Data	I	Data for Display
19	D12	(RGB-IF) Data	I	Data for Display
20	D13	(RGB-IF) Data	I	Data for Display
21	D14	(RGB-IF) Data	I	Data for Display
22	D15	(RGB-IF) Data	I	Data for Display
23	D16	(RGB-IF) Data	I	Data for Display
24	D17	(RGB-IF) Data	I	Data for Display
25	XRES	Device Reset Signal	I	“L” active
26	ENABLE	(RGB-IF) Display Data enable	I	
27	GND	Ground	P	
28	PCLK	(RGB-IF) Data clock	I	
29	GND	Ground	P	
30	HSYNC	(RGB-IF) Horizontal synchronous signal	I	
31	VSYNC	(RGB-IF) Vertical synchronous signal	I	
32	NC	Not connect	-	Open
33	SDI	(MPU-Serial-IF) Data	I	Data for Command
34	XCS	Chip select signal.	I	“H” SDI = Hi-z
35	SCL	(MPU-Serial-IF) Serial clock	I	Rising edge operation
36	VDDI	Power supply for I/O logic	P	
37	VDD	Power supply for system	P	
38	VDD	Power supply for system	P	
39	NC	Not connect	-	Open
40	GND	Ground	P	
41	GND	Ground	P	
42	NC	Not connect	-	Open
43	NC	Not connect	-	Open
44	NC	Not connect	-	Open
45	NC	Not connect	-	Open

P :power supply I: Input

2. FUNCTIONS

2.1 OVERVIEW

This LCD module is equipped with two kind of Interface used for transferring of command data and pixel data.

1) MPU Serial Interface

Serial bus with MPU control for transferring commands

2) RGB interface

RGB data (R: 6bit, G: 6bit, B: 6bit) and HSYNC, VSYNC, PCLK, ENABLE for transferring display-contents

ID[7:0] and IB[7:0:] are joined and defined as "Command" in this document.

See 2.2.1 Command List for details.

2.1.1. MPU Serial Interface

MPU serial interface is performed by three signal lines.

XCS	Chip select signal
SCL	Serial transfer clock signal
SDI	Serial input data signal (latched by rising edge of SCL)

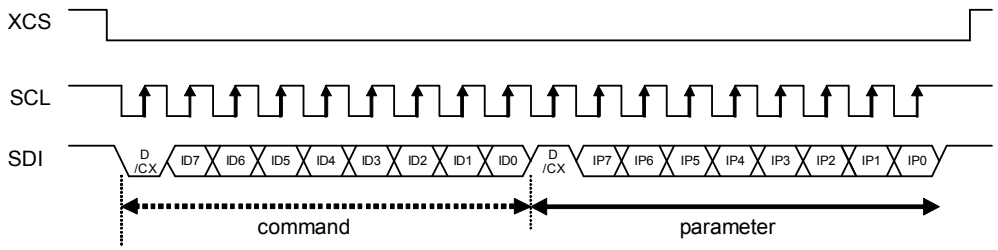

D/CX	
0	Command
1	Parameter

2.1.2. RGB Interface

The display data is input synchronizing with HSYNC, VSYNC, ENABLE and PCLK

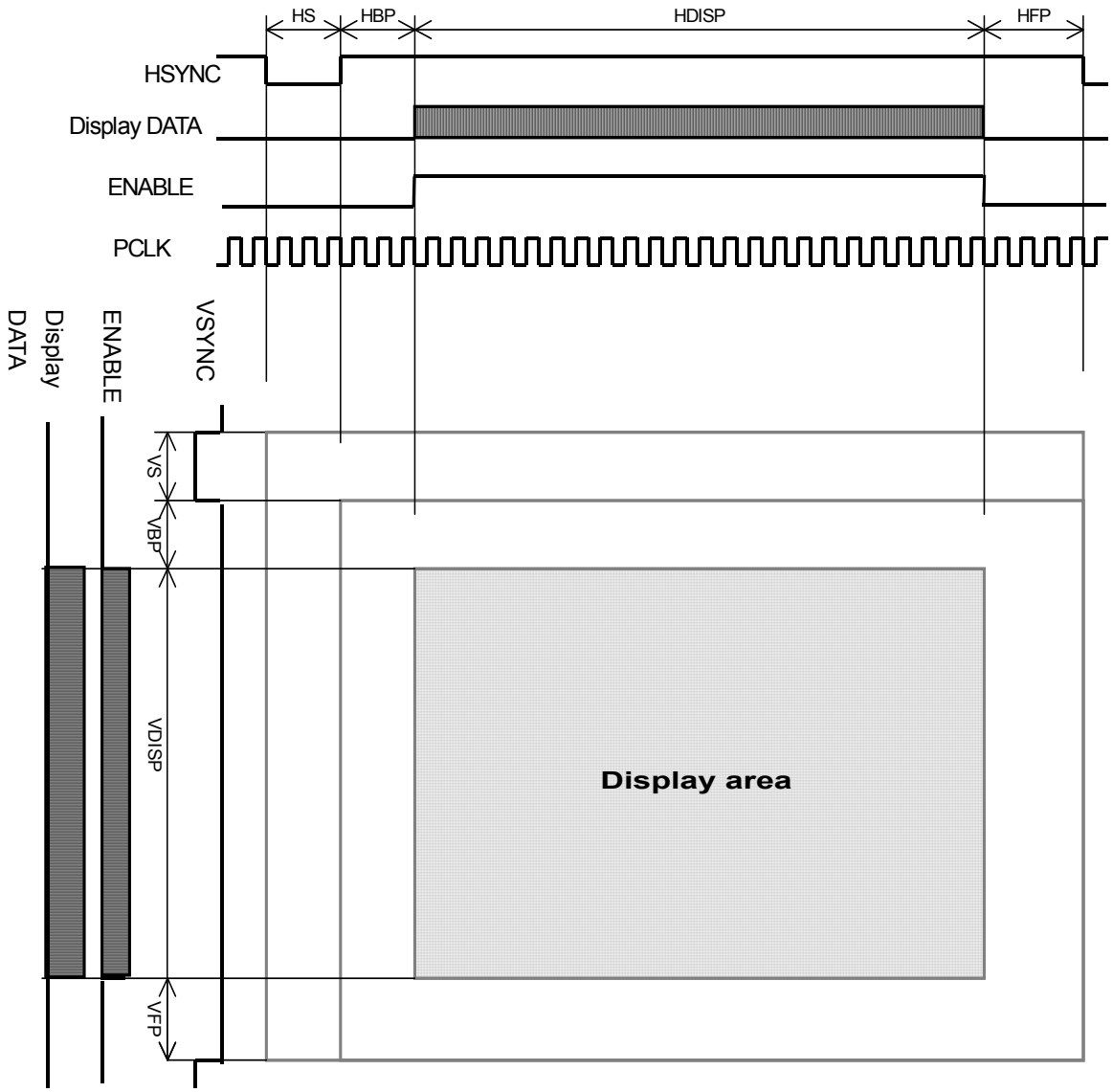

Name	Description
VS	Vertical Sync Time （VSYNC=L）
VBP	Vertical Back Porch
VDISP	Vertical Display Active Time
VFP	Vertical Front Porch
HS	Horizontal Sync Time (HSYNC=L)
HBP	Horizontal Back Porch
HDISP	Horizontal Display Active Time
HFP	Horizontal Front Porch

2.1.3. Display Format

18bit RGB interface

PIN	Cycle					
	1	2	3	…	239	240
D17	1R5	2R5	3R5	…	239R5	240R5
D16	1R4	2R4	3R4	…	239R4	240R4
D15	1R3	2R3	3R3	…	239R3	240R3
D14	1R2	2R2	3R2	…	239R2	240R2
D13	1R1	2R1	3R1	…	239R1	240R1
D12	1R0	2R0	3R0	…	239R0	240R0
D11	1G5	2G5	3G5	…	239G5	240G5
D10	1G4	2G4	3G4	…	239G4	240G4
D9	1G3	2G3	3G3	…	239G3	240G3
D8	1G2	2G2	3G2	…	239G2	240G2
D7	1G1	2G1	3G1	…	239G1	240G1
D6	1G0	2G0	3G0	…	239G0	240G0
D5	1B5	2B5	3B5	…	239B5	240B5
D4	1B4	2B4	3B4	…	239B4	240B4
D3	1B3	2B3	3B3	…	239B3	240B3
D2	1B2	2B2	3B2	…	239B2	240B2
D1	1B1	2B1	3B1	…	239B1	240B1
D0	1B0	2B0	3B0	…	239B0	240B0

2.2 COMMANDS

2.2.1 Command List

No	COMMAND	COMMAND Level	Hex	ID7	ID6	ID5	ID4	ID3	ID2	ID1	ID0	Parameter
1	SLPIN	Level1	10h	0	0	0	1	0	0	0	0	No
2	SLPOUT		11h	0	0	0	1	0	0	0	1	No
3	GAMSET		26h	0	0	1	0	0	1	1	0	Yes (1Byte)
4	DISOFF		28h	0	0	1	0	1	0	0	0	No
5	DISON		29h	0	0	1	0	1	0	0	1	No
6	CASET		2Ah	0	0	1	0	1	0	1	0	Yes (4Byte)
7	PASET		2Bh	0	0	1	0	1	0	1	1	Yes (4Byte)
8	MADCTL		36h	0	0	1	1	0	1	1	0	Yes (1Byte)
9	COLMOD	Level2	3Ah	0	0	1	1	1	0	1	0	Yes (1Byte)
10	ADCCTL		5Bh	0	1	0	1	1	0	1	1	Yes (1Byte)
11	SSLCTL		70h	0	1	1	1	0	0	0	0	Yes (1Byte)
12	PWMENB		8Ah	1	0	0	0	1	0	1	0	Yes (1Byte)
13	DISCTL		B0h	1	0	1	1	0	0	0	0	Yes (20Byte)
14	PWRCTL		B1h	1	0	1	1	0	0	0	1	Yes (19Byte)
15	RGBIF		B2h	1	0	1	1	0	0	1	0	Yes (6Byte)
16	MADDEF		B8h	1	0	1	1	1	0	0	0	Yes (3Byte)
17	GAMMSET P0		C0h	1	1	0	0	0	0	0	0	Yes (13Byte)
18	GAMMSET N0		C1h	1	1	0	0	0	0	0	1	Yes (13Byte)
19	AMPCTL		CCh	1	1	0	0	1	1	0	0	Yes (1Byte)
20	DLS		CDh	1	1	0	0	1	1	0	1	Yes (1Byte)
21	RGBDN		CEh	1	1	0	0	1	1	1	0	Yes (1Byte)
22	MTPCTL		D0h	1	1	0	1	0	0	0	0	Yes (1Byte)
23	EXTCMMOD1		F0h	1	1	1	1	0	0	0	0	Yes (1Byte)
24	EXTCMMOD2		F1h	1	1	1	1	0	0	0	1	Yes (1Byte)

The command which has a parameter must not enter a data more than necessity.
As for the necessary number of parameters, refer to above table.

2.2.2 Command Details

See 4.4 RECOMMENDED SEQUENCE to design a command sequence and intervals.

(1) SLPIN

This command is used to set TFTLCD module to the sleep state.

When in sleep state, the oscillating circuit and the power circuit are suspended.

After using this command, the power supply voltage (VDD, VDDI) must be maintained for more than 200ms.

This command should be entered after DISOFF.

<command>

Hex	ID7	ID6	ID5	ID4	ID3	ID2	ID1	ID0	Remarks
10h	0	0	0	1	0	0	0	0	

The default setting is SLPIN state.

(2) SLPOUT

This command is used to set TFTLCD module to quit the sleep state.

By entering this command, the oscillating circuit and the power circuit start to operation.

Output voltages of the power circuit are stabilized after 200ms or less from this command.

<command>

Hex	ID7	ID6	ID5	ID4	ID3	ID2	ID1	ID0	Remarks
11h	0	0	0	1	0	0	0	1	

The default setting is SLPIN state.

(3) GAMSET

This command is used to setting Gamma curve.

<command>

Hex	ID7	ID6	ID5	ID4	ID3	ID2	ID1	ID0	Remarks
26h	0	0	1	0	0	1	1	0	

<parameter>

	Hex	IP7	IP6	IP5	IP4	IP3	IP2	IP1	IP0	Remarks
P1	01h	0	0	0	0	0	0	0	1	

Be sure to use the value specified on this table.

(4) DISOFF

This command is used to forcibly control the display to OFF state.

<command>

Hex	ID7	ID6	ID5	ID4	ID3	ID2	ID1	ID0	Remarks
28h	0	0	1	0	1	0	0	0	

The default setting is DISOFF state.

(5) DISON

This command is used to control the display to the operative state. This command should be entered after SLPOUT.

<command>

Hex	ID7	ID6	ID5	ID4	ID3	ID2	ID1	ID0	Remarks
29h	0	0	1	0	1	0	0	1	

The default setting is DISOFF state.

(6) CASET

CASET and the subsequent parameters are used to set the column address limits of RAM. When column address is incremented to the end column, the column address returns to the start column and the page address is incremented. After page address is incremented to the end page, the page address returns to the start page. The start column value must be less than the end column value.

<command>

Hex	ID7	ID6	ID5	ID4	ID3	ID2	ID1	ID0	Remarks
2Ah	0	0	1	0	1	0	1	0	

<parameter>

	Hex	IP7	IP6	IP5	IP4	IP3	IP2	IP1	IP0	Remarks
P1	00h	0	0	0	0	0	0	0	0	Start column -upper
P2	00h	0	0	0	0	0	0	0	0	Start column -lower
P3	00h	0	0	0	0	0	0	0	0	End column -upper
P4	EFh	1	1	1	0	1	1	1	1	End column -lower

The default setting of Start column is 0000h, End column is 00EFh.

(7) PASET

PASET and the subsequent parameters are used to set the page address limits of display RAM. When column address is incremented to the end column, the column address returns to the start column and the page address is incremented. After page address is incremented to the end page, the page address returns to the start page. The start page value must be less than the end page value.

<command>

Hex	ID7	ID6	ID5	ID4	ID3	ID2	ID1	ID0	Remarks
2Bh	0	0	1	0	1	0	1	1	

<parameter>

	Hex	IP7	IP6	IP5	IP4	IP3	IP2	IP1	IP0	Remarks
P1	00h	0	0	0	0	0	0	0	0	Start page -upper
P2	00h	0	0	0	0	0	0	0	0	Start page -lower
P3	01h	0	0	0	0	0	0	0	1	End page -upper
P4	8Fh	1	0	0	0	1	1	1	1	End page -lower

The default setting of Start page is 0000h, End page is 01AFh.

(8) MADCTL

This command and the subsequent parameter are used to set the accessing direction of VRAM. It represents the position of Driver IC.

<command>

Hex	ID7	ID6	ID5	ID4	ID3	ID2	ID1	ID0	Remarks
36h	0	0	1	1	0	1	1	0	

<parameter>

	Hex	IP7	IP6	IP5	IP4	IP3	IP2	IP1	IP0	Remarks
P1	-	P17	P16	0	P14	1	0	0	0	

Be sure to use the value specified on this table for IP5, IP3, IP2, IP1 and IP0 of P1

< Settings for Each Position of the Driver IC >

	P17	P16	P14	CASET parameters	PASET parameters
1. Driver IC on the Bottom	0	1	0	P1P2=0000h P3P4=00EFh	P1P2=0000h P3P4=018Fh
2. Driver IC on the Top	1	0	1		

Specified parameters of MADCTL are at the case of MADDEF:P1 = 00h.

Specified parameters of CASET and PASET are at the case of all area display.

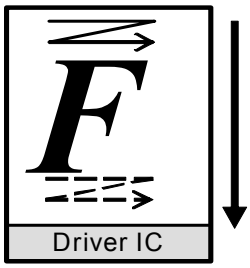

1.Drive IC on the bottom

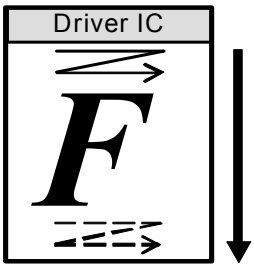

2.Driver IC on the top

At the case of MADDEF:P1=00h

LCD Gate scanning direction

RAM writing direction by interface

RAM reading direction by LCD

(9) COLMOD

This command and the subsequent parameter are used to set the color mode.

<command>

Hex	ID7	ID6	ID5	ID4	ID3	ID2	ID1	ID0	Remarks
3Ah	0	0	1	1	1	0	1	0	

<parameter>

	Hex	IP7	IP6	IP5	IP4	IP3	IP2	IP1	IP0	Remarks
P1	06h	0	0	0	0	0	1	1	0	color mode setting

Be sure to use the value specified on this table.

(10) ADCCTL

This command and the subsequent parameters are stopped the test signal.

<command>

Hex	ID7	ID6	ID5	ID4	ID3	ID2	ID1	ID0	Remarks
5Bh	0	1	0	1	1	0	1	1	

<parameter>

	Hex	IP7	IP6	IP5	IP4	IP3	IP2	IP1	IP0	Remarks
P1	CCh	1	1	0	0	1	1	0	0	

Be sure to use the value specified on this table.

(11) SSLCTL

This command and the subsequent parameters are stopped the test signal.

<command>

Hex	ID7	ID6	ID5	ID4	ID3	ID2	ID1	ID0	Remarks
70h	0	1	1	1	0	0	0	0	

<parameter>

	Hex	IP7	IP6	IP5	IP4	IP3	IP2	IP1	IP0	Remarks
P1	00h	0	0	0	0	0	0	0	0	

Be sure to use the value specified on this table.

(12) PWMENB

This command and the subsequent parameters are stopped the test signal.

<command>

Hex	ID7	ID6	ID5	ID4	ID3	ID2	ID1	ID0	Remarks
8Ah	1	0	0	0	1	0	1	0	

<parameter>

	Hex	IP7	IP6	IP5	IP4	IP3	IP2	IP1	IP0	Remarks
P1	01h	0	0	0	0	0	0	0	1	

Be sure to use the value specified on this table.

(13) DISCTL

This command and the subsequent parameters are used to set timings for display. These command and parameters should be entered before SLPOUT.

<command>

Hex	ID7	ID6	ID5	ID4	ID3	ID2	ID1	ID0	Remarks
B0h	1	0	1	1	0	0	0	0	

<parameter>

	Hex	IP7	IP6	IP5	IP4	IP3	IP2	IP1	IP0	Remarks
P1	29h	0	0	1	0	1	0	0	1	Number of clocks for 1H (Normal mode)
P2	23h	0	0	1	0	0	0	1	1	Number of clocks for 1H (Partial mode)
P3	23h	0	0	1	0	0	0	1	1	Number of clocks for 1H (Idle mode)
P4	23h	0	0	1	0	0	0	1	1	Number of clocks for 1H (Partial-Idle mode)
P5	02h	0	0	0	0	0	0	1	0	Vertical back-porch (Normal mode)
P6	2Ah	0	0	1	0	1	0	1	0	Vertical back-porch (Partial mode)
P7	2Ah	0	0	1	0	1	0	1	0	Vertical back-porch (Idle mode)
P8	2Ah	0	0	1	0	1	0	1	0	Vertical back-porch (Partial-idle mode)
P9	02h	0	0	0	0	0	0	1	0	Vertical front-porch (Normal mode)
P10	26h	0	0	1	0	0	1	1	0	Vertical front -porch (Partial mode)
P11	26h	0	0	1	0	0	1	1	0	Vertical front -porch (Idle mode)
P12	26h	0	0	1	0	0	1	1	0	Vertical front -porch (Partial-idle mode)
P13	B2h	1	0	1	1	0	0	1	0	Lowest bit setting. Display duty setting.
P14	3Fh	0	0	1	1	1	1	1	1	Display mode.
P15	55h	0	1	0	1	0	1	0	1	Porch driving setting.
P16	07h	0	0	0	0	0	1	1	1	Source output delay setting.
P17	0Fh	0	0	0	0	1	1	1	1	Gate non-overlapping period setting.
P18	0Ch	0	0	0	0	1	1	0	0	Boosting start setting.
P19	CCh	1	1	0	0	1	1	0	0	Boosting start setting.
P20	CCh	1	1	0	0	1	1	0	0	Boosting start setting.

(14) PWRCTL

This command and the subsequent parameters are used to set output voltages for display. These command and parameters should be entered before SLPOUT.

<command>

Hex	ID7	ID6	ID5	ID4	ID3	ID2	ID1	ID0	Remarks
B1h	1	0	1	1	0	0	0	1	

<parameter>

	Hex	IP7	IP6	IP5	IP4	IP3	IP2	IP1	IP0	Remarks
P1	2Bh	0	0	1	0	1	0	1	1	VCL ON, boost mode, VCL1 setting
P2	00h	0	0	0	0	0	0	0	0	GNDD setting
P3	3Eh	0	0	1	1	1	1	1	0	VCOMH setting
P4	5Ah	0	1	0	1	1	0	1	0	VCOM AMP setting
P5	0Eh	0	0	0	0	1	1	1	0	VGOFFL setting
P6	02h	0	0	0	0	0	0	1	0	Booster clock setting (Normal mode)
P7	CDh	1	1	0	0	1	1	0	1	VCOMH/VCOML AMP, Source AMP(Nor mode)
P8	00h	0	0	0	0	0	0	0	0	Charge recycling setting (Normal mode)
P9	00h	0	0	0	0	0	0	0	0	Charge recycling setting (Normal mode)
P10	02h	0	0	0	0	0	0	1	0	Booster clock setting (Partial mode)
P11	0Bh	0	0	0	0	1	0	1	1	VCOMH/VCOML AMP, Source AMP (Par mode)
P12	00h	0	0	0	0	0	0	0	0	Charge recycling setting (Partial mode)
P13	00h	0	0	0	0	0	0	0	0	Charge recycling setting (Partial mode)
P14	02h	0	0	0	0	0	0	1	0	Booster clock setting (Idle mode)
P15	00h	0	0	0	0	0	0	0	0	VCOMH/VCOML AMP, Charge recycling (Idle mode)
P16	00h	0	0	0	0	0	0	0	0	Charge recycling setting (Idle mode)
P17	02h	0	0	0	0	0	0	1	0	Booster clock setting (Partial-Idle mode)
P18	00h	0	0	0	0	0	0	0	0	VCOMH/VCOML AMP, Charge recycling (Partial-Idle mode)
P19	00h	0	0	0	0	0	0	0	0	Charge recycling setting (Partial-Idle mode)

(15) RGBIF

This command and the subsequent parameters are used to set RGB timing setting. These command and parameters should be entered before SLPOUT.

<command>

Hex	ID7	ID6	ID5	ID4	ID3	ID2	ID1	ID0	Remarks
B2h	1	0	1	1	0	0	1	0	

<parameter>

	Hex	IP7	IP6	IP5	IP4	IP3	IP2	IP1	IP0	Remarks
P1	90h	1	0	0	1	0	0	0	0	RAM access, operate mode, inter face mode
P2	00h	0	0	0	0	0	0	0	0	Display clock setting
P3	02h	0	0	0	0	0	0	1	0	Vertical back porch timing setting
P4	02h	0	0	0	0	0	0	1	0	Vertical front porch timing setting
P5	10h	0	0	0	1	0	0	0	0	Horizontal back porch timing setting
P6	08h	0	0	0	0	1	0	0	0	Horizontal front porch timing setting

Be sure to use the value specified on this table.

(16) MADDEF

This command and the subsequent parameters are used to define the pre-calculation of MADCTL parameter and setting of sync signal polarity.

<command>

Hex	ID7	ID6	ID5	ID4	ID3	ID2	ID1	ID0	Remarks
B8h	1	0	1	1	1	0	0	0	

<parameter>

	Hex	IP7	IP6	IP5	IP4	IP3	IP2	IP1	IP0	Remarks
P1	00h	0	0	0	0	0	0	0	0	
P2	00h	0	0	0	0	0	0	0	0	Display data format setting
P3	00h	0	0	0	0	0	0	0	0	Sync signal polarity

Be sure to use the value specified on this table.

(17) GAMMSET P0

This command and the subsequent parameters are used to set timings for display. These command and parameters should be entered before SLPOUT.

<command>

Hex	ID7	ID6	ID5	ID4	ID3	ID2	ID1	ID0	Remarks
C0h	1	1	0	0	0	0	0	0	Gamma Curve0 Positive Set

<parameter>

	Hex	IP7	IP6	IP5	IP4	IP3	IP2	IP1	IP0	Remarks
P1	00h	0	0	0	0	0	0	0	0	
P2	00h	0	0	0	0	0	0	0	0	
P3	05h	0	0	0	0	0	1	0	1	
P4	0Eh	0	0	0	0	1	1	1	0	
P5	19h	0	0	0	1	1	0	0	1	
P6	24h	0	0	1	0	0	1	0	0	
P7	2Dh	0	0	1	0	1	1	0	1	
P8	3Ah	0	0	1	1	1	0	1	0	
P9	41h	0	1	0	0	0	0	0	1	
P10	41h	0	1	0	0	0	0	0	1	
P11	44h	0	1	0	0	0	1	0	0	
P12	4Bh	0	1	0	1	1	0	1	1	
P13	33h	0	0	1	1	0	0	1	1	

(18) GAMMSET N0

This command and the subsequent parameters are used to set timings for display. These command and parameters should be entered before SLPOUT.

<command>

Hex	ID7	ID6	ID5	ID4	ID3	ID2	ID1	ID0	Remarks
C1h	1	1	0	0	0	0	0	1	Gamma Curve0 Negative Set

<parameter>

	Hex	IP7	IP6	IP5	IP4	IP3	IP2	IP1	IP0	Remarks
P1	03h	00h	0	0	0	0	0	0	0	
P2	03h	00h	0	0	0	0	0	0	0	
P3	00h	05h	0	0	0	0	0	1	0	
P4	0Dh	0Eh	0	0	0	0	1	1	1	
P5	1Bh	19h	0	0	0	1	1	0	0	
P6	2Ah	24h	0	0	1	0	0	1	0	
P7	33h	2Dh	0	0	1	0	1	1	0	
P8	42h	3Ah	0	0	1	1	1	0	1	
P9	4Ah	41h	0	1	0	0	0	0	0	
P10	4Bh	41h	0	1	0	0	0	0	0	
P11	4Fh	44h	0	1	0	0	0	1	0	
P12	54h	4Bh	0	1	0	1	1	0	1	
P13	3Bh	33h	0	0	1	1	0	0	1	

(19) AMPCTL

This command and the subsequent parameter are used to set AMP of VCI1.

<command>

Hex	ID7	ID6	ID5	ID4	ID3	ID2	ID1	ID0	Remarks
CCh	1	1	0	0	1	1	0	0	

<parameter>

	Hex	IP7	IP6	IP5	IP4	IP3	IP2	IP1	IP0	Remarks
P1	00h	0	0	0	0	0	0	0	0	AMP of VCI1 setting

Be sure to use the value specified on this table.

(20) DLS

This command and the subsequent parameter are used to set Source, VCOM and Gate level when display off.

<command>

Hex	ID7	ID6	ID5	ID4	ID3	ID2	ID1	ID0	Remarks
CDh	1	1	0	0	1	1	0	1	

<parameter>

	Hex	IP7	IP6	IP5	IP4	IP3	IP2	IP1	IP0	Remarks
P1	-	0	0	0	0	0	0	P11	P10	

< Settings for each position of Driver IC >

P11	P10	Source	VCOM	Gate
0	0	GND level		
0	1	Undefined		
1	1	OFF level	Operation	

(21) RGBDN

This command and the subsequent parameter are used to set disable VSYNC, HSYNC, ENABLE and PCLK when SLEEP IN state .

<command>

Hex	ID7	ID6	ID5	ID4	ID3	ID2	ID1	ID0	Remarks
CEh	1	1	0	0	1	1	1	0	

<parameter>

	Hex	IP7	IP6	IP5	IP4	IP3	IP2	IP1	IP0	Remarks
P1	-	1	1	1	1	1	1	1	P10	VSYNC, HSYNC, ENABLE and PCLK disable setting

< Settings for each position of Driver IC >

P10	Disable or enable setting
0	VSYNC, HSYNC, ENABLE and PCLK disable
1	VSYNC, HSYNC, ENABLE and PCLK enable

(22) MTPCTL

This command and the subsequent parameter are used to MTP control.

<command>

Hex	ID7	ID6	ID5	ID4	ID3	ID2	ID1	ID0	Remarks
D0h	1	1	0	1	0	0	0	0	

<parameter>

	Hex	IP7	IP6	IP5	IP4	IP3	IP2	IP1	IP0	Remarks
P1	02h	0	0	0	0	0	0	1	0	MTP control

Be sure to use the value specified on this table.

(23) EXTCMMOD1

EXTCMMOD1and EXTCMMOD2 commands and the subsequent parameters are the commands to access level 2 command.

<command>

Hex	ID7	ID6	ID5	ID4	ID3	ID2	ID1	ID0	Remarks
F0h	1	1	1	1	0	0	0	0	

<parameter>

	Hex	IP7	IP6	IP5	IP4	IP3	IP2	IP1	IP0	Remarks
P1	5Ah	0	1	0	1	1	0	1	0	

Be sure to use the value specified on this table.

(24) EXTCMMOD2

EXTCMMOD1and EXTCMMOD2 commands and the subsequent parameters are the commands to access level 2

<command>

Hex	ID7	ID6	ID5	ID4	ID3	ID2	ID1	ID0	Remarks
F1h	1	1	1	1	0	0	0	1	

<parameter>

	Hex	IP7	IP6	IP5	IP4	IP3	IP2	IP1	IP0	Remarks
P1	5Ah	0	1	0	1	1	0	1	0	

Be sure to use the value specified on this table.

3. ABSOLUTE MAXIMUM RATINGS

3.1 ABSOLUTE MAXIMUM RATING

GND=0V

PARAMETER	SYMBOL	RATINGS	UNIT	REMARKS
Power Supply Voltage	VDD	0.0 ~ 4.6	V	*1)
	VDDI	0.0 ~ 4.6	V	*1)
Input Voltage	VIN	0.0 ~VDDI + 0.3	V	*1)
Storage Temperature Range (Ambient Temperature)	TST	-20 ~ 70	℃	no dew condition
Operating Temperature Range (Ambient Temperature)	TOP	-10 ~ 60	℃	
LED Forward Current	IF	30	mA	per chip at 25℃ *2)

*1: On the other hand, For normal operations, it is desirable to use this module under the conditions according to 4. ELECTRICAL SPECIFICATIONS. If LCD modules uses beyond those conditions, malfunctioning of the module can occur and the reliability of the module may deteriorate.

*2: The rating of maximum LED forward current is decreased along the ambient temperature as the following scheme.

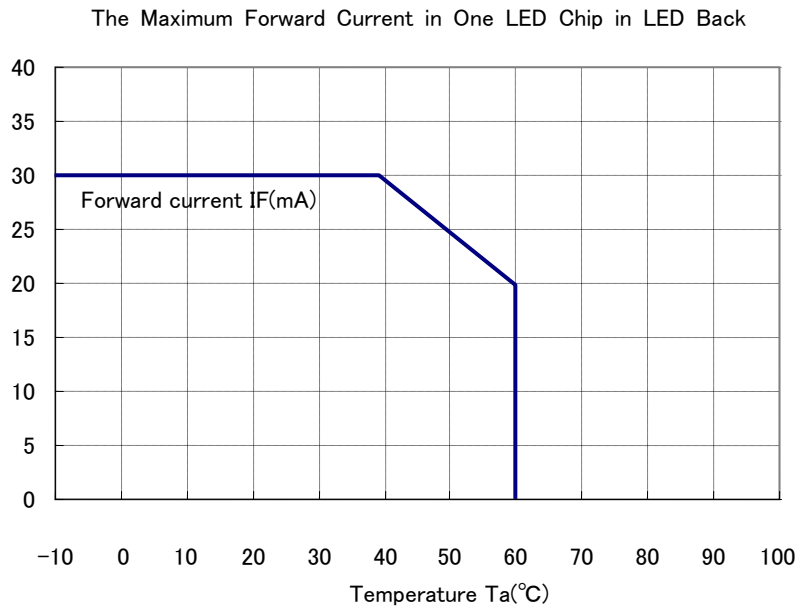

Stress beyond those listed under "ABSOLUTE MAXIMUM RATINGS" may cause permanent damage to the device.

4. ELECTRICAL SPECIFICATION

4.1 DC SPECIFICATIONS

4.1.1 DC Specifications of General Pins

GND = 0 V, Ambient temperature = 25°C unless otherwise specified

Item	Symbol	Condition	Rating			Unit	Pin
			Min.	Typ.	Max.		
Power Supply Voltage *1)	VDD		2.7	3.0	3.3	V	Pin-37,38
	VDDI		2.7	3.0	3.3	V	Pin-36
Low-level input voltage	VIL		0	-	0.2 x VDDI	V	All input pins
High-level input voltage	VIH		0.8 x VDDI	-	VDDI	V	
Input leak current	ILI		-	-	1.0	μA	All input pins except power supply pins
Power supply current (RMS)	IDD	*2)	-	11.5	17.5	mA	VDD
	IDDI		-	1.4	2.5	mA	VDDI

*1: Rated values indicate operating range of electrical functions.

*2: Typ. values are at the condition of power supply voltage is Typ., the ambient temperature is 25°C, full screen color bar which was written according to the timing of "4.3 DISPLAY SIGNAL INPUT TIMING".
Max. values are at the condition of power supply voltage is in a range of "DC specification", ambient temperature is in a range of operating temperature, full screen color bar which was written according to the timing of "4.3 DISPLAY SIGNAL INPUT TIMING".

< Color Bar Display >

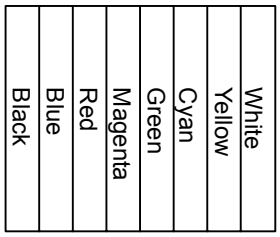

4.1.2 DC Specifications of Back Light

Item	Symbol	Condition	Rating			Unit	Pin
			Min.	Typ.	Max.		
forward current / circuit	IF	Ta=25℃	-	20	-	mA	*
forward voltage / circuit	VF	IF=20mA	-	9.6	10.5	V	Ta=25°C

* Epson Imaging Devices Corporation doesn't specify these ratings.

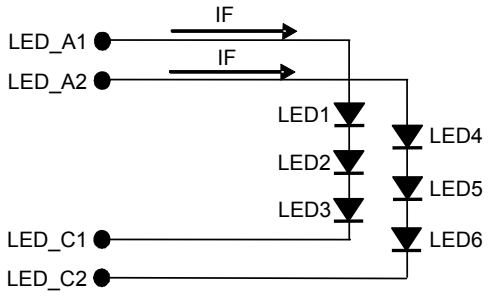

LED forward voltage and current condition

4.2 AC SPECIFICATIONS

4.2.1 Serial Interface Timing

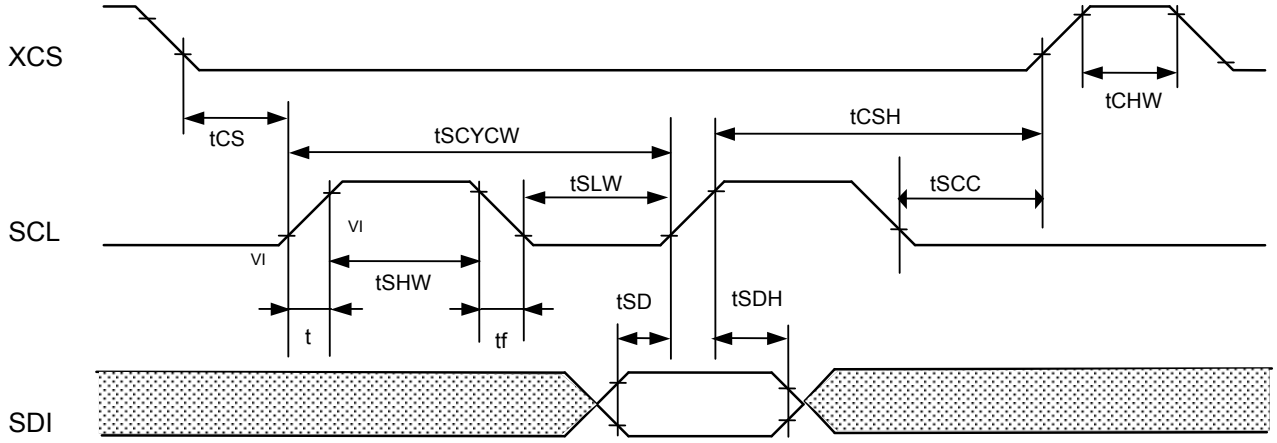

Signal	Symbol	Parameter	Min.	Max.	Unit	Remarks
SCL	tSCYCW	Serial Clock Cycle	200	-	ns	
	tSHW	SCL "H" Pulse Width	85	-	ns	
	tSLW	SCL "L" Pulse Width	85	-	ns	
	tSCC	SCL falling <—> XCS	35		ns	
SDI	tSDS	Data Setup Time	70	-	ns	
	tSDH	Data Hold Time	70	-	ns	
XCS	tCHW	XCS "H" Pulse Width	100	-	ns	
	tCSS	XCS-SCL Time	100	-	ns	
	tCSH		120	-	ns	

Voltage of VDDI is in ranges of 4.1 DC SPECIFICATIONS, ambient temperature is in a range of operating temperature.

*: When both the rising time (tr) and the falling time (tf) of input signals are less than 15 ns.

*: Ratings are specified as intervals by at the voltage of 20% and 80% of VDDI-GND.

4.2.2 Reset Timing

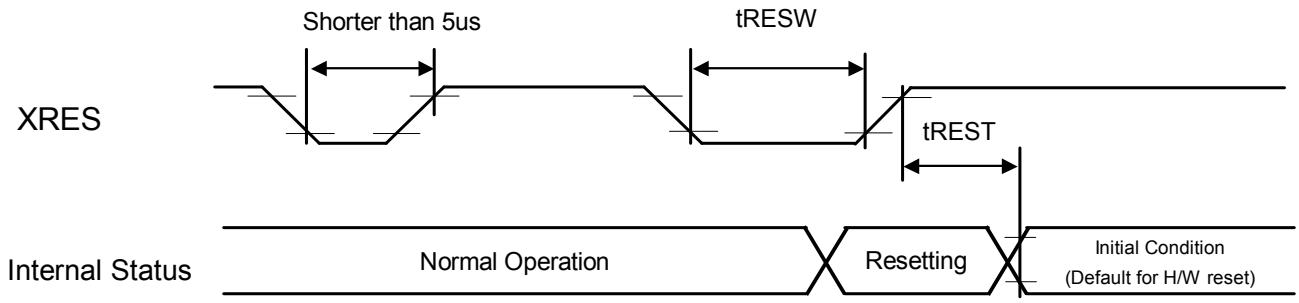

Signal	Symbol	Parameter	Min.	Max.	Unit	Remarks
XRES	tRESW	Reset low pulse width	100	-	μs	
	tREST	Reset complete time	-	200	ms	

Voltage of VDDI is in ranges of 4.1. DC SPECIFICATIONS, ambient temperature is in a range of operating temperature.

*: Ratings are specified as intervals by at the voltage of 20% and 80% of VDDI-GND.

*: Follow it about regulations of 4.4 RECOMMENDED SEQUENCE about reset "L" pulse width when Start to supply system power.

4.2.3 RGB Interface Timing

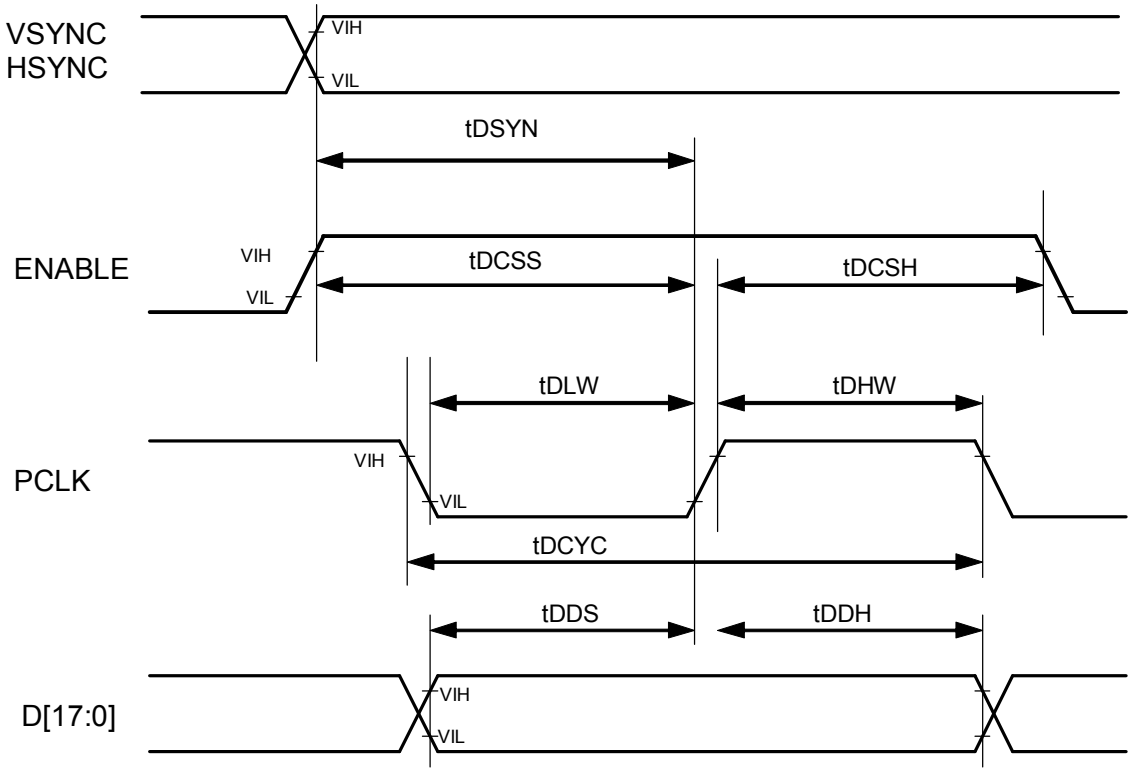

Signal	Symbol	Parameter	Min.	Max.	Unit	Remarks
SYNC	tDSYN	SYNC setup time	40	-	ns	
PCLK	tDCYC	Pixel clock cycle	120	-	ns	
	tDLW	Pixel clock low time	45	-	ns	
	tDHW	Pixel clock High time	45	-	ns	
D[17:0]	tDDS	Data setup time	45	-	ns	
	tDDH	Data hold time	45	-	ns	
ENABLE	tDCSS	ENABLE setup time	45		ns	
	tDCSH	ENBALE hold time	45		ns	

Voltage of VDDI is in ranges of 4.1. DC SPECIFICATIONS, ambient temperature is in a range of operating temperature.

*: When both the rising time (tr) and the falling time (tf) of input signals are less than 15 ns.

*: Ratings are specified as intervals by at the voltage of 20% and 80% of VDDI-GND.

4.3 DISPLAY SIGNAL INPUT TIMING

1) Horizontal Timing

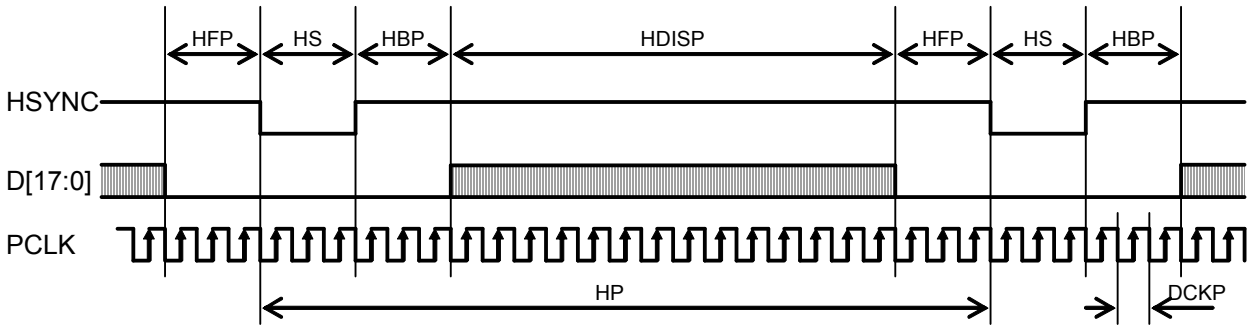

Parameter	Symbol	Min.	Typ.	Max.	Unit	Remarks
HS cycle	HP	-	264	-	CLK	
HS low pulse width	HS	-	8	-	CLK	
Horizontal back porch	HBP	-	8	-	CLK	
HS + HBP	HS+HBP	-	16	-	CLK	
Horizontal front porch	HFP	-	8	-	CLK	
Horizontal active area	HDISP	-	240	-	CLK	
Frame cycle	-	-	60	-	Hz	
Pixel clock Frequency	DCKP	-	6.4	-	MHz	

2) Vertical Timing

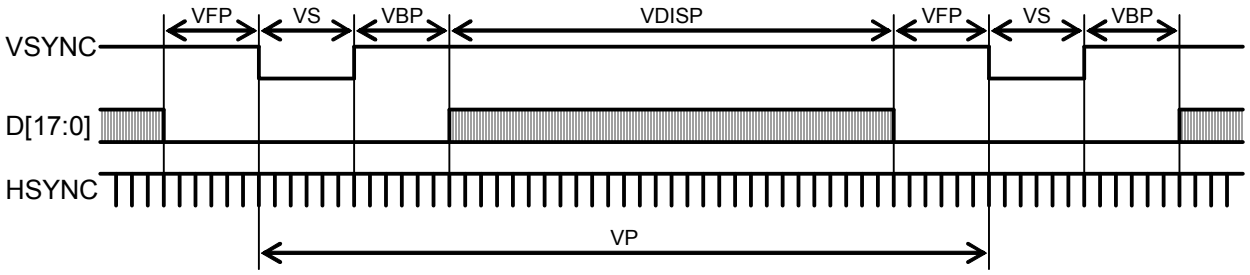

Parameter	Symbol	Min.	Typ.	Max.	Unit	Remarks
Vertical cycle	VP	-	404	-	H	
Vertical Low pulse width	VS	-	1	-	H	
Vertical back porch	VBP	-	1	-	H	
VS + VBP	VS+VBP	-	2	-	H	
Vertical front porch	VFP	-	2	-	H	
Vertical active area	VDISP	-	400	-	H	

4.4 RECOMMENDED SEQUENCE

-1) Start to supply system power.

-2) Make a device reset after starting to supply the system power.
(XRES must be kept "L" for more than 2ms.)

-3) Wait more than 200ms after releasing the system reset *1)

-4) Transfer commands for initial setting and turning on.
(See4.4.1 Power ON Sequence)

-5) Transfer commands to turn off. (See4.4.2 Power OFF Sequence)

-6) Stop to supply system power.

Required intervals are described in the following chart and the table of "4.4.1" to "4.4.2".

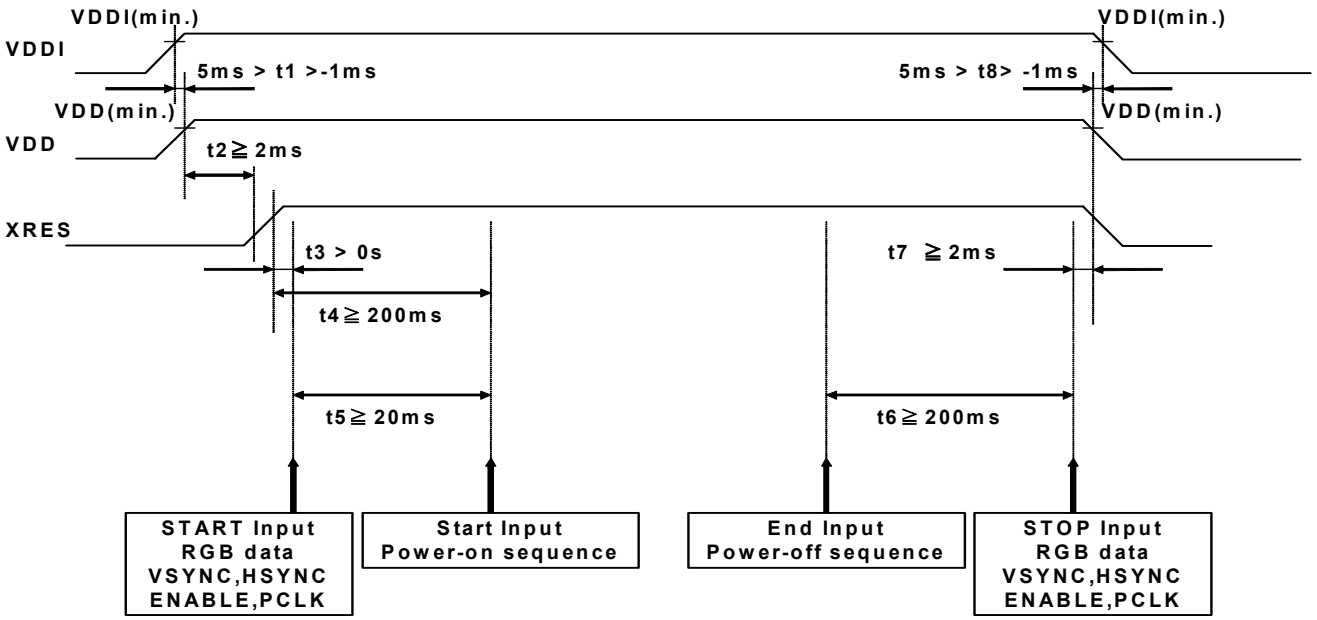

Notes)

* XRES must be maintained to “LOW” more than 2ms after turning on the system power (VDD, VDDI).

* The rising speed of VDD or VDDI should be less than 2V/100µs.

* VDD (min.) and VDDI (min.) are minimum voltage of VDD and VDDI. Please refer to 4.1 DC SPECIFICATIONS.

4.4.1 Power ON Sequence

Power Supply		VDDI=3.0V VDD=3.0V
Hard Reset		
RGB data ,VSYNC ,HSYNC ,ENABLE and PCLK start		
Wait		More than 200ms
EXTCMMOD1	CMD	F0h
	PRM1	5Ah
EXTCMMOD2	CMD	F1h
	PRM1	5Ah
DISCTL	CMD	B0h
	PRM1	29h
	PRM2	23h
	PRM3	23h
	PRM4	23h
	PRM5	02h
	PRM6	2Ah
	PRM7	2Ah
	PRM8	2Ah
	PRM9	02h
	PRM10	26h
	PRM11	26h
	PRM12	26h
	PRM13	B2h
	PRM14	3Fh
	PRM15	55h
	PRM16	07h
	PRM17	0Fh
	PRM18	0Ch
	PRM19	CCh
	PRM20	CCh
PWRCTL	CMD	B1h
	PRM1	2Bh
	PRM2	00h
	PRM3	3Eh
	PRM4	5Ah
	PRM5	0Eh
	PRM6	02h
	PRM7	CDh
	PRM8	00h
	PRM9	00h
	PRM10	02h
	PRM11	0Bh
	PRM12	00h
	PRM13	00h
	PRM14	02h
	PRM15	00h
	PRM16	00h
	PRM17	02h
	PRM18	00h
	PRM19	00h
APMCTL	CMD	CCh
	PRM1	00h
MTPCTL	CMD	D0h
	PRM1	02h
RGBIF	CMD	B2h
	PRM1	90h
	PRM2	00h
	PRM3	02h
	PRM4	02h
	PRM5	10h
	PRM6	08h
COLMOD	CMD	3Ah
	PRM1	06h
GAMSET	CMD	26h
	PRM1	01h

GAMMSETP0	CMD	C0h
	PRM1	00h
	PRM2	00h
	PRM3	05h
	PRM4	0Eh
	PRM5	19h
	PRM6	24h
	PRM7	2Dh
	PRM8	3Ah
	PRM9	41h
	PRM10	41h
	PRM11	44h
	PRM12	4Bh
	PRM13	33h
GAMMSETN0	CMD	C1h
	PRM1	00h
	PRM2	00h
	PRM3	05h
	PRM4	0Eh
	PRM5	19h
	PRM6	24h
	PRM7	2Dh
	PRM8	3Ah
	PRM9	41h
	PRM10	41h
	PRM11	44h
	PRM12	4Bh
	PRM13	33h
PWMENB	CMD	8Ah
	PRM1	01h
ADCCTL	CMD	5Bh
	PRM1	CCh
SSLCTL	CMD	70h
	PRM1	00h
RGBDN	CMD	CEh
	PRM1	FFh
MADCTL	CMD	36h
	PRM1	48h
MADDEF	CMD	B8h
	PRM1	00h
	PRM2	00h
	PRM3	00h
CASET	CMD	2Ah
	PRM1	00h
	PRM2	00h
	PRM3	00h
	PRM4	EFh
PASET	CMD	2Bh
	PRM1	00h
	PRM2	00h
	PRM3	01h
	PRM4	8Fh
SLPOUT	CMD	11h
Wait		More than 200ms
DLS	CMD	CDh
	PRM1	03h
DISON	CMD	29h

4.4.2 Power OFF Sequence

Display On state		
DISOFF	CMD	28h
Wait		More than 40ms
DLS	CMD	CDh
	PRM1	00h
SLPIN	CMD	10h
RGBDN	CMD	CEh
	PRM1	FEh
Wait		More than 200ms
RGB data ,VSYNC ,HSYNC ,ENABLE and PCLK stop		
Power OFF		

5. OPTICAL SPECIFICATIONS

Values in “OPTICAL SPECIFICATIONS“ are provided under the following conditions.

* Frame Frequency : 60Hz
* VDD/VDDI : 3.0V,

5.1 OPTICAL CHARACTERISTICS

5.1.1 Backlight ON (Transmissive Mode)

Ta = 25℃

Item		Symbol	Rating			Unit	Condition	Remarks
			Min.	Typ.	Max.			
Contrast ratio		CR	120	180	-	—	θ = 0°	1(1)
Response time	Rise	tr	-	6	9	ms	θ = 0°	2(1)
	Fall	tf	-	25	37			
Brightness		B	150	200	-	cd/m2	θ = 0°	7(1)
Color Coordinates		Wx	0.26	0.31	0.36	—	θ = 0°	3(1)
		Wy	0.28	0.33	0.38			
		Rx	-	0.53	-			
		Ry	-	0.32	-			
		Gx	-	0.32	-			
		Gy	-	0.53	-			
		Bx	-	0.16	-			
		By	-	0.14	-			
NTSC ratio		-	-	37	-	%	θ = 0°	4(1)
Viewing Angle	φ=0	-	50	60	-	deg.	CR≧10	6(1)
	φ=90		50	60	-			
	φ=180		35	45	-			
	φ=270		35	45	-			
Brightness deviation		-	60	80	-	%	θ = 0°	7(1)

5.1.2 Backlight OFF (Reflective mode)

Ta = 25℃

Item	Symbol	Rating			Unit	Condition	Remarks
		Min.	Typ.	Max.			
Contrast ratio	CR	13	18	-	—	θ = 0°	1(2)
Reflectance	R	5	7	-	%	θ = 0°	5(2)
Color Coordinates	Wx	-	0.31	-	—	θ = 0°	3(2)
	Wy	-	0.33	-			
NTSC ratio		-	9	-	%	θ = 0°	4(2)

5.2 DEFINITIONS AND CONDITIONS

5.2.1 Definitions of Optical Characteristics

Definition 1

Contrast ratio : Contrast ratio is showed by this calculating formula.
CR : Contrast ratio
Lw(White) : Brightness of white raster at standard measurement conditions.
Lb(Black) : Brightness of black raster at standard measurement conditions.

・CR = Lw (White) / Lb (Black)

Definition 2

Responsiveness :

tf: This is a time that increases to 90% of total change of the screen surface brightness from the point of 10%, after data signal is switched from black-raster to white-raster.

tr: This is a time that decreases to 10% of total change of the screen surface brightness from the point of 90%, after data signal is switched from white-raster to black-raster.

・Normally White

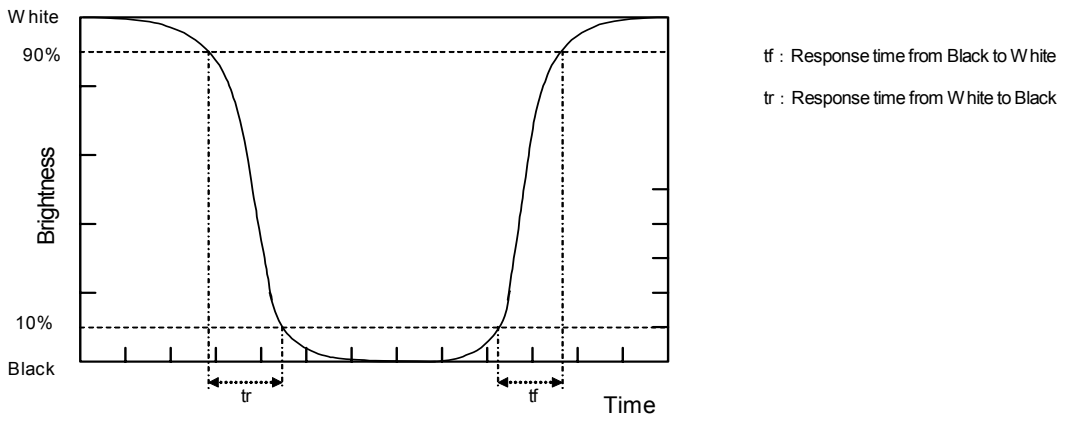

Definition 3

Display screen chromaticity : The R, G, B, W colors are specified by x and y coordinate on the CIE1931

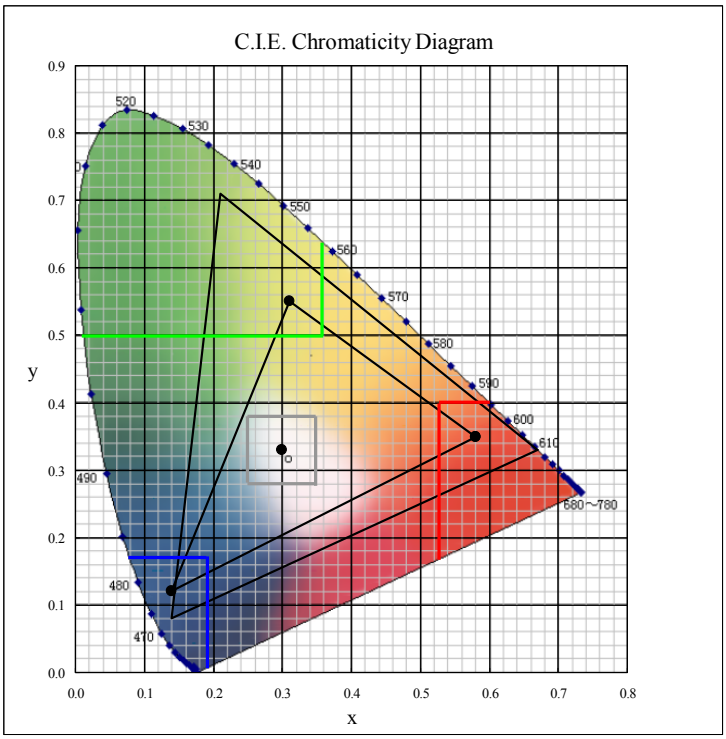

Definition 4

Color area(NTSC ratio) : This is the x-y coordinate of Red, Green, Blue and White colors specified on the CIE1931 chromaticity diagram.

Definition 5

Surface reflectance : Surface Reflectance is showed by this calculating formula.

Lw(White) : Brightness of white raster at standard measurement conditions.

L (Ref) : Brightness of the standard diffusion white board.

・Reflectance = Lw (White) / L (Ref) × 100 (%)

Definition 6

Viewing angle : Viewing angle θ is the angle at which a contrast ratio of at least 10 is obtained when the panel is inclined by θ in the direction of Φ as shown in Fig A.

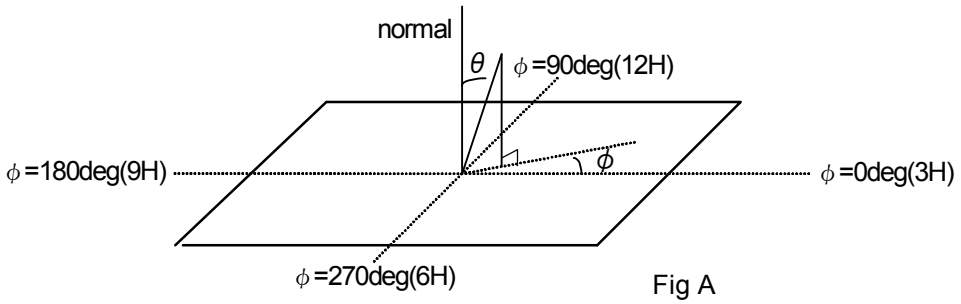

Fig A

Definition 7

Display surface brightness : Screen center brightness of the white raster at standard measurement conditions. (Fig B.)

Brightness uniformity : At points ①-⑨,Brightness uniformity. (Fig B.)
the Min. brightness / the Max. brightness × 100 (%)

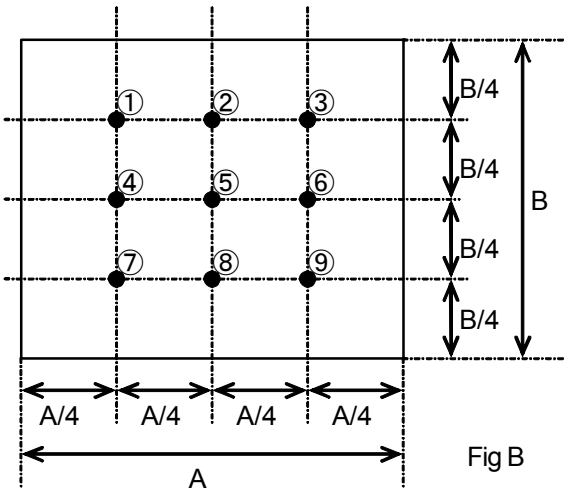

Fig B

5.2.2 Measurement Conditions of Optical Characteristics

[Electrical inputs and adjustments]

Frame Frequency	60Hz
VDD/VDDI	3.0V / 3.0V
Black raster display	R[ ] = G[ ] = B[ ] = 0
White raster display	R[ ] = G[ ] = B[ ] = 63
Saturate color raster display	R[ ], G[ ], B[ ] (one color only) = 63, otherwise = 0
LED forward current	20mA/chip

Condition (1)

[Optical system]

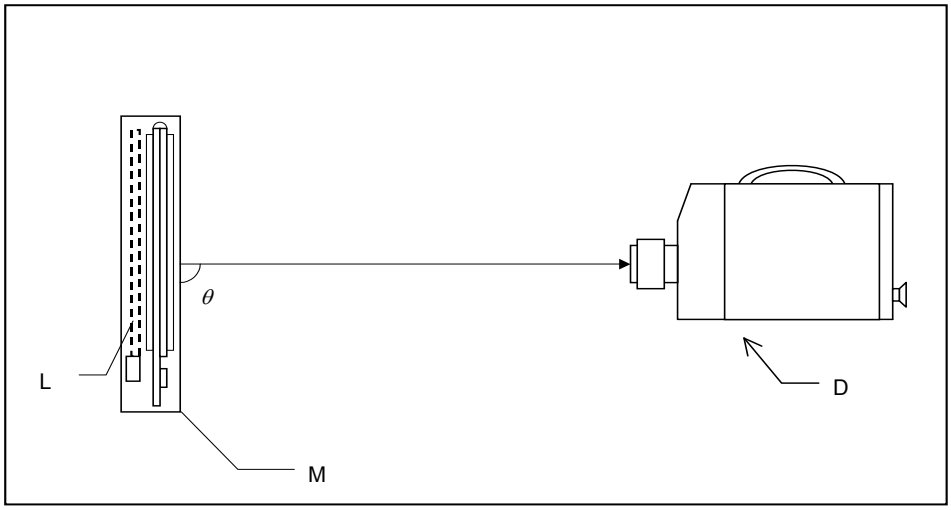

L : Light source mounted to the LCD module(LED Back Light)

M : LCD module

D : Measurement instruments

θ : Measurement angle (=90°)

[Instruments and it's measurement conditions]

Instrument	: Color Luminance meter CS-1000A (KONICA MINOLTA)
Measurement distance	: 50cm
Measurement field angle	: 2°
Measurement point	: The center of the active area. The 9 points of the active area

Condition (2)

[Optical system]

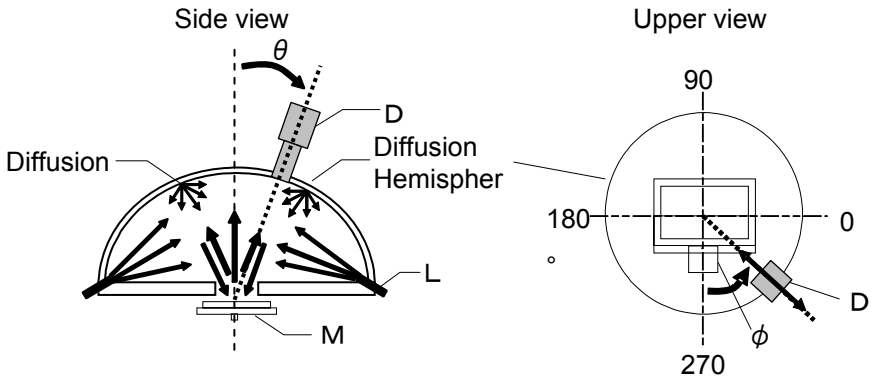

L : Light source

M : LCD module

D : Measurement instruments

θ : Measurement angle (=90°)

[Instruments and it's measurement conditions]

Instrument	: Spectro photometer DMS803 (301) (autronic-MELCHERS)
Measurement distance	: 112mm
Measurement aperture	: 3.0mm
Light Source	: D65

6. INSPECTION STANDARD

6.1 QUALITY STANDARDS

The quality standards are the quality level used to judge whether or not the product lots pass during the acceptance inspections of the products delivered to your company. The quality standards are shown below.

* Inspection method: Compliant with ANSI/ASQL Z1.4-1993, ordinary inspection level II, inspection by one time sampling.

* AQL

Defect type	AQL	Definition
Major defects	0.4%	Accompanied with functional abnormalities
Minor defects	0.65%	Out of the range from "6.2.2 Display appearance standards", but no functional abnormalities

6.2 INSPECTION CONDITON

(1). Emviromental conditions

1. Temperature/humidity condtion : Normal temprature (25±5 degrees)
   Normal humidity (60±20%RH)
2. Iluminance environment : Not lighted appearance 800～2000Lx
   Lighted appearance : Transmissive type 100～ 400Lx
   Semi-Transmissive 800～2000Lx
   * Some specified patterns : 50Lx or the less

(2). Inspection method : Inspection by naked eye

Inspect the screen by naked eye from a distance of about 30 cm and the angle shall be 30 degrees from the vertical direction to the product.

Veiwing angle is 30 degrees from the vertical direction as shown in the picture below.

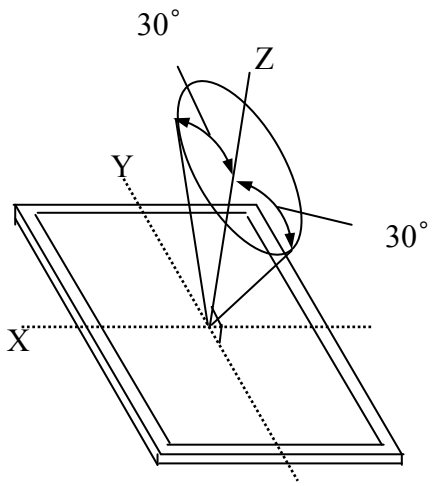

(3). Drive condition : It is done pursuant to product specification.

6.3 APPEARANCE STANDARD

6.3.1 Application Scope

The application scope is limited to the viewing area.

The product should be judged non-defective if all defects are outside of the viewing area and do not interfere with product quality or the assembly process.

6.3.2 Display Appearance Standards

<table>
<tr><th>No.</th><th>ITEMS</th><th>JUDGMENT CRITERIA</th><th>CLASS</th></tr>
<tr><td>1</td><td>Abnormal display</td><td>Must not be abnormal function such as not function or not to get normal pattern for input signal, etc.</td><td>Major defect</td></tr>
<tr><td>2</td><td>Line defect (Open, Short)</td><td>No line defect</td><td>Major defect</td></tr>
<tr><td>3</td><td>Dot defect (Dot failure)</td><td>
<table>
<tr><th>No.</th><th>Item</th><th>Bright dot</th><th>Dark dot</th><th>total</th></tr>
<tr><td>1</td><td>Defect in screen</td><td>1</td><td>3</td><td>3</td></tr>
<tr><td>2</td><td>Combined defect</td><td colspan="2">0</td><td>0</td></tr>
</table>
Distance between dots : D D≧5mm
The smallest one unit R, G or B is defined as one dot.
Less than 60% of one dot area is acceptable.
</td><td>Minor defect</td></tr>
<tr><td>4</td><td>Dot type defect (Black/White)

d = (a + b) / 2</td><td>
<table>
<tr><th>Size d(mm)</th><th>Tolerance</th></tr>
<tr><td>d ≦ 0.1</td><td>ignored</td></tr>
<tr><td>0.1 ＜ d ≦ 0.2</td><td>4</td></tr>
<tr><td>0.2 ＜ d</td><td>0</td></tr>
</table>
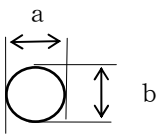

Distance between defects : D D≧5mm
</td><td>Minor defect</td></tr>
<tr><td>5</td><td>line type defect (Black/White)</td><td>
<table>
<tr><th>Length L(mm)</th><th>Width W(mm)</th><th>Tolerance</th></tr>
<tr><td>ignored</td><td>W ≦ 0.02</td><td>ignored</td></tr>
<tr><td>L ≦ 2.0</td><td>0.02 < W ≦ 0.03</td><td>4</td></tr>
<tr><td>L ≦ 2.0</td><td>0.03 < W ≦ 0.05</td><td>3</td></tr>
<tr><td>2.0 ＜ L</td><td>0.05 < W</td><td>Dot type defect</td></tr>
</table>
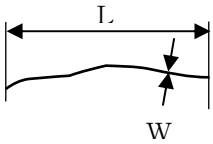

Distance between defects : D D≧5mm
</td><td>Minor defect</td></tr>
<tr><td>6</td><td>Unevenness display</td><td>Should not be remarkable.</td><td>Minor defect</td></tr>
<tr><td>7</td><td>Bubble in polarizer

d = (a + b) / 2</td><td>
<table>
<tr><th>Size d(mm)</th><th>Tolerance</th></tr>
<tr><td>d ≦ 0.2</td><td>ignored</td></tr>
<tr><td>0.2 ＜ d ≦ 0.5</td><td>2</td></tr>
<tr><td>0.5 ＜ d</td><td>0</td></tr>
</table>
Distance between defects : D D≧5mm
</td><td>Minor defect</td></tr>
</table>

6.3.3 General Appearance Specifications

No.	ITEMS	JUDGMENT CRITERIA	CLASS
1	Different specifications	Not permitted	Major defect
2	Damaged resist on FPC	Copper patterns on FPC must not be visible.	Minor defect
3	Circuit pattern	Must not be peeled or separated from FPC.	Major defect
4	Conductive refuses	No solder refuses or solder balls easily moving. Fixed particle which has no functional affect can be ignored.	Minor defect
5	Dirt	Should not be prominent. Dirt on backside is permitted.	Minor defect
6	I/F terminal scratch/dirt	Should not be prominent.	Minor defect
7	Plating	Must not be peeled, no rust and no discoloration.	Minor defect
8	Soldering defect	Solder omissions is not permitted at any solder point. Solder bridges is not permitted. Cold soldering is not permitted.	Major defect Major defect Minor defect
9	Parts soldering	There must be fillet. 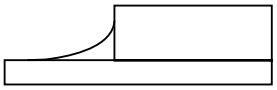	Minor defect
10	Metal frame scratch/discoloration	Scratch out of viewing area and discoloration shall be ignored.	Minor defect

7. WARRANTY

EPSON IMAGING DEVICES CORP. warrants this product for a period of 14 months from the date of delivery.
We replace or compensate for the defective product which is judged as our responsibility within the term of warranty.

8. DURABILITY TESTING

8.1 DURABILITY TESTING CONDITIONS

No.	Item	Condition	Ratings	Evaluation Criteria
1	High-temperature storage	70℃±2℃	240 h	After the test, and 2 hours elapsed at room temperature, it should not be changed in external appearance and/or display appearance that could impair use.
2	Low-temperature storage	-20℃±2℃	240 h	
3	Temperature cycling (Non Operation)	-20℃ ⇔ 25℃ ⇔ 70℃ 30min 10min 30min	50 cycles	
4	High-temperature operation	60℃±2℃	240 h	
5	Low-temperature operation	-10℃±2℃	240 h	
6	High-temperature, high-humidity operation	60℃90%RH	240 h	

8.2 MECHANICAL PERFORMANCE

No.	Item	Condition	Criterion
1	Package drop	According to JIS-Z0202 Height for plane drop : 50 cm Height for corner and ridge drop : 30 cm	There must be no abnormalities of function or display.
2	Package vibration resistance	Vibration Frequency : 5Hz ～ 55Hz Amplitude : 5Hz ～ 20Hz amplitude control 2.5mm^{p-p} 20Hz ～ 55Hz acceleration control 1.5G Sweep Model : Logarithmic Frequency Modulation Sweep Time : 15min per sweep cycle Sweep Direction and Vibrating Time(testing time) X Direction – 30min Y Direction – 30min Z Direction – 30min	

9. PACKING SPECIFICATIONS

< INNER CARTON >

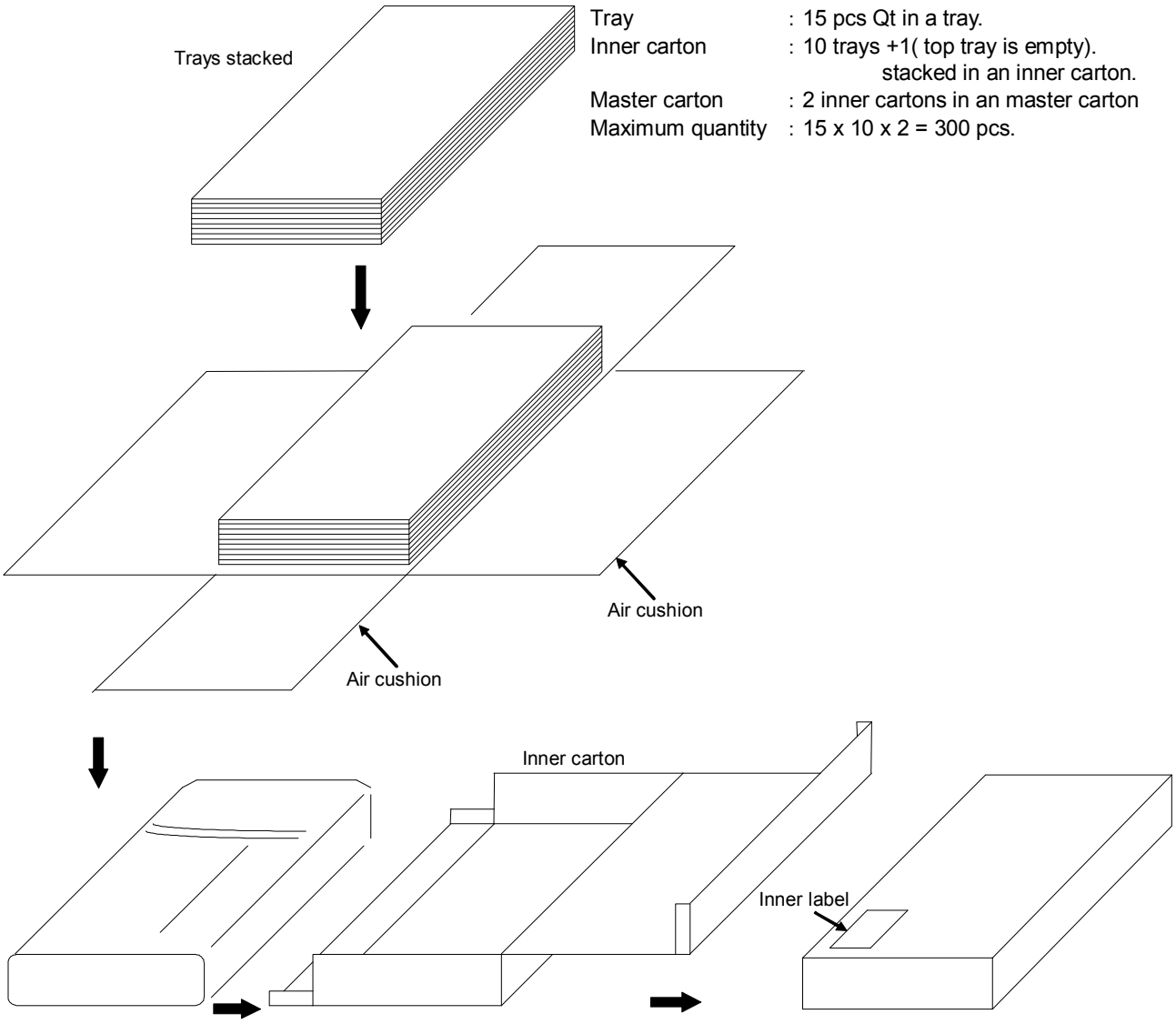

<Contents of the Inner / Master Label>

Product No.	L5S30878P**	
Q'ty pcs		Lot
Customer Product No.		
EPSON IMAGING DEVICES CORP.		

Lot number will be made according to the following format. The lot number has the same description with the printed number on each products. If plural lots are packed together into one package, plural lot numbers must be printed on the inner label.
An empty inner carton should be used to fill the master carton if the total quantity is less than or equal to 150 pcs.

《Lot No.description》

Upper 1st digit : year code

Upper 2nd,3rd digits : week code

Upper 4th digit :day of the week corde

The last digit : factory code

Show a final inspection day.

factory code

S : SUZHOU EPSON CO., LTD. (CHINA)
D : SUZHOU EPSON CO., LTD(D2) (CHINA)
L : EPSON IMAGING DEVICES (PHILIPPINES), INC.
P : EPSON IMAGING DEVICES(H.K.) LTD. (CHINA)
G : INGS SHINANO (JAPAN)

※<Printed Lot number on products>

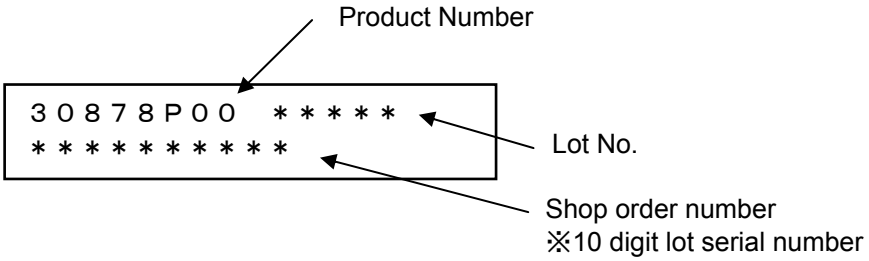

<MASTER CARTON >

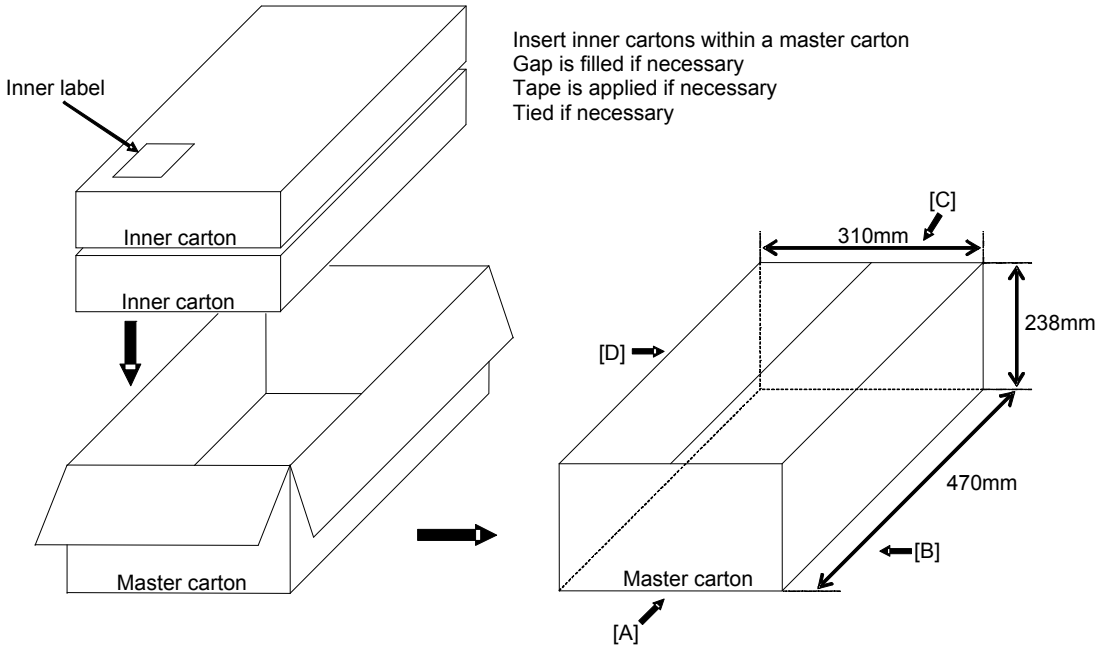

Indication onto [A] [B] [C] [D] on master carton are shown below.

A

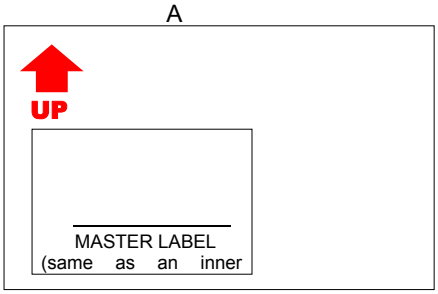

B

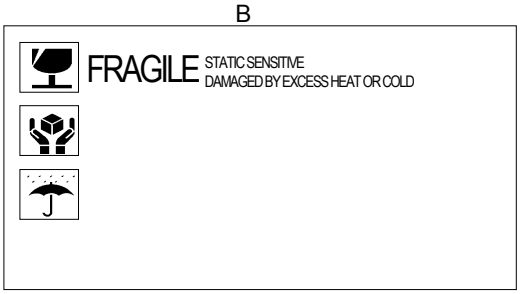

C

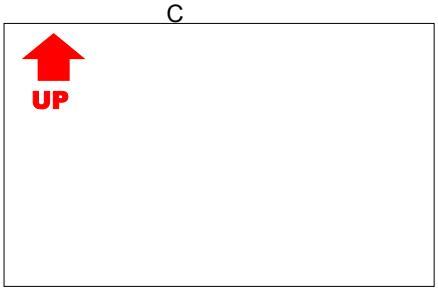

D

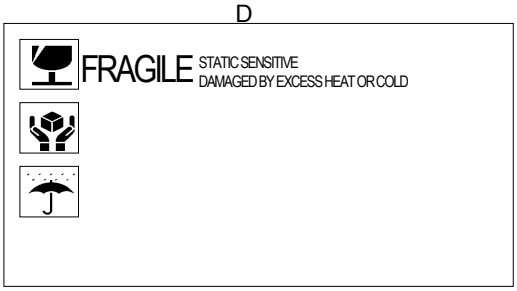

10. LCD MODULE USAGE AND PRECAUTIONS

10.1 DESIGN OF APPLICATION

1) To prevent damage to the module, design applications in consideration of the following:
   - The absolute maximum ratings represent the rated values which the LCD module must not exceed. When modules are used beyond this rating, the operating characteristics may be irreversibly affected.
   - It is recommended that power supply lines [VDD, VDDI] include current surge protection (fuses, etc.). Without such protection, foreign material or isolated circuit failures can cause overheating or smoke emission, resulting in injury.
   - When logic circuit power is off, do not apply any signals to the input terminals.
   - Potentially irreversible abnormality may occur with forcible disconnection of LCD module power supply, such as removing the device battery.
   - Employ designs that avoid direct contact with the IC. In the event there is a chance of contact, please contact Epson Imaging Devices Corp. regarding precautions.
2) To prevent erroneous operation, design applications in consideration of the following:
   - To prevent the occurrence of erroneous operation caused by noise, pay special attention to satisfying specified operating conditions. This includes precautionary measures, like using short signal cables.
   - Note that peripheral devices can cause mutual noise interference with LCD modules. In particular, input devices such as touch panels may emit operational level noise as radiation, even when these devices are not in operation. Provisions for, and evaluation of, performance under actual usage conditions with the system are highly recommended.
   - The driver IC used by the LCD module is easily affected by light exposure because it is mounted as a bare chip on the module. To avoid increased current consumption and accompanied shut-down of power supply, give consideration to taking light-shielding countermeasures, and evaluating performance in the system.
   - Just as with general electronic components, ESD may cause LCD modules to malfunction. ESD countermeasures should be considered around components surrounding the LCD module, especially the driver IC and power IC. When an LCD module is mounted near the outer surface of a product, take extra care that components such as these cannot act as conductive paths for ESD.
   - By command, LCD module operation status and display data is saved, but that data can easily be altered by external noise. Noise should be minimized, or its effect avoided, at the device or system level.
   - As unexpected noise may occur, periodic refresh operations, such as resetting commands or resending display data, are highly recommended as part of the software routine.
   - As display problems can occur when signals are fed to the input/output cable NC terminals, system designs should keep them open.
3) System designs should consider the following:
   - Design applications so that excessive force will not be applied to the surface, perimeter or adjoining areas of LCD modules, as this may cause display panel color tone to vary.
   - Be sure that the LCD module is free from twisting, warping, or distortion as any stress can have great influence on the display quality. Ensure sufficient stiffness of the system's outer case or frame. Also, exercise caution when handling.
   - Use the backlight frame section to set and fix the LCD module position inside the system. Using other components to fix the LCD module position may sever circuits on the FPC.
   - As part of the construction of the LCD module, the FPC board with on-board electronic components is only partly fixed to the case, in consideration of reworking. Potentially, the FPC may curve under the weight of individual components, and they may protrude beyond the outline of the case. As such, preventive measures should be taken to prevent any electrical contact between the LCD module components and other circuits inside the system.
   - The viewing angle of the LCD module and that of the system should match.
   - If a display frame or printed frame is provided, place it inside the viewing area and outside the active area for a good appearance.

4) Liquid crystal display elements are temperature dependent. Be sure to use the LCD modules within the specified operating temperature range, as recognition of the display becomes difficult when the LCD module is used outside its range. Also, keep in mind that the supply voltage necessary for clear image display will vary according to temperature.
5) To avoid EMI, preventive measures should be implemented in the system.
6) Note that sudden powering-up sends excessive inrush current to the LCD module, and can affect the entire system.

10.2 ASSEMBLY PRECAUTIONS

1) Static electricity can destroy LCD module elements, so carefully observe the following during assembly:
   - Be sure to ground your body when handling the LCD module.
   - Make sure that solder guns and all other tools required for assembly have been grounded.
   - The use of anti-static mats (0.5kÙ – 1MÙ) on the workbench for grounding is recommended.
   - To reduce occurrence of static electricity, avoid using this product in dry environments, (less than 50%RH).
   - To eliminate static electricity, the use of an ionizer (anti-static air blower) is recommended.
   - A protective film has been attached to the surface of the LCD panel. When peeling off the protective film, do so carefully near an ionizer.
   - To guard against performance degradation of the LCD module caused by destructive forces such as static electricity, etc., avoid direct contact to the terminal electrodes of connectors and FPC circuit pattern when handling.
2) In the inspection process, design and assemble structures that ensure sufficient light-shielding measures for the LCD driver.
3) The LCD Panel surface is protected by a protective film, which must be removed before system installation. Units having been in prolonged storage may have some adhesive residue left on the display panel. In such cases, please remove the contaminant according to the procedure in item 5) under "9.3 Handling Precautions" below.
4) As removing the LCD module’s protective film makes the polarizer susceptible to the adhesion of foreign material, do so immediately prior to assembly.
5) Exercise caution when applying adhesive to the LCD module as it is difficult to remove.
6) Do not touch or handle the LCD module directly with bare hands as residue of dirt, oil or water can cause corrosion. Be sure to wear finger stalls or gloves when handling LCD modules.
7) Handle LCD modules by their edges. Handling the screen directly can cause display problems or cracks in the panel.
8) When installing the LCD module, don't forcibly bend or stretch the input/output cable. Bending or twisting the FPC section may damage circuit patterns. Applying any excessive stress to the LCD module can damage it.
9) Do not apply pressure to the LSI chip or surrounding mold area as it can cause damage.
10) Do not use sharp, pointy or rigid tools when handing LCD panels. These objects can scratch or nick the glass panel, which can cause it to crack.
11) Perform the LCD module power on/off of the system assembly inspection according to the procedure in the specification document.
12) Do not allow non-atmospheric, specialty gases to contact with the LCD module. Check plastic or rubber materials to be used in the system beforehand as gas they produce can cause functional degradation of internal components like the LCD panel polarizer.
13) Trays are used to package LCD modules for shipment. If LCD modules scratch the tray during shipment, tray material may be left on LCD modules. In such case, it may be necessary to air-clean the LCD modules, but take care not to use excess air pressure or apply air flow in the same area for too long as this can peel off attached tape.

10.3 HANDLING PRECAUTIONS

1) The display panel is made of glass. Do not subject it to mechanical shock such as dropping it from a high position, etc.
2) If the display panel is damaged and internal liquid crystal substance leaks out, be sure not to inhale or consume it. Direct contact with skin should also be avoided. Should contact with the internal liquid crystal substance occur, promptly apply the following responses:
   - Contact with clothing: Remove affected items
   - Contact with skin: Wash off using soap and running water
   - Contact with eyes: Wash out for 15 min. or longer with clean water then consult a physician
   - Ingestion: Induce vomiting with water and consult a physician
3) Take precautions in handling the LCD module because the glass plate has very keen edges. Should it break, take extra care to avoid injury from chips, shards and flying glass.
4) The polarizer covering the display panel surface of the LCD module is soft and can be easily scratched. Handle this polarizer carefully, avoiding contact with sharp, pointy instruments or stiff cloth.
5) If the polarizer surface becomes contaminated, use the following recommended or equivalent adhesive tape for contaminants removal:
   - Scotch-brand mending tape (No. 810)
6) Do not breathe on the display surface or use ethyl alcohol solvent for contaminant removal. This can cause cloudiness in the polarizer surface. Furthermore, do not use the following as they can damage the polarizer:
   - Water
   - Ketones
   - Aromatic solvents
7) Avoid using the LCD module under condensation or high-humidity environments as this may cause polarizer or other functional degradation.
8) After being in a high-humidity or condensation environment, keep the LCD module at room temperature more than 30 minutes before using.
9) Current flow in a condensation or high-humidity environment can cause corrosion of electrodes. Also, take precautions against water getting inside the LCD module as it can cause damage.
10) Liquid crystal freezes when stored below the storage temperature range and such freezing may cause orientation defects or bubbles (black or white) to appear in the LCD panel. Bubbles may also occur if the panel receives an impact in a low-temperature environment.
11) If the LCD module is left operating for a long time with the same display showing, the displayed pattern may leave traces on the screen or the contrast may become inconsistent.
12) As optimal operating voltage of the LCD module depends on the surrounding temperature, operation in a high-temperature environment may cause slight flickering.

10.4 DISASSEMBLY AND MODIFICATION

1) Do not attempt to disassemble or modify the LCD module. The internal construction of the LCD module is susceptible to shock, and foreign material or damage can cause screen loss. Epson Imaging Devices Corp. shall not be responsible in the event that a customer attempts to disassemble or modify the LCD module.

10.5 STORAGE

1) When storing LCD modules, avoid the following conditions or environments:
   - Exposure to direct sunlight or fluorescent lighting.
   - High-temperature/high-humidity or very low-temperature (below 0°C) environments.
   - Exposure to water droplets, condensation, etc.

   Furthermore, keep LCD modules in anti-static bags to prevent static electricity charge ups. Whenever possible, LCD modules should be stored in the same conditions in which they were shipped from Epson Imaging Devices Corp. When doing so, ensure there are no water droplets, or condensation.
2) Take precaution to minimize corrosion of electrodes. Corrosion of electrodes is accelerated by moisture, condensation or a current flow in a high-humidity environment.

3) Recommended storage conditions:
   - Storage environment : +15 ºC to 35 ºC, less than 65%RH
   - Duration: up to 2 months after shipping date
4) The shipping cartons must not be stacked up over 1.8m in height.

10.6 DISPOSAL

1) When disposing of LCD modules, consult companies authorized to handle industrial waste treatment. When incineration is the method of LCD module disposal, relevant environmental legislation must be observed.

10.7 OTHERS

1) This product is designed to be used in general electronic devices (such as office equipment, telecommunications equipment, home electronics, or video game devices). Do not use this product in applications that require an extremely high level of reliability and safety, especially in devices that may cause direct bodily damage to end users (such as equipment for aerospace, traffic control, nuclear, medical, life-support, or safety use).
2) Epson Imaging Devices Corp. shall not be responsible for defects that occur in this product or in equipment connected to this product if the product is used in an environment that exceeds the ranges specified in this document, or in an environment not described in this document.
3) Use this product within the scope of conditions and precautions set forth in this document. Even when used according to guidelines ensure sufficient safety at a system and design level to avoid the operation of this product becoming the cause of personal injury, fire or wider damage.

11. CHANGES

- Specification, cosmetic, specified components, circuit and design improvements may be carried out without prior notification. Design changes that are judged to have an impact on this specification document will be notified prior to implementation.

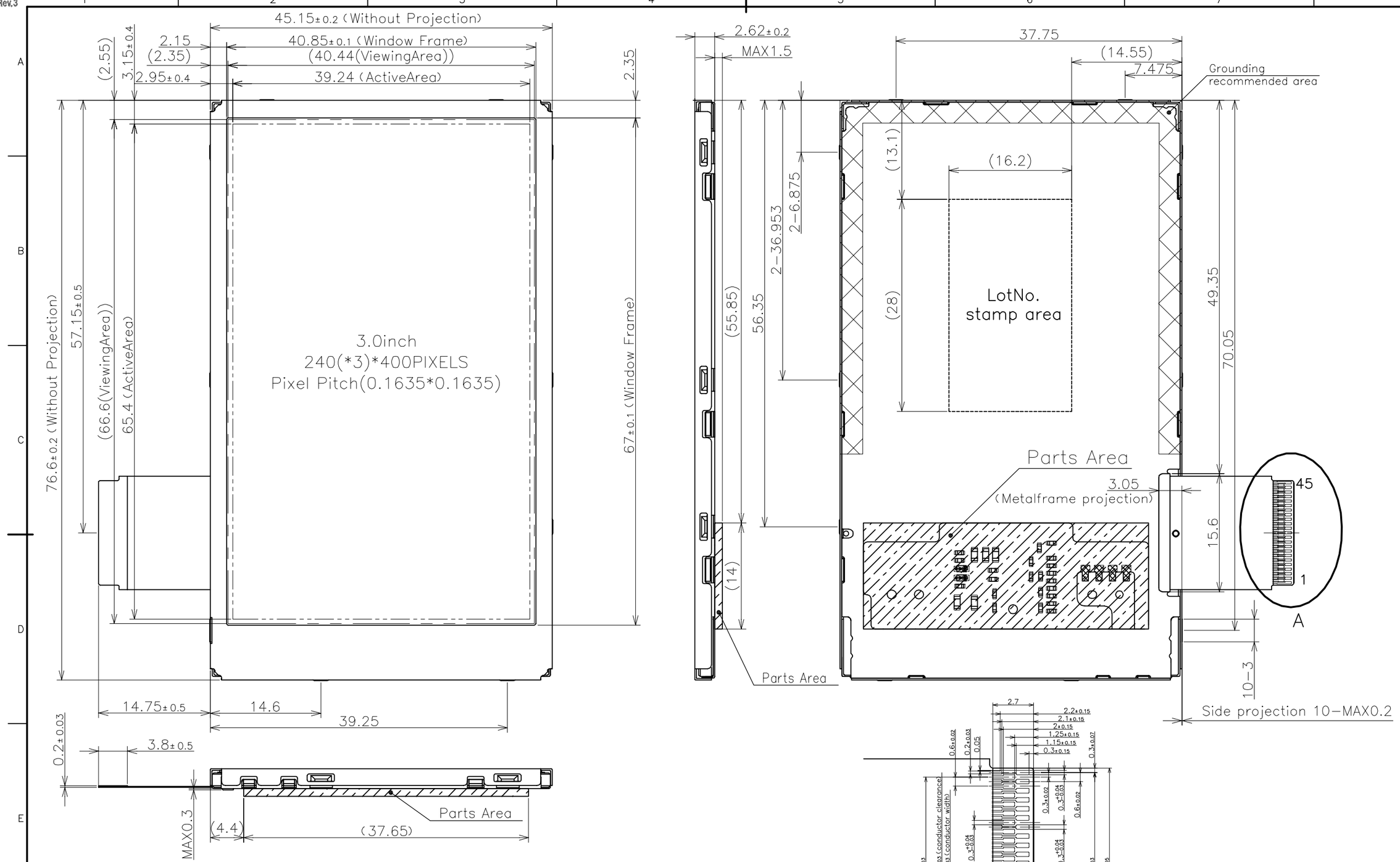

No	I/F Terminal
01	LED_C2
02	LED_C1
03	LED_A2
04	LED_A1
05	NC
06	GND
07	D0
08	D1
09	D2
10	D3
11	D4
12	D5
13	D6
14	D7
15	D8
16	D9
17	D10
18	D11
19	D12
20	D13
21	D14
22	D15
23	D16
24	D17
25	XRES
26	ENABLE
27	GND
28	PCLK
29	GND
30	HSYNC
31	VSYNC
32	NC
33	SDI
34	XCS
35	SCL
36	VDDI
37	VDD
38	VDD
39	NC
40	GND
41	GND
42	NC
43	NC
44	NC
45	NC

Note:
1.Module total height is measured in the pressed state.
2.Cosmetic imperfection will be allowed outside the V.A.(Viewing Area).
3.As a preventive method of ESD, the metal frame shall be connected with Handset's GND plane.
4.( ):Reference dimension.
5.Use the hatching area, If the metal frame is connected to GND.
6.Metal frame Tiebar cut department exists in both sides 4 corner neighborhood. Here besides than deciding large it that burr occurs Metal Frame pressing process is designed and controlled in such way that when burrs occurred,Burrs' height should be controlled less than 30um
7.Do not scale this drawing.

SCALE 2/1	UNIT mm
TOL.−SIZE ±0.3	TOL.−ANGLE −
DATE 2009/02/09	
PRODUCT NO. L5S30878P00	
DWG NO. P065982−11−00	
TITLE Outline Drawing	

EPSON IMAGING DEVICES CORP.