To :

Specification of FUJITSU TFT-LCD module

FLC43XWC8V-02

Approval
Date :
By :

This Product is designed, developed and manufactured as contemplated for general use, including without limitation, general office use, personal use, household use, and ordinary industrial use, but is not designed, developed and manufactured as contemplated for use accompanying fatal risks or dangers that, unless extremely high safety is secured, could lead directly to death, personal injury, severe physical damage or other loss (hereinafter "High Safety Required Use"), including without limitation, nuclear reaction control in nuclear facility, aircraft flight control, air traffic control, mass transport control, medical life support system, missile launch control in weapon system. If customer's product possibly falls under the category of High Safety Required Use, please consult with our sales representatives in charge before such use. In addition, FDTC shall not be liable against the customer and/or any third party for any claims or damages arising in connection with the High Safety Required Use of the Product without permission.

Specification No. : Tech Bes LCD-00149

Issue Date : Dec. 5, 2002

Issued by :

F. Yamada
Director
Products Engineering Dept.
LCD Products Div.

FUJITSU DISPLAY TECHNOLOGIES CORPORATION

REVISION HISTORY

Revision	Date	Prepared	Checked		Approved	Summary
01A	Jul. 12, 2002	H. Takahashi			F. Yamada	1st issue
02B	Oct. 11, 2002	S. Sekido			F. Yamada	Change gasket location and constant number of fuse
03B	Oct. 25, 2002	K. Yonemura			F. Yamada	Change gasket location (3 locations)
04B	Nov. 12, 2002	S. Sekido			F. Yamada	Change gasket location (2 locations)

DOCUMENT CONTROL SECTION

DATE

EDIT	DATE	DESIG.	CHECK	APPR.	DESCRIPTION
04	20021205	Sekido	Takahashi	Yamada	Revise p2, 6, 7, 8, 16, 21 and add p22
03	20020924	Takahashi		Yamada	Revise p3,8,20,21
02	20020807	Takahashi		Yamada	Revise p4,6,8,12-13,15,17,32-33 add p14
DESIG.	20020712	Takahashi	CHECK		APPR. Yamada

FLC43XWC8V-02

Tech Bes LCD-00149

CUST.

FUJITSU DISPLAY TECHNOLOGIES CORPORATION

TABLE OF CONTENTS

1.APPLICATIONS 3
2.PRODUCT NAME AND MODEL NAME
2-1.Product Name 3
2-2.Model Name 3
3.OVERVIEW 3
4.CONFIGURATION 3
5.MECHANICAL SPECIFICATIONS 4
6.ABSOLUTE MAXIMUM RATINGS 5
7.RECOMMENDED OPERATING CONDITIONS 5
8.ELECTRICAL SPECIFICATIONS 6
9.OPTICAL SPECIFICATIONS 8
10.INTERFACE SPECIFICATIONS
10-1.Signal descriptions 12
10-2.Color Data Assignment 15
10-3.Input Signal Timing 16
10-4.Correspondence between Data and Display Position 18
10-5.Power Supply Sequence 18
11.BACKLIGHT SPECIFICATIONS
11-1.Pin Configuration for Backlight 19
11-2.CCFL 19
11-3.Life 19
11-4.Lamp Assembly Set (for Replacement) 19
12.APPEARANCE SPECIFICATIONS
12-1.Zone 20
12-2.Bright Spot 20
12-3.Test Condition 20
12-4.Standard 20
13.ENVIRONMENTAL SPECIFICATIONS 23
14.INDICATIONS 24
15.PACKAGING 24
16.WARRANTY 29
17.PRECAUTIONS 29
18.PRECAUTIONS FOR USE 32
19.MISCELLANEOUS 32

DOCUMENT CONTROL SECTION

DATE

EDIT	DATE	DESIG.	CHECK	APPR.	DESCRIPTION
04	20021205				Total revision

DESIG. CHECK APPR.

FLC43XWC8V-02

Tech Bes LCD-00149 CUST.

FUJITSU DISPLAY TECHNOLOGIES CORPORATION

1. APPLICATIONS

This specification is applied to the 17.0 in. XGA-WIDE supported TFT-LCD module.

2. PRODUCT NAME AND MODEL NAME

2-1. Product Name : LCD Module

2-2. Model Name : FLC43XWC8V-02

3. OVERVIEW

This LCD module has a TFT active matrix type liquid crystal panel 1280×768 pixels, and diagonal size of 43cm (17.0-inch). This module supports 1280×768 XGA-WIDE mode (Non-interlace).

This LCD has a XGA-WIDE-capable 1ch-LVDS interface and can display 16 million colors.

By timing control signal, images are displayed on the screen at given value under specified timing.

Control signals to this LCD module are ENAB (Data enable signal), DCLK signal and RGB data signal. Data signal is transmitted with single port. (8 bit for each R, G, B)

The power supply of this LCD module is +5V DC. This module has the characteristics that apply to TCO'99. ③

4. CONFIGURATION

This LCD module consists of a color TFT-LCD panel that mounted with TFT driver ICs, a cold-cathode fluorescent tube back-light, a LVDS interface PCB, a structure and a bezel. And these components are integrated in a LCD module.

Cold-cathode fluorescent tube and lamp holder are replaceable.

Fig.4-1 shows a block diagram of this LCD module.

DOCUMENT CONTROL SECTION

DATE

EDIT	DATE	DESIG.	CHECK	APPR.	DESCRIPTION
03	20020924				Add ③ (application of TCO'99)

DESIG. CHECK APPR.

FLC43XWC8V-02

Tech Bes LCD-00149 CUST.

FUJITSU DISPLAY TECHNOLOGIES CORPORATION SHEET 3 /

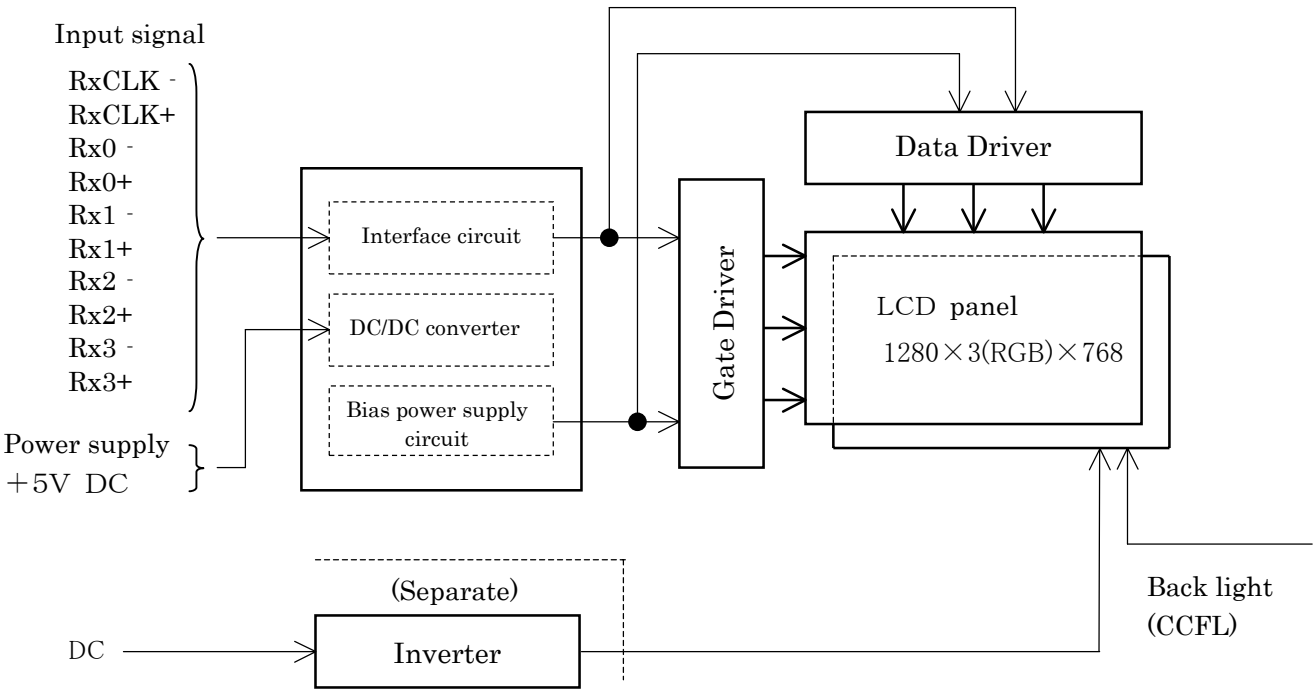

Figure 4-1. Block Diagram

5. MECHANICAL SPECIFICATIONS

Table 5-1 shows the mechanical specifications of this LCD module.

Table 5-1. Mechanical Specifications

Item	Specifications	Unit	Remark
Dimensions	413.8×263.5×18.4(TYP.)	mm	Edge type backlight is used. (ϕ2.6 CCFL×4) Outward Appearance is shown at page 32 and 33.
Display Resolution	(1280×3) ×768	—	
Display Dot Area	369.6×221.76	mm	
Dot Pitch	(0.09625×3) ×0.28875	mm	
Aspect Ratio	1 : 1	—	
Weight	2,000 max	g	
FG-SG	Short circuit	—	

6. ABSOLUTE MAXIMUM RATINGS

Table 6-1 shows the absolute maximum rating of this LCD module.

Table 6-1. Absolute Maximum Ratings

Item	Symbol	MIN.	TYP.	MAX.	Unit
Supply Voltage	V_{CC}	−0.3	—	6.0	V
Input Voltage	V_{IN}	−0.3	—	Vcc+0.3	V

7. RECOMMENDED OPERATING CONDITIONS

Table 7-1 shows the recommended operating conditions of this LCD module.

Table 7-1. Recommended Operating Conditions

Item	Symbol	MIN.	TYP.	MAX.	Unit
Supply Voltage	V_{CC}	4.75	5.0	5.25	V
Ripple Voltage (Vcc)	V_{RP}	—	—	100	mVp-p

8. ELECTRICAL SPECIFICATIONS

Table 8-1 shows the electrical specifications of this LCD module.

Table 8-1. Electrical Specifications

Item		Symbol	Condition	MIN.	TYP.	MAX.	Unit	Remark
Supply Current		I_{CC}	V_{CC}=+5.0±0.25V Vss=0V DCLK=32.498MHz	—	~~(600)~~ 680④	~~(1000)~~ 900④	mA	*1
"H" Level Logic Input Voltage		V_{IH}		0.7×Vcc	—	V_{CC}+0.3	V	*2
"L" Level Logic Input Voltage		V_{IL}		GND	—	0.3×Vcc	V	*2
BACK LIGHT *3	CCFL Turn on Voltage	V_S	f_L=50kHz, Ta=25ºC	—	1230	1600	Vrms	
			f_L=50kHz, Ta=0ºC	—	—	1600		
	Lighting Voltage	V_L	f_L=50kHz I_L=10.5mA	590	630	670	Vrms	*4
	Lighting Frequency	f_L	V_L=~~580~~Vrms 630④	40	50	60	kHz	
	Tube Current	I_L	f_L=50kHz V_L=~~580~~Vrms 630④	9.5	10.5	11.0	mArms	*4

(*1) Typical current value is measured when gray scale (vertical 256 levels) is displayed at Vcc=5.0V.
Maximum current value is measured when stripes with respect to each RGB dot are displayed at Vcc=5.0V.
Without rush current.

(*2) Timing control circuit input voltage

(*3) Backlight specifications are valid when using a suitable inverter such as the "FLCV-15" of FDTC.

(*4) Tube current (I_L) shows the value of the current and voltage that is consumed at one lamp. (4 tubes/unit)
This LCD module has 4 lamps. Each 2 lamps are placed at upper and lower side of the display.
2 lamps are connected in parallel. Each low voltage terminals (GND side) are bound into 1 line cable.
(See 11-1. Pin configuration for backlight)

DOCUMENT CONTROL SECTION

DATE

EDIT	DATE	DESIG.	CHECK	APPR.	DESCRIPTION
04	20021205				Change the values of ④ parts
02	20020807				Correct backlight spec.

DESIG. CHECK APPR.

FLC43XWC8V-02

Tech Bes LCD-00149 CUST.

FUJITSU DISPLAY TECHNOLOGIES CORPORATION SHEET 6 /

Note 1) Measurement Circuit

Based on Fig.8-1.

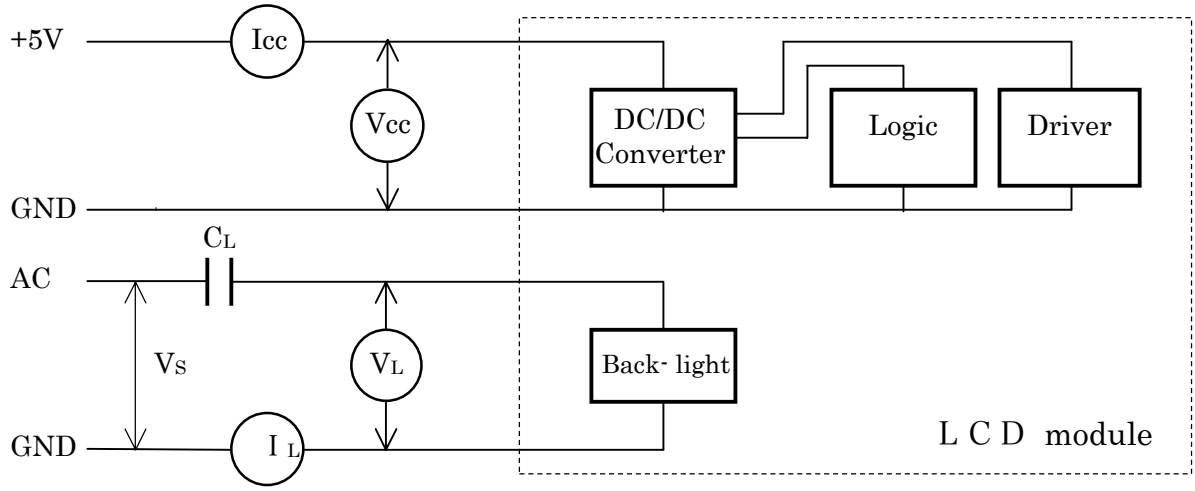

Fig.8-1. Measurement Circuit

Note 2) Equivalent Circuit

Based on Fig.8-2 (a), (b).

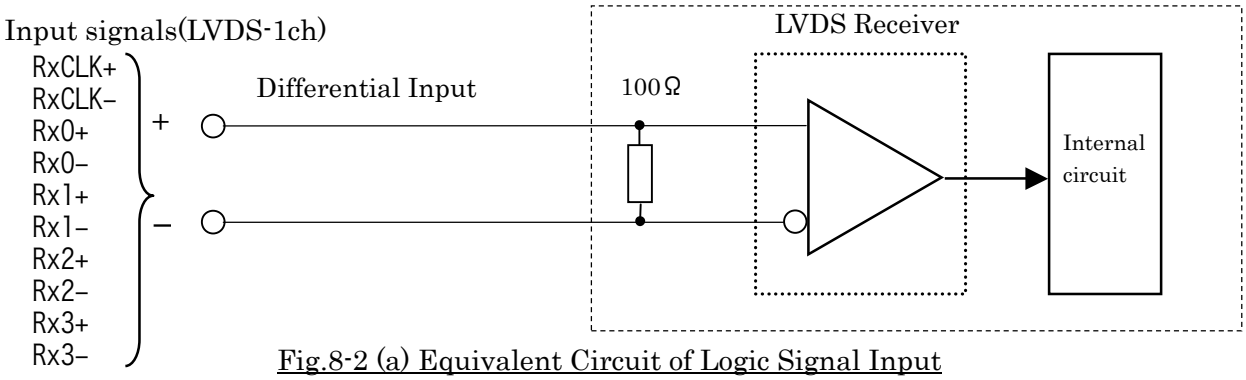

Fig.8-2 (a) Equivalent Circuit of Logic Signal Input

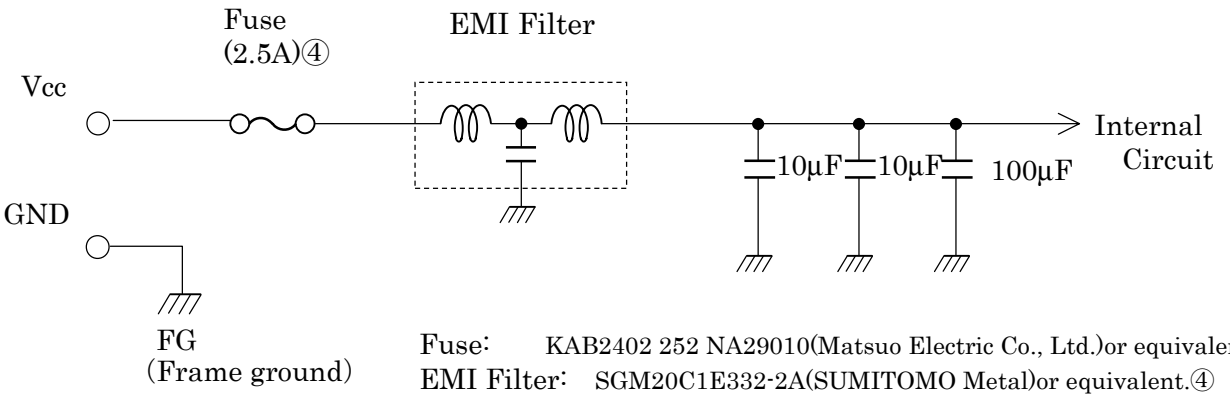

Fuse: KAB2402 252 NA29010(Matsuo Electric Co., Ltd.)or equivalent.④
EMI Filter: SGM20C1E332-2A(SUMITOMO Metal)or equivalent.④

Fig.8-2 (b) Equivalent Circuit of Power Supply

DOCUMENT CONTROL SECTION

DATE

EDIT	DATE	DESIG.	CHECK	APPR.	DESCRIPTION
04	20021205				Add ④parts inFig.8-2(b)

DESIG. CHECK APPR.

FLC43XWC8V-02

Tech Bes LCD-00149 CUST.

FUJITSU DISPLAY TECHNOLOGIES CORPORATION SHEET 7 /

9. OPTICAL SPECIFICATIONS

Table 9-1 shows the optical specifications of this LCD module.

Table 9-1. Optical Specifications Ta=25°C

Item		Symbol	Condition		Specifications MIN.	Specifications TYP.	Specifications MAX	Unit	Remark	Note
Visual Angle	Horizontal	$\theta_{L,R}$	CR≥10	$\theta_{U,D}$=0°	85	—	—	deg		(1)(2)(3)(5)(6)
	Vertical	$\theta_{U,D}$		$\theta_{L,R}$=0°	85	—	—	deg		
Contrast Ratio		CR	$\theta_{L,R,U,D}$=0°		~~210~~ 350②	600	—	—	White/Black	(1)(2)(3)(5)
Response Time(ON) (B→W)		t_{on}	$\theta_{L,R,U,D}$=0°	Ta=25°C	—	15	30	ms		(1)(4)(5)
				Ta=0°C	—	50	100	ms		
Response Time(OFF) (W→B)		t_{off}	$\theta_{L,R,U,D}$=0°	Ta=25°C	—	10	25	ms		
				Ta=0°C	—	50	100	ms		
Brightness		I	$\theta_{L,R,U,D}$=0° V_{CC}=5V, I_L=10.5mA (at maximum brightness)		~~400~~ 350③	~~500~~ 450③	—	cd/m²	White *1	(1)(5)
Brightness Uniformity		ΔI			~~70~~ 75④	—	—	%		(1)(5)(7)
Chromaticity	W	X			0.283	0.313	0.343	—		(1)(5)
		Y			0.299	0.329	0.359	—		
	R	(x, y)		Red	0.65, 0.34 Typ.					
	G			Green	0.30, 0.59 Typ.					
	B			Blue	0.15, 0.14 Typ.					
② γ-curve		γ			2.4 Typ.					
LCD Panel Type					TFT Color					
Display Mode					Normally Black VA					
Wide Viewing Angle Technology					MVA-Premium					
Optimum Viewing Angle					— (symmetry)					(6)
Display Color					16 million (each 6-bit+2-bit FRC)					
Color of non-display area					Black					
Surface Treatment					Anti-glare (Haze value:25%, 3H(at weight of 300g))					

(*1) Specified value is measured in 20~30 minutes after lighting on (LCD module single).
A required value may not be achieved on condition that LCD module is built in the cabinet because of its radiation.

(Note1) ・CS-1000 (MINOLTA Co., Ltd.) , BM-5A(Topcon) or equivalent luminance colorimeter should be used for the measurement.
Field=2°, L=500mm
・The specified value of viewing angle, contrast, brightness, brightness uniformity and chromaticity are under the dark room condition (1lux or less).

DOCUMENT CONTROL SECTION

EDIT	DATE	DESIG.	CHECK	APPR.	DESCRIPTION
04	20021205				Change value of brightness uniformity
03	20020924				Change spec. of the brightness
					Min.value of contrast ratio
02	20020807				Add γ-curve value and change

DESIG. | CHECK | APPR.

FLC43XWC8V-02

Tech Bes LCD-00149 CUST.

FUJITSU DISPLAY TECHNOLOGIES CORPORATION SHEET 8 /

Note 1) Definition of Viewing Angle (1)

Based on Fig.9-2.

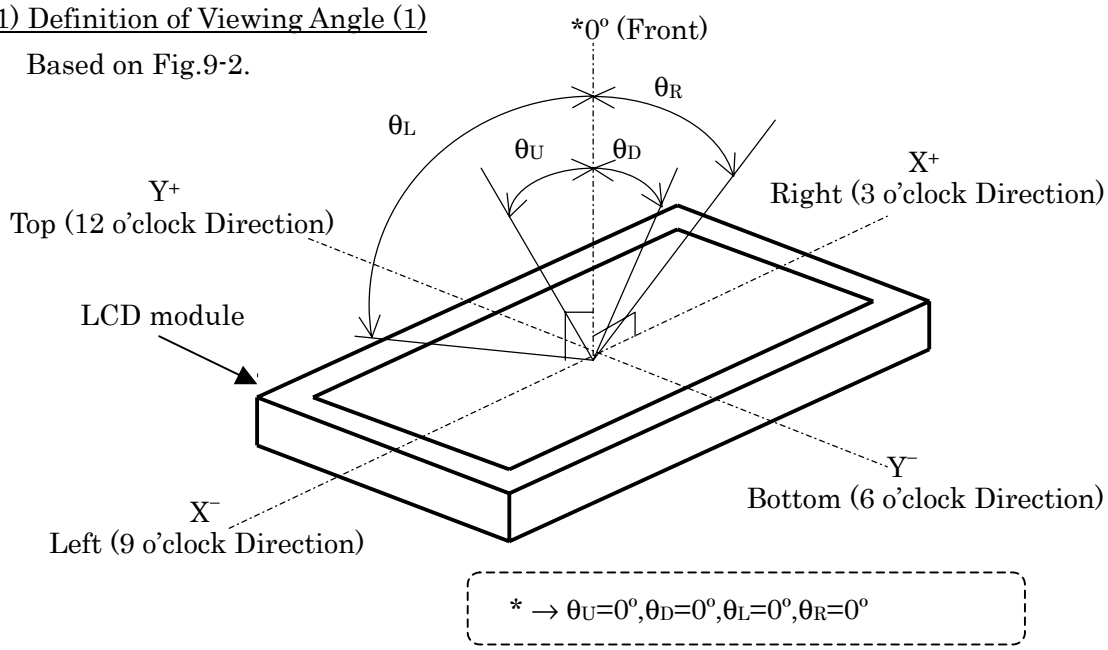

Fig.9-2. Definition of Viewing Angle (1)

Note 2) Definition of Viewing Angle (2)

Based on Fig.9-3.

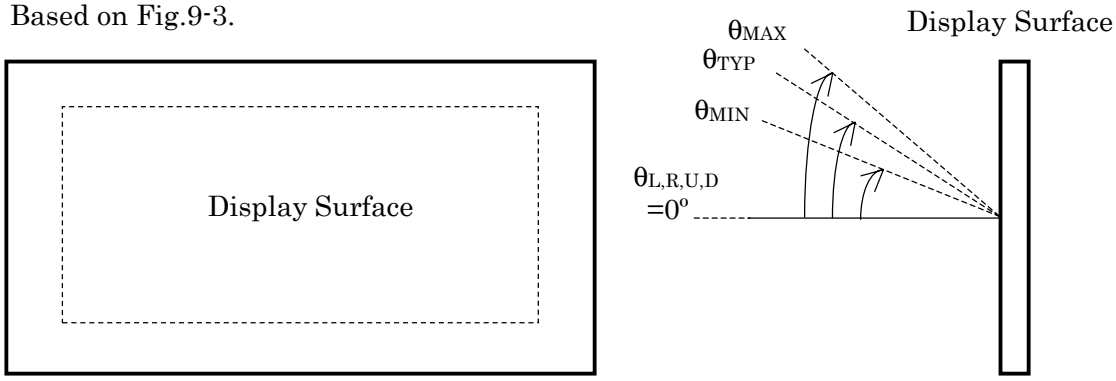

Fig.9-3. Definition of Viewing Angle (2)

Note 3) Definition of Contrast Ratio (CR)

Determined by Formula (1) based on Fig.9-4.Voltage-Brightness Characteristics.

$$= \frac{L_W \text{ (Brightness at white)}}{L_B \text{ (Brightness at black)}} \quad \text{-------- (1)}$$

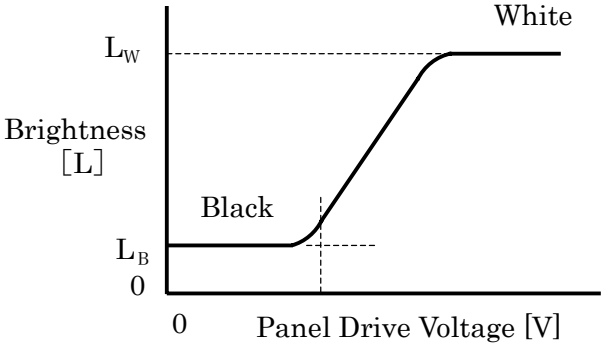

Fig.9-4. Voltage-Brightness Characteristics

DOCUMENT CONTROL SECTION

DATE

EDIT	DATE	DESIG.	CHECK	APPR.	DESCRIPTION
DESIG.			CHECK		APPR.

FLC43XWC8V-02

Tech Bes LCD-00149

CUST.

FUJITSU DISPLAY TECHNOLOGIES CORPORATION

Note 4) Definition of Response Time

Based on Fig.9-5.

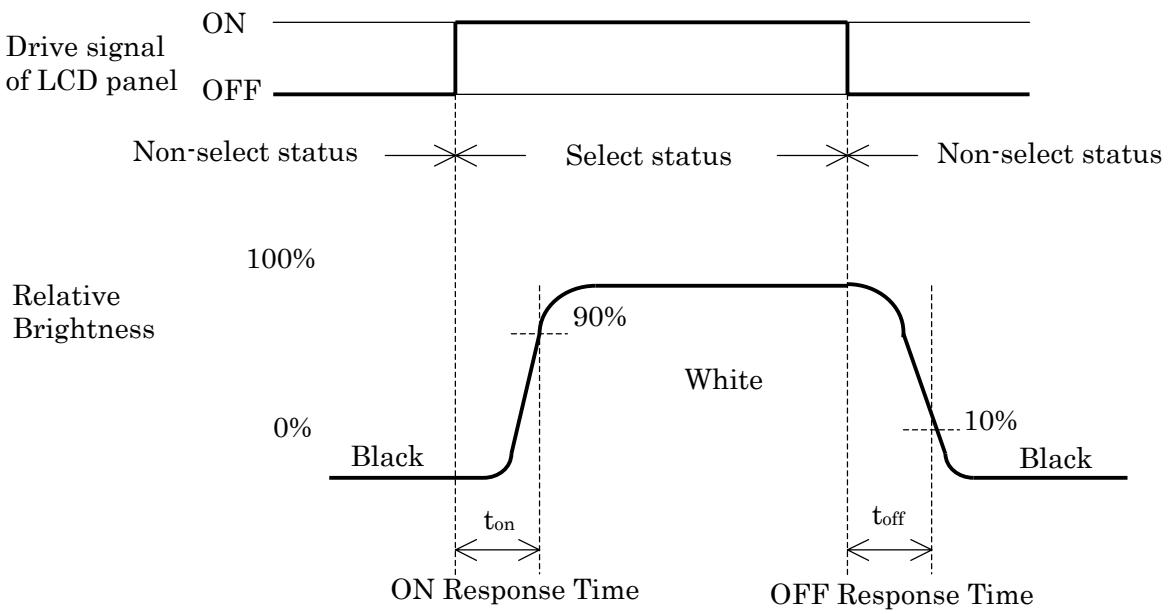

Fig.9-5. Definition of Response Time

Note 5) Contrast Ratio and Response Measurement System

Based on Fig.9-6.

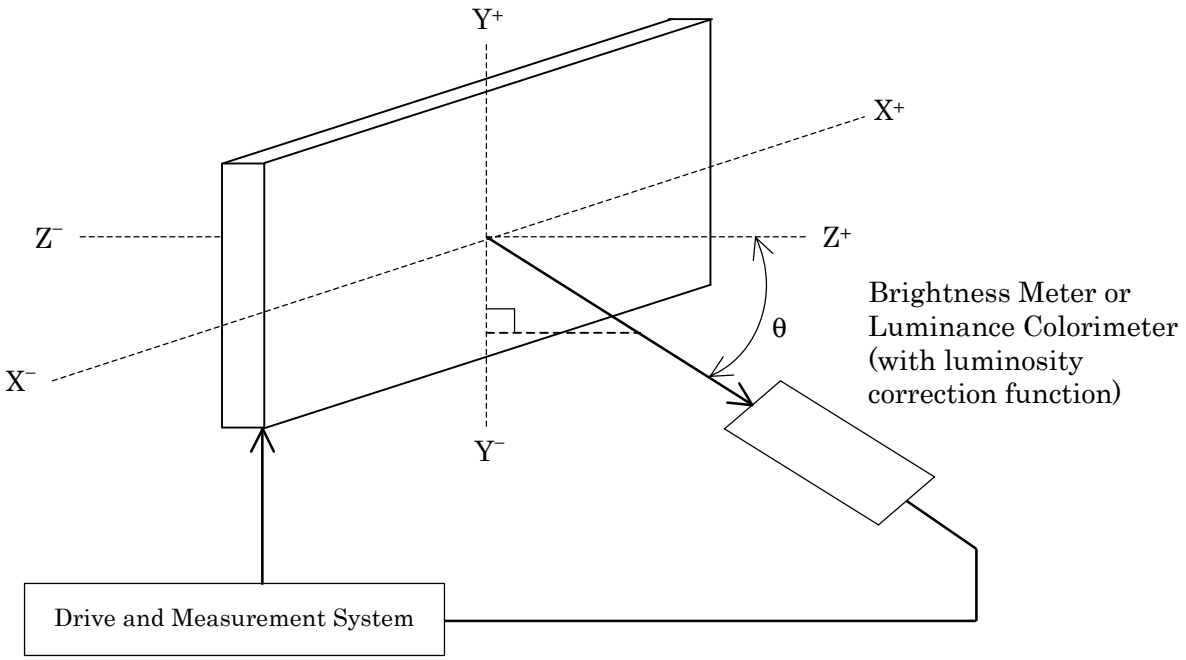

Fig.9-6. Contrast Ratio and Response Time Measurement System

Note 6) Definition of Optimum Viewing Angle

Based on Fig.9-7.

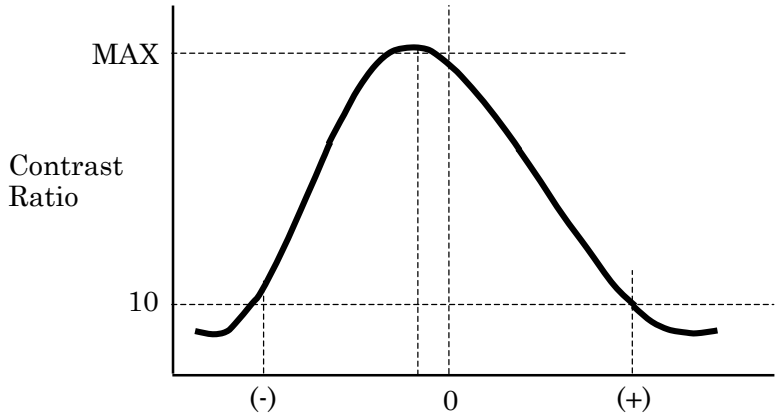

Fig.9-7. Definition of Viewing Angle

Note 7) Definition of Brightness Uniformity

Brightness uniformity is defined by the following formula.

Brightness (I1~I9) art measured at the following 9 points (① ~ ⑨) on the display area shown in Fig.9-8.

$$\text{Brightness Uniformity } (\Delta L) = \frac{|\text{Min. In}|}{|\text{Max. In}|} \times 100\ (\%),\ n=1 \text{ to } 9$$

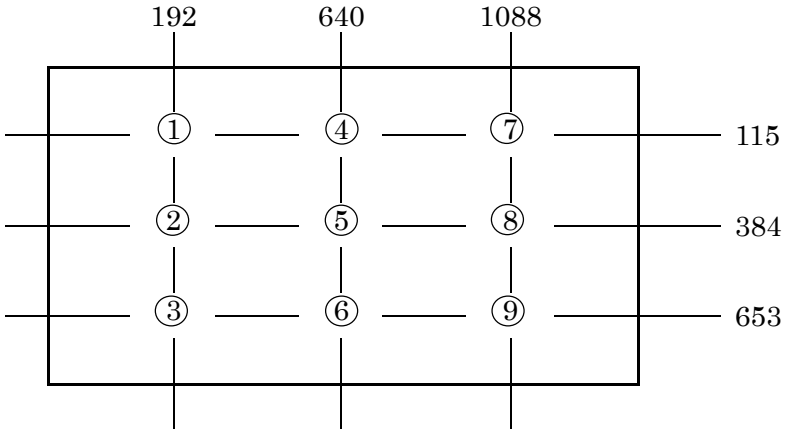

Note) Each measurement point (① ~ ⑨) defines the center spot of Brightness Meter view.
The tolerance of measurement position is ±3mm.

Fig.9-8. Measurement Points

10. INTERFACE SPECIFICATIONS

10-1-1. Signal descriptions

Table 10-1 shows the description and configuration of Interface signals (CN1).

Table 10-1-1. Interface signals (CN1)

Pin No.	Symbol	I/O	Function
1	VDD	—	+5V Power suply
2	VDD	—	+5V Power suply
3	GND	—	Ground
4	GND	—	Ground
5	RX0-	I	LVDS Receiver Signal(-)
6	RX0+	I	LVDS Receiver Signal(+)
7	GND	—	Ground
8	RX1-	I	LVDS Receiver Signal(-)
9	RX1+	I	LVDS Receiver Signal(+)
10	GND	—	Ground
11	RX2-	I	LVDS Receiver Signal(-)
12	RX2+	I	LVDS Receiver Signal(+)
13	GND	—	Ground
14	RXCLK-	I	LVDS Receiver Clock Signal(-)
15	RXCLK+	I	LVDS Receiver Clock Signal(+)
16	GND	—	Ground
17	RX3-	I	LVDS Receiver Signal(-)
18	RX3+	I	LVDS Receiver Signal(+)
19	GND	—	Ground
20	Data Mapping Select Input	I	Low : table 10-1-2 Open or Hi : table 10-1-3

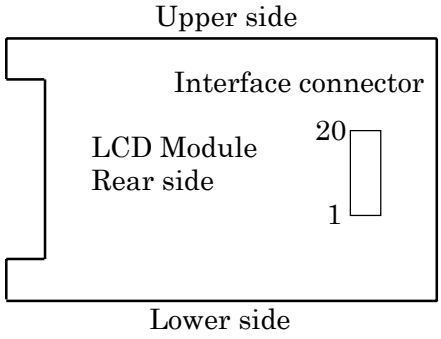

Connector : D14H-20P-1.25H(HIROSE)

User's connector : DF14-20S-1.25 (HIROSE)

DOCUMENT CONTROL SECTION

DATE

EDIT	DATE	DESIG.	CHECK	APPR.	DESCRIPTION
02	20020807				Total revision

DESIG. CHECK APPR.

FLC43XWC8V-02

Tech Bes LCD-00149

CUST.

FUJITSU DISPLAY TECHNOLOGIES CORPORATION

10-1-2. LVDS Data Mapping 1

Table 10-1-2 shows the LVDS data mapping 1.(DataMappingSelectInput = Low)

Table 10-1-2. LVDS Data Mapping 1

Transmitter (DS90CF385)		Symbol	Interface connector			Receiver (DS90CF386)		LCD Control input
Pin	INPUT		System side	Pin	LCD module	Pin	OUTPUT	
51	TxIN0	R0	TxOUT0− TxOUT0+	5 6	RX0− RX0+	27	RxOUT0	IR0
52	TxIN1	R1				29	RxOUT1	IR1
54	TxIN2	R2				30	RxOUT2	IR2
55	TxIN3	R3				32	RxOUT3	IR3
56	TxIN4	R4				33	RxOUT4	IR4
2	TxIN5	R7	TxOUT3− TxOUT3+	17 18	RX3− RX3+	34	RxOUT5	IR7
3	TxIN6	R5	TxOUT0− TxOUT0+	5 6	RX0− RX0+	35	RxOUT6	IR5
4	TxIN7	G0				37	RxOUT7	IG0
6	TxIN8	G1	TxOUT1− TxOUT1+	8 9	RX1− RX1+	38	RxOUT8	IG1
7	TxIN9	G2				39	RxOUT9	IG2
8	TxIN10	G6	TxOUT3− TxOUT3+	17 18	RX3− RX3+	41	RxOUT10	IG6
10	TxIN11	G7				42	RxOUT11	IG7
11	TxIN12	G3	TxOUT1− TxOUT1+	8 9	RX1− RX1+	43	RxOUT12	IG3
12	TxIN13	G4				45	RxOUT13	IG4
14	TxIN14	G5				46	RxOUT14	IG5
15	TxIN15	B0				47	RxOUT15	IB0
16	TxIN16	B6	TxOUT3− TxOUT3+	17 18	RX3− RX3+	49	RxOUT16	IB6
18	TxIN17	B7				50	RxOUT17	IB7
19	TxIN18	B1	TxOUT1− TxOUT1+	8 9	RX1− RX1+	51	RxOUT18	IB1
20	TxIN19	B2	TxOUT2− TxOUT2+	11 12	RX2− RX2+	53	RxOUT19	IB2
22	TxIN20	B3				54	RxOUT20	IB3
23	TxIN21	B4				55	RxOUT21	IB4
24	TxIN22	B5				1	RxOUT22	IB5
25	TxIN23	RESERVED	TxOUT3− TxOUT3+	17 18	RX3− RX3+	2	RxOUT23	Not use
27	TxIN24	RESERVED	TxOUT2− TxOUT2+	11 12	RX2− RX2+	3	RxOUT24	Not use
28	TxIN25	RESERVED				5	RxOUT25	Not use
30	TxIN26	ENAB				6	RxOUT26	ENAB
50	TxIN27	R6	TxOUT3− TxOUT3+	17 18	RX3− RX3+	7	RxOUT27	IR6
31	TxCLKIN	DCLK	TxCLKOUT− TxCLKOUT+	14 15	RXCLK− RXCLK+	26	RxCLKOUT	DCLK

DOCUMENT CONTROL SECTION

DATE

EDIT	DATE	DESIG.	CHECK	APPR.	DESCRIPTION
02	20020807				Total revision

DESIG. CHECK APPR.

FLC43XWC8V-02

Tech Bes LCD-00149

CUST.

FUJITSU DISPLAY TECHNOLOGIES CORPORATION

SHEET 13/

10-1-3. LVDS Data Mapping 2

Table 10-1-3 shows the LVDS data mapping 2.(DataMappingSelectInput = Open or Hi)

Table 10-1-3. LVDS Data Mapping 2

Transmitter (DS90CF385)		Symbol	Interface connector			Receiver (DS90CF386)		LCD Control input
Pin	INPUT		System side	Pin	LCD module	Pin	OUTPUT	
51	TxIN0	R2	TxOUT0- TxOUT0+	5 6	RX0- RX0+	27	RxOUT0	IR2
52	TxIN1	R3				29	RxOUT1	IR3
54	TxIN2	R4				30	RxOUT2	IR4
55	TxIN3	R5				32	RxOUT3	IR5
56	TxIN4	R6				33	RxOUT4	IR6
2	TxIN5	R1	TxOUT3- TxOUT3+	17 18	RX3- RX3+	34	RxOUT5	IR1
3	TxIN6	R7	TxOUT0- TxOUT0+	5 6	RX0- RX0+	35	RxOUT6	IR7
4	TxIN7	G2				37	RxOUT7	IG2
6	TxIN8	G3	TxOUT1- TxOUT1+	8 9	RX1- RX1+	38	RxOUT8	IG3
7	TxIN9	G4				39	RxOUT9	IG4
8	TxIN10	G0	TxOUT3- TxOUT3+	17 18	RX3- RX3+	41	RxOUT10	IG0
10	TxIN11	G1				42	RxOUT11	IG1
11	TxIN12	G5	TxOUT1- TxOUT1+	8 9	RX1- RX1+	43	RxOUT12	IG5
12	TxIN13	G6				45	RxOUT13	IG6
14	TxIN14	G7				46	RxOUT14	IG7
15	TxIN15	B2				47	RxOUT15	IB2
16	TxIN16	B0	TxOUT3- TxOUT3+	17 18	RX3- RX3+	49	RxOUT16	IB0
18	TxIN17	B1				50	RxOUT17	IB1
19	TxIN18	B3	TxOUT1- TxOUT1+	8 9	RX1- RX1+	51	RxOUT18	IB3
20	TxIN19	B4	TxOUT2- TxOUT2+	11 12	RX2- RX2+	53	RxOUT19	IB4
22	TxIN20	B5				54	RxOUT20	IB5
23	TxIN21	B6				55	RxOUT21	IB6
24	TxIN22	B7				1	RxOUT22	IB7
25	TxIN23	RESERVED	TxOUT3- TxOUT3+	17 18	RX3- RX3+	2	RxOUT23	Not use
27	TxIN24	RESERVED	TxOUT2- TxOUT2+	11 12	RX2- RX2+	3	RxOUT24	Not use
28	TxIN25	RESERVED				5	RxOUT25	Not use
30	TxIN26	ENAB				6	RxOUT26	ENAB
50	TxIN27	R0	TxOUT3- TxOUT3+	17 18	RX3- RX3+	7	RxOUT27	IR0
31	TxCLKIN	DCLK	TxCLKOUT- TxCLKOUT+	14 15	RXCLK- RXCLK+	26	RxCLKOUT	DCLK

10-2. Color Data Assignment

Table 10-2 shows the color data assignment.

Table 10-2. Color Data Assignment

Color and Brightness			Input data (0 : Low level, 1 : High level)																							
			R7	R6	R5	R4	R3	R2	R1	R0	G7	G6	G5	G4	G3	G2	G1	G0	B7	B6	B5	B4	B3	B2	B1	B0
Basic Color	Black		0	0	0	0	0	0	0	0	0	0	0	0	0	0	0	0	0	0	0	0	0	0	0	0
	Blue		0	0	0	0	0	0	0	0	0	0	0	0	0	0	0	0	1	1	1	1	1	1	1	1
	Green		0	0	0	0	0	0	0	0	1	1	1	1	1	1	1	1	0	0	0	0	0	0	0	0
	Cyan		0	0	0	0	0	0	0	0	1	1	1	1	1	1	1	1	1	1	1	1	1	1	1	1
	Red		1	1	1	1	1	1	1	1	0	0	0	0	0	0	0	0	0	0	0	0	0	0	0	0
	Magenta		1	1	1	1	1	1	1	1	0	0	0	0	0	0	0	0	1	1	1	1	1	1	1	1
	Yellow		1	1	1	1	1	1	1	1	1	1	1	1	1	1	1	1	0	0	0	0	0	0	0	0
	White		1	1	1	1	1	1	1	1	1	1	1	1	1	1	1	1	1	1	1	1	1	1	1	1
Red	Black	0	0	0	0	0	0	0	0	0	0	0	0	0	0	0	0	0	0	0	0	0	0	0	0	0
	⇧	1	0	0	0	0	0	0	0	1	0	0	0	0	0	0	0	0	0	0	0	0	0	0	0	0
	Darker	2	0	0	0	0	0	0	1	0	0	0	0	0	0	0	0	0	0	0	0	0	0	0	0	0
	⇧	:	:	:	:	:	:	:	:	:	:	:	:	:	:	:	:	:	:	:	:	:	:	:	:	:
		:	:	:	:	:	:	:	:	:	:	:	:	:	:	:	:	:	:	:	:	:	:	:	:	:
	⇩	:	:	:	:	:	:	:	:	:	:	:	:	:	:	:	:	:	:	:	:	:	:	:	:	:
	Brighter	253	:	:	:	:	:	:	:	:	:	:	:	:	:	:	:	:	:	:	:	:	:	:	:	:
	⇩	254	1	1	1	1	1	1	0	1	0	0	0	0	0	0	0	0	0	0	0	0	0	0	0	0
	Red	255	1	1	1	1	1	1	1	0	0	0	0	0	0	0	0	0	0	0	0	0	0	0	0	0
			1	1	1	1	1	1	1	1	0	0	0	0	0	0	0	0	0	0	0	0	0	0	0	0
Green	Black	0	0	0	0	0	0	0	0	0	0	0	0	0	0	0	0	0	0	0	0	0	0	0	0	0
	⇧	1	0	0	0	0	0	0	0	0	0	0	0	0	0	0	0	1	0	0	0	0	0	0	0	0
	Darker	2	0	0	0	0	0	0	0	0	0	0	0	0	0	0	1	0	0	0	0	0	0	0	0	0
	⇧	:	:	:	:	:	:	:	:	:	:	:	:	:	:	:	:	:	:	:	:	:	:	:	:	:
		:	:	:	:	:	:	:	:	:	:	:	:	:	:	:	:	:	:	:	:	:	:	:	:	:
	⇩	:	:	:	:	:	:	:	:	:	:	:	:	:	:	:	:	:	:	:	:	:	:	:	:	:
	Brighter	253	0	0	0	0	0	0	0	0	1	1	1	1	1	1	0	1	0	0	0	0	0	0	0	0
	⇩	254	0	0	0	0	0	0	0	0	1	1	1	1	1	1	1	0	0	0	0	0	0	0	0	0
	Green	255	0	0	0	0	0	0	0	0	1	1	1	1	1	1	1	1	0	0	0	0	0	0	0	0
Blue	Black	0	0	0	0	0	0	0	0	0	0	0	0	0	0	0	0	0	0	0	0	0	0	0	0	0
	⇧	1	0	0	0	0	0	0	0	0	0	0	0	0	0	0	0	0	0	0	0	0	0	0	0	1
	Darker	2	0	0	0	0	0	0	0	0	0	0	0	0	0	0	0	0	0	0	0	0	0	0	1	0
	⇧	:	:	:	:	:	:	:	:	:	:	:	:	:	:	:	:	:	:	:	:	:	:	:	:	:
		:	:	:	:	:	:	:	:	:	:	:	:	:	:	:	:	:	:	:	:	:	:	:	:	:
	⇩	:	:	:	:	:	:	:	:	:	:	:	:	:	:	:	:	:	:	:	:	:	:	:	:	:
	Brighter	253	0	0	0	0	0	0	0	0	0	0	0	0	0	0	0	0	1	1	1	1	1	1	0	1
	⇩	254	0	0	0	0	0	0	0	0	0	0	0	0	0	0	0	0	1	1	1	1	1	1	1	0
	Blue	255	0	0	0	0	0	0	0	0	0	0	0	0	0	0	0	0	1	1	1	1	1	1	1	1

Note.1) Definition of gray scale : Color (n) ---"n" indicates gray scale level.
The gray scale is brighter as the number is larger.

Note.2) Data; 1: High, 0: Low

Note.3) By inputting 8-bit data signal for each red, green and blue, this module can display 256 gray scale independently for each color.
Therefore, the module is able to display 16 million colors. Color data are 24 lines.

DOCUMENT CONTROL SECTION

DATE

EDIT	DATE	DESIG.	CHECK	APPR.	DESCRIPTION
DESIG.			CHECK		APPR.

FLC43XWC8V-02

Tech Bes LCD-00149

CUST.

FUJITSU DISPLAY TECHNOLOGIES CORPORATION

10-3. Input Signal Timing

Table 10-3 and Fig.10-3 shows the input signal timing.

Table 10-3. Timing Characteristics (T=0~50°C, Vcc=5±0.25V)

Item			Symbol	Min.	Typ.	Max.	Unit	Remark
DCLK signal (Clock) ②		Period	Tc	12.500④	15.382	20.000	ns	
		Frequency	fc	50.00	65.01	80.00④	MHz	fc=1/Tc
		Duty	Tch/Tc	45	50	55	%	*1
		High time	TclkH	5.0	—	—	ns	
		Low time	TclkL	5.0	—	—	ns	
		Rise time	Tclkr	—	—	5.0	ns	
		Fall time	Tclkf	—	—	5.0	ns	
DCLK-Data Timing		Setup time	Tset	~~(4.5)~~4④	—	—	ns	
		Hold time	Thold	~~(6.5)~~ 4④	—	—	ns	
Data-ENAB timing	Horizontal	Period	Th	1340	1344	~~(3012)~~ 1688④	DCLK	
		Frequency	fh	46.6	48.3	55.5④	kHz	
		Display period	Thd	1280	1280	1280	DCLK	*2,3
	Vertical	Period	Tv	776	806	806④	Th	16.67ms
		Frequency	1/Tv	(50)④	60	(75)④	Hz	WXGA mode ④
		Display period	Tvd	768	768	768	Th	*2,3
	Data-ENAB timing		Tdn	0	0	0	DCLK	*4

*1) DCLK signal input must be valid while power supply is applied.

*2) Display position is specified by the ENAB signal only.

- Horizontal display position is specified by the rise of ENAB signal. The data which is latched by the falling edge of 1st DCLK right after the rise of ENAB, is displayed on the left edge of the screen.
- Vertical display position is specified by the rise of ENAB after a "Low" level period equivalent to eight times of horizontal period. The 1st data corresponding to one horizontal line after the rise of ENAB is displayed at the top line of screen.

*3) If a period of ENAB "High" is less than 1280 DCLK or less than 768 lines, the rest of the screen displays black.

*4) The display position does not fit to the screen if a period of ENAB "High" and the effective data period do not synchronize with each other.

DOCUMENT CONTROL SECTION

DATE

EDIT	DATE	DESIG.	CHECK	APPR.	DESCRIPTION
04	20021205				Change ④parts in Table10-3
02	20020807				Correct values of DCLK frequency

DESIG. CHECK APPR.

FLC43XWC8V-02

Tech Bes LCD-00149

CUST.

FUJITSU DISPLAY TECHNOLOGIES CORPORATION

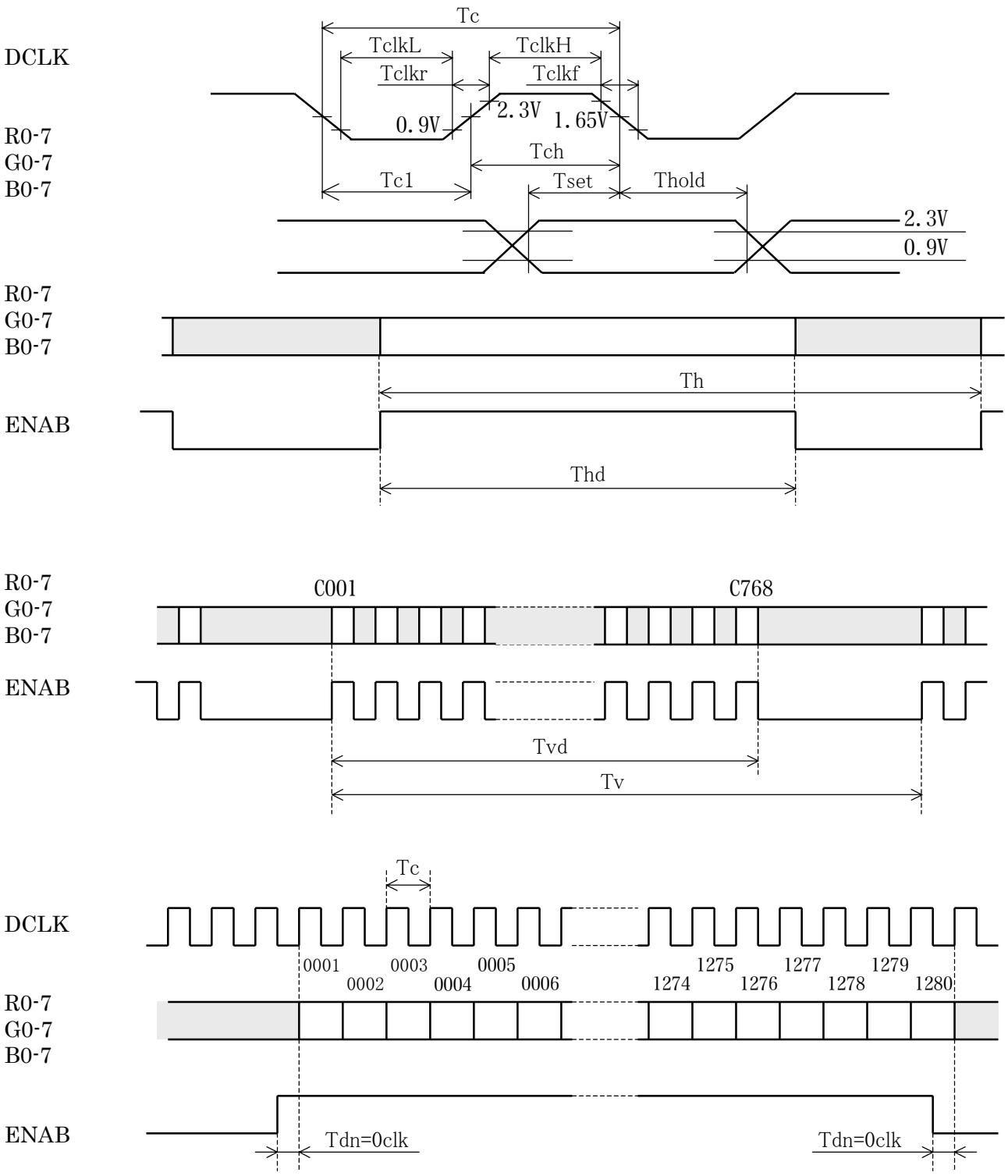

Fig.10-3.Input Signal Timing Chart

DOCUMENT CONTROL SECTION

DATE

EDIT	DATE	DESIG.	CHECK	APPR.	DESCRIPTION
DESIG.			CHECK		APPR.

FLC43XWC8V-02

Tech Bes LCD-00149

CUST.

FUJITSU DISPLAY TECHNOLOGIES CORPORATION

SHEET 17/

10-4. Correspondence between Data and Display Position

Fig.10-4 shows the Correspondence between Data and Display Position.

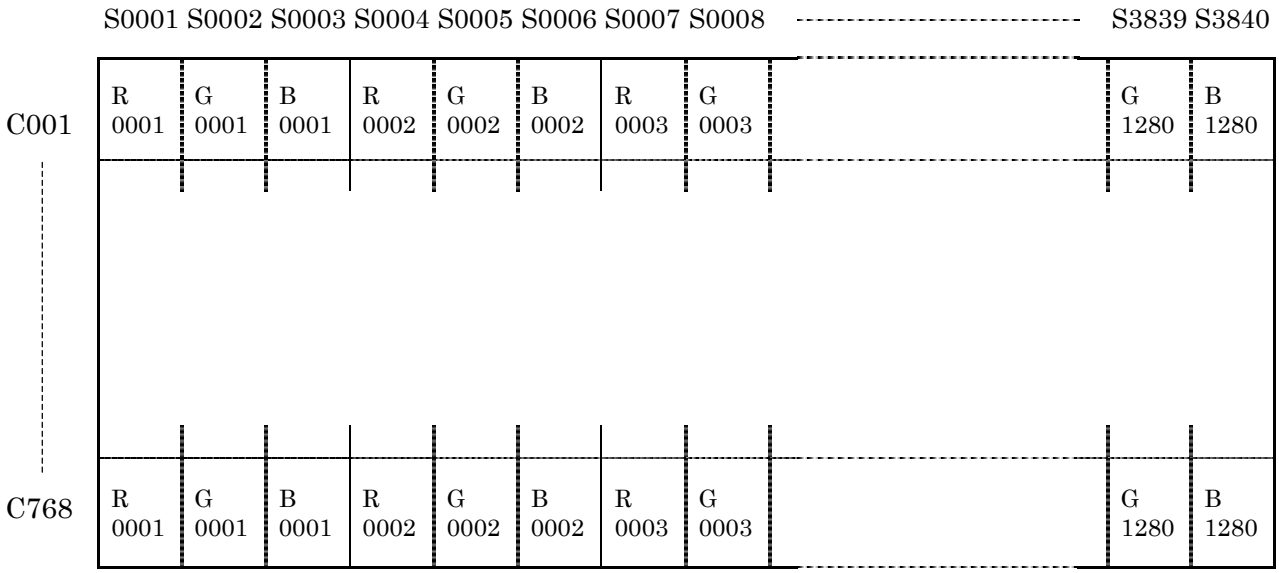

Fig.10-4.Correspondence Data and Display Position

10-5. Power Supply Sequence

The sequence of input signals and On/Off of the power supply of this LCD module should be in the specification shown in Fig.10-5 to prevent latch-up of the driver ICs and DC driving of the LCD panel.

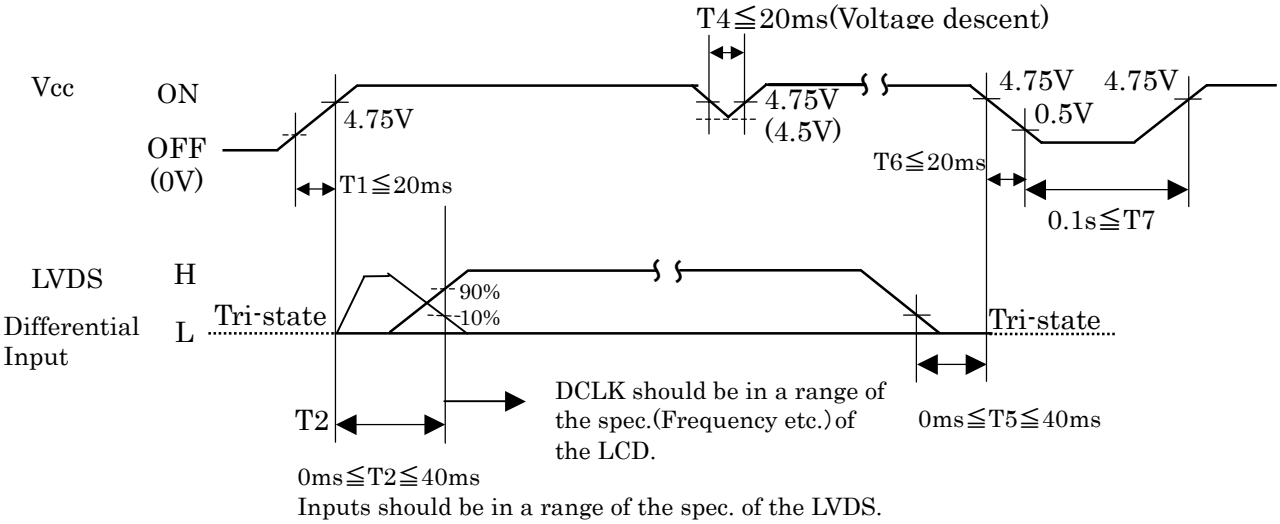

Fig.10-5. Power Supply Sequence

DOCUMENT CONTROL SECTION

DATE

EDIT	DATE	DESIG.	CHECK	APPR.	DESCRIPTION
DESIG.			CHECK		APPR.

FLC43XWC8V-02

Tech Bes LCD-00149

CUST.

FUJITSU DISPLAY TECHNOLOGIES CORPORATION

11. BACKLIGHT SPECIFICATIONS

11-1. Pin Configuration for Backlight

Table 11-1(a) and 11-1(b) shows the description and pin assignment of the connectors (CN-A and B) for the Backlight of this LCD module.

Table 11-1(a) Pin Assignment of CN-A

Pin No.	Signal	Function	Cable color
1	V_L1	Power supply for CCFL 1	Red
2	V_L2	Power supply for CCFL 2	Red
3	NC	——	—
4	GND	Ground (for V_L1, 2)	White

Table11-1(b) Pin Assignment of CN-B

Pin No.	Signal	Function	Cable color
1	V_L3	Power supply for CCFL 3	Red
2	V_L4	Power supply for CCFL 4	Red
3	NC	——	—
4	GND	Ground (for V_L3, 4)	White

Connector : Housing : BHR-04VS-1
: Contact : SBH-001T-P0.5
User's Connector : Post with base : SM04(4.0)B-BHS-1-TB
Supplier : Japan Solderless Terminal Trading Company LTD. (J.S.T.)

11-2. CCFL

Supplier : SANKEN ELECTRIC CO., LTD Part No. SD26E3850E8350B3113000

11-3. Life

The life of the backlight is a minimum of 25,000 hours at the following conditions.

(1) Working conditions
① Ambient temperature : 25±5ºC
② Tube current(I_L) : (10.5mA or less)

(2) Definition of life
① Brightness becomes 50% or below 50% of the minimum brightness value shown in Table 9-1.
② The lamp cannot be lit by the breakdown voltage of 1600Vvms.
③ Lamp is flashing.

11-4. Lamp Assembly set (for replacement)

Lamp Assembly set (with charge) is prepared for maintenance.
This set consists of an upper lamp assembly and a lower lamp assembly.

Type number : FLCL-21

12. APPEARANCE SPECIFICATIONS

12-1. Zone

- Inside display dot area (369.6× 221.8mm)
- Display dot area means active area.
- One pixel consists of 3 dots (red, green and blue).
- Foreign particle and scratch unharmful to display image, such as the foreign particle under polarizer film but outside of the display area and scratch on metal bezel, backlight module or polarizer film out of the display area, etc., are not counted.

12-2. Bright spots

(1) Bright spots by the defect of TFT.

- Visible under bias of 2% ND filter ..... High bright spot R・G
- Visible under 5% but invisible under 2% ND filter ..... Low bright spot R・G・B
- Invisible under bias of 5% ND filter ..... Not counted

(2) Bright spots by the light passing through tears, breaks, etc in color filter.

- Exceed size of a half dot ..... High bright spot
- A half dot or less ..... Not counted

(3) Bright spots by the light passing through tears, breaks, etc in chromium mask.

- Exceed 50μm ..... High bright spot
- 50μm or less ..... Not counted

12-3. Test condition

- Inspector must observe the LCD screen from the normal direction under the illumination by a single 20W fluorescent lamp. The distance between the LCD screen and the inspector should be a height of 50cm above the worktable.
  The vertical illuminance is 300 to 600lux (reference value).
- Bright spot should be counted under entire black screen.
- Dark spot should be counted under entire white screen.
- Frame frequency should be 60Hz.

12-4. Specifications

Table 12-4 shows the appearance standard.

(Note1) Please do not mistake a single bright spot for a bright spot connection due to Cs(supplemental capacitance) line at the center of each dot.

(Note2) If a pixel is dark partially, it connects into the number of dark spots in accordance with following rule.

(a) S<1/3 : Not count. Only one of 4 dark connection is allowed.

(b) 1/3≦S<2/3 : Considered as 0.5 dot.

(C) 2/3≦S : Considered as 1 dot.

(S=Dark spot size/dot size)

③(Note3) Min. distance between foreign particles : 100mm

DOCUMENT CONTROL SECTION

DATE

EDIT	DATE	DESIG.	CHECK	APPR.	DESCRIPTION
03	20020924				Add (Note3)

DESIG. CHECK APPR.

FLC43XWC8V-02

Tech Bes LCD-00149 CUST.

FUJITSU DISPLAY TECHNOLOGIES CORPORATION SHEET 20/

No.	Item		Judgment method and standard		
1	Bright spot (high and Low)		≦3 dots		(Note 1)
2	Bright spot connection (high and low)		≦1 pair (2 dot connection in horizontal)		(Note 1)
3	Total of bright spot		≦3 dots		
4	Dark spot		≦5 dots		(Note 2)
5	Dark spot connection		≦2 pairs (2 dot connection in horizontal)		(Note 2)
6	Total of dark spot		≦ 5dots		(Note 2)
7	Total of dot defect(bright and dark)		≦ 8 dots		
8	Distance of bright spot	high-high high	≧15mm		
		others	≧ 5mm		
9	Distance of dark spot		≧ 5mm		
10	Scratch on polarizer		W≦0.03	————	Not count
			0.03<W≦0.05	L≦6	Not count
				6<L≦12	≦5
				12<L	0
			0.05<W≦0.10	L≦0.6	Not count
				0.6<L≦5	≦3
				5<L	0
			0.15<W≦0.3	W×L≦0.4	≦1
				0.4<W×L	0
			0.10<W	————	0
11	Dent on polarizer		D≦0.3		Not count
			0.3<D≦0.4		≦6
			0.4<D		0
12	Bubble in polarizer		D≦0.3		Not count
			D≦0.5		Not count
			0.5<D		0
13	Spot (black/white) by foreign particle		D<0.5		≦5
			0.5≦D		0
14	Bright spot by fiber foreign particle (under the polarizer. i.e. between the polarizer and the glass) (Note 3)		D≦0.2		Not count
			0.2<D≦0.3		≦2
			0.3<D≦0.35		1
			0.35<D		0
15	Line (black /white), scratch by fiber foreign particle		W≦0.03	————	Not count
			0.03<W≦0.05	L≦6	Not count
				6<L≦12	≦5
				12<L	0
			0.05<W≦0.1	L≦0.6	Not count
				0.6<L≦5	≦3
				5<L	0
			0.1<W	(W+L)/2=D	Count as spot (black/white) of No.13

D:Average diameter [mm], W:Width [mm], L:Length [mm], S=(bright spot size)/(dot size)

DOCUMENT CONTROL SECTION

DATE

EDIT	DATE	DESIG.	CHECK	APPR.	DESCRIPTION
04	20021205				Total revision
03	20020924				Total revision

DESIG. CHECK APPR.

FLC43XWC8V-02

Tech Bes LCD-00149

CUST.

FUJITSU DISPLAY TECHNOLOGIES CORPORATION

SHEET 21/

Applied area	Item	Condition	Specification
Display dot area	Display location	Non-lighting	As for the display position in the display dot area, the variation of tolerance between window frame of the upper bezel and dot display area (right, left, up and down) is shown in the following table.

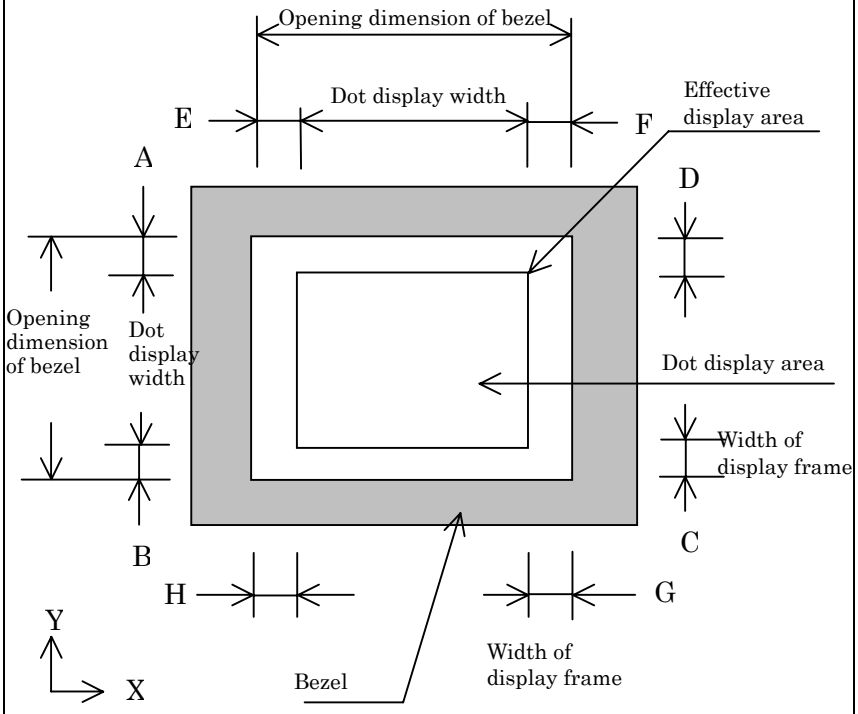

Tolerance (X direction)	Tolerance (Y direction)
|E-F| ≦1.0mm	|A-B| ≦1.0mm
|E-H| ≦0.7mm	|A-D| ≦0.7mm
|F-G| ≦0.7mm	|B-C| ≦0.7mm
|G-H| ≦1.0mm	|C-D| ≦1.0mm

*The dimension of effective display area, dot display area and display frame should follow the dimensions described in each specification.

DOCUMENT CONTROL SECTION

DATE

EDIT	DATE	DESIG.	CHECK	APPR.	DESCRIPTION
04	20021205				Add this page

DESIG. CHECK APPR.

FLC43XWC8V-02

Tech Bes LCD-00149

CUST.

FUJITSU DISPLAY TECHNOLOGIES CORPORATION

SHEET 22/

13. ENVIRONMENTAL SPECIFICATIONS

Table 13-1 shows the environmental specifications.

Table 13-1. Environmental Specifications

Item	Condition		Remark
Temperature	Operation	0~57ºC (Note1)	Temperature on surface of LCD panel (display area.)
	Storage	-20~60ºC	
Humidity	Operation	20~85%RH	Maximum wet-bulb temperature should not exceed 29ºC. No condensation.
	Storage	5~85%RH	
Vibration	Non-operation	10~500Hz, 1 cycle/20minute, 2G, 1.5mm max, 2hour each X, Y and Z directions	For single module without package.(Note2)
Shock	Non-operation	30G, 6ms, 1time each ±X, ±Y and ±Z directions.	

Note1: Temperature on surface of LCD panel should be under 57℃.

Note2: Table 13-2 and Fig. 13-1 show the shock resistance standard when module is packaged.

Table 13-2. Shock Resistance Standard when Module is Packaged

Dropping location	Dropping height	Count
A ~ J	60cm	1 time

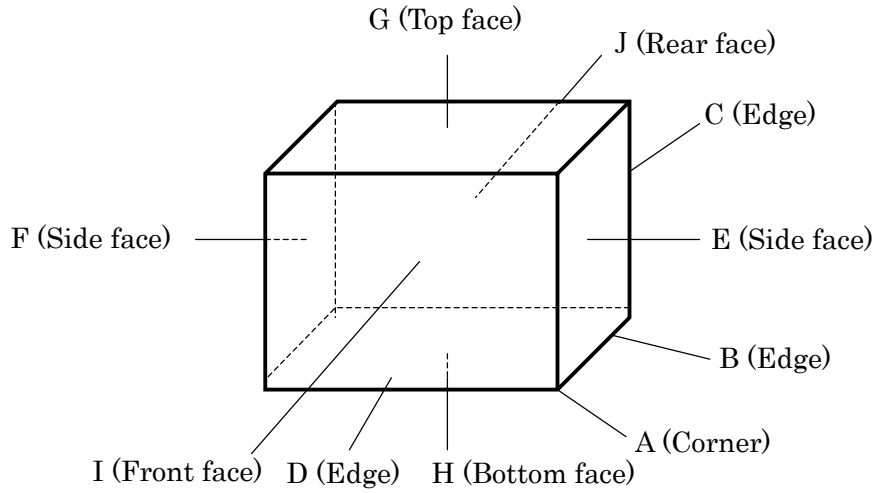

Fig.13-1. Direction to apply shock to package

14. INDICATIONS

This module has the following indications.

(1) Product name : LCD unit

(2) Model number : FLC43XWC8V-02

(3) Product drawing number: NA19026-C071

(4) Manufacturing number : 2 Y 0 0 0 0 1

- Serial number (To be reset every month on 1st.)
- Manufacturing month (Oct. = X, Nov. =Y, Dec. =Z)
- Last digit of manufacturing year.

(5) Version number : 01A (Example)
-1st 2 digits "01" means operational version.
-3rd alphabet means functional version.

(6) Country of origin : MADE IN JAPAN

(7) Company name : FUJITSU DISPLAY TECHNOLOGIES CORP.

(8) Caution when changing cold-cathode tubes and disposal method of them. (See Fig. 14-1)

・WHEN CHANGING COLD CATHODE FLUORESCENT LAMPS, FOLLOW OPERATING SPECIFICATIONS. ESPECIALLY BE CAREFUL ABOUT THE LAMP'S SIDE-EDGE.
・蛍光管の交換は作業仕様書に従って行って下さい。特に蛍光管ホルダ側面のエッジに気をつけて下さい。

・THIS TFT COLOR LCD CONTAINS COLD CATHODE FLUORESCENT LAMPS. PLEASE FOLLOW LOCAL ORDINANCES OR REGULATIONS FOR ITS DISPOSAL.
・当該液晶ディスプレイユニットには蛍光管が組み込まれていますので、地方自治体の条例または規則に従って廃棄して下さい。

Fig.14-1

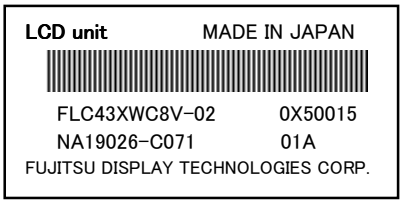

Fig.14-2 Product label (example)

15. PACKAGING

Separately specified in packaging specifications.

15-1. Packaging specifications

(1) 5 LCD modules / 1 package.

(2) Weight: approximately 13kg / 1 package.

(3) Outline dimensions : 348mm(W)×328(D)×490mm(H)

15-2. Packaging method

Fig.15-2 (a),(b),(c),(d) show the packing method.

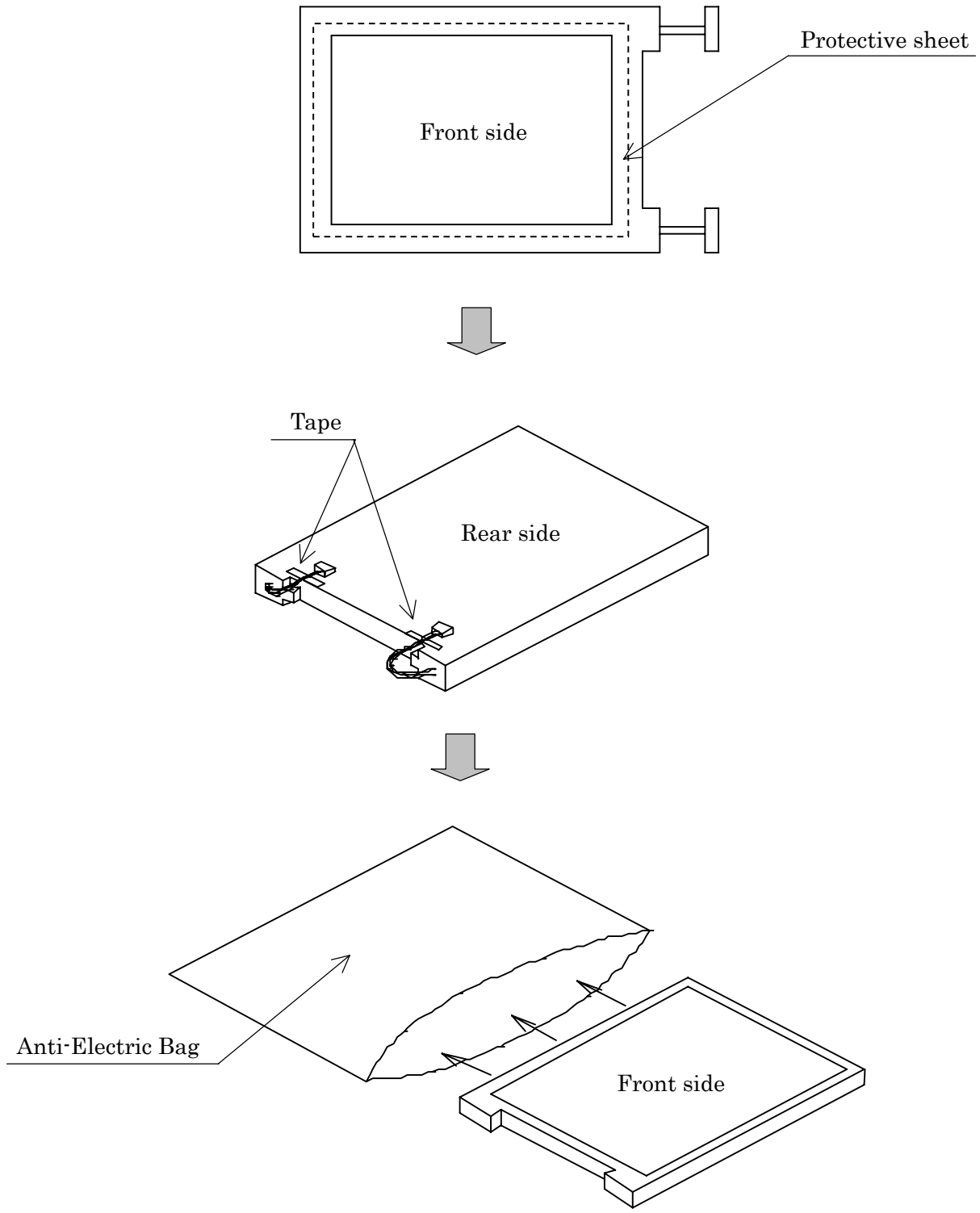

Fig.15-2(a) Packaging Method

DOCUMENT CONTROL SECTION

DATE

EDIT	DATE	DESIG.	CHECK	APPR.	DESCRIPTION
DESIG.			CHECK		APPR.

FLC43XWC8V-02

Tech Bes LCD-00149

CUST.

FUJITSU DISPLAY TECHNOLOGIES CORPORATION

SHEET 25/

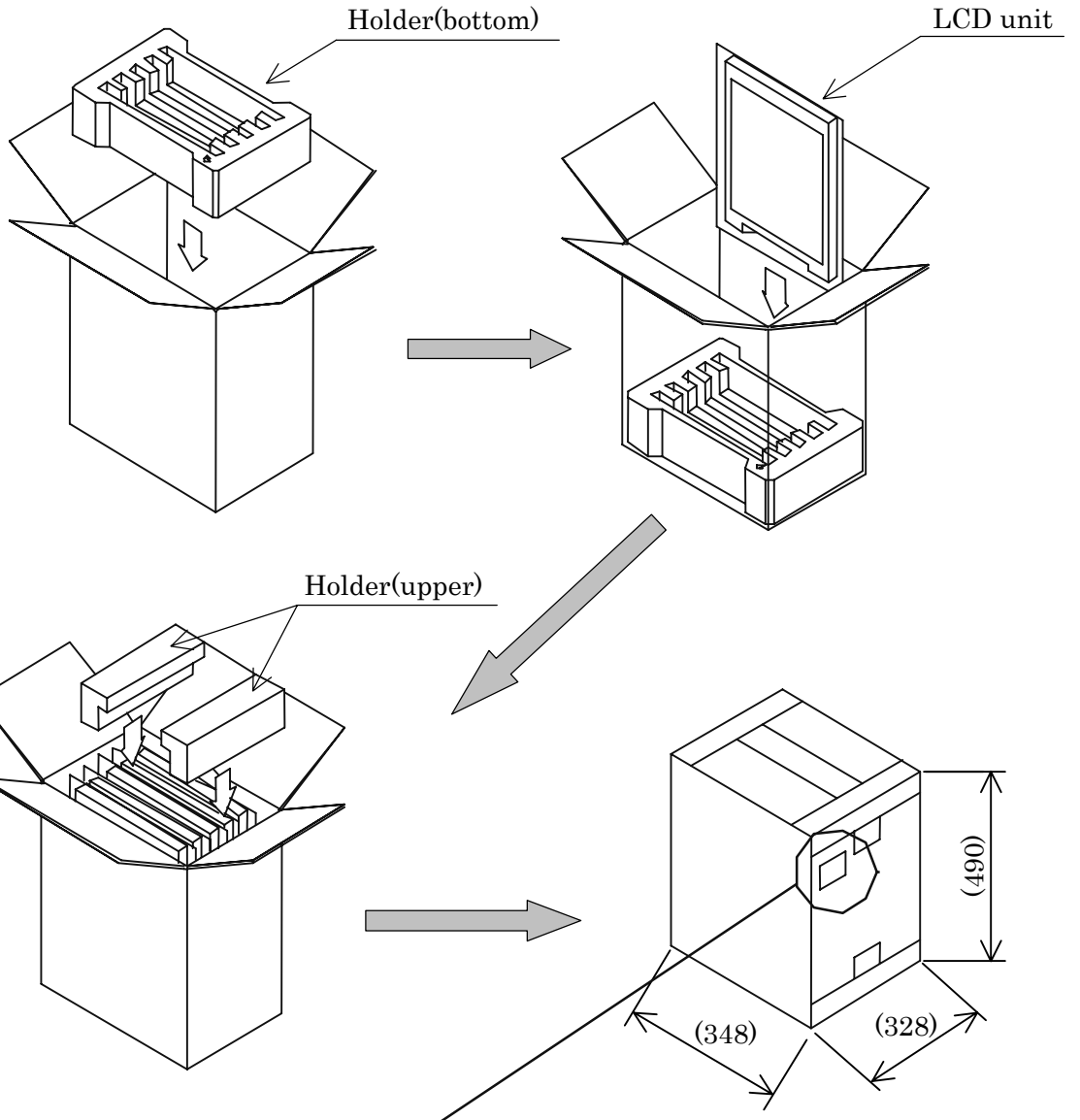

Label(example)

型 格 (TYPE)	FLC43XWC8V-02	数 量 (QTY.)	5
図 番 (DRWG. NO.)	NA19026-C071	版 数 (REV. NO.)	01A

9X00001
9X00002
9X00003
9X00004
9X00005

バーコード

MADE IN JAPAN

- Taping
  Upper : H or I method
  Bottom : H method
- Upper and bottom holders should be anti-electrostatic type.

Fig.15-2(b) Packaging Method

DOCUMENT CONTROL SECTION

DATE

EDIT	DATE	DESIG.	CHECK	APPR.	DESCRIPTION
DESIG.			CHECK		APPR.

FLC43XWC8V-02

Tech Bes LCD-00149

CUST.

FUJITSU DISPLAY TECHNOLOGIES CORPORATION

SHEET 26/

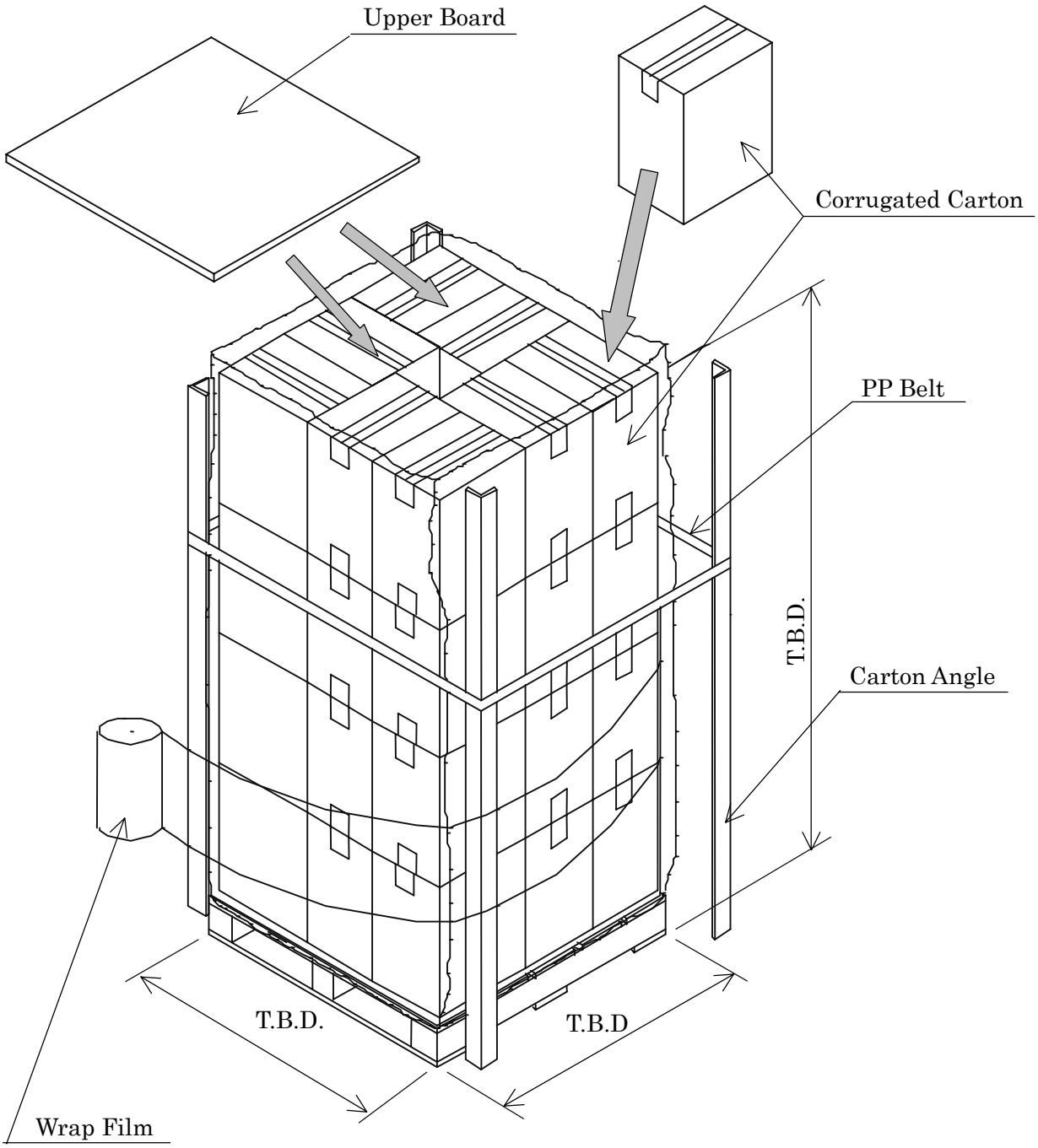

Fig.15-2(c) Packaging Method

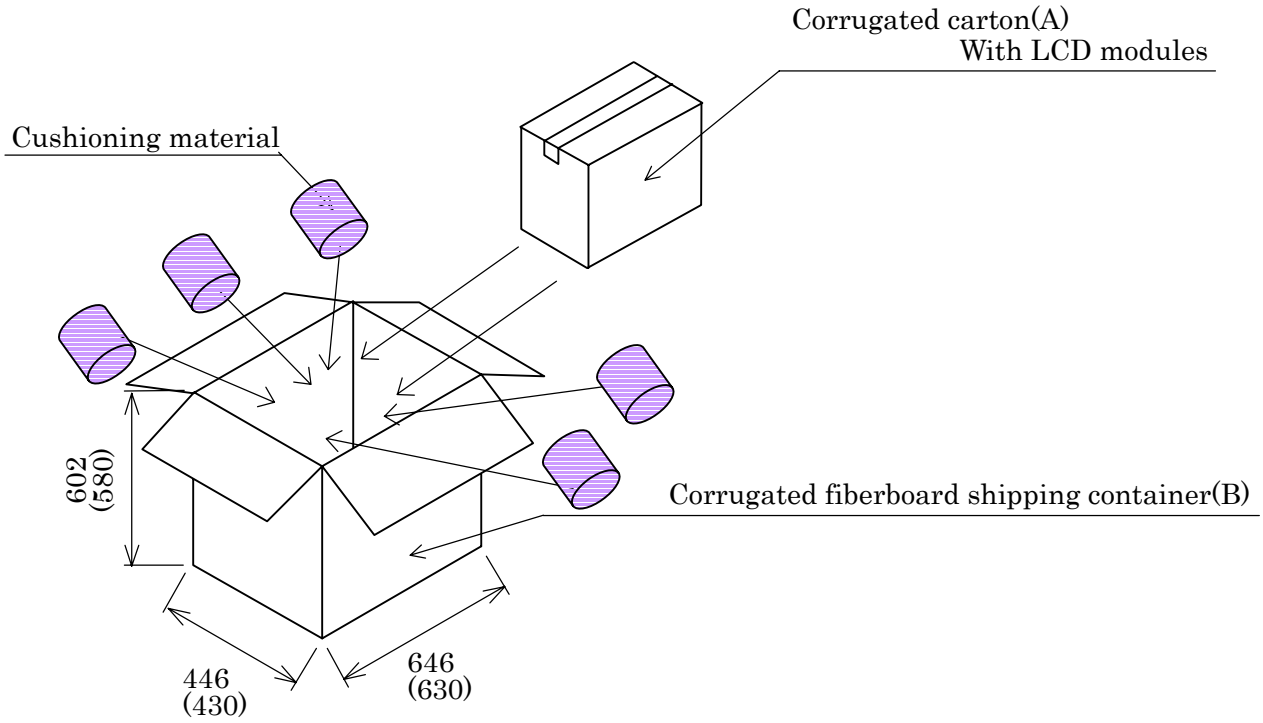

Note 1) The carton (A) should be placed in the middle of the container(B) with enough cushioning materials.

Figure.15-2(d) Packaging Method

16.WARRANTY

The warranty period is one year after manufacturing. Products which fail during this period are repaired or replaced without charge, unless the failure is caused by user.

17.PRECAUTIONS

Adhere to the following precautions to properly use this LCD module.

(1) Fail safe design

LCD module has an inherent chance of failure. Customers must protect against injury, damage or loss from such failures by incorporating safety design measures into your facility and equipment such as redundancy, fire protection, and prevention of over-current levels and other abnormal operating conditions.

(2) Handling of LCD panel

①Do not apply any strong mechanical shock to the LCD panel.

Since the LCD panel is made of glass, excessive shock may damage the panel or cause a malfunction.

②Do not press hard on the LCD panel surface.

In the LCD panel, the gap between two glass plates is kept precisely and uniformly to maintain display's characteristics and reliability. If this panel is pressed hard, the following troubles occurs.

(a) Ununiformity of color
(b) Orientation of liquid crystal becomes disordered

Problem (a) returns to normal after a while. Problem (b) returns to normal if power is shut off once then turned on again.
However these operations should be avoided to insure reliability.

③Do not scratch the polarizer film on the LCD panel surface.

- Do not press or rub the display surface with a hard tool, pincet, etc.
- For handling, use cotton or conductive gloves so that the display surface is not stained.
- For If the display surface is stained by dust or dirt, clean it as follows with a soft cloth (deer skin, etc.)

[Dust] Wipe off with a soft cloth. (do not rub.)
[Dirt] Wipe off lightly with a soft cloth after soaking in the clear water and squeezing hard out of water drops. Only if the dirt is hardly wiped off, use isopropyl alcohol or ethanol.
Be careful not to splash the water or the solvent and water penetrated between the polarizer and the LCD panel.
Do not use solvents such as ketone (acetone, etc.) and aromatics (xylene, toluene, etc.)

- If saliva or water drops are left for long time, it may deform partial deformation or discolored. Wipe off immediately in the same way as for dirt.
- Do not allow oil to adhere to the module, since the cleaning of oil is difficult.

④ Do not place or contact objects on the display surface for a long period of time.

That's because this may make some parts of the LCD module distorted and the display quality may decline.

(3) Handling of LCD module

①Do not pull the cold-cathode tube cable strongly.
If the cable is pulled with the loaf of 2kg or more, the cable may be damaged or reliability may decrease.

②Assemble the module into user's system in a dust free environment.
If conductive foreign matter adheres to the module, failures may occur.

③Take anti-static measures for assembling the module.
Since the LCD module contains CMOS-ICs, the following considerations are necessary.

- For assembling the module, operator should be grounded and wear cotton or conductive gloves.
- Floor of work area and work table to assemble the LCD module should be covered with electrostatic shielding in order to discharge static electricity via an earth wire.
- If necessary, ground operation tools (soldering iron, radio pliers, pincet, etc.).
- Do not take the module out of the conductive bag until the time when the module is assembled.
- Assemble the module under low humidity (50%RH or less).

④Do not pull the connecting cable on the rear face of the LCD module strongly.

⑤Do not disassemble or remodel the LCD module.
If this LCD module is disassembled or remodeled, it may have some trouble, or the display quality and reliability may not be assured.

(4) Precautions for operating the LCD module

① Adhere to the specified power supply sequence.
If not followed, the CMOS-IC may cause a latch-up, or the DC voltage may be applied the liquid crystal, and a failure or serious deterioration in display quality may occur.

② Do not operate the LCD module when condensation is present.
If the LCD module is operated when condensation is on the terminals of the LCD panel, the terminals cause electrochemical reaction, and may reach disconnection. Condensation easily occurs especially when the module is moved from a cold environment to a warm environment.

③ Trouble that occurs when the LCD module is used at not recommended temperature.

- Operation at high temperature(>60ºC) :Display colors shift to blue.
- Storage at high temperature(>60ºC) :The polarizer film deteriorates and contras decreases.
- Operation at low temperature(<0ºC) :The response speed decreases considerably.
- Storage at low temperature (<-20ºC) :The liquid crystal may solidify and become damaged.

④ Always input the control signals at the correct timing.
If control signals (DCLK, or ENAB) are not input, or if the timing is out of the specified timing, DC voltage may be applied to the liquid crystal and, as a result, cause image sticking or deterioration of contrast.

(5) Precautions on designing module mounting

①Do not press the display surface and bottom face of the LCD module.
Display quality or reliability may be deteriorated if the installation of the LCD module is inappropriate and, as a result, excessive pressure is applied to the surface of LCD screen. Brightness uniformity or the reliability of CCFL may decrease if the pressure is applied to the backlight module.

②Consider the module mounting design, so that twisting and bending do not occur to the LCD module.
Excessive twisting and bending may damage display quality and reliability.

③The power cable length between the LCD module and inverter should not be extended.
Otherwise the backlight may not light or flickering may occur.

④Do not make the power cable of the backlight clung to a metal plate, etc.
Backlight frequency current for backlight driving may leak to the metal and desired brightness may not be assured.

⑤When Mounting LCD module with M4 screw(x4) should be screw up under 5.75kgf·cm torque.

(6) Storage method

①Do not store the LCD module in an atmosphere of organic solvent or corrosive gas.
In an organic solvent atmosphere, the polarizer film discolors and display quality deteriorates.
In a corrosive gas environment, various problems may occur.

②Store the LCD module in a Fujitsu package.
At storing, Fujitsu packages can be stacked up to 4 boxes.
The LCD module is in an anti-static bag. Keep the module in that status.

③It is recommended that the storage environment should be humidity controlled, cool and dark.
Recommended storage environment
- Place :Dark (avoid direct sunlight)
- Temperature : 10~35ºC
- Humidity : 50~60%RH

Note) If the module is left in an environment of 60℃ or more for a long period of time, optical characteristics may deteriorate.

(7) Storage method

① If the LCD panel is damaged, do not inhale or allow the liquid crystal to enter the mouth
If the liquid crystal contacts the body or cloths, wash it off with soap immediately. Follow precautions for regular electronic components.

② Solder flux on the printed circuit board is harmless to the quality and reliability of LCD module.
Fujitsu is practicing non-wash technology on module assembly process.

DOCUMENT CONTROL SECTION

DATE

EDIT	DATE	DESIG.	CHECK	APPR.	DESCRIPTION
DESIG.			CHECK		APPR.

FLC43XWC8V-02

Tech Bes LCD-00149

CUST.

FUJITSU DISPLAY TECHNOLOGIES CORPORATION

18. PRECAUTIONS FOR USE

This Product is designed, developed and manufactured as contemplated for general use, including without limitation, general office use, personal use, household use, and ordinary industrial use, but is not designed, developed and manufactured as contemplated for use accompanying fatal risks or dangers that, unless extremely high safety is secured, could lead directly to death, personal injury, severe physical damage or other loss (hereinafter "High Safety Required Use"), including without limitation, nuclear reaction control in nuclear facility, aircraft flight control, air traffic control, mass transport control, medical life support system, missile launch control in weapon system. If customer's product possibly falls under the category of High Safety Required Use, please consult with our sales representatives in charge before such use. In addition, FDTC shall not be liable against the customer and/or any third party for any claims or damages arising in connection with the High Safety Required Use of the Product without permission.

19. MISCELLANEOUS

Specifications of the TFT-LCD panel and other components used in the LCD module are subject to change. Both parties shall discuss together before change.
If any doubt is raised in the content of the specifications, both parties shall discuss and make best effort for the agreement.

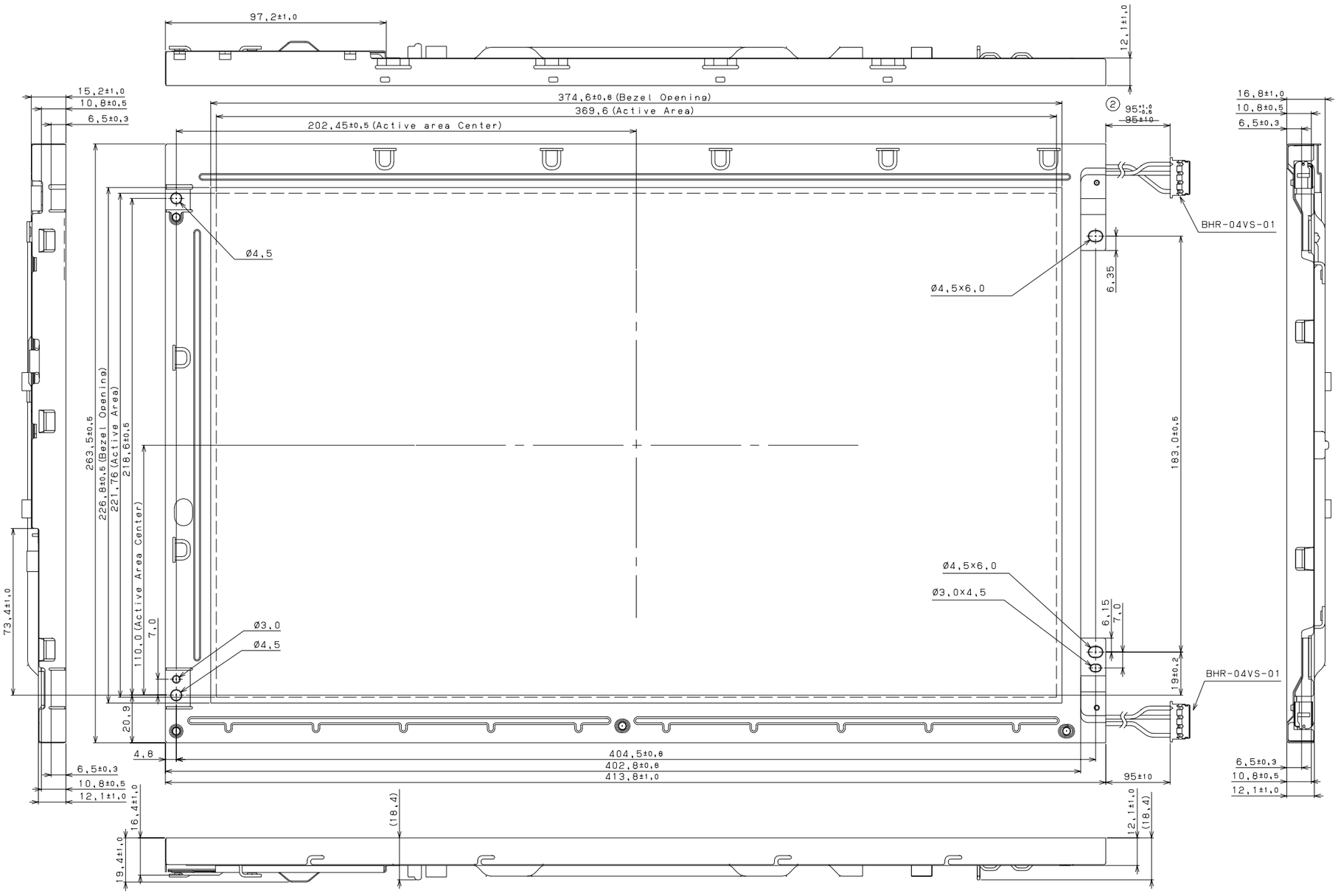

Front View

EDIT	DATE	DESIG.	CHECK	DESCRIPTION	APPR.
04	20021205			④changed	
02	20020807			②changed	

TITLE FLC43XWC8V-02

DRW. NO. Tech Bes LCD-00149

SHEET 33/33

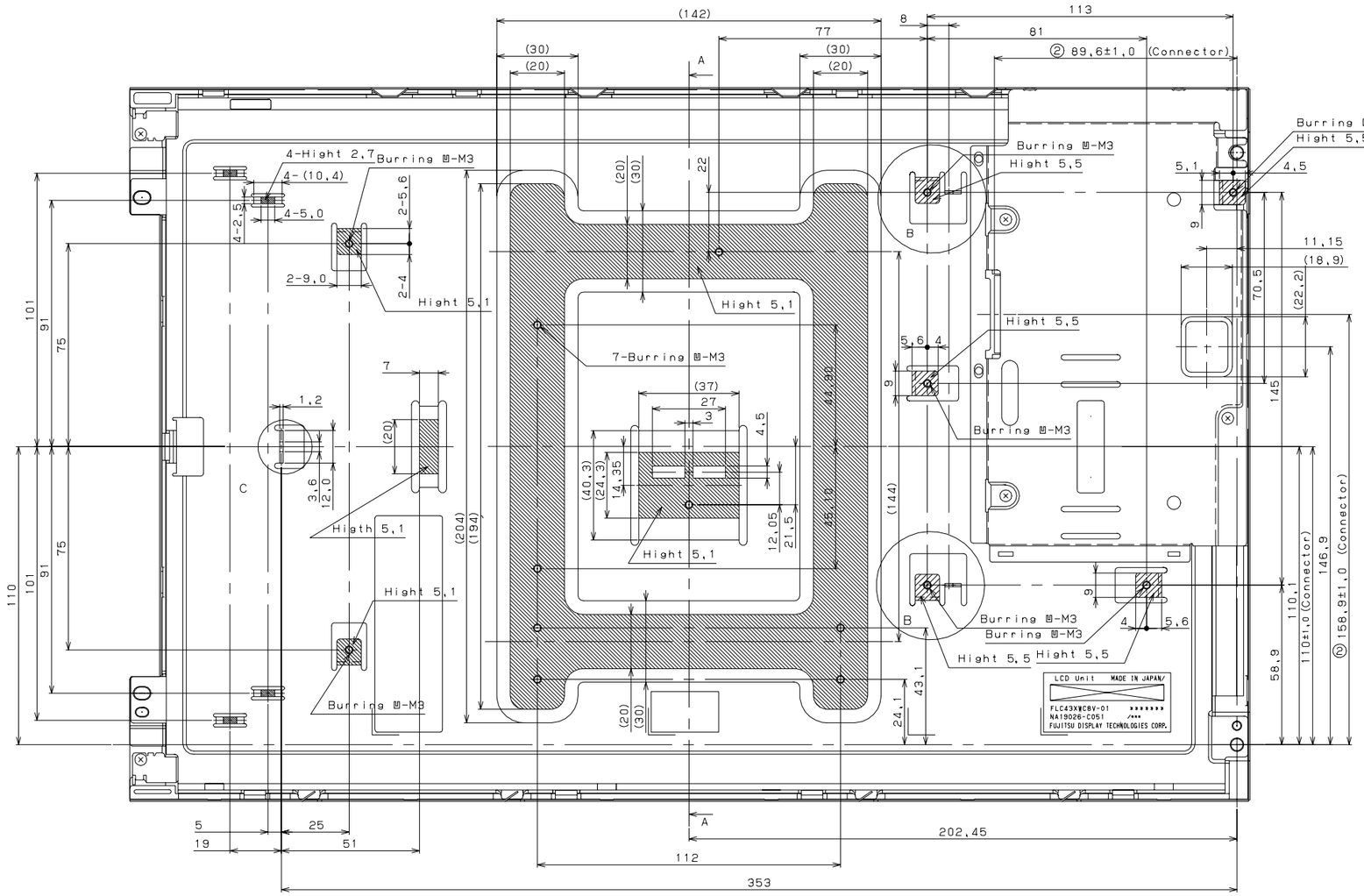

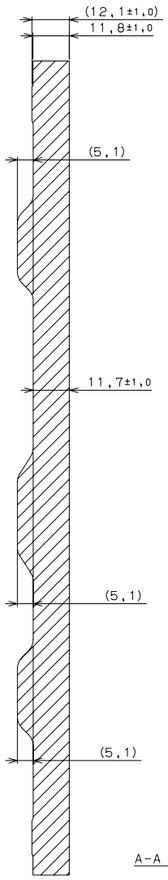

A-A Section

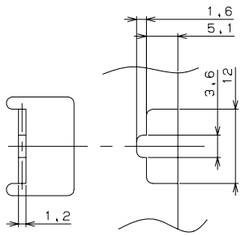

Detail C

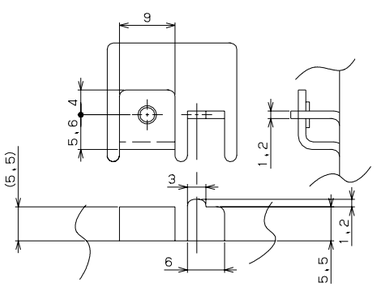

Detail B

						TITLE	FLC43XWC8V-02
04	20021205			④changed		DRAW NO.	Tech Bes LCD-00149
02	20020807			Connector position changed			
EDIT	DATE	DESIG.	CHECK	DESCRIPTION		SHEET	④34 ④34 / 33 33
DESIG.			CHECK		APPR.		