TENTATIVE

FLC51UXC8V-10

Specifications

DOCUMENT CONTROL SECTION

DATE

EDIT	DATE	DESIG.	CHECK	APPR.	DESCRIPTION
DESIG.	20021003	Furukoshi	CHECK		APPR. K.Tanaka

TITLE FLC51UXC8V-10

DRAW. NO.

CUST.

FUJITSU DISPLAY TECHNOLOGIES CORPORATION

SHEET 1/35

TENTATIVE

TABLE OF CONTENTS

DOCUMENT CONTROL SECTION

DATE

EDIT	DATE	DESIG.	CHECK	APPR.	DESCRIPTION
DESIG.			CHECK		APPR.

TITLE FLC51UXC8V-10

DRAW. NO.

CUST.

FUJITSU DISPLAY TECHNOLOGIES CORPORATION

SHEET 2/

TENTATIVE

1. APPLICATION

This specification is applied to the 20.1-inch UXGA supported TFT-LCD module.

2. PRODUCT NAME AND MODEL NUMBER

2–1 Product Name: **LCD Module**

2–2 Model Name: **FLC51UXC8V-10**

3. OVERVIEW

This LCD module has a TFT active matrix type liquid crystal panel 1600x1200 pixels, and diagonal size of 51cm(20.1-inch). This LCD has a LVDS dual interface and can display 16,777,216 colors.

The power supply of this LCD module is +12V DC single.

This module has the characteristics for applying TCO'99.

4. CONFIGURATION

This LCD module consists of a color TFT-LCD panel that is mounted with TFT driver ICs, a cold-cathode fluorescent tube back-light.
The inverter for the backlight is not included.
Figure 4-1 shows a block diagram of this LCD module.

TENTATIVE

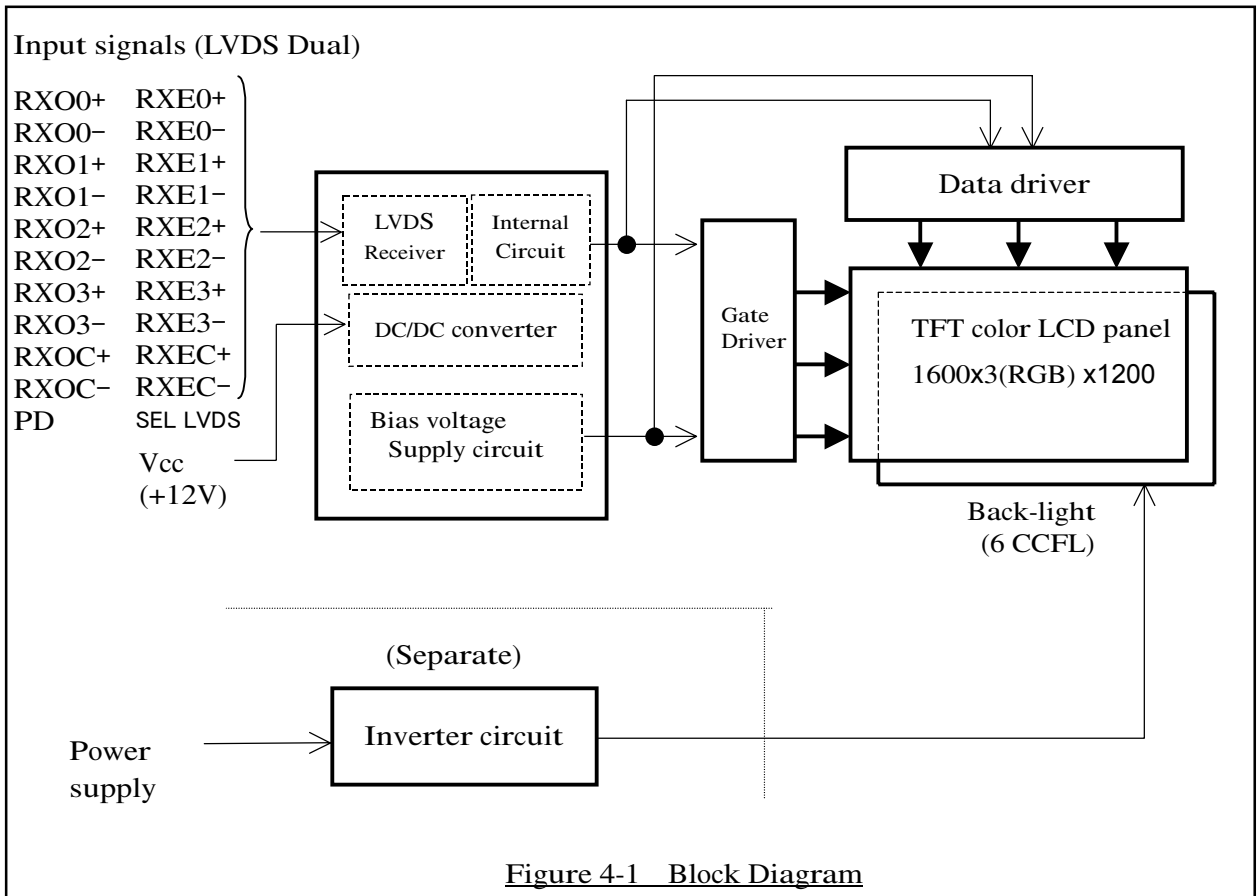

Figure 4-1 Block Diagram

5. MECHANICAL SPECIFICATIONS

Table 5-1 shows the mechanical specifications of this LCD module.

Table 5-1 Mechanical Specifications

Item	Specifications	Unit	Remark
Dimensions	432x331.5x25(TYP.)	mm	Edge type back-light is used. (ϕ2.6 CCFLx6)
Display Resolution	(1600x3) x1200	—	Include inverter.
Display Dot Area	408.0x306.0	mm	For details on dimensions, See dimensional outline drawing. (At page 34,35)
Dot Pitch	(0.085x3)x0.255	mm	
Aspect Ratio	1:1	—	
Weight	3,700 (Typ)	g	Excluding inverter.
FG-SG	Short circuit	—	

6. ABSOLUTE MAXIMUM RATING

Table 6-1 shows the absolute maximum rating of this LCD module.

Table 6-1 Absolute Maximum Rating

Item	Symbol	Condition	MIN.	TYP.	MAX.	Unit
Supply Voltage	V_{CC}	Ta=25ºC	–0.3	—	14.0	V
	V_{INV}	Ta=25ºC	–0.3	—	14.0	V
Input Signal Voltage (LVDS signal, PD, SELL LVDS)	V_{IN}	Ta=25ºC	–0.3	—	3.6	V

7. RECOMMENDED OPERATING CONDITIONS

Table 7-1 shows the recommended operating conditions of this LCD module.

Table 7-1 Recommended Operating Conditions

Item		Symbol	MIN.	TYP.	MAX.	Unit
Supply Voltage (Logic)		V_{CC}	11.5	12.0	12.5	V
Ripple Voltage	V_{CC}	V_{RP}	—	—	0.1	V

TENTATIVE

8. ELECTRICAL SPECIFICATIONS

Table 8-1 shows the electrical specifications of this LCD module. Figure 8-1 shows the measurement circuit. Figure 8-2(A) shows the equivalent circuit of the logic signal input area. Figure 8-2(B) shows the equivalent circuit of the supply voltage Input area.

Table 8-1 Electrical Specifications

Item		Symbol	Condition		MIN.	TYP.	MAX.	Unit	Remark
Differential-input Voltage (High)		V_{IH}	V_{CM}=+1.2V	V_{CC}=+12.0±0.5V V_{SS}=0V DCLK=81MHz 60Hz	—	—	100	mV	
Differential-input Voltage (Low)		V_{IL}			–100	—	—	MV	
Supply Current		I_{CC}			—	600	1200	mA	*1
Supply Rush Current		I_{SCC}			—	—	5.8	A	*2
Supply Rush Current Duration (1A excess)		T_{SCC}			—	—	0.2.	ms	
BACK LIGHT (*3)	CCFL Turn on Voltage	V_S	f_L=50kHz, Ta=25ºC		—	(900)	T.B.D.	Vrms	
			f_L=50kHz,Ta=0ºC		—	—	(1300)		
	Lighting Voltage	V_L	f_L=50kHz I_L=6mA		—	(800)	—	Vrms	
	Lighting Frequency	f_L	V_L=700Vrms		(40)	(50)	(60)	KHz	
	Tube Current	I_L	f_L=50kHz V_L=700Vrms		(3)	(T.B.D.)	(7)	mArms	*3

(*1) Typical current situation : Color bar pattern. Vcc=12.0V
Maximum current situation: 2pixel checker pattern. Vcc=11.5V
Without rush current.

(*2) These items prescribe the rush current for starting internal DC/DC.
Charging current to capacitors of Vcc is not prescribed.

(*3) Tube current (I_L) shows the value of the current that is consumed at one lamp.
This LCD module has 4 lamps. Each 2 lamps are placed at upper side and lower side of the display.
2 lamps are connected in parallel. Each low voltage terminals are connected with separate Cable to Back-light connecter.

TENTATIVE

Measurement circuit is based on Figure 8-1.

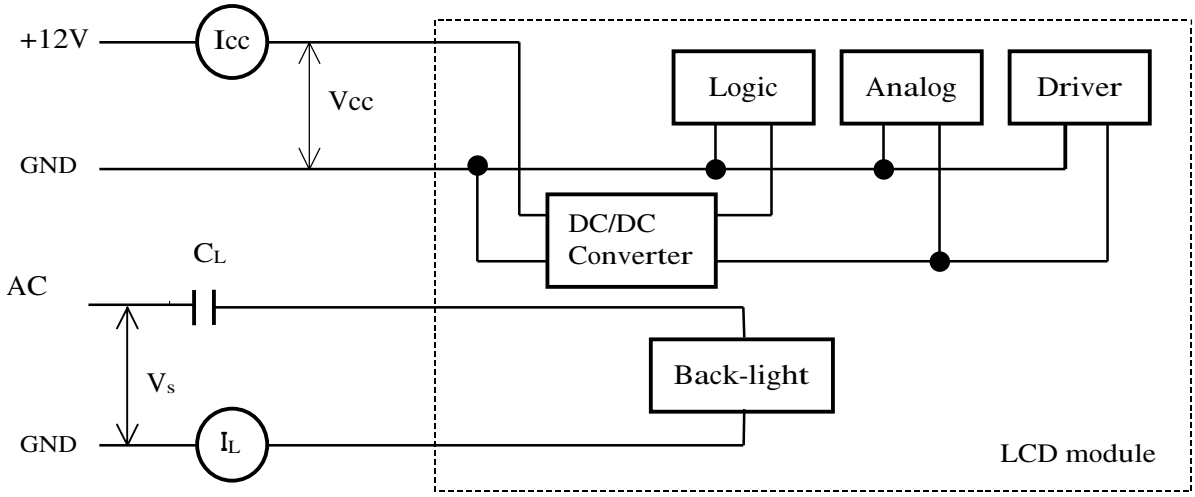

Figure 8-1 Measurement circuit

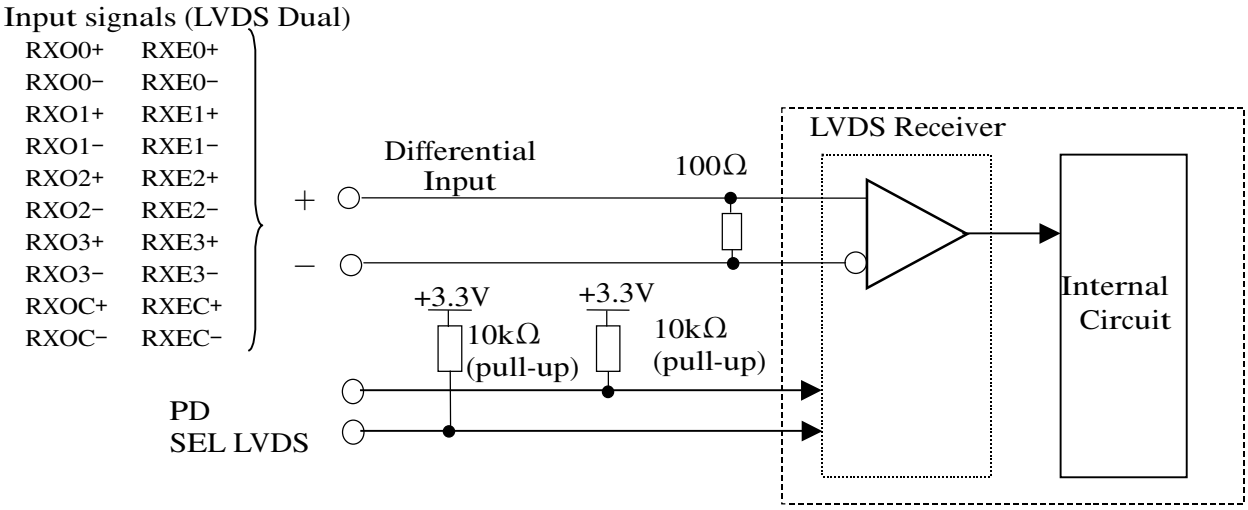

LVDS Receiver: DS90CF386 (National Semiconductor) or
THC63LVDF84B (Thine Electronics)

Figure 8-2(A) Equivalent circuit of logic signal Input

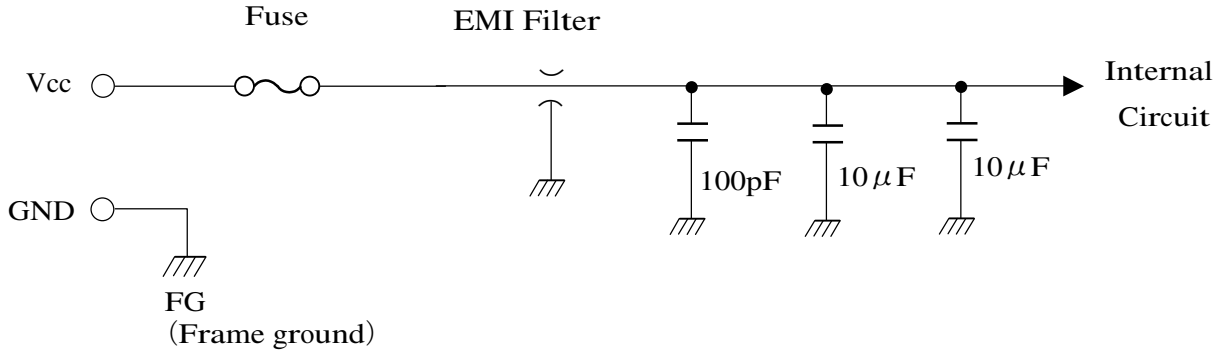

Fuse : (T.B.D)

EMI Filter : (T.B.D)

Figure 8-2(B) Equivalent circuit of power supply

DOCUMENT CONTROL SECTION

DATE

EDIT	DATE	DESIG.	CHECK	APPR.	DESCRIPTION
DESIG.			CHECK		APPR.

TITLE FLC51UXC8V-10

DRAW. NO.

CUST.

FUJITSU DISPLAY TECHNOLOGIES CORPORATION

SHEET 7/

TENTATIVE

9. OPTICAL SPECIFICATIONS

Table 9-1 shows the optical specifications of this LCD module.

Table 9-1 Optical Specifications

Ta=25°C

Item		Symbol	Condition		Specifications MIN.	Specifications TYP.	Specifications MAX.	Unit	Remark	Note
Visual Angle	Horizontal	$\theta_{L,R}$	CR≧10	$\theta_{U,D}=0°$	85	—	—	deg		(1)(2)(3)(5)(6)
	Vertical	$\theta_{U,D}$		$\theta_{L,R}=0°$	85	—	—	deg		
	All Direction	θ			—	80	—	deg		
Contrast Ratio		CR	$\theta_{L,R,U,D}=0°$		400	600	—	—	White/Black	(1)(2)(3)(5)
Response Time (ON) (B→W)		t_{on}	$\theta_{L,R,U,D}=0°$	Ta=25°C	—	15	30	ms		(1)(4)(5)
				Ta=0°C	—	50	100	ms		
Response Time (OFF) (W→B)		t_{off}	$\theta_{L,R,U,D}=0°$	Ta=25°C	—	10	25	ms		
				Ta=0°C	—	50	100	ms		
Brightness		I	$\theta_{L,R,U,D}=0°$ V_{CC}=12.0V V_{INV}=12.0V (At maximum Brightness)		200	250		cd/m²	White *1	(1)(5)
Brightness Uniformity		△I			70	—	—	%		(1)(5)(7)
Chromaticity	W	x			(0.283)	(0.313)	(0.343)	—		(1)(5)
		y			(0.299)	(0.329)	(0.359)	—		
	R	(x, y)		Red	(T.B.D.) Typ.					
	G			Green	(T.B.D.) Typ.					
	B			Blue	(T.B.D.) Typ.					
LCD Panel Type					TFT Color					
Display Mode					Normally Black					
Wide Viewing Angle Technology					MVA					
Optimum Viewing Angle					— (Symmetry)					(6)
Display Color					16,777,216 (8-bit color)					
Color of non-display area					Black					
Surface Treatment					Anti-glare (Haze value: (25%), 2H)					

(*1) Value at 15～20 minutes after lighting on.

(Note) ・CS-1000 (MINOLTA Co. Ltd.), BM-5A (Topcon) and the like should be used as a luminance colorimeter.
Field=1°, L=500mm
・Back-light current = 6mA, Dark room condition (1 lux or less)

DOCUMENT CONTROL SECTION

DATE

EDIT	DATE	DESIG.	CHECK	APPR.	DESCRIPTION
DESIG.			CHECK		APPR.

TITLE FLC51UXC8V-10

DRAW. NO.

CUST.

FUJITSU DISPLAY TECHNOLOGIES CORPORATION

TENTATIVE

Note 1) Definition of Viewing Angle (1)

Based on Figure 9-1.

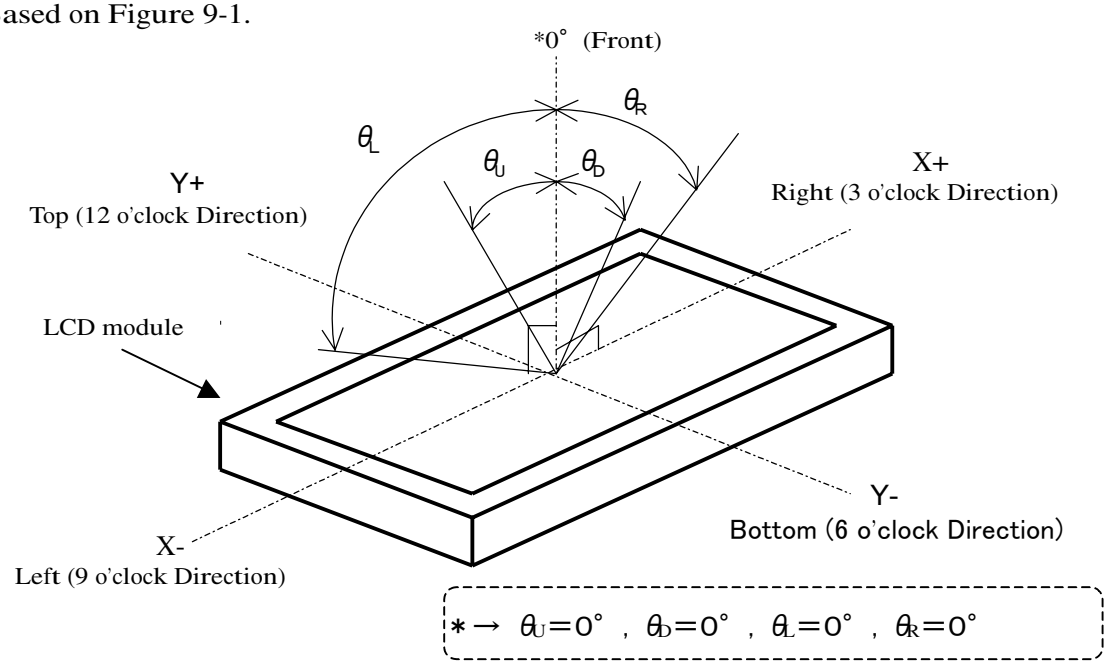

Figure 9-1 Definition of Viewing Angle (1)

Note 2) Definition of Viewing Angle (2)

Based on Figure 9-2.

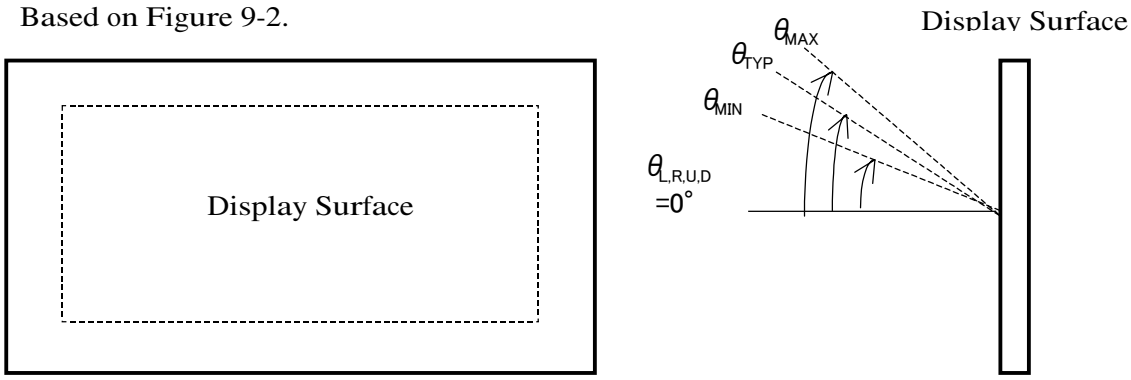

Figure 9-2 Definition of Viewing Angle (2)

Note 3) Definition of Contrast Ratio (CR)

Determined by Formula (1) based on Figure 9-3 Voltage-Brightness characteristics.

$$= \frac{L_W \text{ (Brightness at white)}}{L_B \text{ (Brightness at black)}} \quad \cdots\cdots(1)$$

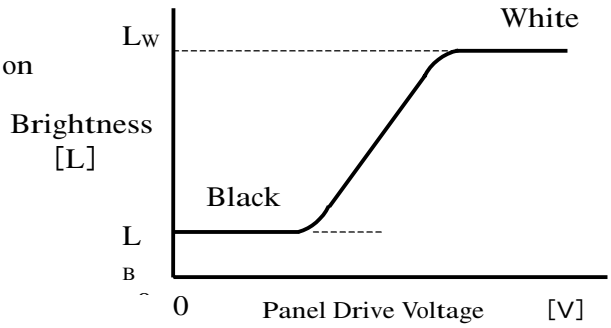

Figure 9-3 Voltage-Brightness Characteristics

DOCUMENT CONTROL SECTION

DATE

EDIT	DATE	DESIG.	CHECK	APPR.	DESCRIPTION
DESIG.			CHECK		APPR.

TITLE FLC51UXC8V-10

DRAW. NO.

CUST.

FUJITSU DISPLAY TECHNOLOGIES CORPORATION

SHEET 9 /

TENTATIVE

Note 4) Definition of Response Time

Based on Figure 9-4.

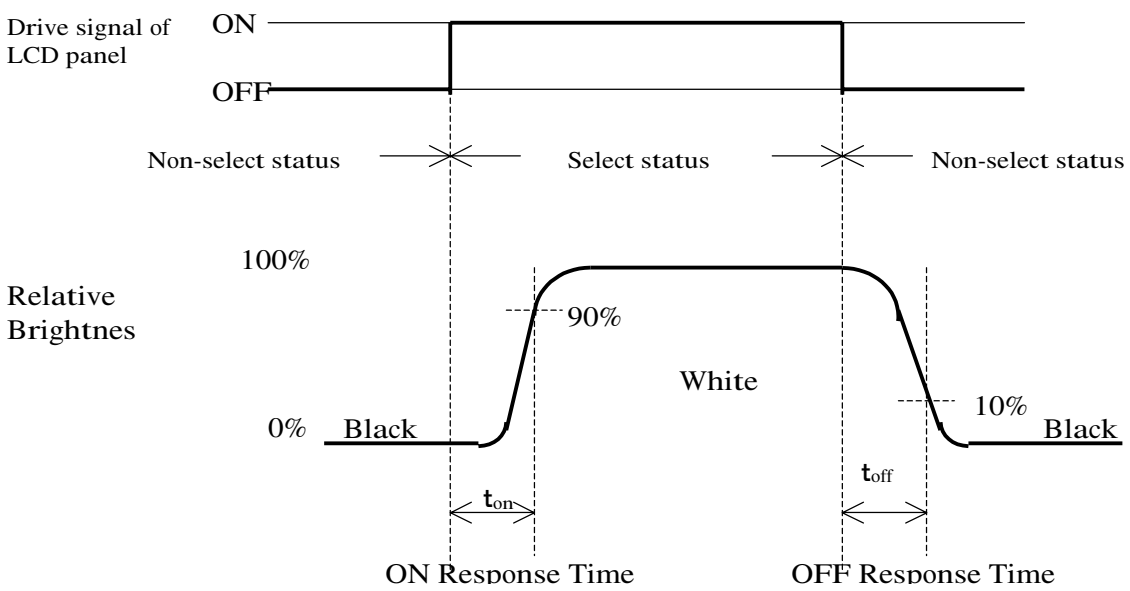

Figure 9-4 Definition of Response Time

Note 5) Contrast Ratio and Response Measurement System

Based on Figure 9-5.

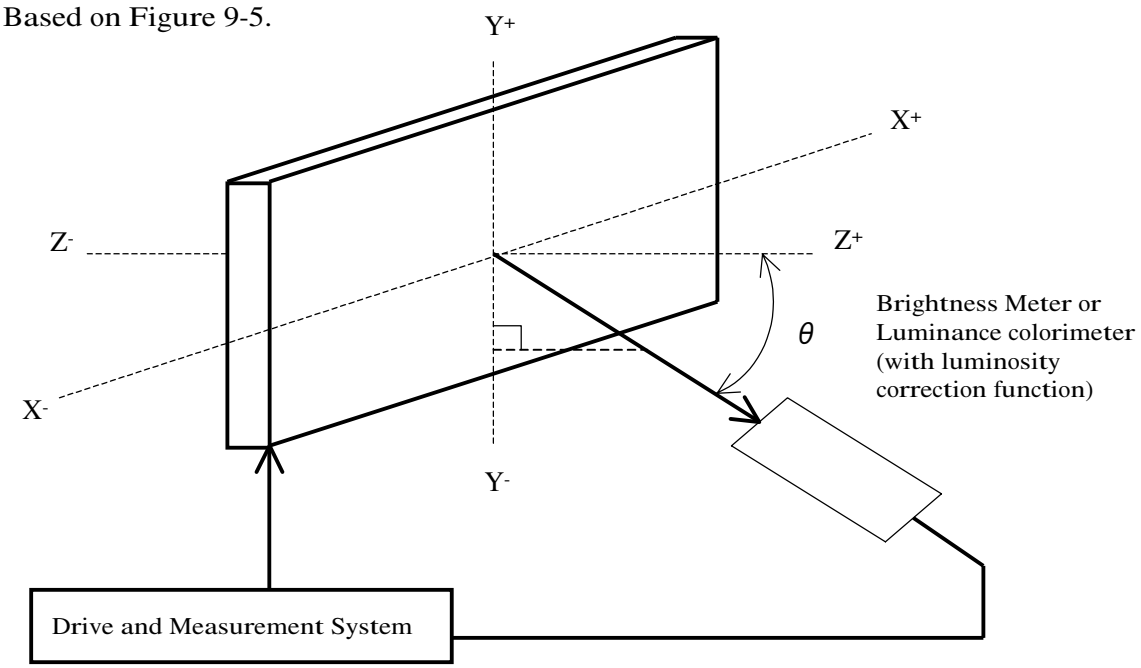

Figure 9-5 Contrast Ratio and Response Time Measurement System

DOCUMENT CONTROL SECTION

DATE

EDIT	DATE	DESIG.	CHECK	APPR.	DESCRIPTION
DESIG.			CHECK		APPR.

TITLE FLC51UXC8V-10

DRAW. NO.

CUST.

FUJITSU DISPLAY TECHNOLOGIES CORPORATION

SHEET 10/

TENTATIVE

Note 6) Definition of Optimum Viewing Angle

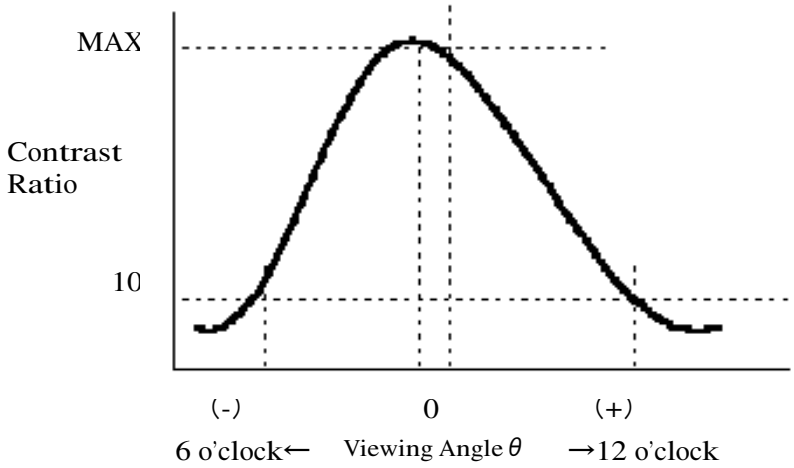

Figure 9-6 Definition of Viewing Angle

Note 7) Definition of Brightness Uniformity

Brightness uniformity is defined by the following formula.
Brightness (I1～I9) art measured at the following 9 points (①～⑨) on the display area that is shown in Figure 9-7.

$$\text{Brightness Uniformity } (\Delta L) = \frac{|\text{Min. In}|}{|\text{Max. In}|} \times 100\ (\%),\ n = 1 \text{ to } 9$$

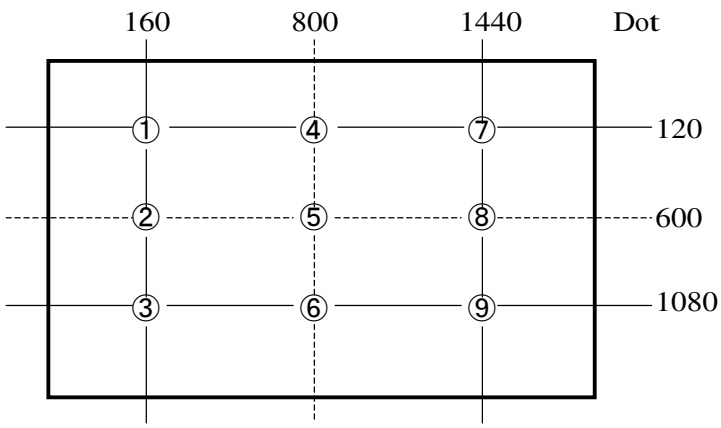

Note) Each measurement point (①～⑨) defines the center spot of view of Brightness Meter.
The tolerance of measurement position is±3mm.

Figure 9-7 Measurement Points

DOCUMENT CONTROL SECTION

DATE

EDIT	DATE	DESIG.	CHECK	APPR.	DESCRIPTION
DESIG.			CHECK		APPR.

TITLE FLC51UXC8V-10

DRAW. NO.

CUST.

FUJITSU DISPLAY TECHNOLOGIES CORPORATION

SHEET 11/

TENTATIVE

10. INTERFACE SPECIFICATIONS

10-1 Signal descriptions

Table 10-1 shows the description and configuration of interface signals (CN1).

Table 10-1 Interface signals (CN1)

Pin No.	Symbol	I/O	Function
1	Vcc	—	+12V power supply
2	Vcc	—	+12V power supply
3	Vcc	—	+12V power supply
4	TST	—	Test pin *2
5	PD	I	LVDS Core Power Down
6	SELL LVDS	I	Select LVDS data order *1
7	GND	—	Ground
8	RxE3+	I	Positive differential input
9	RxE3−	I	Negative differential input
10	RxEC+	I	Positive differential input
11	RxEC−	I	Negative differential input
12	RxE2+	I	Positive differential input
13	RxE2−	I	Negative differential input
14	GND	—	Ground
15	RxE1+	I	Positive differential input
16	RxE1−	I	Negative differential input
17	GND	—	Ground
18	RxE0+	I	Positive differential input
19	RxE0−	I	Negative differential input
20	RxO3+	I	Positive differential input
21	RxO3−	I	Negative differential input
22	RxOC+	I	Positive differential input
23	RxOC−	I	Negative differential input
24	GND	—	Ground
25	RxO2+	I	Positive differential input
26	RxO2−	I	Negative differential input
27	RxO1+	I	Positive differential input
28	RxO1−	I	Negative differential input
29	RxO0+	I	Positive differential input
30	RxO0−	I	Negative differential input

Connector : FI-X30S-HF (Japan Aviation Electronics)
User's connector : FI-X30M (Japan Aviation Electronics)
FI-X30H
FI-X30C

*1: 3.3V CMOS Signal input. (High or Low)
*2: Keep open. (Internal test use only.)

TENTATIVE

10-2 LVDS Data Assignment

Table 10-2 shows the LVDS Data Assignment.

Table 10-2 LVDS Data Assignment

Input signal *1			Transmitter DS90CF383,C385		Interface connector			Receiver DS90CF386		LCD input (Sel LVDS)	
SEL LVDS	Low	High	pin	INPUT	System side	LCD module pin		pin	OUTPUT	Low	High
LVDS Odd	RO2	RO0	51	TxIN0	Tx OUT0+	2	RxO0+	27	RxOUT0	RO2	RO0
	RO3	RO1	52	TxIN1				29	RxOUT1	RO3	RO1
	RO4	RO2	54	TxIN2				30	RxOUT2	RO4	RO2
	RO5	RO3	55	TxIN3	Tx OUT0−	1	RxO0−	32	RxOUT3	RO5	RO3
	RO6	RO4	56	TxIN4				33	RxOUT4	RO6	RO4
	RO7	RO5	3	TxIN6				35	RxOUT6	RO7	RO5
	GO2	GO0	4	TxIN7				37	RxOUT7	GO2	GO0
	GO3	GO1	6	TxIN8	Tx OUT1+	4	RxO1+	38	RxOUT8	GO3	GO1
	GO4	GO2	7	TxIN9				39	RxOUT9	GO4	GO2
	GO5	GO3	11	TxIN12				43	RxOUT12	GO5	GO3
	GO6	GO4	12	TxIN13	Tx OUT1−	3	RxO1−	45	RxOUT13	GO6	GO4
	GO7	GO5	14	TxIN14				46	RxOUT14	GO7	GO5
	BO2	BO0	15	TxIN15				47	RxOUT15	BO2	BO0
	BO3	BO1	19	TxIN18				51	RxOUT18	BO3	BO1
	BO4	BO2	20	TxIN19	Tx OUT2+	6	RxO2+	53	RxOUT19	BO4	BO2
	BO5	BO3	22	TxIN20				54	RxOUT20	BO5	BO3
	BO6	BO4	23	TxIN21				55	RxOUT21	BO6	BO4
	BO7	BO5	24	TxIN22	Tx OUT2−	5	RxO2−	1	RxOUT22	BO7	BO5
	RSVD	RSVD	27	TxIN24				3	RxOUT24	Not use	Not use
	RSVD	RSVD	28	TxIN25				5	RxOUT25	Not use	Not use
	ENAB	ENAB	30	TxIN26				6	RxOUT26	ENAB	ENAB
	RO0	RO6	50	TxIN27	Tx OUT3+	11	RxO3+	7	RxOUT27	RO0	RO6
	RO1	RO7	2	TxIN5				34	RxOUT5	RO1	RO7
	GO0	GO6	8	TxIN10				41	RxOUT1	GO0	GO6
	GO1	GO7	10	TxIN11				42	RxOUT11	GO1	GO7
	BO0	BO6	16	TxIN16	Tx OUT3−	10	RxO3−	49	RxOUT16	BO0	BO6
	BO1	BO7	18	TxIN17				50	RxOUT17	BO1	BO7
	RSVD	RSVD	25	TxIN23				2	RxOUT23	Not use	Not use
	DCLK		31	TxCLK IN	TxCLK OUT+ TxCLK OUT−	9 8	RxCLK IN+ RxCLK IN−	26	RxCLK OUT	DCLK	
LVDS Even	RE2	RE0	51	TxIN0	Tx OUT0+	13	RxE0+	27	RxOUT0	RE2	RE0
	RE3	RE1	52	TxIN1				29	RxOUT1	RE3	RE1
	RE4	RE2	54	TxIN2				30	RxOUT2	RE4	RE2
	RE5	RE3	55	TxIN3	Tx OUT0−	12	RxE0−	32	RxOUT3	RE5	RE3
	RE6	RE4	56	TxIN4				33	RxOUT4	RE6	RE4
	RE7	RE5	3	TxIN6				35	RxOUT6	RE7	RE5
	GE2	GE0	4	TxIN7				37	RxOUT7	GE2	GE0
	GE3	GE1	6	TxIN8	Tx OUT1+	16	RxE1+	38	RxOUT8	GE3	GE1
	GE4	GE2	7	TxIN9				39	RxOUT9	GE4	GE2
	GE5	GE3	11	TxIN12				43	RxOUT12	GE5	GE3
	GE6	GE4	12	TxIN13	Tx OUT1−	15	RxE1−	45	RxOUT13	GE6	GE4
	GE7	GE5	14	TxIN14				46	RxOUT14	GE7	GE5
	BE2	BE0	15	TxIN15				47	RxOUT15	BE2	BE0
	BE3	BE1	19	TxIN18				51	RxOUT18	BE3	BE1
	BE4	BE2	20	TxIN19	Tx OUT2+	19	RxE2+	53	RxOUT19	BE4	BE2
	BE5	BE3	22	TxIN20				54	RxOUT20	BE5	BE3
	BE6	BE4	23	TxIN21				55	RxOUT21	BE6	BE4
	BE7	BE5	24	TxIN22	Tx OUT2−	18	RxE2−	1	RxOUT22	BE7	BE5
	RSVD	RSVD	27	TxIN24				3	RxOUT24	Not use	Not use
	RSVD	RSVD	28	TxIN25				5	RxOUT25	Not use	Not use
	RSVD	RSVD	30	TxIN26				6	RxOUT26	Not use	Not use
	RE0	RE6	50	TxIN27	Tx OUT3+	23	RxE3+	7	RxOUT27	RE0	RE6
	RE1	RE7	2	TxIN5				34	RxOUT5	RE1	RE7
	GE0	GE6	8	TxIN10				41	RxOUT10	GE0	GE6
	GE1	GE7	10	TxIN11				42	RxOUT11	GE1	GE7
	BE0	BE6	16	TxIN16	Tx OUT3−	22	RxE3−	49	RxOUT16	BE0	BE6
	BE1	BE7	18	TxIN17				50	RxOUT17	BE1	BE7
	RSVD		25	TxIN23				2	RxOUT23	Not use	Not use
	DCLK		31	TxCLK IN	TxCLK OUT+ TxCLK OUT−	21 20	RxCLK IN+ RxCLK IN−	26	RxCLK OUT	Not use	

*1 ・RSVD (reserved) pin on a transmitter should be connected with Ground.

・Input odd or even data depending on the display position of the LCD module.

TENTATIVE

10-3 Color Data Assignment

Table 10-3 shows the Color Data Assignment.

Table 10-3 Color Data Assignment

Color			R Input data								G Input data								B Input data							
	Odd		R7	R6	R5	R4	R3	R2	R1	R0	G7	G6	G5	G4	G3	G2	G1	G0	B7	B6	B5	B4	B3	B2	B1	B0
	Even		R7	R6	R5	R4	R3	R2	R1	R0	G7	G6	G5	G4	G3	G2	G1	G0	B7	B6	B5	B4	B3	B2	B1	B0
Basic Color	Black		0	0	0	0	0	0	0	0	0	0	0	0	0	0	0	0	0	0	0	0	0	0	0	0
	Blue		0	0	0	0	0	0	0	0	0	0	0	0	0	0	0	0	1	1	1	1	1	1	1	1
	Green		0	0	0	0	0	0	0	0	1	1	1	1	1	1	1	1	0	0	0	0	0	0	0	0
	Cyan		0	0	0	0	0	0	0	0	1	1	1	1	1	1	1	1	1	1	1	1	1	1	1	1
	Red		1	1	1	1	1	1	1	1	0	0	0	0	0	0	0	0	0	0	0	0	0	0	0	0
	Magenta		1	1	1	1	1	1	1	1	0	0	0	0	0	0	0	0	1	1	1	1	1	1	1	1
	Yellow		1	1	1	1	1	1	1	1	1	1	1	1	1	1	1	1	0	0	0	0	0	0	0	0
	White		1	1	1	1	1	1	1	1	1	1	1	1	1	1	1	1	1	1	1	1	1	1	1	1
Red	Black	0	0	0	0	0	0	0	0	0	0	0	0	0	0	0	0	0	0	0	0	0	0	0	0	0
	⇧	1	0	0	0	0	0	0	0	1	0	0	0	0	0	0	0	0	0	0	0	0	0	0	0	0
	⇧	:	:	:	:	:	:	:	:	:	:	:	:	:	:	:	:	:	:	:	:	:	:	:	:	:
		:	:	:	:	:	:	:	:	:	:	:	:	:	:	:	:	:	:	:	:	:	:	:	:	:
	⇩	:	:	:	:	:	:	:	:	:	:	:	:	:	:	:	:	:	:	:	:	:	:	:	:	:
	Brighter	253	1	1	1	1	1	1	0	1	0	0	0	0	0	0	0	0	0	0	0	0	0	0	0	0
	⇩	254	1	1	1	1	1	1	1	0	0	0	0	0	0	0	0	0	0	0	0	0	0	0	0	0
	Red	255	1	1	1	1	1	1	1	1	0	0	0	0	0	0	0	0	0	0	0	0	0	0	0	0
Green	Black	0	0	0	0	0	0	0	0	0	0	0	0	0	0	0	0	0	0	0	0	0	0	0	0	0
	⇧	1	0	0	0	0	0	0	0	0	0	0	0	0	0	0	0	1	0	0	0	0	0	0	0	0
	⇧	:	:	:	:	:	:	:	:	:	:	:	:	:	:	:	:	:	:	:	:	:	:	:	:	:
		:	:	:	:	:	:	:	:	:	:	:	:	:	:	:	:	:	:	:	:	:	:	:	:	:
	⇩	:	:	:	:	:	:	:	:	:	:	:	:	:	:	:	:	:	:	:	:	:	:	:	:	:
	Brighter	253	0	0	0	0	0	0	0	0	1	1	1	1	1	1	0	1	0	0	0	0	0	0	0	0
	⇩	254	0	0	0	0	0	0	0	0	1	1	1	1	1	1	1	0	0	0	0	0	0	0	0	0
	Green	255	0	0	0	0	0	0	0	0	1	1	1	1	1	1	1	1	0	0	0	0	0	0	0	0
Blue	Black	0	0	0	0	0	0	0	0	0	0	0	0	0	0	0	0	0	0	0	0	0	0	0	0	0
	⇧	1	0	0	0	0	0	0	0	0	0	0	0	0	0	0	0	0	0	0	0	0	0	0	0	1
	⇧	:	:	:	:	:	:	:	:	:	:	:	:	:	:	:	:	:	:	:	:	:	:	:	:	:
		:	:	:	:	:	:	:	:	:	:	:	:	:	:	:	:	:	:	:	:	:	:	:	:	:
	⇩	:	:	:	:	:	:	:	:	:	:	:	:	:	:	:	:	:	:	:	:	:	:	:	:	:
	Brighter	253	0	0	0	0	0	0	0	0	0	0	0	0	0	0	0	0	1	1	1	1	1	1	0	1
	⇩	254	0	0	0	0	0	0	0	0	0	0	0	0	0	0	0	0	1	1	1	1	1	1	1	0
	Blue	255	0	0	0	0	0	0	0	0	0	0	0	0	0	0	0	0	1	1	1	1	1	1	1	1

Note.1) Definition of gray scale:Color (n)…"n" indicates gray scale level.
Larger number means brighter level.
Note.2) Data; 1:High, 0:Low

Note 3) Color data consist of 8 bit red, green and blue data of odd and even number pixel data. Total data number is 48 signals. This module is able to display 16,777,216 colors because each red, green and blue data is controlled independently.

TENTATIVE

10-4 Input Signal Timing

Table 10-4 and Figure 10-1 shows the Input Signal Timing at LVDS transmitter.

Table 10-4 Timing Characteristics (Ta=0~45°C, Vcc=12±0.5V)

Item		Symbol	Min.	Typ.	Max.	Unit	Remark
DCLK signal (Clock)	Period	Tc	11.765	12.345	20.000	ns	
	Frequency	1/Tc	50.000	81.000	85.000	MHz	
	Duty	Tch/Tc	45	50	55	%	
	High time	TclkH	3.5	—	—	ns	
	Low time	TclkL	3.5	—	—	ns	
DCLK-Data Timing	Setup time	Tset	3	—	—	ns	
	Hold time	Thold	2	—	—	ns	
ENAB signal	Horizontal Period	Th	865*1	1080	1130*1	DCLK	
	Hor. Period	Th	13.0	13.3	14.65	μs	
	Hor. Display period	Thd	800	800	800	DCLK	*2
	Vertical Period	Tv	1207*1	1250	1280*1	Th	
	Ver. Frequency	1/Tv	50	60	62	Hz	
		Tvd	1200	1200	1200	Hz	
	Ver. Display period					Th	
	Data-ENAB timing	Tdn	—	0	—	DCLK	*3

*1)•horizontal display position is specified by the rise of ENAB.
The data latched at falling edge of DCLK after rise of ENAB is displayed at the left edge of the display area.
•Vertical display position is specified by the rise of ENAB after low level continuation over 5500 DCLK.
The data latched at the rise of ENAB is displayed at the top line of the display area.

*2)•If the "High" level period of ENAB is less than 800 DCLK, black color is displayed at the rest of the display area.

*3)•If ENAB does not synchronize with the effective display data, the display position does not fit to the display area.

TENTATIVE

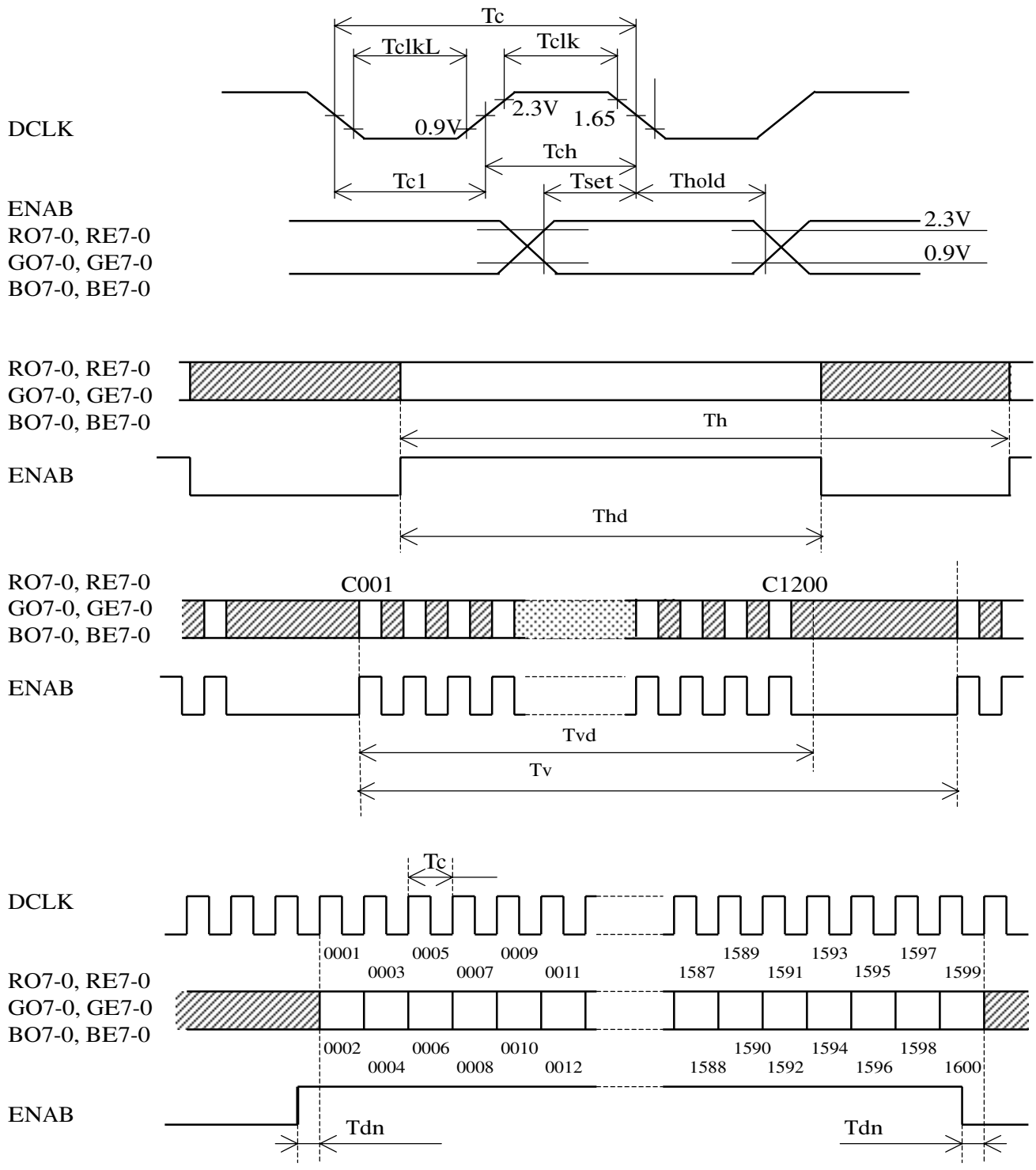

Figure 10-1 Input Signal Timing Chart

DOCUMENT CONTROL SECTION

DATE

EDIT	DATE	DESIG.	CHECK	APPR.	DESCRIPTION
DESIG.			CHECK		APPR.

TITLE FLC51UXC8V-10

DRAW. NO.

CUST.

FUJITSU DISPLAY TECHNOLOGIES CORPORATION

SHEET 16/

TENTATIVE

10-4 Correspondence between Data and Display Position

Figure 10-2 shows the Correspondence between Data and Display Position.

	S0001	S0002	S0003	S0004	S0005	S0006	S0007	----------	S4799	S4800
C001	RO 0001	GO 0001	BO 0001	RE 0002	GE 0002	BE 0002	RO 0003	GO 0003	GE 1600	BE 1600
C1200	RO 0001	GO 0001	BO 0001	RE 0002	GE 0002	BE 0002	RO 0003	GO 0003	GE 1600	BE 1600

Figure 10-2 Correspondence Data and Display Position

10-5 Power Supply Sequence

The sequence of input signals and On/Off of the power supply of this LCD module should be in the specification shown in Figure 10-3 to prevent latch-up of the driver ICs and DC driving of the LCD panel.

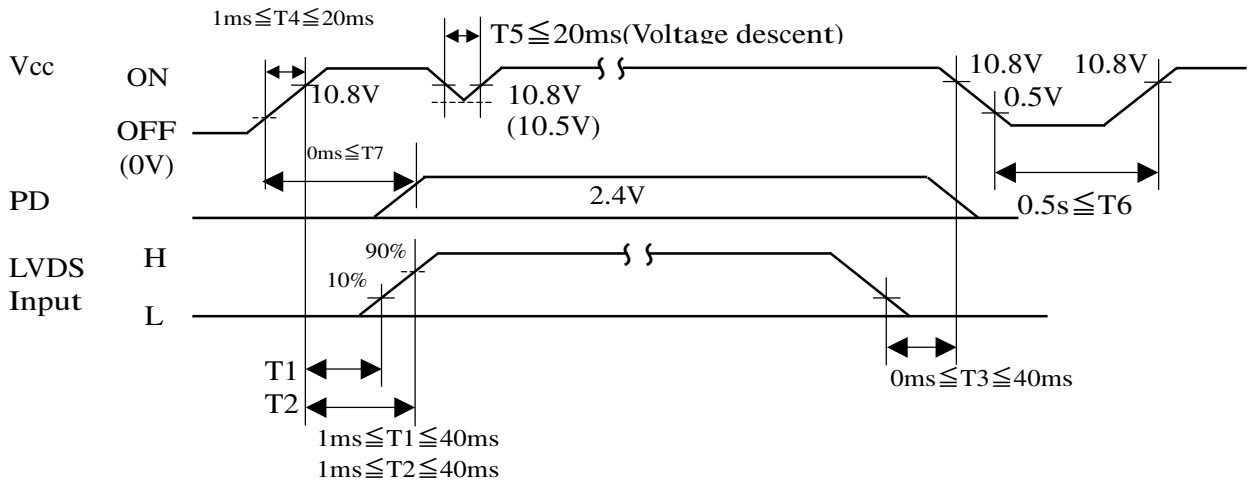

Figure 10-3 Power Supply Sequence(Logic)

DOCUMENT CONTROL SECTION

DATE

EDIT	DATE	DESIG.	CHECK	APPR.	DESCRIPTION
DESIG.			CHECK		APPR.

TITLE FLC51UXC8V-10

DRAW. NO.

CUST.

FUJITSU DISPLAY TECHNOLOGIES CORPORATION

SHEET 17/

TENTATIVE

11. BACK-LIGHT SPECIFICATION

11-1 Pin configuration for Back-light

Table 11-1 shows the description and Pin assignment of the connectors (CN-A to D) for the Back-light of this LCD module.

Table 11-1 Pin Assignment of CN-A to CN-F

Pin No.	Signal						Function	Cable Color
	CN-A	CN-B	CN-C	CN-D	CN-E	CN-F		
1	V_{L1}	V_{L2}	V_{L3}	V_{L4}	V_{L5}	V_{L6}	Power supply	Pink or Blue
2	—	—	—	—	—	—	—	—
3	GND	GND	GND	GND	GND	GND	Ground	White

Connector : Housing : BHR-03VS-1
Contact : SBH-001T-P0.5
User's Connector : Post with base: SM02(8.0)B-BHS-1-TB

Supplier : Japan Solder less Terminal Trading Company LTD. (J.S.T.)

11-2 CCFL

Supplier: Part No.

11-3 Life

The life of the back-light is a minimum of 50,000 hours at the following conditions.

(1) Working conditions

①Ambient temperature: 25±5℃
②Tube current (I_L) : (6mA or less)

(2) Definition of life

①Brightness becomes 50% or less than the minimum brightness value shown in Table 9-1.
②The lamp cannot be lit by the minimum value of the breakdown voltage(1500Vrms) shown in Table 8-1.
③Flashing.

11-4 Lamp assembly set (for replacement)

Lamp assembly set (with charge) is prepared for replacing old lamp to new one.
This set consists of an upper lamp assembly and a lower lamp assembly.

Type number:

TENTATIVE

12. APPEARANCE SPECIFICATIONS

12-1.Appearance

Table 12-1 shows the appearance specifications. In the case of another agreement about Specification arises, that agreement takes priority.

Table12-1 Appearance Specifications

Length: L[mm], Width: W[mm]
Allowable number of pieces: N, Average diameter: D [mm]

No.	Item			Judgment method and standard		Remarks
1	Foreign Particle	White and Black points		D≦0.5	N≦10	
				0.5 < D	N≦ 0	
		Fiber	Dark line	W≦0.1 L≦12.0	N≦10	
			Bright points	D≦0.3	Not count	
				0.3 < D≦0.6	N≦12	
				D> 0.6	N≦ 8	
2	Scratch	Scratch on polarizer film		12.0 > L	N≦15	
3	Dent	Dent on polarizer film		D≦0.3	Not count	
				0.3 < D≦0.4	N≦15	

Note

- Foreign particle and scratch that do not effect display image, such as foreign particle between glass and polarizer film out of the display area, scratch on metal bezel, backlight module or polarizer film out of the display area are not counted.
- Unwiped dirt out of the display area is not counted.
- These items are applied to the defects in the cell when backlight is on, and defects on the surface of the polarizer film at the display area.
- Must be observed the LCD screen from the normal direction unless specified. The distance between the LCD screen and the observing position should be 35cm or more.
  One 20W fluorescent lamp is used at 50cm above the worktable.
  At this time, the luminance at the vertical direction to the fluorescent lamp is 300 to 600 lux (reference value).
- Appearance Specifications are defined under the condition of frame frequency at 60Hz. (include Bright and Dark points specifications)

12-2.Dot defects (Bright spots, Dark spots)

12-2-1.Area to be inspected

Inside display dot area (408.0 X 306.0mm)
Display dot area means active area.
One pixel consists of 3 dots (red, green and blue).

12-2-2.Bright spots definition

(1) Bright spots are classified as follows. (based on brightness samples)
- Visible through 2% ND filter ..... High-bright spot (R,G)
- Visible through 5% but invisible through 2% ND filter ..... Low-bright spot(R,G,B)
- Invisible through 5% ND filter ..... Not counted

TENTATIVE

(2) Tears, breaks, etc in color filter visible by the light passing through.
- Bigger than a half dot ..... High bright spot
- A half dot or smaller..... Not counted

(3) Tears, breaks, etc in black matrix visible by the light passing through.
- Diameter above 50 μm..... High-bright spot
- Diameter of 50 μm or smaller ..... Not counted

12-2-3. Number of bright spot standard

Item	Entire Screen	
Brightness classification	High-bright spots	High and Low Bright Spots
Number of defects	15 or less	22 or less

NOTES：
1.Display should be all black when bright spots are counted.
2.Number of two high Bright spots connections is up to 3.
3.Number of two low Bright spots connections is up to 12.
4.Number of three Bright spots connections and two high Bright spots vertical connections is 0.
5.Number of high Bright spots and low Bright spots connections is up to 5.

12-2-4. Distance between Bright spots

- Distance between Bright spots(not include B) ..... 15 mm or more
- Distance between Bright spots(include B)..... 5 mm or more
  (Distance to the third defect should be 20mm or more)

12-2-5. Number of Dark spots standard

Item	Entire Screen
Number of defects	24 or less
Number of two dark spot connections	12 or less (Not include vertical, horizontal and diagonal connections)
Number of three dark spot connections	3 or less

NOTES：
1. Display should be all white when dark spot is counted.
2. Distance between defects is 5 mm or more.
   (Distance to the third defect should be 20mm or more)
3. If dark spot size is smaller than one dot, convert with following rule and sum up.

(a) A ＜ 1／3 : Not counted.
(b) 1／3 ≦ A ＜ 2／3 : Considered as 0.5 dot.
(c) 2／3 ≦ A : Considered as 1 dot.

(A= Dark spot size／dot size)

DOCUMENT CONTROL SECTION

DATE

EDIT	DATE	DESIG.	CHECK	APPR.	DESCRIPTION
DESIG.			CHECK		APPR.

TITLE FLC51UXC8V-10
DRAW. NO.
CUST.
FUJITSU DISPLAY TECHNOLOGIES CORPORATION
SHEET 20/

TENTATIVE

13. ENVIRONMENTAL SPECIFICATIONS

Table 13-1 show the environmental specifications.

Table 13-1 Environmental specifications

Item	Condition		Remark
Temperature	Operation	0~45ºC	Temperature on surface of LCD panel (display area.)
	Storage	–20~60ºC	
Humidity	Operation	20~85%RH	Maximum wet-bulb temperature should not exceed 29ºC. No condensation.
	Storage	5~85%RH	
Vibration	Non-operation	10~500Hz, 1octave/20minute, 2G, 1.5mm max, 1hour each X, Y and Z directions	For single module without package.
Shock	Non-operation	30G, 6ms, 1time each ±X, ±Y and ±Z directions.	

NOTE: Table 13-2 and Figure 13-1 show the shock resistance standard when module is packaged.

Table 13-2 Shock resistance standard when module is packaged

Dropping location	Dropping height	Count
A~J	60cm	1 time

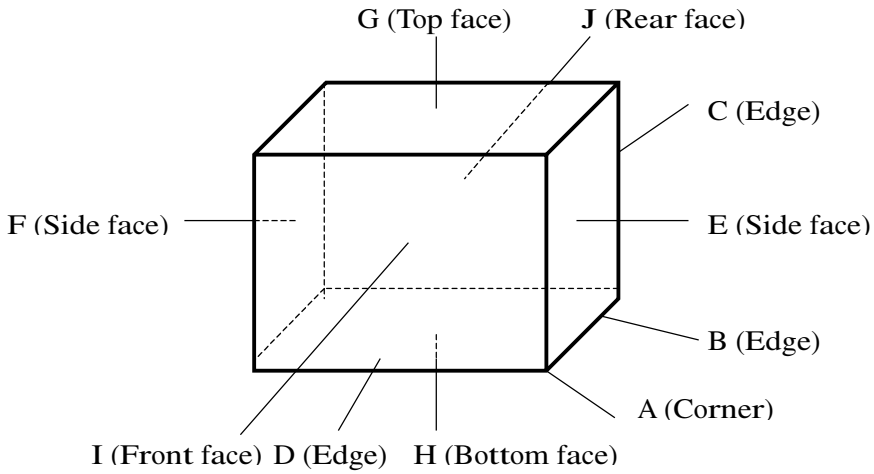

Figure 13-1 Direction to apply shock to package

TENTATIVE

14. INDICATIONS

This module has the following indications.

(1) Product name : **LCD unit**

(2) Model Number : **FLC51UXC8V-10**

(3) Product Drawing Number : **NA19025-C451**

(4) Manufacturing Number : **2 9 0 0 0 0 1**

- Serial number (To be reset every month on 1st.)
- Manufacturing month (Oct. = X, Nov. =Y, Dec. =Z)
- Last digit of manufacturing year.

(5) Version number : **01A** (Example)
-1st 2 digits "01" means operational version.
-3rd alphabet means functional version.

(6) Manufacturer Country Name : MADE IN JAPAN

(7) Company Name : **FUJITSU DISPLAY TECHNOLOGIES CORPORATION**

(8) Disposal method of cold-cathode tubes. (See Figure 14-1)

(9) Caution when changing cold-cathode tubes. (See Figure 14-2)

・THIS TFT COLOR LCD CONTAINS COLD CATHODE FLUORESCENT LAMPS. PLEASE FOLLOW LOCAL ORDINANCES OR REGULATIONS FOR ITS DISPOSAL.
・当該液晶ディスプレイユニットには蛍光管が組み込まれていますので、地方自治体の条例または規則に従って廃棄して下さい。

Figure 14-1

・WHEN CHANGING COLD CATHODE FLUORESCENT LAMPS, FOLLOW OPERATING SPECIFICATIONS. ESPECIALLY BE CAREFUL BOUT THE LAMPS SIDE-EDGE.
・蛍光管の交換は作業仕様書に従って行って下さい。特に蛍光管ホルダ側面のエッジに気をつけて下さい。

Figure 14-2

15. PACKAGING

15-1 Packing specifications

(1) 4LCD modules/1package.
(2) Weight: approximately 17kg/1package.
(3) Outline dimensions: 576mm(W)x316mm(D)x508mm(H)

15-2 Packing method

Figure 15-1,2 shows the packing method.

TENTATIVE

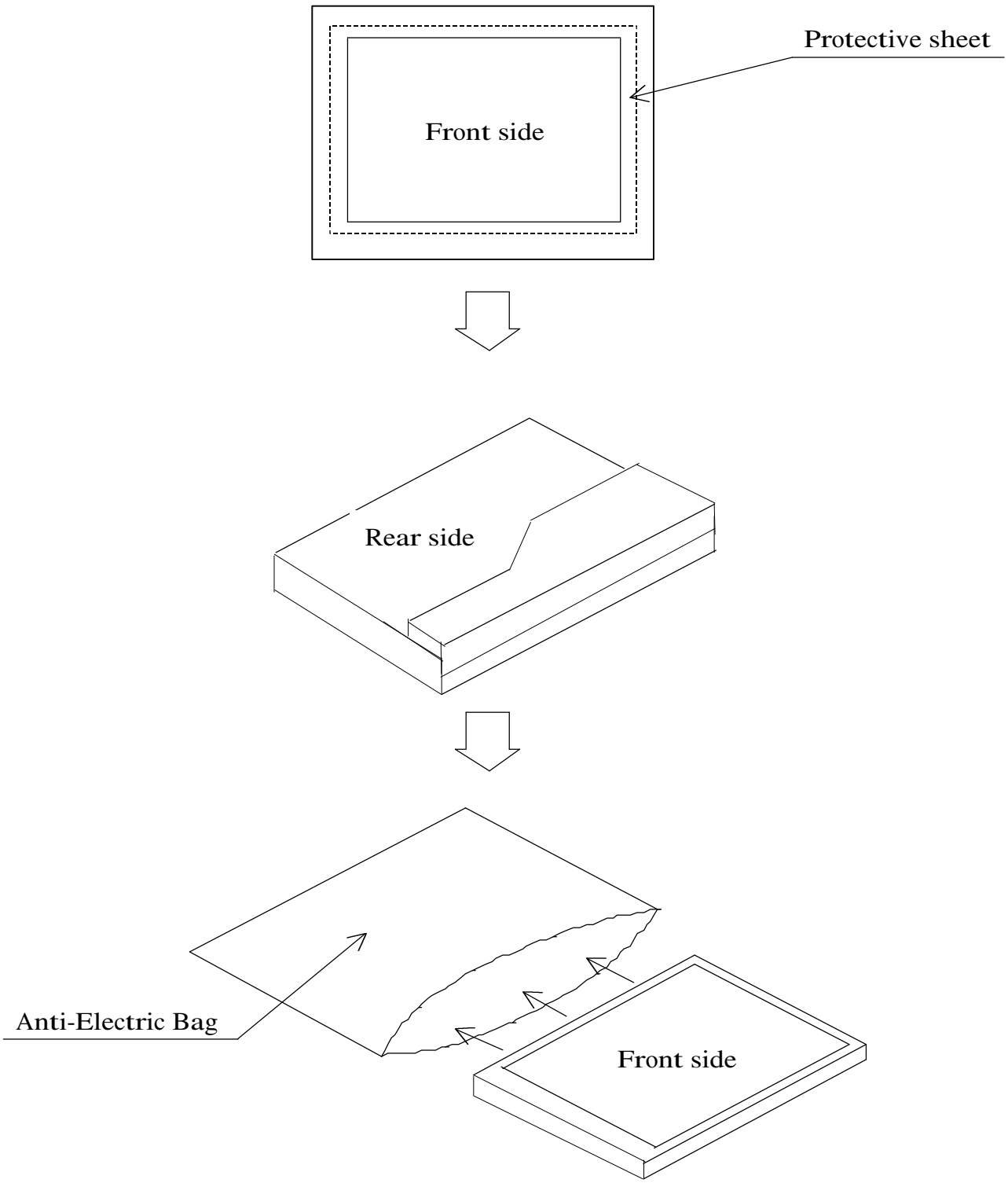

Fig.15-2 (a) Packaging Method

DOCUMENT CONTROL SECTION

DATE

EDIT	DATE	DESIG.	CHECK	APPR.	DESCRIPTION
DESIG.			CHECK		APPR.

TITLE FLC51UXC8V-10

DRAW. NO.

CUST.

FUJITSU DISPLAY TECHNOLOGIES CORPORATION

SHEET 23/

TENTATIVE

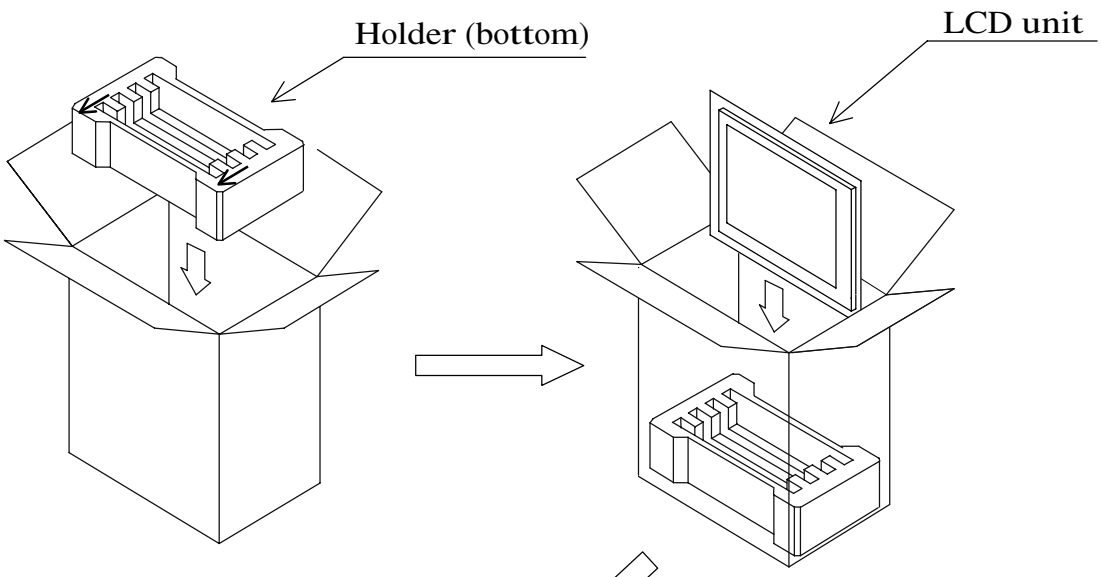

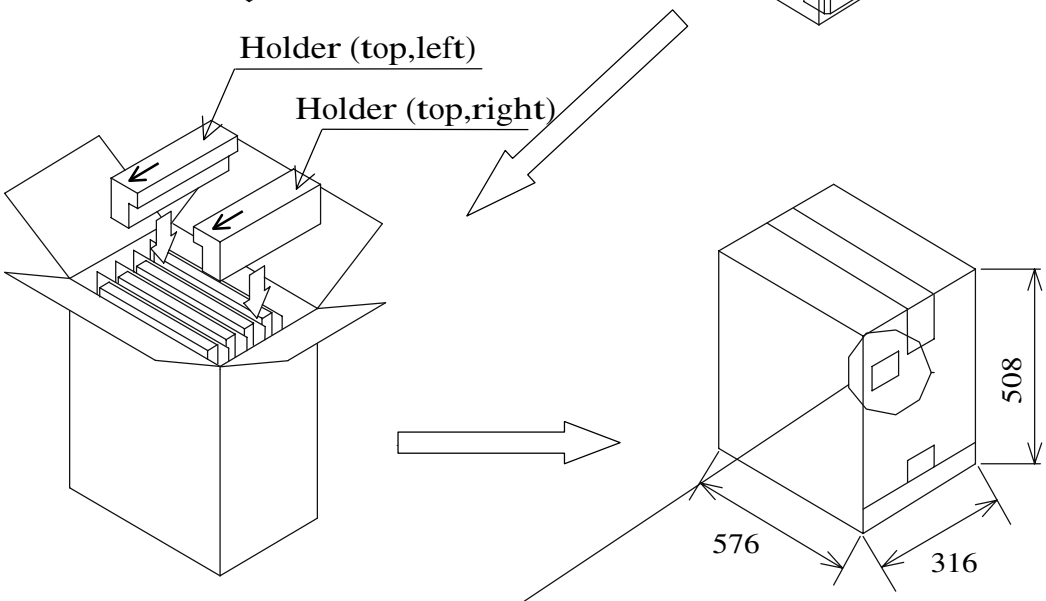

Label (example)

型 格 (TYPE)	FLC51UXC8V-10	数 量 (QTY.)	4
図 番 (DRWG. NO.)	NA19025-C451	版 数 (REV. NO.)	01A
Bar code	2900001	Bar code	
	2900002		
	2900003		
	2900004		
	2900005		
	Bar code		
		MADE IN JAPAN	

- Taping
  - Top : H or I method
  - Bottom : H method
- Top and bottom holders should be anti-electrostatic type.

Fig.15-2 (b) Packaging Method

EDIT	DATE	DESIG.	CHECK	APPR.	DESCRIPTION
DESIG.			CHECK		APPR.

TITLE FLC51UXC8V-10

DRAW. NO.

CUST.

FUJITSU DISPLAY TECHNOLOGIES CORPORATION

SHEET 24

DOCUMENT CONTROL SECTION

DATE

TENTATIVE

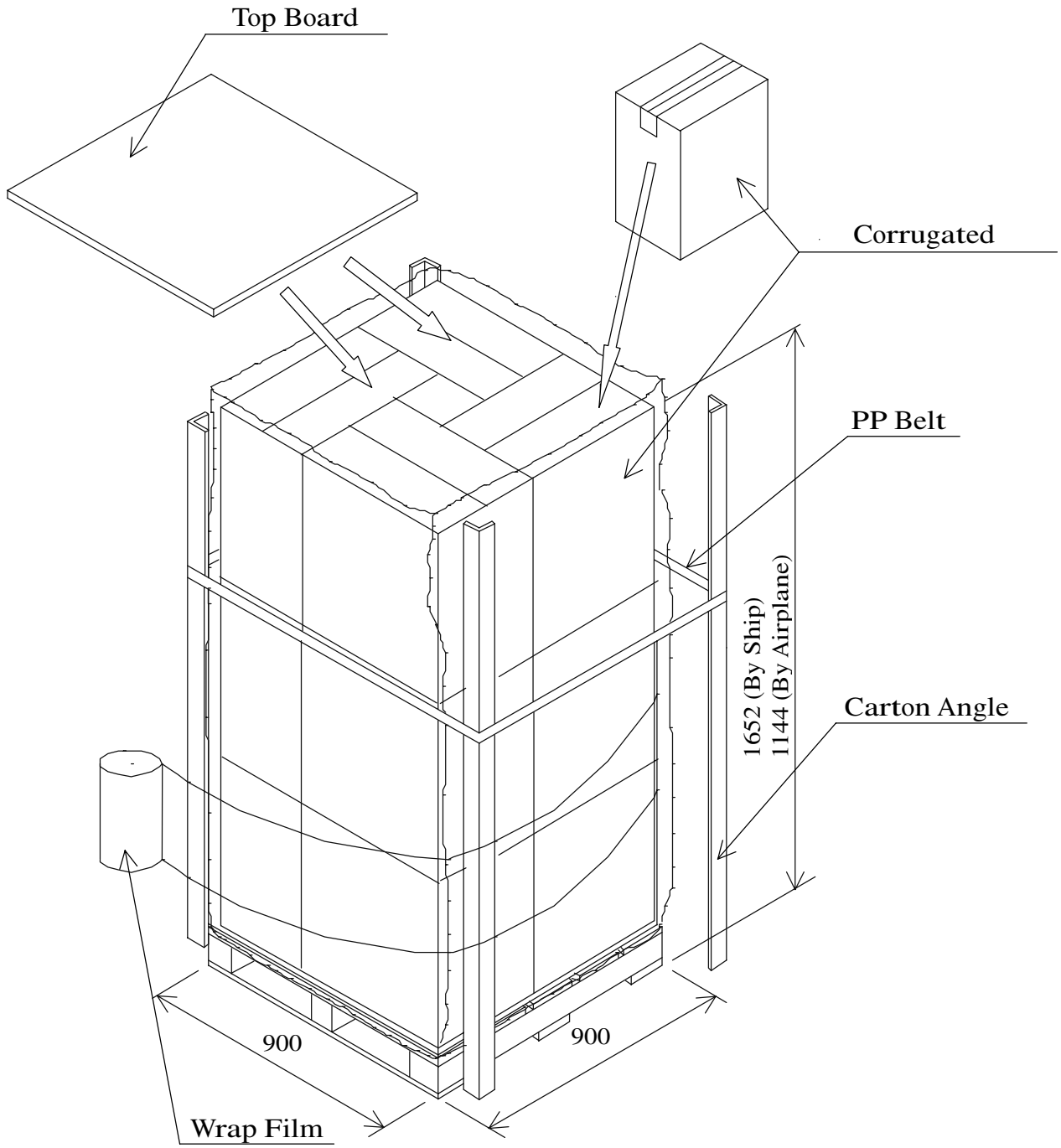

Up and Down : 3 times wrap
Middle : 2 times wrap

Note:1) 4 boxes × 3 layers (maximum 12 boxes) : by ship
4 boxes × 2 layers (maximum 8 boxes) : by airplane
Note:2) This drawing shows marine transportation specification.

Fig.15-2 (c) Packaging Method

DOCUMENT CONTROL SECTION

DATE

EDIT	DATE	DESIG.	CHECK	APPR.	DESCRIPTION
DESIG.			CHECK		APPR.

TITLE FLC51UXC8V-10

DRAW. NO.

CUST.

FUJITSU DISPLAY TECHNOLOGIES CORPORATION

SHEET 25

TENTATIVE

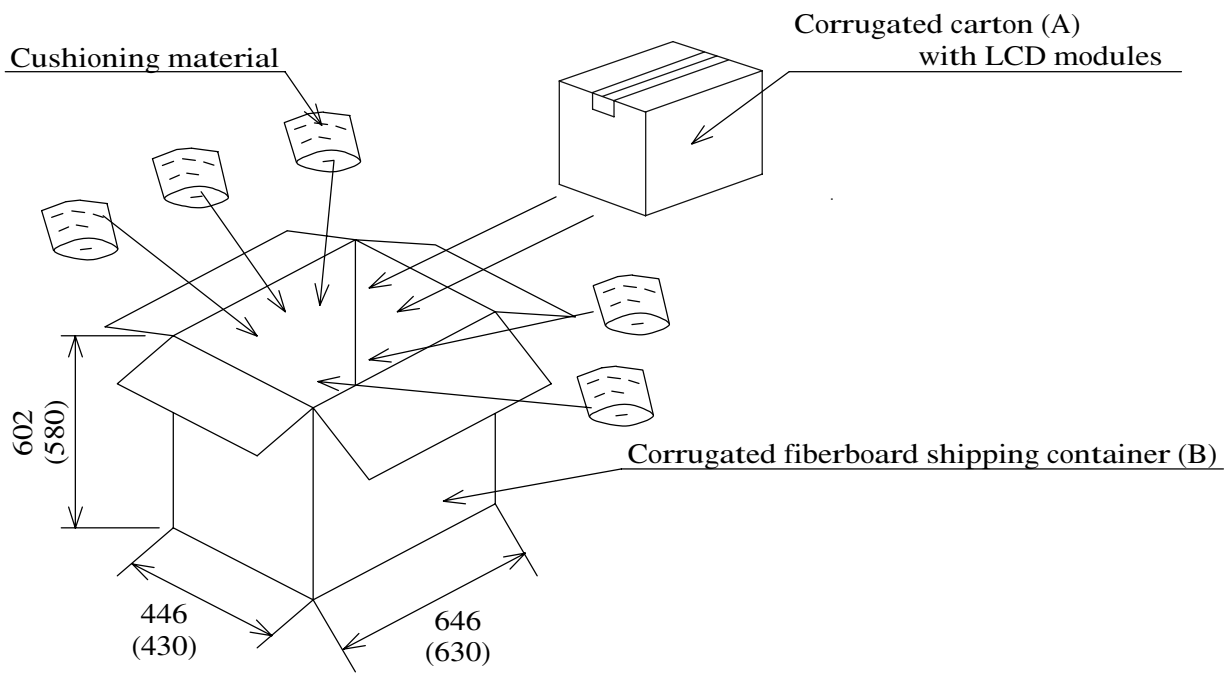

Note 1) The carton (A) should be placed in the middle of the container (B) with enough cushioning materials.

Note2) The figures in ( ) show inside measurements of the container (B).

Figure.15-2 (d) Packing method

DOCUMENT CONTROL SECTION

DATE

EDIT	DATE	DESIG.	CHECK	APPR.	DESCRIPTION
DESIG.			CHECK		APPR.

TITLE FLC51UXC8V-10

DRAW. NO.

CUST.

FUJITSU DISPLAY TECHNOLOGIES CORPORATION

SHEET 26/

TENTATIVE

16.WARRANTY

The warranty period is one year after shipping. Products which fail during this period are repaired or replaced without charge, unless the failure is caused by user.

17.PRECAUTIONS

Adhere to the following precautions to use this LCD module properly.

(1) Handling of LCD panel

① Do not apply any strong mechanical shock to the LCD panel.

Since the LCD panel is made of glass, excessive shock may damage the panel or cause a malfunction.

② Do not press hard on the LCD panel surface.

In the LCD panel, the gap between two glass plates is kept perfectly even to maintain display properties and reliability. The hard pressure on the LCD panel may cause the following problems.

① Ununiformity of color
② Disorder of orientation of liquid crystal

Problem ① returns to normal condition after a while. Problem ② returns to normal condition by turning the power off and turning on again.
However these operations should be avoided to insure reliability.

③ Do not scratch the polarizer film on the LCD panel surface.

・Do not press or rub the display surface with a hard tool, tweezers, etc.
・For handling, use cotton or conductive gloves so that the display surface is not soiled.
・If dust or dirt soils the display surface, clean it as follows with a soft cloth (deerskin, etc.)

[Dust] Wipe off with a soft cloth. (do not rub.)

[Dirt] Apply clear water to a soft cloth and squeeze hard out of water drops, then lightly wipe off the specified parts. Only if the dirt is hardly wiped off, use isopropyl alcohol or ethanol.
Be careful not to splash the water or the solvents on the edge of polarizer and in the LCD unit.
The polarizer possibly exfoliates due to the solvent and water penetrated between the polarizer and the LCD panel.
Do not use unspecified solvent such as ketone (acetone, etc.) and aromatics (xylene, toluene, etc.)

(Caution) Be careful not to allow the water or solvent to enter the module.
・If saliva or water drops are left for a long period of time, the part may become deformed or discolored.
Wipe off immediately in the same way as for dirt.
・Do not allow oil to adhere to the module since excessive oil is hard to clean.

④ **Do not place or contact objects on the display surface for a long period of time.**
This may make some parts of the LCD module distorted and the quality of display may deteriorate.

(2) Handling of LCD module

① **Do not pull the cold-cathode tube cable strongly.**
If the cable is pulled with the strength of 2kg or more, the cable may be damaged or may lose reliability.

② **Assemble the module into user's system in a dust free environment.**
Conductive foreign matter adheres to the module may cause failures.

③ **Take anti-electrostatic measures for assembling the module.**
Since the LCD module contains CMOS-ICs, the following points should be observed.

- For assembling the module, operator should be grounded and wear cotton or conductive gloves.
- Floor of work area and work table to assemble the LCD module should be covered with electrostatic shielding in order to discharge static electricity via an earth wire.
- If necessary, ground operation tools (soldering iron, radio pliers, tweezers, etc.).
- Do not take the module out of the conductive bag until the module is assembled.
- Do not assemble the module under low humidity (50%RH or less).

④ **Do not pull the connecting cable on the rear face of the LCD module strongly.**

⑤ **Do not disassemble or remodel the LCD module.**
Disassembly or remodeling of the LCD module may result in malfunctions or deterioration of the display quality and reliability.

(3) Precautions in regards of operating the LCD module

① **Adhere to the specified power supply sequence.**
If not followed, the CMOS-IC may cause a latch-up, or DC voltage may be applied to the liquid crystal, which cause a failure or serious deterioration in display quality.

② **Do not operate the LCD module when condensation occurs.**
If the LCD module is operated when condensation is on the terminals of the LCD panel, the terminals cause electrochemical reaction, and may reach disconnection. Condensation easily occurs especially when the module is moved from cold environment to warm environment.

③ **The following troubles occur when the LCD module is not used under recommended temperature.**

・Operation under high temperature(>50℃): Display colors shift to blue.

・Storage under high temperature(>60℃): The polarizer film deteriorates and contrast decreases.

・Operation under low temperature(< 0℃): The response speed decreases considerably.

・Storage under low temperature(<-20℃): The liquid crystal may solidify and become damaged.

④ **Be sure to input the control signals at the correct timing.**
If control signals (DCLK, ENAB) are not input, or if the timing is out of the specified timing, DC voltage may be applied to the liquid crystal and, as a result, cause image sticking or deterioration of contrast.

(4) Precautions in regards of designing module mounting

① **Excessive force should not be applied to the screen or the rear side of the LCD module.**
Excessive pressure on the screen caused by the installation of the LCD module may deteriorate display quality and reliability.
Brightness uniformity and the reliability of CCFL may decrease if the pressure is applied to the backlight module.

② **Avoid twisting and bending the LCD module.**
Excessive twist and bend may damage display quality and reliability.

③ **Avoid extending the power cable between the LCD module and inverter.**
This may cause the backlight to flicker or not to light.

④ **Keep the backlight cable apart from the metal enclosure of the LCD module.**
When frequency current for backlight driving leak to the metal enclosure, the desired brightness may not be assured.

⑤ **When Mounting LCD module with M4 screws (x4), tighten the screws with torque below 5kgf.**

(5) Storage method

① **Do not store the LCD module in an atmosphere of organic solvent or corrosive gas.**
In an organic solvent atmosphere, the polarizer film discolors and display quality deteriorates.
In a corrosive gas environment, various parts of the module may corrode or deteriorate.

② **Store the LCD module in a Fujitsu package.**
At storing, Fujitsu packages can be stacked up to 3 boxes.
The LCD module is in an anti-static bag. Keep the module in that status.

③ **The LCD module is recommended to be stored in humidity controlled, cool and dark locations.**

Recommended storage environment

- ・Place : Dark (avoid direct sunlight)
- ・Temperature : 10～35℃
- ・Humidity : 50～60%RH

Note) If the module is left in an environment of 60℃ and above for a long period of time, optical characteristics may deteriorate.

(6) Disposal Method

① **LCD module**

The components of this LCD module can be grouped into metal, resin, glass and so on. As the backlight contains CCFL which includes mercury, it must be disposed according to the local ordinance or regulations.

② **Package**

All the packages are made of recyclable papers except the anti-ESD bag.

(7) Others

① **If the LCD panel is damaged, do not inhale and do not swallow the liquid crystal.**

If the liquid crystal adhere to the body or cloths, wash it off with soap immediately.
Follow regular precautions for electronic components.

② **Flux residue on the printed circuit board is harmless to the quality and reliability of LCD module.**

Fujitsu has adopted non-wash technology on module assembly process.

TENTATIVE

(8) Return method of the LCD unit requested for repair or analysis of the problem

・When the LCD unit is packaged and returned, adhere to the following procedures not to damage the LCD panel or the backlight cables. (Fig. 18-1(a)~(b))
When the LCD unit is returned without following the specified packaging procedures, FDTC will not take responsibility for the damages caused by the failure of the packaging method.

①Attach protective sheet.

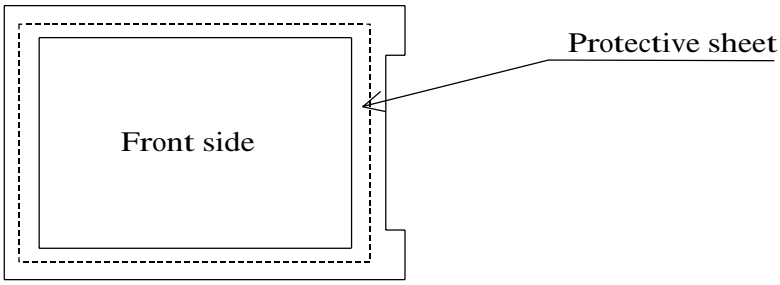

②Put the LCD unit into the anti-electric bag

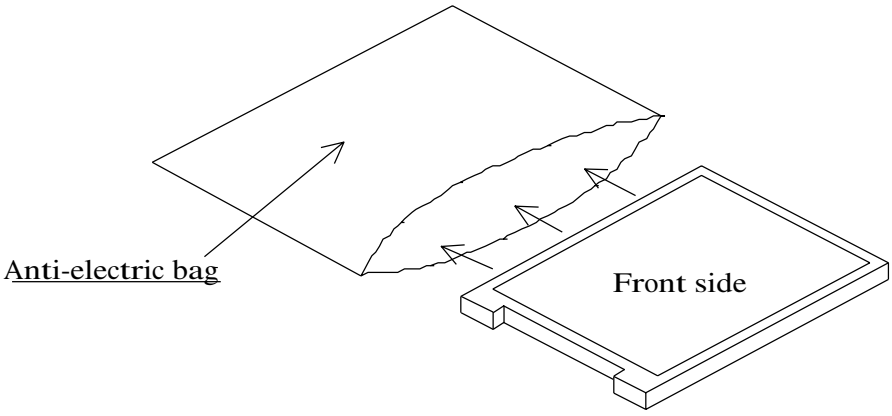

Fig. 17-1(a) Packaging method

TENTATIVE

③ **Storage into the container box**

・When using the container box manufactured by FDTC

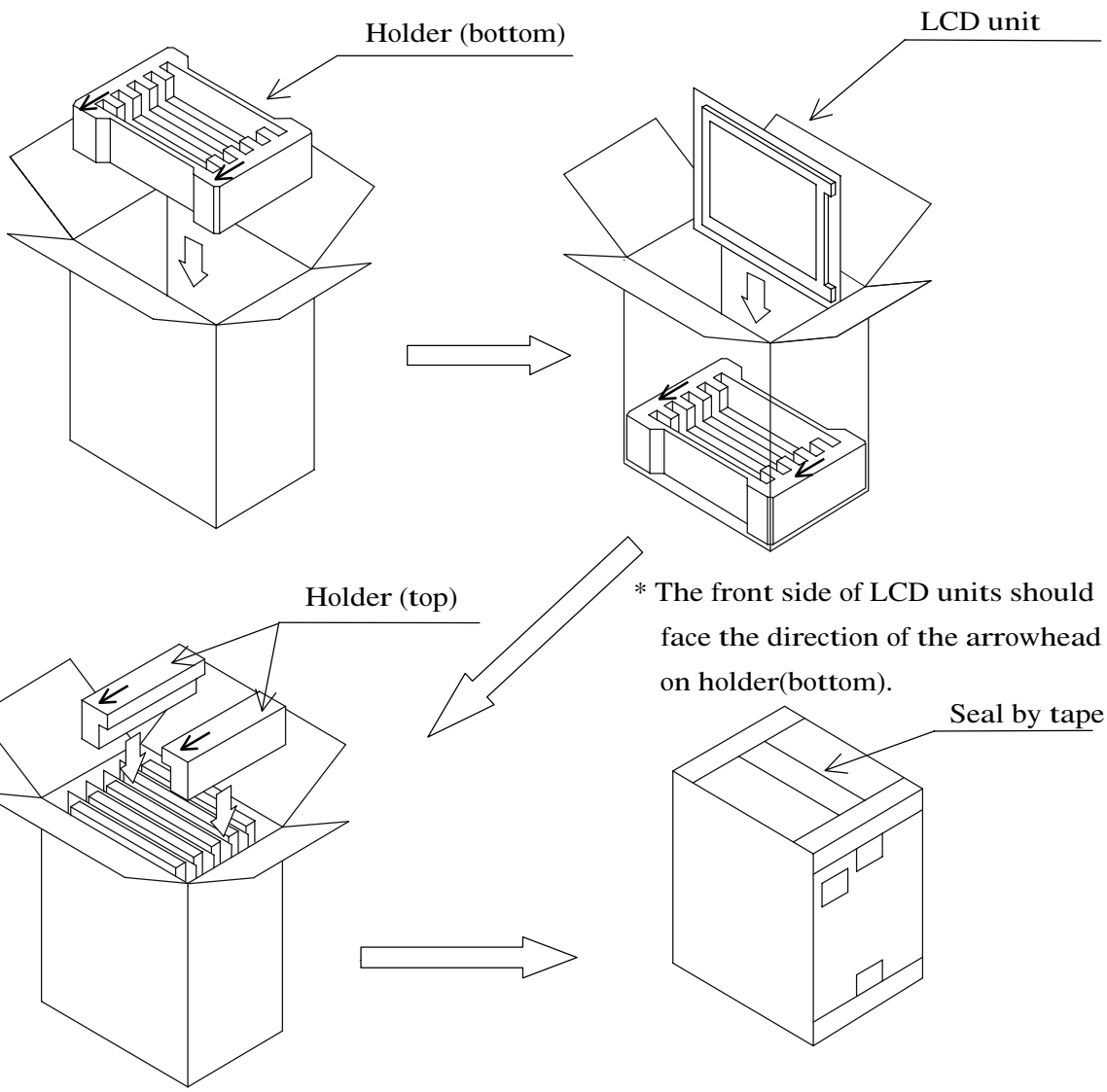

* The front side of LCD units should face the direction of the arrowhead on holder(bottom).

* The direction of the arrowhead on holder (top) should face the front side of the LCD units.

The arrowheads are shown on the holders.

Fig. 17-1(b) Packaging method

・When not using the container box manufactured by FDTC

Please pack the LCD units one by one and make sure not to damage the LCD unit when transporting.

TENTATIVE

18.OTHERS

Specifications of the TFT-LCD panel and other components used in this LCD module are subject to change.

Both parties shall discuss together and make the best effort to reach agreement in case of the rising of any doubt to the contents of the specifications.

This LCD module is not designed for the purpose where high reliability is required, such as for aero-space equipment, control system of nuclear power and medical life-support equipment.

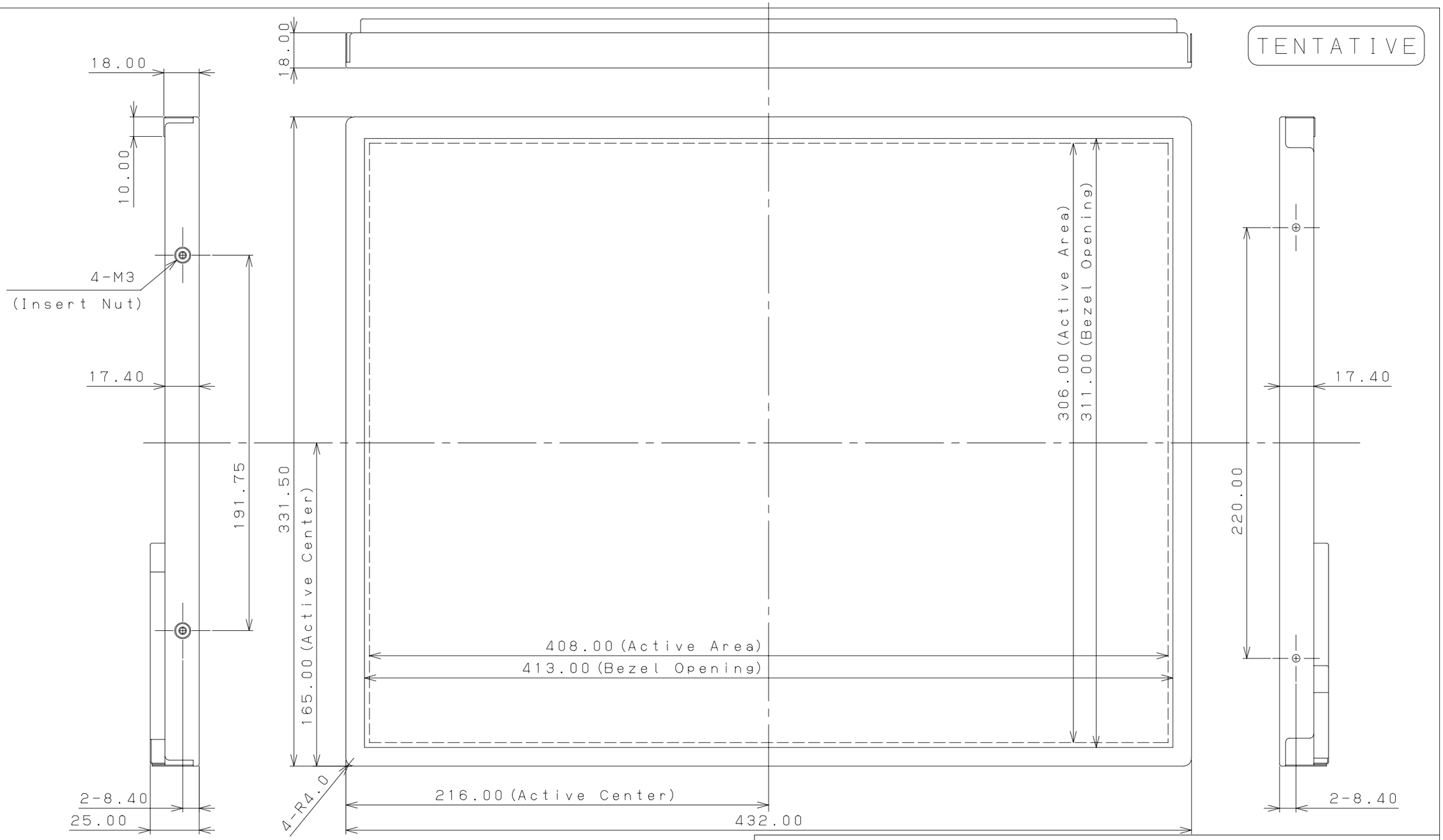

MATER.

FINISH

EDIT.	DATE	DESIG.	CHECK	DESCRIPTION				
DESIG.	·	·	CHECK			APPR.		

TITLE FLC51UXC8V-10

SCALE 1 : 2

DRAW. NO.

SHEET 34/

TENTATIVE

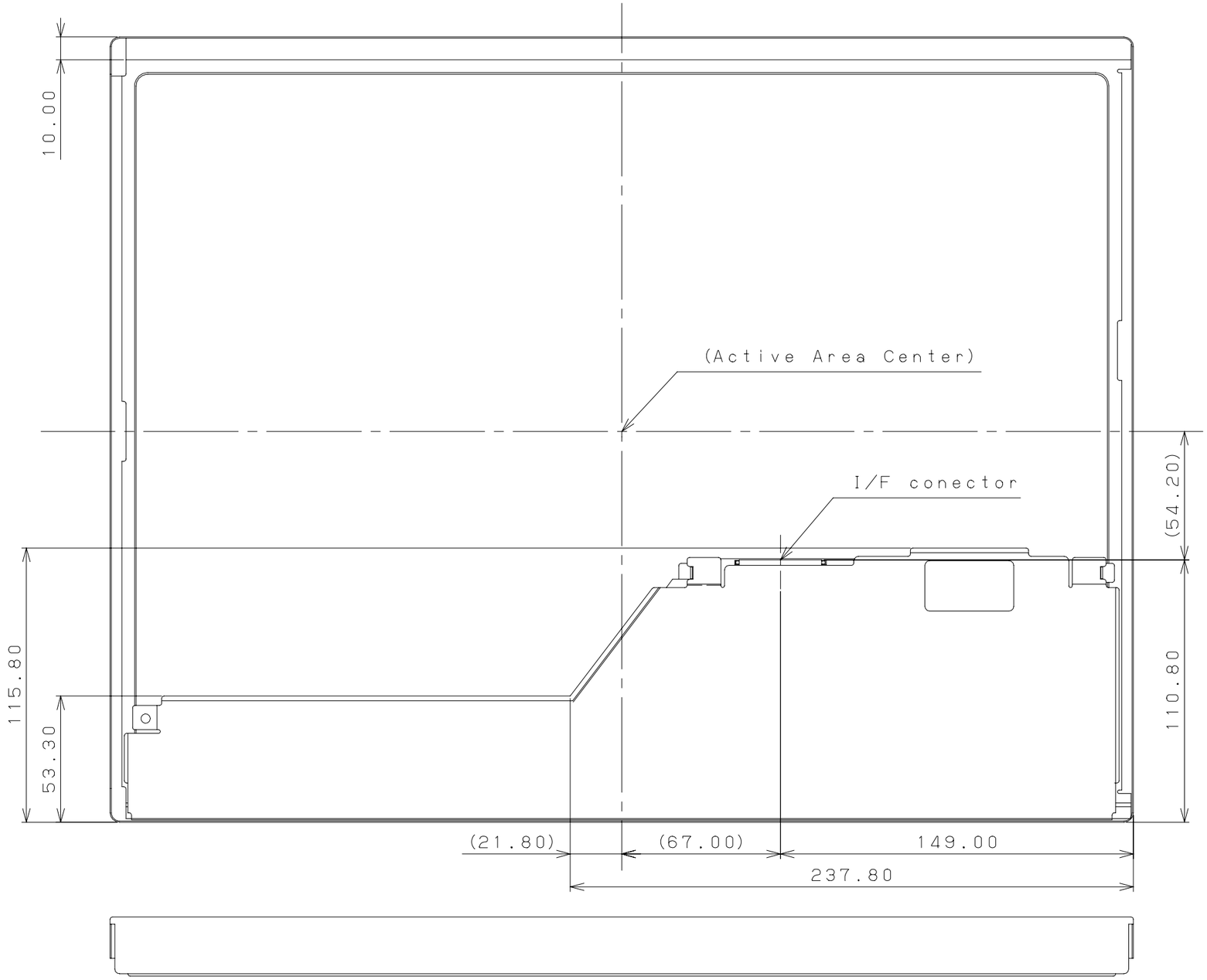

MATER.				FINISH								
								TITLE FLC51UXC8V-10			SCALE 1 : 2	
								DRAW. NO.				
EDIT.	DATE	DESIG.	CHECK	DESCRIPTION							SHEET	35/35
DESIG.			CHECK			APPR.						