HITACHI

KAOHSIUNG HITACHI
ELECTRONICS CO.,LTD
P.O. BOX 26-27
2,13TH EAST ST. K.E.P.Z.
KAOHSIUNG TAIWAN R.O.C.
TEL:(07) 821-5811 (7 LINE)
FAX:(07) 821-5815

FOR MESSRS. _____ DATE. Sep.05,2008

CUSTOMER'S ACCEPTANCE SPECIFICATIONS

SP14Q011-T1A

CONTENTS

* When products will be discontinued, customers will be informed by HITACHI with twelve months prior announcement.

ACCEPTED BY; _____ PROPOSED BY; Dan Chang

RECORD OF REVISION

DATE	SHEET No.	SUMMARY
Sep.05,'08	7B64PS 2705 – SP14Q011-T1A-2 Page 5-1/2	5.1 ELECTRICAL CHARACTERISTICS Changed

I T E M	SYMBOL	MIN.	TYP.	MAX.
Power Supply Voltage for Logic	VDD	3.0	5.0	5.25
Frame Frequency Note4	fFLM	70	75	-

↓

I T E M	SYMBOL	MIN.	TYP.	MAX.
Power Supply Voltage for Logic	VDD	4.85	5.0	5.15
Frame Frequency Note4	fFLM	70	75	80

3. GENERAL SPECIFICATIONS

(1)	Part Name	SP14Q011-T1A
(2)	Outer Dimensions	131.0(W)mm×102.2(H)mm×12.4(D)mm(typ.)
(3)	LCD Active Area	115.2(W)mm × 86.4(H)mm
(4)	Dot Size	0.345(W)mm × 0.345(H)mm
(5)	Dot Pitch	0.36(W)mm × 0.36(H)mm
(6)	Dot Number (Resolution)	320 (W) × 240 (H) dots
(7)	Duty Ratio	1/241
(8)	LCD Type	Transflective type F-STN Positive type
(9)	Viewing Direction	6 O'clock
(10)	Viewing Angle	Wide Viewing Angle
(11)	BackLight Type	White LED Life time : 40khrs @25℃ Note : Life time for half of initial brightness
(12)	Touch Panel	Resistance type The surface is antiglare type

4. ABSOLUTE MAXIMUM RATINGS

4.1 ELECTRICAL ABSOLUTE MAXIMUM RATINGS

VSS=0V : STANDARD

ITEM	SYMBOL	MIN.	MAX.	UNIT	COMMENT
Power Supply for Logic	VDD-VSS	-0.3	7.0	V	
Power Supply for LC Driving	Vcon-VSS	-0.3	3	V	
Input Signal Voltage	Vi	-0.3	VDD+0.3	V	Note 1
Input Signal Current	Ii	0	0.6	A	
Static Electricity	VESD0	-	±100	V	Note 2,3,4
	VESD1	-	±10	kV	Note 2,3,5

Note 1 : $\overline{\text{DOFF}}$, FLM , CL1 , CL2 , D0~D3.
Note 2 : Make certain you are grounded when handling LCM.
Note 3 : Energy storage capacitance 200pF , discharge resistance 250Ω Ta=25℃ , 60%RH.
Note 4 : Contact discharge to I/F connector pins.
Note 5 : Contact discharge to front metal bezel.

4.2 ENVIRONMENTAL ABSOLUTE MAXIMUM RATINGS

ITEM	OPERATING		STORAGE		COMMENT
	MIN.	MAX.	MIN.	MAX.	
Ambient Temperature	-20℃	70℃	-30℃	80℃	Note 2,3
Humidity	Note 1		Note 1		Without Condensation
Vibration	-	2.45m/s^2 (0.25G)	-	11.76m/s^2 (1.2G) Note 5	Note 4 1h max.
Shock	-	29.4m/s^2 (3 G)	-	490.0m/s^2 (50 G) Note 5	X、Y、Z Directions
Corrosive Gas	Not Acceptable		Not Acceptable		

Note 1 Ta≦40℃ : 85%RH max.
Ta>40℃ : Absolute humidity must be lower than the humidity of 85%RH at 40℃
Note 2 Ta at -30℃ < 48h , at 80℃ < 168h.
Note 3 Background color changes slightly depending on ambient temperature.
This phenomenon is reversible.
Note 4 5Hz~100Hz (Except resonance frequency)
Note 5 This module should be operated normally after finish the test.
Note 6 The operating temperature only guarantee the display can be operated regarding the contrast , response time , brightness and other features related to the quality are judged by Ta = 25℃ condition.

5. ELECTRICAL CHARACTERISTICS

5.1 ELECTRICAL CHARACTERISTICS

I T E M	SYMBOL	CONDITION	MIN.	TYP.	MAX.	UNIT
Power Supply Voltage for Logic	VDD	-	4.85	5.0	5.15	V
Input Signal Voltage Note 1	Vi	H LEVEL	0.8VDD	-	VDD	V
		L LEVEL	0	-	0.2VDD	V
Power Supply Current for Logic Note 2	IDD	VDD = 5.0V Vcon = 2.0V	-	(30)	-	mA
Power Supply Current for LC Driving Note 2	Icon	VDD = 5.0V Vcon= 2.0V	-	(0.4)	-	mA
Recommended LC Driving Voltage Note 2. 3	Vcon	VDD =5.0V Ta= 0℃ , ϕ= 0°	-	2.0	-	V
		VDD =5.0V Ta=25℃ , ϕ= 0°	-	2.0	-	V
		VDD =5.0V Ta=50℃ , ϕ= 0°	-	2.0	-	V
FRAME Frequency Note 4	fFLM	-	70	75	80	Hz

Note 1 : $\overline{\text{DOFF}}$, FLM , CL1 , CL2 , D0~D3

Note 2 : fFLM=(75)Hz , test pattern is all "Q".

Note 3 : Recommended LC driving voltage may fluctuate about ±1.0V by each module. Test pattern is all "Q"

Note 4 : Please set the frame frequency so as to avoid flicker and rippling on the display.

5.2 ELECTRICAL CHARACTERISTICS OF BACKLIGHT.

Ta=25℃ (Backlight On)

ITEM	SYMBOL	CONDITION	MIN.	TYP.	MAX.	UNIT
Power Supply Voltage for LED	VLED	-	-	5.0	-	V
Power Supply Current for LED	ILED	VLED=5.0	-	160	200	mA

NOTE 1 : The ILED changes depending on ambient temperature.

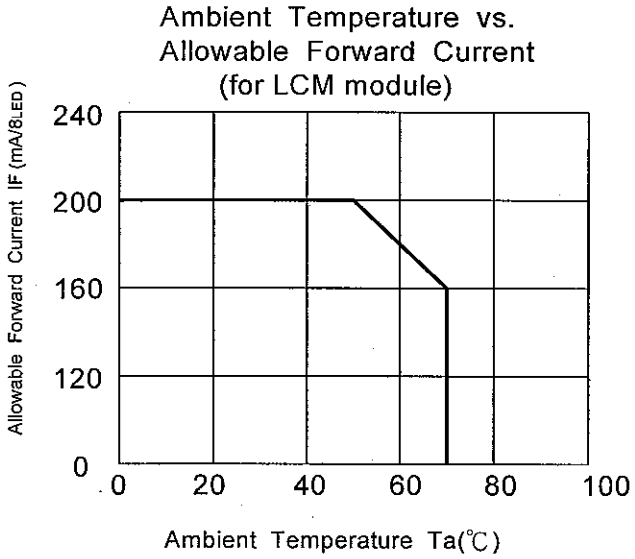

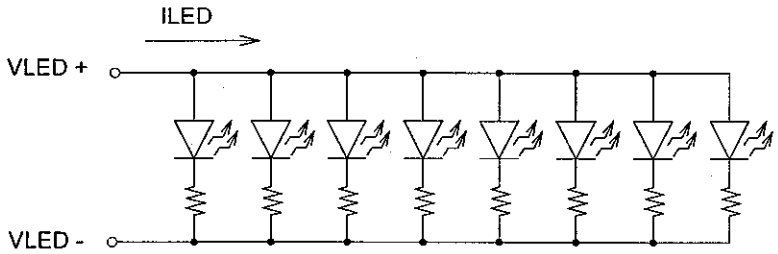

5.3 ELECTRICAL CHARACTERISTICS OF TOUCH PANEL

5.3.1 OPERATING CONDITION

ITEM	SPECIFICATION	NOTE
Operating Voltage	5VDC	7VDC max.
Operating Current	20mA max.	

5.3.2 ELECTRICAL CHARACTERISTICS

ITEM		SPECIFICATION	NOTE
Resistance Between Terminal	XT-XB	210~880Ω	
	YR-YL	230~650Ω	
Insulation Resistance	X-Y	20MΩmin.	At 25V DC
Linearity	X	±1.5% max.	(Note 1)
	Y	±1.5% max.	
Chattering		10ms max.	

5.3.3 MECHANICAL CHARACTERISTICS

ITEM	SPECIFICATION	NOTE
Pen Input Pressure	0.2 ~ 1.2N	R0.8, Polyacetal Pen
Finger	0.2 ~ 1.2N	R8.0, Silicon Rubber
Surface Hardness	3H min.	JIS K 5400

5.3.4 OPTICAL CHARASTERISTICS

ITEM	SPECIFICATION	NOTE
Transmittance	80% min.	

Note 1 : Operating Voltage 5V DC.
Note 2 : Test Condition.
(a) X axis linearity testing method , 100g , VYR-VYL=5V , VOUT=VXT.

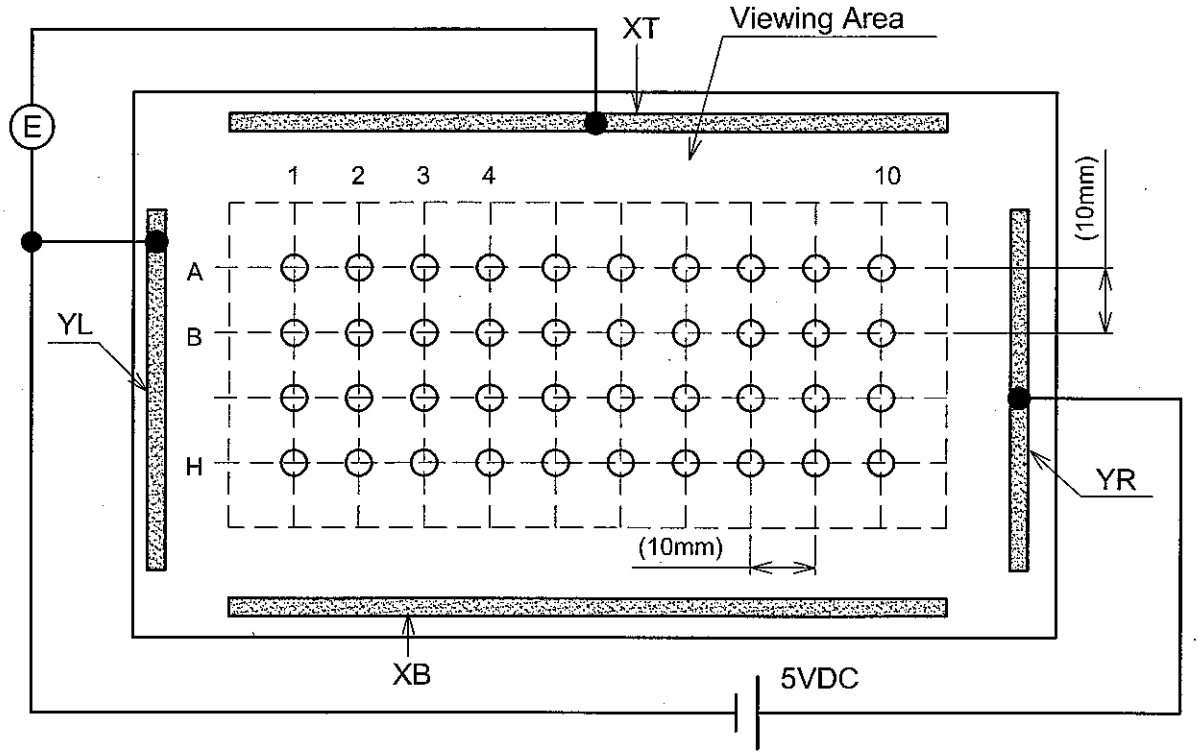

(b) Y axis linearity testing method , VXT-VXB=5V , VOUT=VYR.

Note 3 : Calculation
(a) Y axis linearity

$$\text{Linearity}=\frac{\triangle E\ max.}{EA\ -\ EH}\times 100(\%)$$

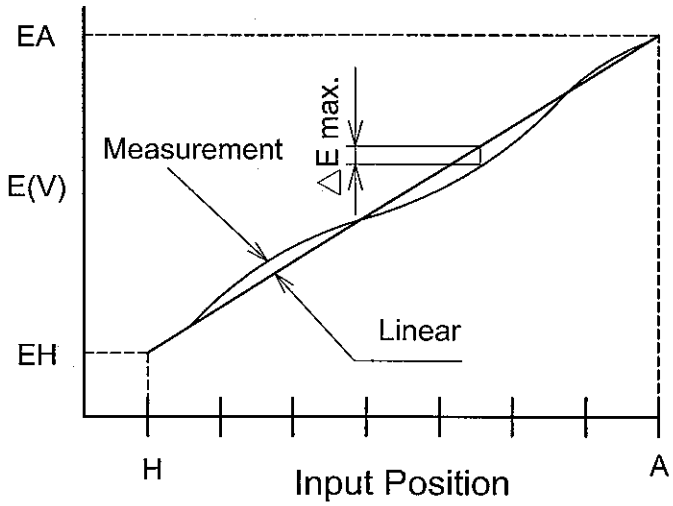

6. OPTICAL CHARACTERISTICS

6.1 OPTICAL CHARACTERISTICS OF LCD

Ta=25℃(Backlight On)

ITEM	SYMBOL	CONDITION	MIN.	TYP.	MAX.	UNIT	NOTE
Viewing Area	$\phi F - \phi RR$	$K \geqq 2.0$	-	90	-	deg	1,2
	$\phi L - \phi RT$			80			
Contrast Ratio	K	$\phi=0^\circ$, $\theta=0^\circ$	3	5	-	-	3
Response Time (Rise)	tr	$\phi=0^\circ$, $\theta=0^\circ$	-	(150)	-	ms	4
Response Time (Fall)	tf	$\phi=0^\circ$, $\theta=0^\circ$	-	(330)	-	ms	4

(Measurement condition : HITACHI standard)
Note 2~7 : See next page.

Note 1 : Definition of Viewing Angle

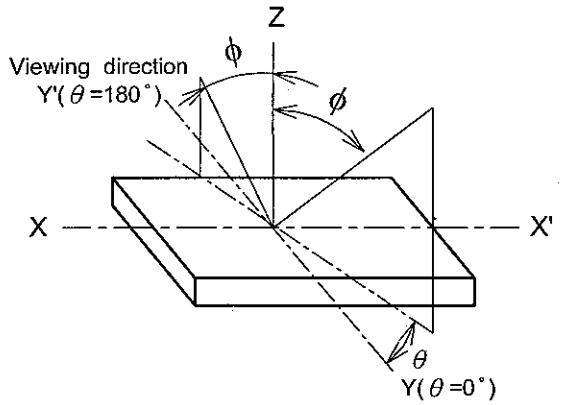

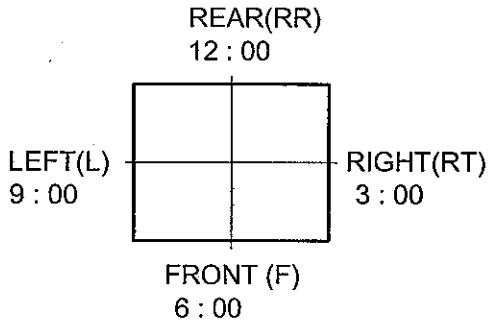

LEFT-RIGHT Direction

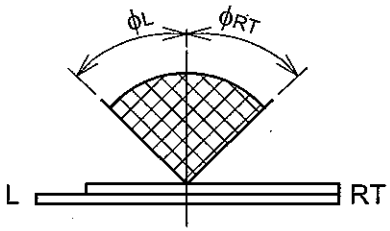

REAR-FRONT Direction

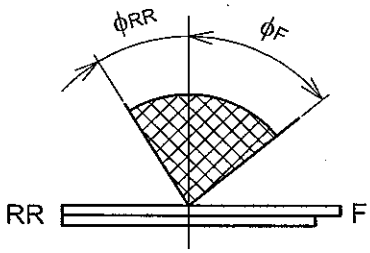

* The viewing direction of this product is 6 O'clock.
  So $f_F > f_{RR}$

Note 2 : Definition of viewing angle
ϕ_{RR} and ϕ_F , ϕ_{RT} and ϕ_L

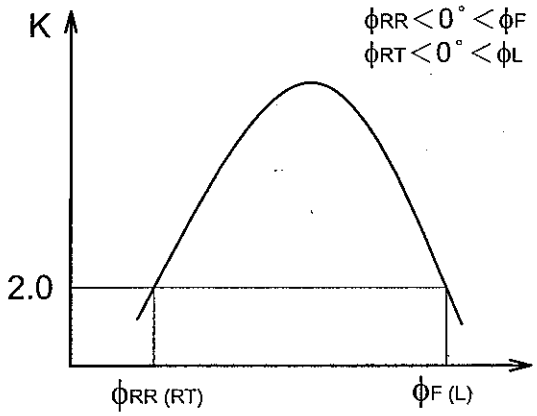

Viewing Angle

Contrast ratio K vs viewing angle ϕ

Note 3 : Definition of contrast "K"

$$K = \frac{\text{Brightness on non-selected area (B2)}}{\text{Brightness on selected area (B1)}}$$

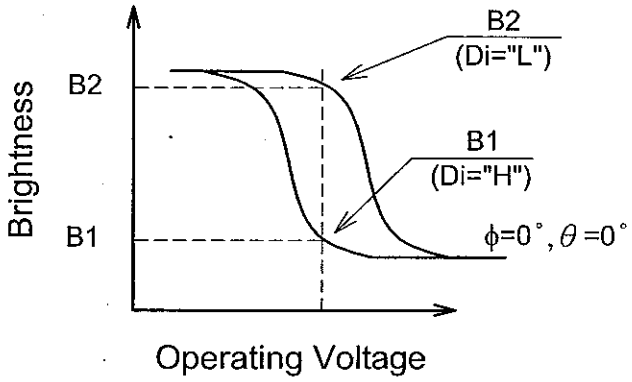

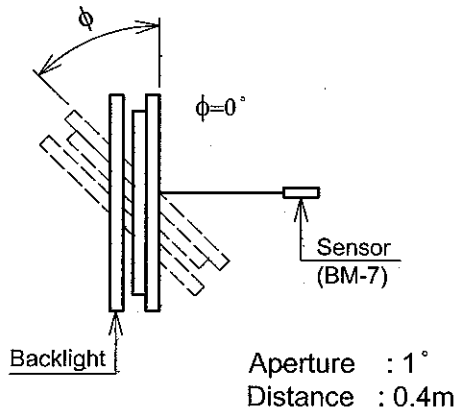

Note 4 : Definition of optical response time

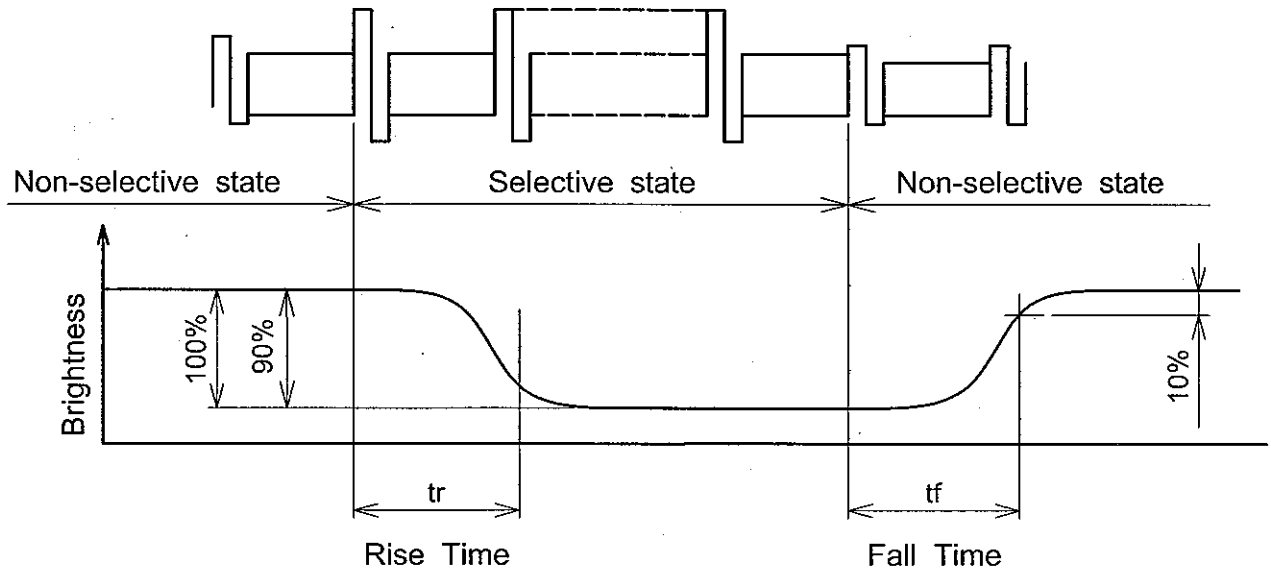

Note 5 : HITACHI will not do 100% inspection for minimum value. Minimum value is for reference.

Note 6 : HITACHI will do sampling inspection for minimum value.

Note 7 : The LCD driving voltage should be adjusted at the voltage where the peak contrast is obtained.

6.2 OPTICAL CHARACTERISTICS OF BACKLIGHT

I T E M	MIN.	TYP.	MAX.	UNIT	NOTE
Brightness	35	45	-	cd/m^2	ILED=160mA Note 1
Brightness Uniformity	-	-	±30	%	-

Note 1 Display data should be all "ON".
The LCD driving voltage should be adjusted at the voltage where the peak contrast is obtained.

Note 2 Measure of the following 9 places on the display.

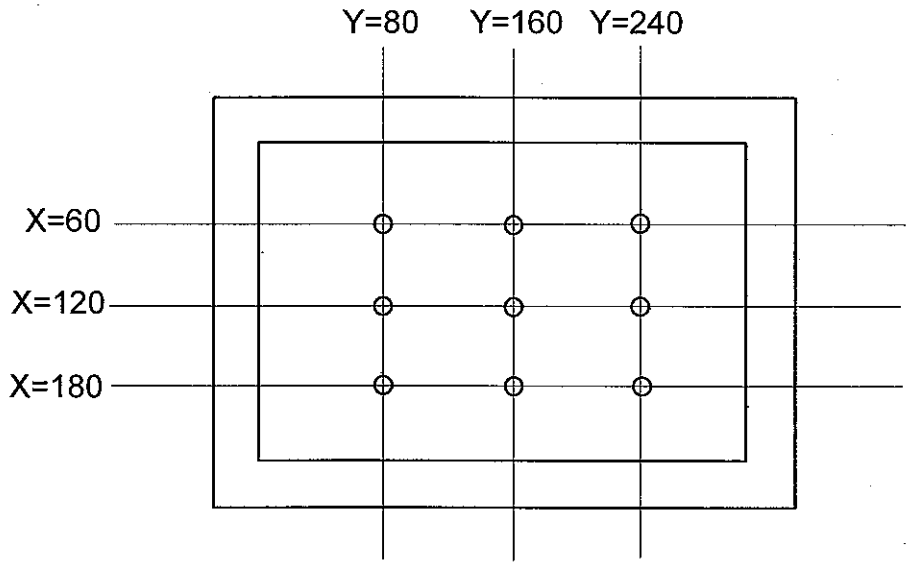

Definition of the brightness tolerance.

$$\left(\frac{\text{max. or min. Brightness - Average Brightness}}{\text{Average Brightness}} \right) \times 100\%$$

7. BLOCK DIAGRAM

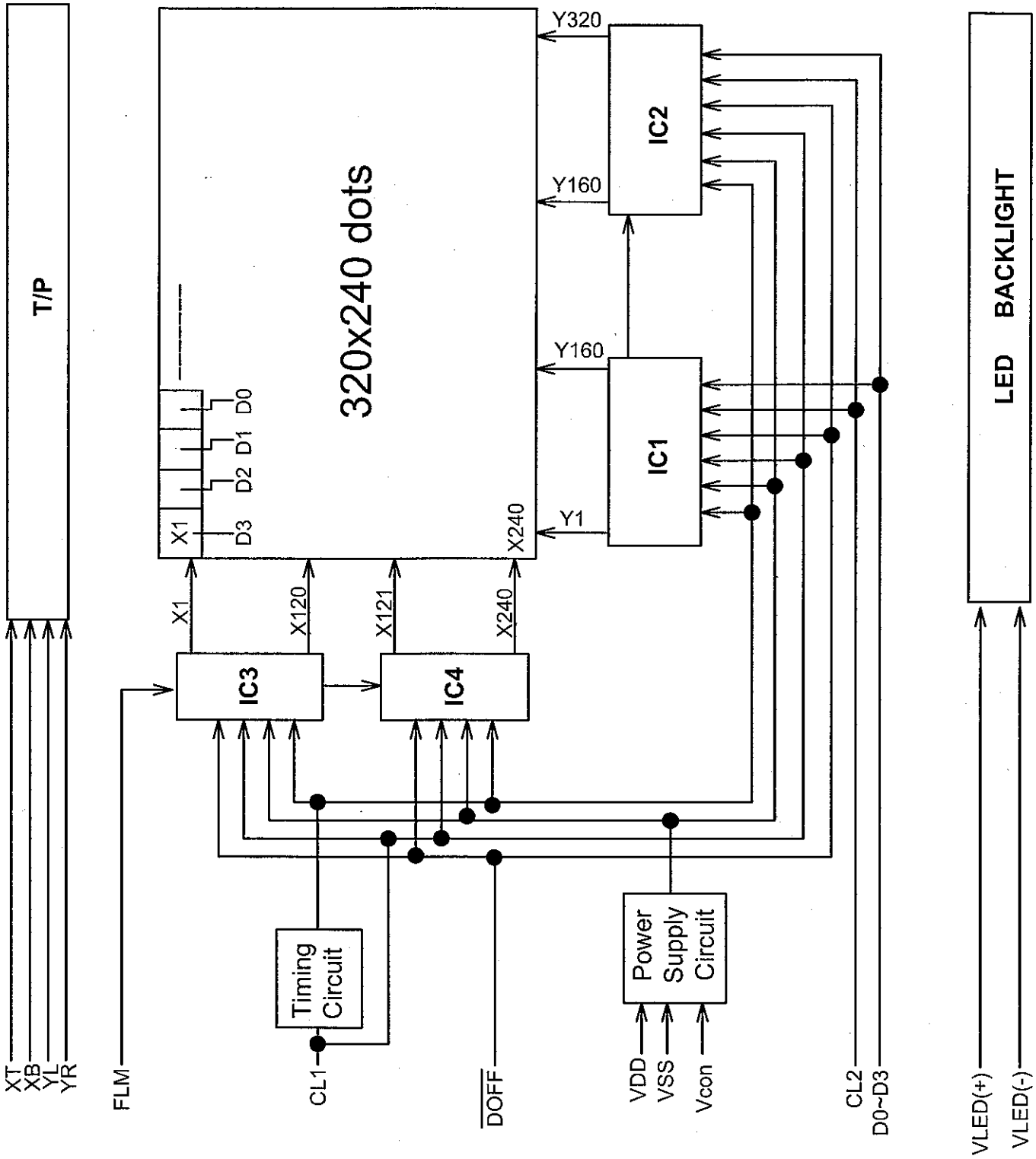

8. INTERFACE TIMING CHART

8.1 INTERFACE TIMING CHART

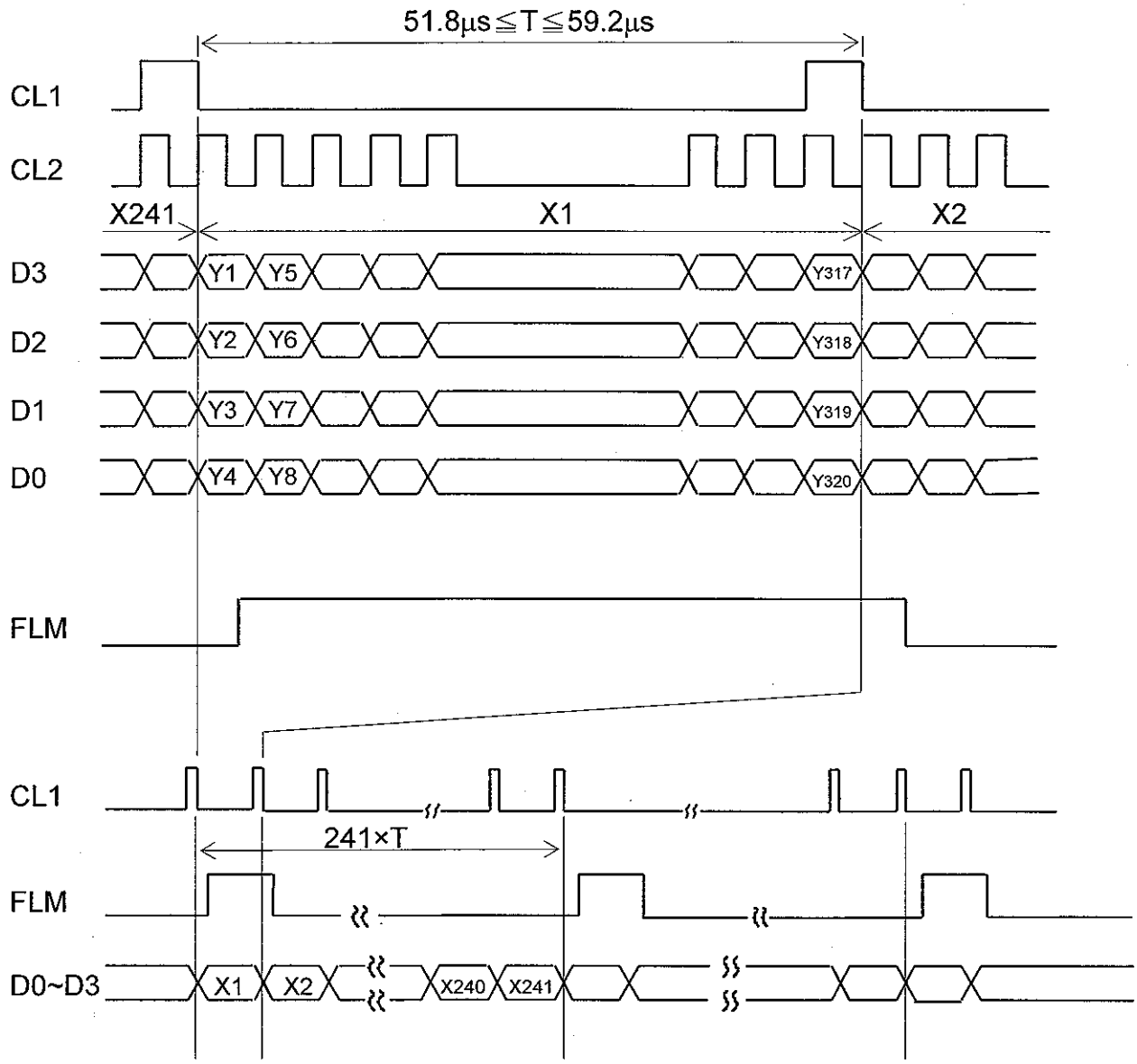

8.2 TIMING CHARACTERISTICS

VDD=5.0±5%

PARAMETER	SYMBOL	MIN.	TYP.	MAX.	UNIT	CONDITION
Shift Clock Period	tWCK	71	-	-	ns	tr , tf≦10ns
Shift Clock "H" Pulss Width	tWCKH	23	-	-	ns	
Shift Clock "L" Pulss Width	tWCKL	23	-	-	ns	
Data Setup Time	tDS	10	-	-	ns	
Data Hole Time	tDH	20	-	-	ns	
Latch Pulse "H" Pulse Width	tWLPH	23	-	-	ns	
Shift Clock Rise to Latch Pulse Rise Time	tLD	0	-	-	ns	
Shift Clock Rise to Latch Pulse Fall Time	tSL	25	-	-	ns	
Latch Pulse Rise to Shift Clock Rise Time	tLS	25	-	-	ns	
Latch Pulse Fall to Shift Clock Fall Time	tLH	25	-	-	ns	
Input Signal Rise Time	tr	-	-	50	ns	(Note 1)
Input Signal Fall Time	tf	-	-	50	ns	(Note 1)
$\overline{\text{DOFF}}$ Removal Time	tSD	100	-	-	ns	
$\overline{\text{DOFF}}$ Enable Pulse Time	tWDL	1.2	-	-	μs	
"FLM" Set Up Time	tFS	30	-	-	ns	-
"FLM" Hold Time	tFH	50	-	-	ns	-

Note 1 : (tWCK - tWCKH - tWCKL) /2 is the maximum in the case of high speed operation.

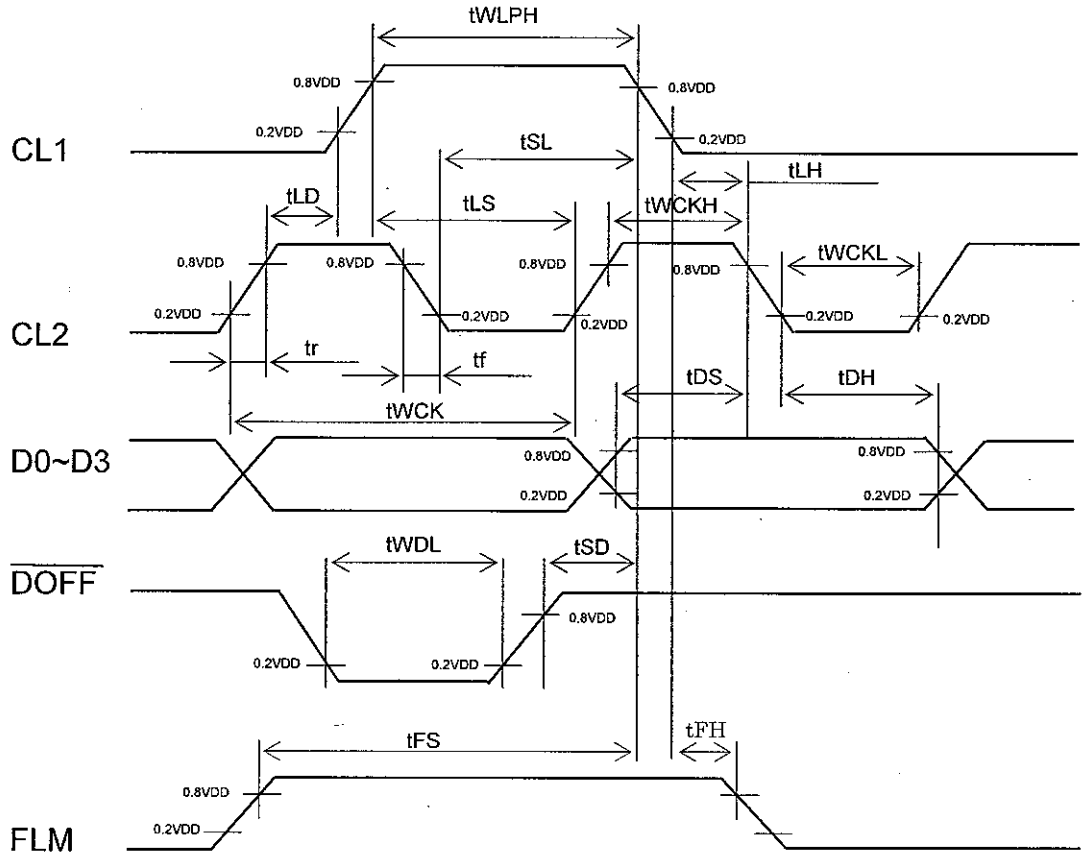

8.3 TIMING OF POWER SUPPLY AND INTERFACE SIGNAL

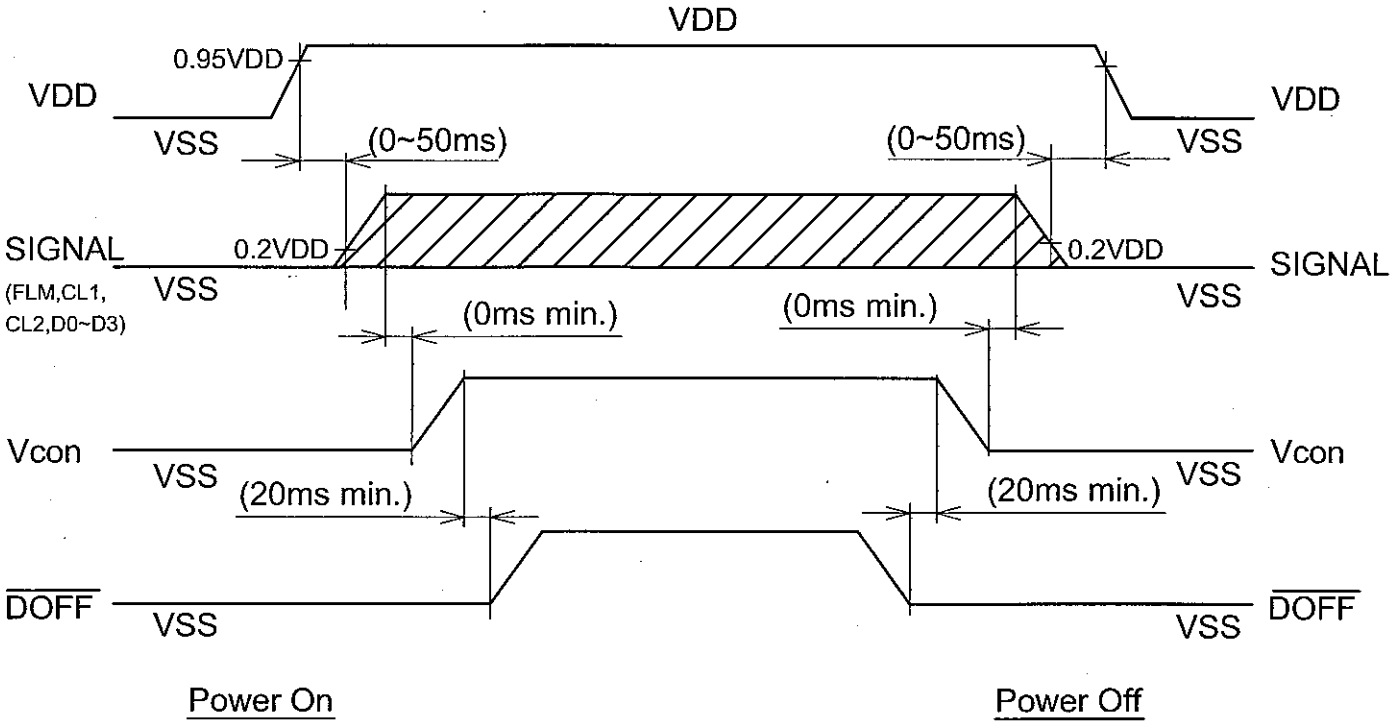

Note 1 : $\overline{\text{DOFF}}$ function takes priority even if the input signal status becomes irregular immediately after VDD power-on.

Note 2 : Please keep the specified sequence because wrong sequence may cause permanent damage to the LCM.

9. DIMENSIONAL OUTLINE

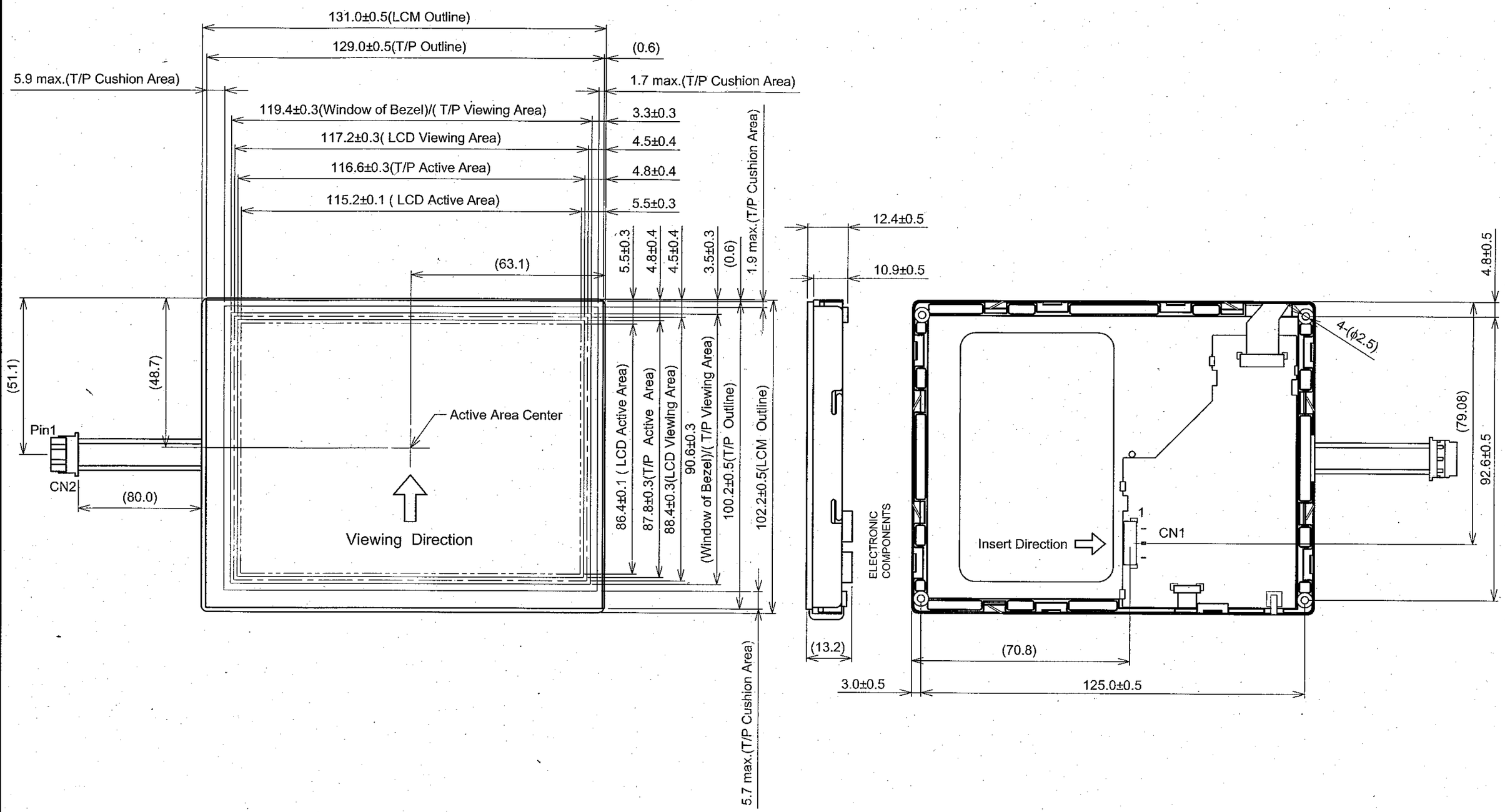

Scale : NTS
Unit : mm

KAOHSIUNG HITACHI ELECTRONICS CO.,LTD.	DATE	Sep.05,'08	Sh. No.	7B63PS 2709-SP14Q011-T1A-2	PAGE	9-1/2

9.2 DISPLAY PATTERN

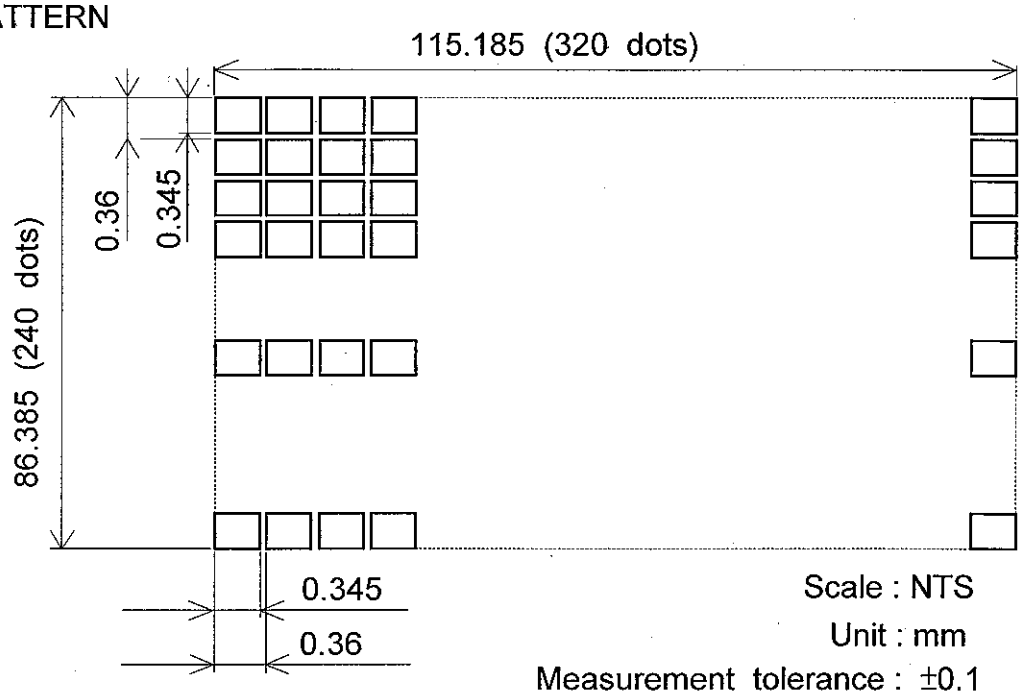

9.3 INTERFACE PIN CONNECTION

CN1 Molex : 52893-2095(Suitable FPC : t0.3±0.05mm,0.5±0.05mm pitch)

INTERFACE		PIN No.	SIGNAL	LEVEL	FUNCTION
LCM	CN1	1	N.C	-	No Connection
		2	N.C	-	
		3	VSS	-	GND
		4	D0	H/L	Display Data
		5	D1		
		6	D2		
		7	D3		
		8	VSS	-	GND
		9	CL2	H→L	Display Data Shift
		10	VSS	-	GND
		11	Vcon	-	Contrast Adjust
		12	VDD	-	Power Supply for Logic
		13	FLM	H	First Line Marker
		14	$\overline{DOFF}$	H/L	H : ON / L : OFF
		15	CL1	H→L	Display Data Latch
		16	VSS	-	GND
		17	XT	-	Analog Signal Form Digitizer Top
		18	YL	-	Analog Signal Form Digitizer Left
		19	XB	-	Analog Signal Form Digitizer Bottom
		20	YR	-	Analog Signal Form Digitizer Right

CN2 JST Housing : BHR-03VS-1

PIN No.	SIGNAL	LEVEL	FUNCTION
1	VLED(+)	-	Power Supply for LED
2	NC	-	No connection
3	VLED(-)	-	GND for LED

10. APPEARANCE STANDARD

10.1 APPEARANCE INSPECTION CONDITION

Visual inspection should be done under the following condition.

(1) The inspection should be done under in the dark room.
(about 1000(lx),500(lx)min. and non-directive)
(2) The distance between eyes of an inspector and the LCD module is 25cm.
(3) The viewing zone is shown the figure .
Viewing angle ≦25°

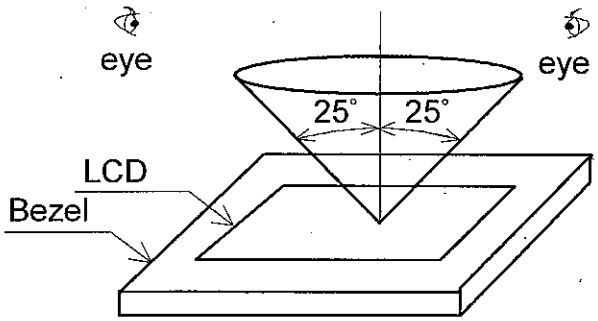

10.2 DEFINITION OF EACH ZONE

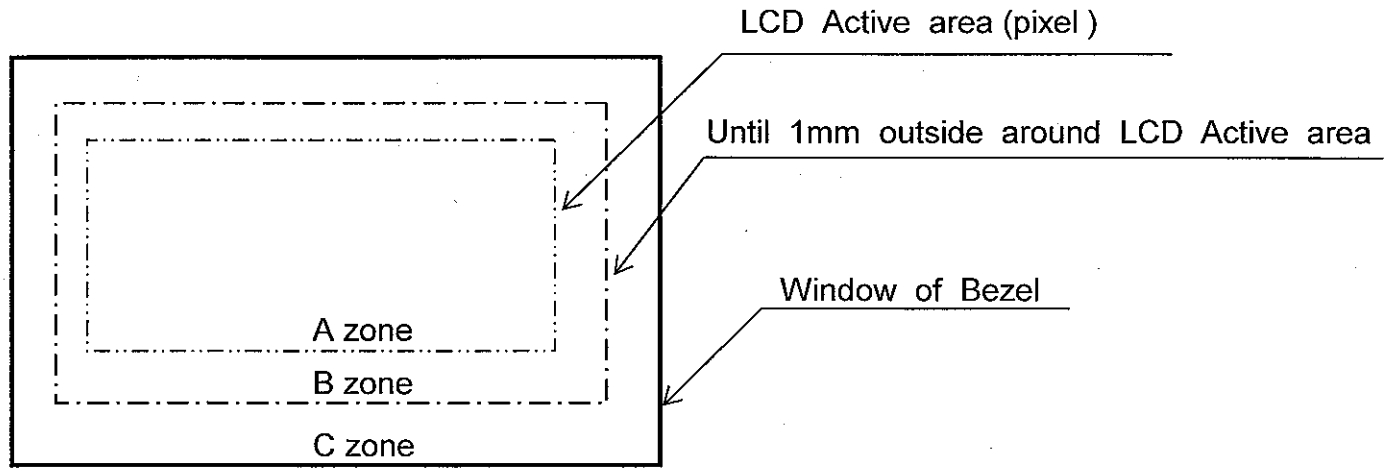

10.3 APPEARANCE SPECIFICATION

*) If a problem occurs in respect to any of these items, both parties(Customer and HITACHI) will discuss in more detail.

No.	ITEM	CRITERIA				A	B
L C D	Scratches	Distinguished one is not acceptable (To be judged by HITACHI limit sample)				*	-
	Dent	Same as above				*	-
	Wrinkles in Polarizer	Same as above				*	-
	Bubbles	Average diameter D(mm)		Maximum number acceptable		○	-
		D≦0.2		Ignore			
		0.2<D≦0.3		12			
		0.3<D≦0.5		3			
		0.5<D		None			
	Stains, Foreign Materials, Dark Spot	Filamentous				○	-
		Length L(mm)	Width W(mm)	Maximum number acceptable			
		L≦2.0	W≦0.03	Ignore			
		L≦3.0	0.03<W≦0.05	6			
		L≦2.5	0.05<W≦0.1	1			
		Round				○	-
		Average diameter D(mm)	Maximum number acceptable	Minimum space			
		D<0.2	Ignore	-			
		0.2 ≦D<0.33	8	10mm			
		0.33≦D	None	-			
		Total	Filamentous + Round = 10				
		Those wiped out easily are acceptable				○	○
	Color Tone	To be judged by HITACHI limit sample				○	-
	Color Uniformity	Same as Above				○	-
	Pinhole	Average diameter D(mm)		Maximum number acceptable		○	-
		D≦0.15		Ignore			
		0.15<D≦0.3		10			
		C≦0.015		ignore			
	Contrast Irregularity (Spot)	Average diameter D(mm)	Contrast	Maximum number acceptable	Minimum space		
		D≦0.25	To be judged by HITACHI	Ignore	-		
		0.25<D≦0.35		10	20mm		
		0.35<D≦0.5		4	20mm		
		0.5 <D		None	-		

No.	ITEM	CRITERIA				A	B
LCD	Contrast Irregularity (Line) (Filamentous)	Width D(mm)	Length L(mm)	Maximum number acceptable	Minimum space	○	-
		W≦0.25	L≦1.2	2	20mm		
		W≦0.2	L≦1.5	3	20mm		
		W≦0.15	L≦2.0	3	20mm		
		W≦0.1	L≦3.0	4	20mm		
		Total		6			
	Rubbing Scratch	To be judged by HITACHI standard				○	-

Note

(1) Definition of average diameter D

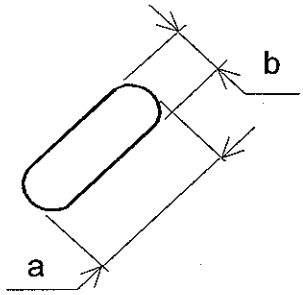

$$D = \frac{a+b}{2}$$

(2) Definition of length L and width W

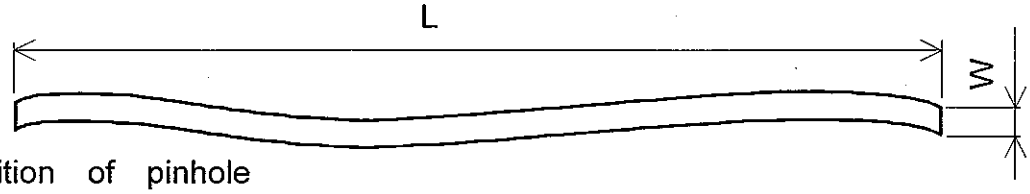

(3) Definition of pinhole

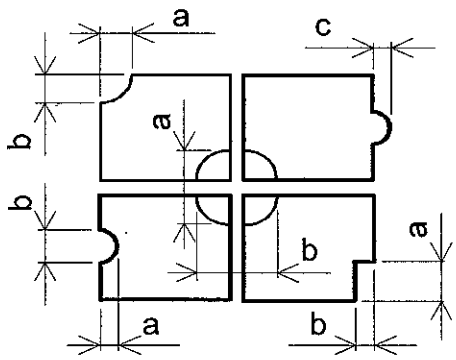

c : Salience

(3)Touch panel appearance

Visual inspection should be done under the following condition.

*) The inspection should be done in a dark room.
(about 1000(lx),500(lx)min. and non-directive)

*) The distance between eyes of an inspector and the LCD module is 30 cm.

No.	ITEM	CRITERIA			APPLIED ZONE
TOUCH PANEL	Scratches	Width W(mm)	Length L(mm)	Maximum number acceptable	A,B
		W>0.1	L≧10	None	
		0.10≧W>0.05	L<10	4 pcs max.	
		0.05≧W	L<10	Ignored	
	Foreign Materials	Filamentous (Line shape)			A,B
		Width W(mm)	Length L(mm)	Maximum number acceptable	
		W>0.10	-	Dust (circular)	
		0.10≧W>0.05	3<L	None	
		0.05≧W	L≦3	Ignored	
		Round(Dot shape)			A,B
		Average diameter D(mm)		Maximum number acceptable	
		D>0.35		None	
		0.35≧D>0.25		6 psc max.	B
		D≦0.25		Ignored	A,B
	Newton Ring (Touch Panel)	Need to discuss with customer			A,B
	Touch Panel Uncleanliness	No conspicuous dirt			A
	Rubbing Scratch	To be judged by HITACHI standard			-

(4) Glass indentation

ITEM	SPECIFICATIONS
Common Indentation	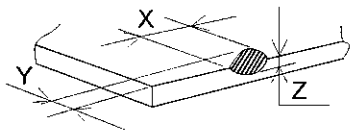 X: ≦5.0, Y: ≦3.0, Z: ≦T
Corner Broken	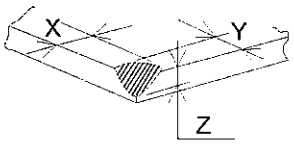 X: ≦3.0, Y: ≦3.0, Z: ≦T
Proceeding Crack	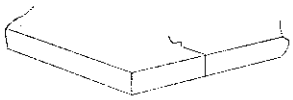 None

11. PRECAUTION IN DESIGN

11.1 LC DRIVING VOLTAGE (VLCD) AND VIEWING ANGLE RANGE

Setting VLCD out of the recommended condition will be a cause for a change of viewing angle range.

111.2 PRECAUTIONS AGAINST STATIC CHARGE

As this module contains C-MOS LSIs , it is not strong against electrostatic discharge. Make certain that the operator's body is connected to the ground through a list band etc. And don't touch I/F pins directly.

11.3 POWER ON SEQUENCE

Input signals should not be applied to LCD module before power supply voltage is applied and reaches to specified voltage (VDD).

If above sequence is not kept, C-MOS LSIs of LCD modules may be damaged due to latch up problem.

11.4 PACKAGING

(1) No leaving product is preferable in the place of high humidity for a long period of time. For their storage in the place where temperature is 35 ℃ or higher, special care to prevent them from high humidity is required. A combination of high temperature and high humidity may cause them polarization degradation as well as bubble generation and polarizer peel-off. Please keep the temperature and humidity within the specified range for use and storage.

(2) Since polarizers tend to be easily damaged, They should be handled full with care so as not to get them touched, pushed or rubbed.

(3) As the adhesives used for adhering polarizers are made of organic substances which will be deteriorated by a chemical reaction with such chemicals as acetone, toluene, ethanol and isopropyl alcohol. The following solvents are recommended for use:
Normal hexane
Please contact us when it is necessary for you to use chemicals.

(4) Lightly wipe to clean the dirty surface with absorbent cotton waste or other soft material like chamois , soaked in the chemicals recommended without scrubbing it hardly. To prevent the display surface from damage and keep the appearance in good state, it is sufficient, in general, to wipe it with absorbent cotton.

(5) Immediately wipe off saliva or water drop attached on the display area because its long period adherence may cause deformation or faded color on the spot.

(6) Foggy dew deposited on the surface due to coldness will be caused for polarizer damage, stain and dirt on product. When necessary to take out the products from some place at low temperature for test, etc. It is required for them to be warmed up in a container once at the temperature higher than that of room.

(7) Touching the display area and contact terminals with bare hands and contaminating them are prohibited, because the stain on the display area and poor insulation between terminals are often caused by being touched by bare hands. (Some cosmetics are detrimental to polarizers.)

(8) In general the quality of glass is fragile so that it tends to be cracked or chipped in handling, specially on its periphery. Be careful not to give it sharp shock caused by dropping down, etc.

11.5 CAUTION FOR OPAERATION

(1) It is an indispensable condition to drive LCDs within the specified voltage limit since the higher voltage than the limit causes the shorter LCD life. An electrochemical reaction due to direct current causes LCDs undesirable deterioration , so that the use of direct current driver should be avoided.

(2) Response time will be extremely delayed at lower temperature than the operating temperature range and on the other hand at higher temperature LCDs show dark blue color in them. However those phenomena do not mean malfunction or out of order with LCDs which will come back in the specified operating temperature range.

(3) If the display area is pushed hard during operation, some font will be abnormally displayed but it resumes normal condition after turning off once.

(4) A slight dew depositing on terminals is a cause for electrochemical reaction resulting in terminal open circuit. Usage under the relative condition of 40 ℃ 50%RH or less is required.

11.6 STORAGE

In case of storing for a long period of time (for instance , for years) for the purpose of replacement use , the following ways area recommended.

(1) Storage in a polyethylene bag with the opening sealed , so the fresh air will not be entered from outside .

(2) Placing in a dark place where neither exposure to direct sunlight nor light is , keeping temperature in the range from 0℃ to 35℃.

(3) Storing with no touch on polarizer surface by anything else. (It is recommended to store them as they have been contained in the inner container at the time of delivery from us.)

11.7 SAFETY

(1) It is recommendable to crash damaged or unnecessary LCDs into pieces and wash off liquid crystal by either of solvents such as acetone and ethanol , which should be burned up later.

(2) When any liquid leaked out of a damaged glass cell comes in contact with your hands , please wash it off well with soap and water.

12. DESIGNATION OF LOT MARK

LOT MARK

Lot mark is consisted of 4 digital number.

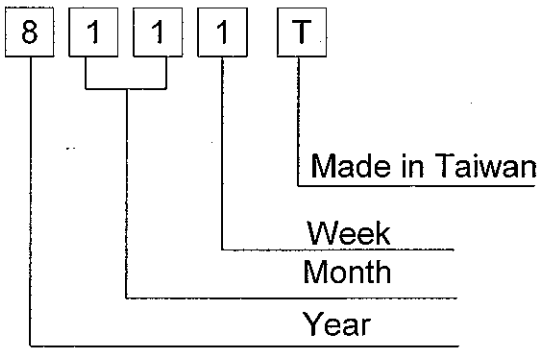

YEAR	FIGURE IN LOT MARK
2008	8
2009	9
2010	0
2011	1
2012	2

Note 1. Some products have alphabet at the end or the first.

MONTH	FIGURE IN LOT MARK	MONTH	FIGURE IN LOT MARK
Jan.	01	Jul.	07
Feb.	02	Aug.	08
Mar.	03	Sep.	09
Apr.	04	Oct.	10
May	05	Nov.	11
Jun.	06	Dec.	12

WEEK (DAY IN CALENDAR)	FIGURE IN LOT MARK
01~07	1
08~14	2
15~21	3
22~28	4
29~31	5

Location of lot mark : on the back side of LCM

8 1 1 1 T

13. PRECAUTION FOR USE

13.1 A limit sample should be provided by the both parties on an occasion when the both parties agreed its necessity. Judgment by a limit sample shall take effect after the limit sample has been established and confirmed by the both parties.

13.2 On the following occasions, the handling of the problem should be decided through discussion and agreement between responsible persons of the both parties.

(1) When a question is arisen in the specifications.

(2) When a new problem is arisen which is not specified in this specifications.

(3) When an inspection specifications change or operating condition change in customer is reported to HITACHI, and some problem is arisen in this specification due to the change.

(4) When a new problem is arisen at the customer's operating set for sample evaluation in the customer site.

The precaution that should be observed when handling LCM have been explained above. If any points are unclear or if you have any request , please contact HITACHI.