HITACHI
Hitachi Displays, Ltd.

Date; Mar. 12, 2003

CUSTMER'S ACCEPTANCE SPECIFICATIONS

TFTMD38971CBA

CONTENTS

No.	I t e m	Sheet No.	Page
—	COVER	3284PS 2601-TFTMD38971CBA-1	1-1/1
—	RECORD OF REVISION	3284PS 2602-TFTMD38971CBA-1	2-1/1
—	APPLICATION	3284PS 2603-TFTMD38971CBA-1	3-1/1
1	ABSOLUTE MAXIMUM RATING	3284PS 2604-TFTMD38971CBA-1	4-1/2～2/2
2	OPTICAL CHARACTERISTICS	3284PS 2605-TFTMD38971CBA-1	5-1/2～2/2
3	ELECTRICAL CHARACTERISTICS	3284PS 2606-TFTMD38971CBA-1	6-1/1
4	BLOCK DIAGRAM	3284PS 2607-TFTMD38971CBA-1	7-1/1
5	INTERFACE PIN CONNECTION	3284PS 2608-TFTMD38971CBA-1	8-1/5～5/5
6	INTERFACE TIMING FOR LVDS TRANSMITTER	3284PS 2609-TFTMD38971CBA-1	9-1/4～4/4
7	DIMENSIONAL OUTLINE	3284PS 2610-TFTMD38971CBA-1	10-1/1
8	DISIGNATION OF LOT MARK	3284PS 2611-TFTMD38971CBA-1	11-1/2～2/2
9	COSMETIC SPECIFICATION	3284PS 2612-TFTMD38971CBA-1	12-1/3～3/3
10	PRECAUTIONS	3284PS 2613-TFTMD38971CBA-1	13-1/4～4/4

Please return 1 copy with your signature on this page for approval.

Accepted by : _____

Proposed by : _____

date : _____

RECORD OF REVISION

Date	Old Sheet No. New Sheet No.	Summary

S C O P E

This specification is applied to the following TFT Liquid Crystal Display Module with Back-light unit.

Note : Inverter device for Back-light is not built in and so it needs to be prepared on yourside.

・Type name	: TFTMD38971CBA
・Display Area	: H304.5×V228.375 [mm]
・Display Dots (Display Pixels)	: H(1400×3)×V1050 [dots] (H1400×V1050 pixels)
・Voltage of V_{DD}	: 3.3V
・Pixel Pitch	: H0.2175×V0.2175
・Color Pixel Arrangement	: R·G·B Vertical Stripe
・Display Mode	: Transmissive & Normally White Mode
・Color Number	: 262k Colors
・Direction with Wider Viewing Angle	: Lower side of 6 o'clock (Azomuth ϕ=270°)
・Dimensions Outlines	: 317.3(W)×242.1(H)×7.5MAX(T) [mm]
・Weight	: (640) [g]
・Interface	: 2ch-LVDS
・Surface Polarizing Film	: Polarizing Film with Antiglare Coating
・Back-light	: One Cold Cathode Florescent Lamp (Lower side) Back-light inverter is not contained in Module.

1. ABSOLUTE MAXIMUM RATINGS

1.1 ENVIRONMENTAL ABSOLUTE MAXIMUM RATINGS

ITEM	OPERATING		STORAGE		UNIT	NOTE
	MIN.	MAX.	MIN.	MAX.		
Ambient Temperature	10	40	−20	60	℃	1)
Humidity	2)		2)		%RH	1)
Vibration	−	4.9 (0.5G)	−	19.6 (2G)	m/s^2	3) ,5)
Shock	−	29.4(3G)	−	490 (50G)		4) ,5)
Corrosive Gas	NOT ACCEPTABLE		NOT ACCEPTABLE		−	
Illuminance at LCD surface	−	50,000	−	50,000	1x	

Note 1) Environmental temperature and humidity of this unit, not of system installed with this unit.
At low temperature the brightness of CFL drop and the life time of CFL become to be short.
2) Ambient temp. Ta≦40℃ : 85%RH MAX. without condensation
Ta>40℃ : Absolute humidity must be lower than the saturated vapor of 85%RH at 40℃. without condensation
3) Vibration frequency : 20～50Hz. (Except resonance frequency)
4) 7ms of pulse width.
5) With mounting protective spacer(ref.page 4-2/2)

1.2 ELECTRICAL ABSOLUTE MAXIMUM RATINGS

(1) TFT LIQUID CRYSTAL DISPLAY MODULE Vss=0V

ITEM	SYMBOL	MIN.	MAX.	UNIT	NOTE
Power Supply Voltage	VDD	0	4.0	V	
Electrostatic Durability	VESD0	±100		V	1), 2)
	VESD1	± 8		kV	1), 3)

Note 1) Discharge circuit : 200pF-250Ω, Surrounding : 25℃-70%RH.
2) The specification is applicable to I/F Connector pins.
3) The specification is applicable to metal bezel and LCD glass.

(2) BACK-LIGHT UNIT GND=0V

ITEM	SYMBOL	MIN.	MAX.	UNIT	NOTE
Lamp Current	IL	0	7.0	mArms	1)
Lamp Voltage	VL	0	2000	Vrms	

Note 1) At Lamp start-up time.

Adding protective spacer at shock & vibration test

Shaded area is to be supported with additional spacer.

(1) This protective spacer is to be added at shock and vibration test on the front side

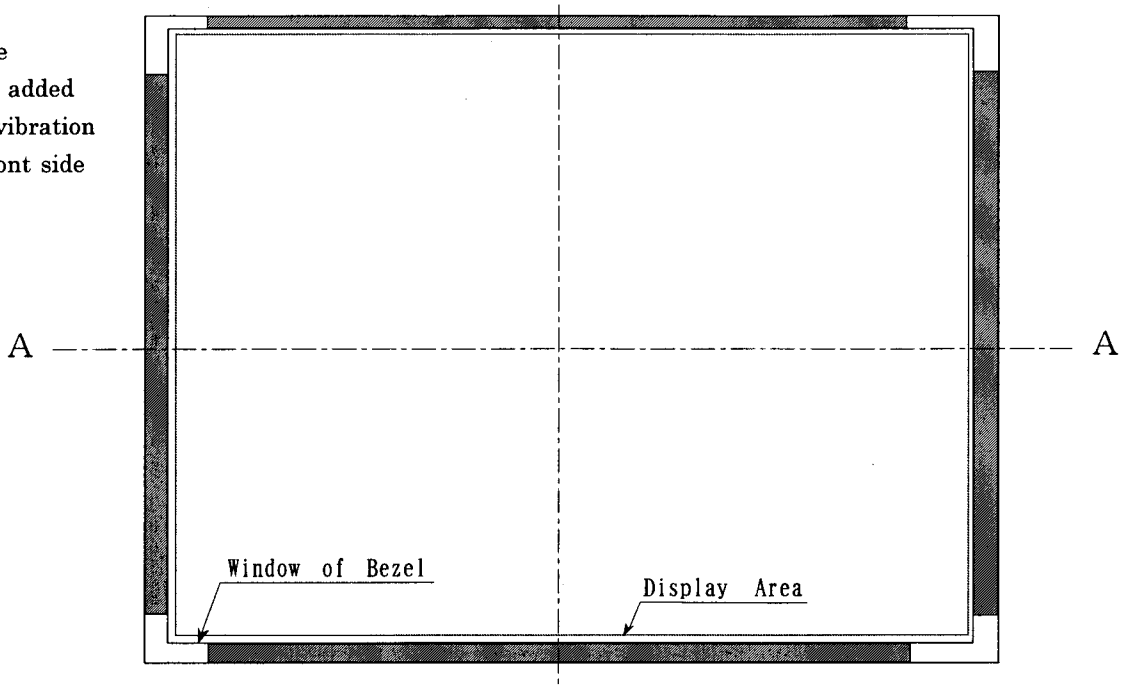

Shaded area is to be supported with additional spacer.

(2) This protective spacer is to be added shock and vibration test on the back side

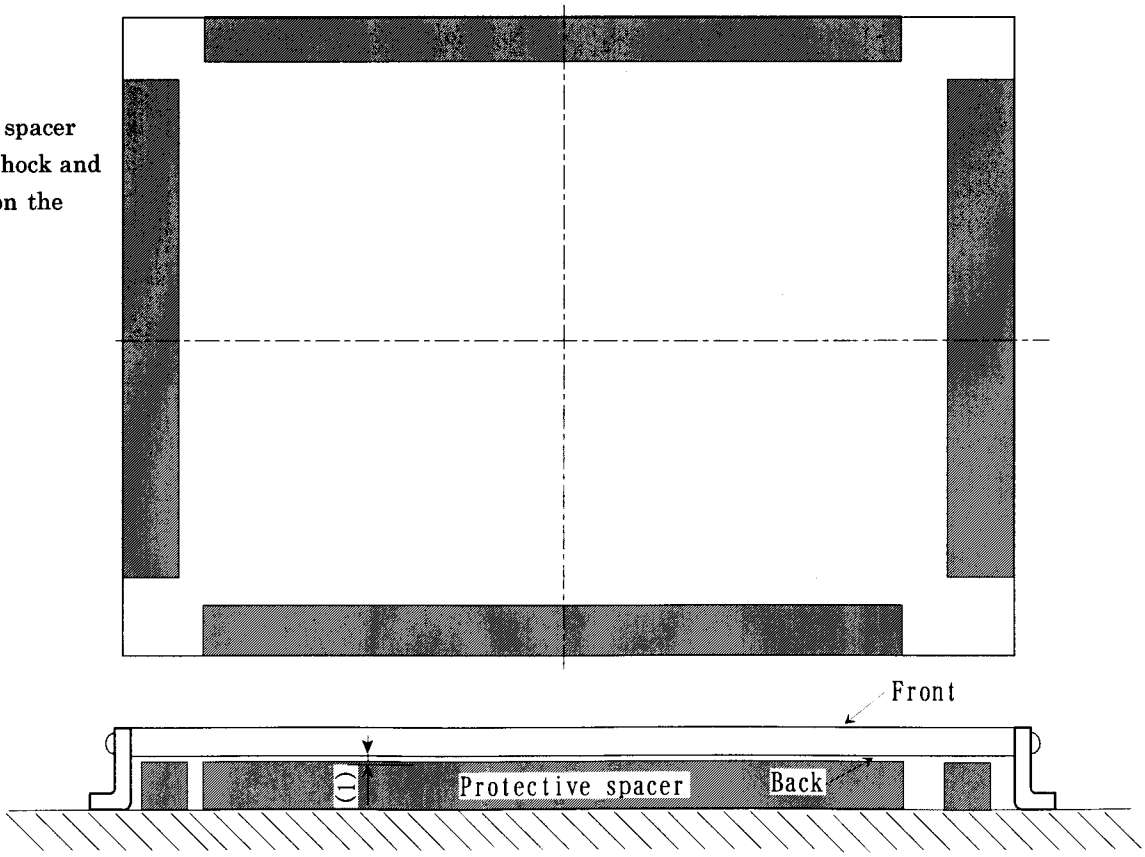

Hitachi Displays, Ltd.	Date	Mar. 12, 2003	Sh. No.	3284PS 2604-TFTMD38971CBA-1	Page	4-2/2

2. OPTICAL CHARACTERISTICS

The following items are measured on the conditions that this unit operation (TFT panel and Back-light) and measuring systems are stable.

The ambient light excluding The Back-light unit is nothing.

- Measuring equipment : TOPCON BM-7, Prichard 1980B, or equivalent
- Measuring point : Active area center

Temperature of LCD=25℃, V_{DD}=3.3V, fv=60Hz, I_L=6mA,
Back-Light operation Frequency=50kHz

ITEM		SYMBOL	CONDITION	MIN.	TYP.	MAX.	UNIT	NOTE
Contrast Ratio		CR	$\theta=0°$ Note 1)	100	—	—	—	2)
Response Time	RISE	tr		—	37	—	ms	3)
	FALL	tf		—	20	—		
Brightness(White)		Bwh		170	200	—	cd/m²	
Color of CIE	Red	x		—	(0.59)	—	—	
		y		—	(0.35)	—		
	Green	x		—	(0.32)	—		
		y		—	(0.57)	—		
	Blue	x		—	(0.15)	—		
		y		—	(0.15)	—		
	White	x		—	(0.34)	—		
		y		—	(0.37)	—		

Note 1) Definition of Viewing Angle

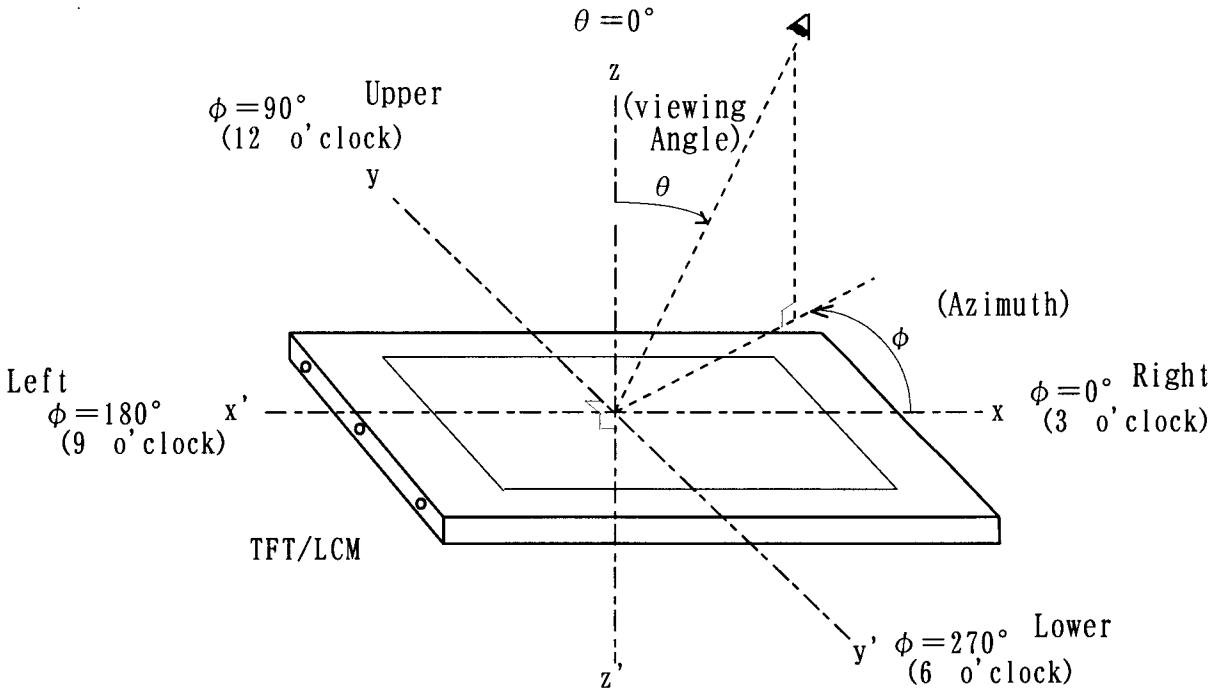

Note 2) Definition of Contrast Ratio (CR)

$$CR = \frac{\text{Brightness when displaying White raster}}{\text{Brightness when displaying Black raster}}$$

These Brightness is measured on the center of screen.

* Measurement in the darkroom.

Note 3) Definition of Response Time

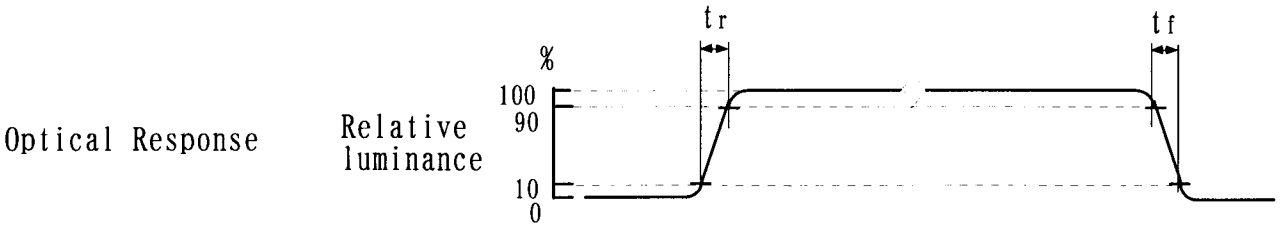

1. ELECTRICAL CHARACTERISTICS

(1) TFT LIQUID CRYSTAL DISPLAY MODULE

Ta=25℃, Vss=0V

ITEM		SYMBOL	MIN.	TYP.	MAX.	UNIT	NOTE
Power Supply Voltage		V_{DD}	3.0	3.3	3.6	V	
Differential Input Voltage for LVDS Receiver Threshold	Hi	V_{IH}	—	—	+100	mV	1)
	Lo	V_{IL}	-100	—	—		
Power Supply Current		I_{DD}	—	500	900	mA	2), 3)
Vsync Frequency		fv	—	60	65	Hz	4)
Hsync Frequency		f_H	—	61	76	kHz	4)
DCLK Frequency		f_{CLK}	51	54	57	MHz	4)

Note 1) Common Mode Voltage V_{CM}=+1.25V
2) fv=60Hz, f_{CLK}=54MHz, V_{DD}=3.3V, DC Current is measured with the method as below.

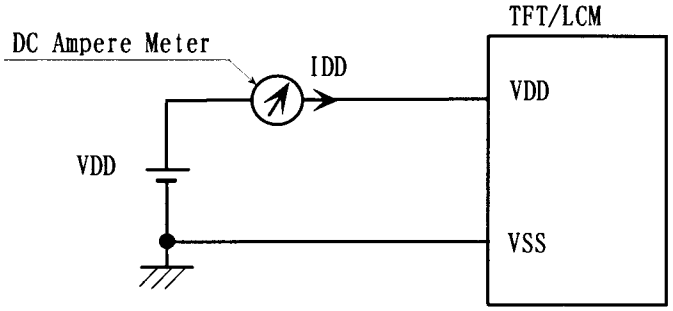

Typical value is measured when displaying vertical with 63th gray scale.
Maximum is measured when displaying Vertical-stripe(Black-7 Gray scale)
3) Current capacity for VDD power supply should be larger than 3A, so that the fuse built in the unit(Maximum) could appropriately work in the abnormal.
4) For LVDS Transmitter Input.

(2) BACK-LIGHT UNIT

Ta=25℃

ITEM	SYMBOL		MIN.	TYP.	MAX.	UNIT	NOTE
Lamp Current	I_L		4.0	—	6.0	mArms	1), 2), 5)
			—	—	10	mA0-peak	
Lamp Voltage	V_L		—	690	—	Vrms	
Frequency	f_L		40	50	70	kHz	3)
Starting Lamp Voltage	Vs	Ta=25℃	1100	—	—	Vrms	4)
		Ta=10℃	1500	—	—		4)

NOTE 1) Higher IL cause the short life time of CFL.
2) DC current cause irregular fluorescence and the short life of CFL.
3) Lamp ooperation frequency may produce interference with Hsync frequency, which causes rolling or flickering screen. Therefore lamp operation frequency shall be as different as possible from Hsync frequency, to avoid interference.
4) Lamp start-up voltage should be more than Vs(min)
5) Reducing Lamp current increases Lamp voltage and generally increases Lamp operation frequency.
CFL inverter should be designed with taking account of minimizing the leakage current from the high-voltage output.

4. BLOCK DIAGRAM

(1) TFT LIQUID CRYSTAL DISPLAY MODULE

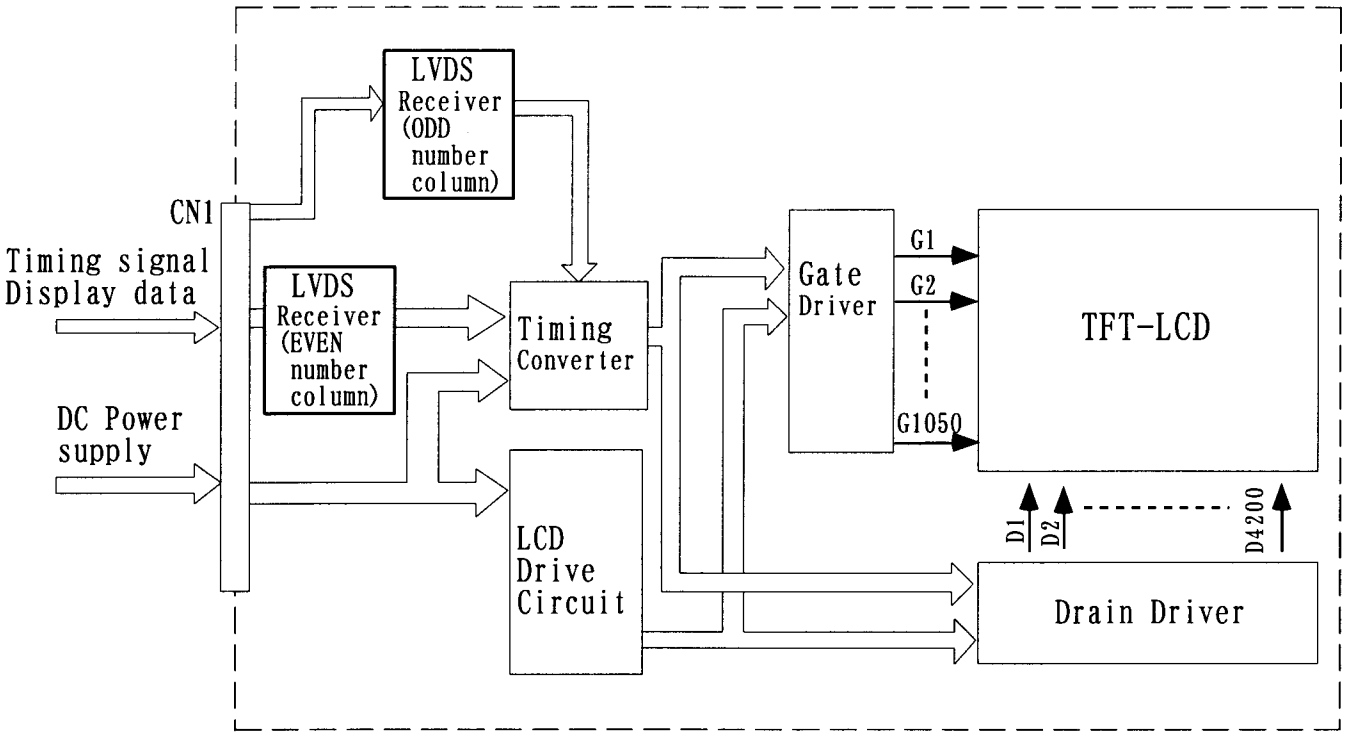

(2) BACK-LIGHT UNIT

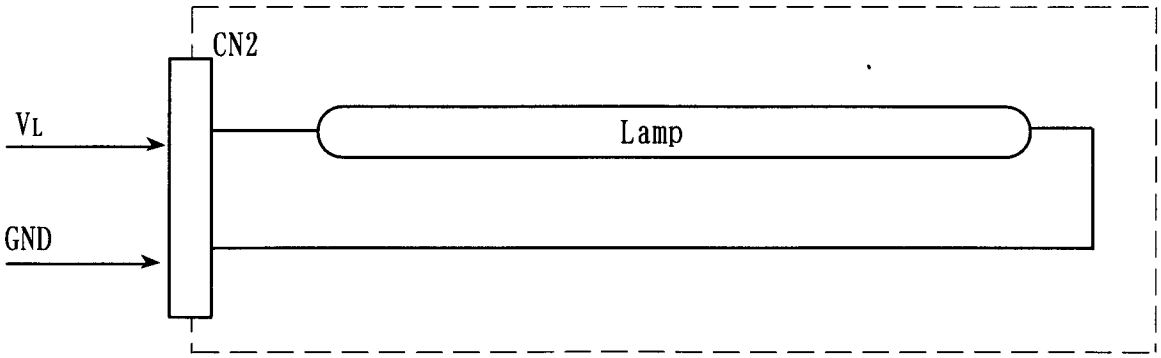

5. INTERFACE PIN CONNECTION

(1) TFT LIQUID CRYSTAL DISPLAY MODULE

CN1 《JAE FI-XB30S-HF10 or Compatible》

Pin No	SYMBOL	FUNCTION
1	VSS	Ground
2		
3	VDD	Power Suply 3.3V (typical)
4		
5	NC	Reserved for supplier test point (keep open)
6	NC	Reserved for supplier test point (keep open)
7	NC	Reserved for supplier test point (keep open)
8	NC	Reserved for supplier test point (keep open)
9	REin0-	EVEN LVDS Receiver Signal(-)
10	REin0+	EVEN LVDS Receiver Signal(+)
11	VSS	Ground
12	REin1-	EVEN LVDS Receiver Signal(-)
13	REin1+	EVEN LVDS Receiver Signal(+)
14	VSS	Ground
15	REin2-	EVEN LVDS Receiver Signal(-)
16	REin2+	EVEN LVDS Receiver Signal(+)
17	VSS	Ground
18	CLKE-	EVEN LVDS Clock Signal(-)
19	CLKE+	EVEN LVDS Clock Signal(+)
20	VSS	Ground
21	ROin0-	ODD LVDS Receiver Signal(-)
22	ROin0+	ODD LVDS Receiver Signal(+)
23	VSS	Ground
24	ROin1-	ODD LVDS Receiver Signal(-)
25	ROin1+	ODD LVDS Receiver Signal(+)
26	VSS	Ground
27	ROin2-	ODD LVDS Receiver Signal(-)
28	ROin2+	ODD LVDS Receiver Signal(+)
29	VSS	Ground
30	CLKO-	ODD LVDS Clock Signal(-)
31	CLKO-	ODD LVDS Clock Signal(+)
32	VSS	Ground

(2) BACK-LIGHT UNIT

CN2 《JST BHSR-02VS-1》

Pin No	SYMBOL	DESCRIPTION
1	V_L	Power Supply
2	GND	GND (0V)

LVDS INTERFACE

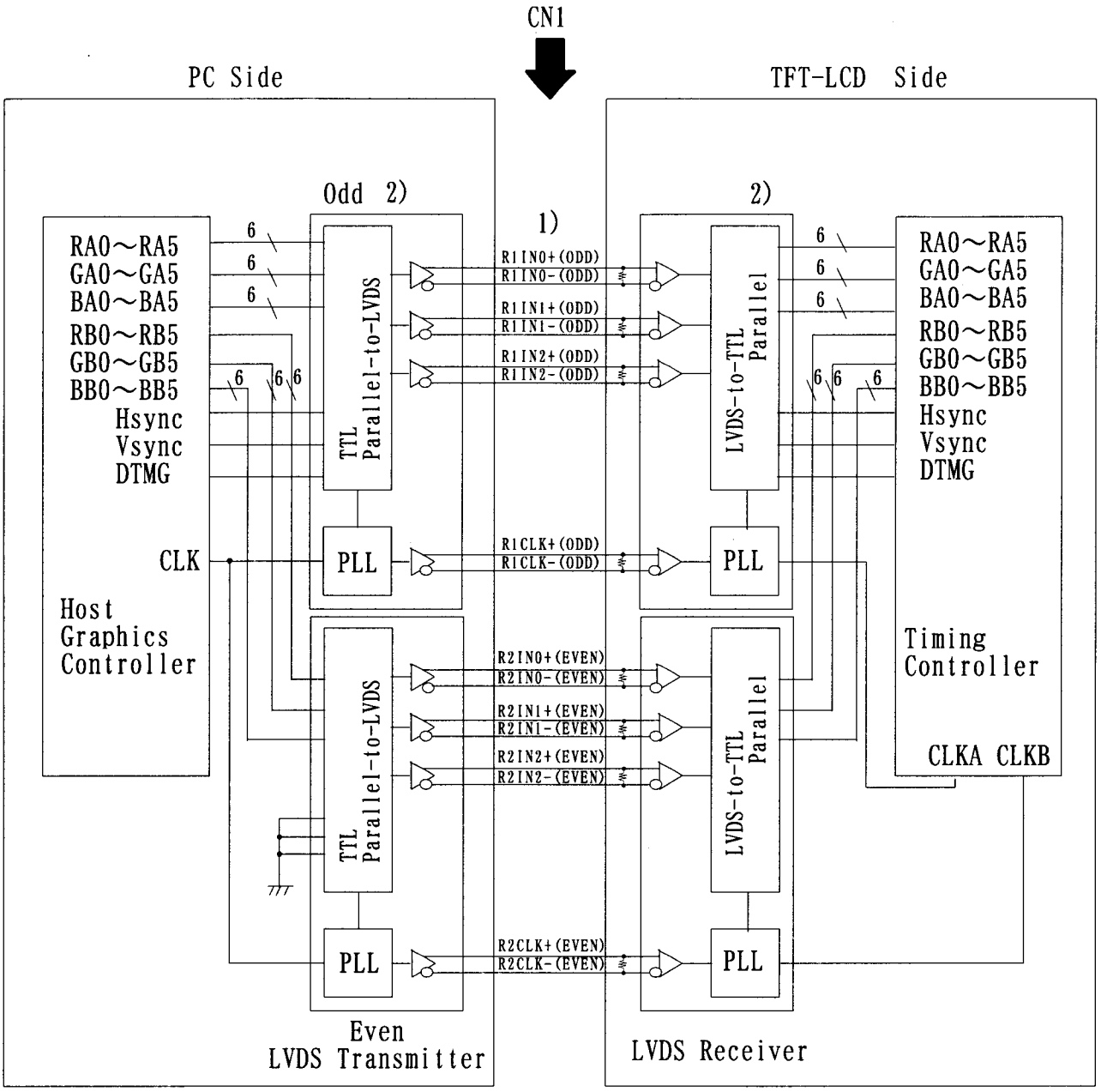

NOTE: 1) LVDS cable impedance should be 100 ohms per signal line when each 2-lines(+,-) is used in differential mode.
2) LVDS transmitter is not contained in the Module.
3) Odd data ; RA0～RA5, GA0～GA5, BA0～BA5, Hsync, Vsync, DTMG
Even data ; RB0～RB5, GA0～GA5, BB0～BB5, Vss, Vss, Vss

LVDS INPUT SIGNAL

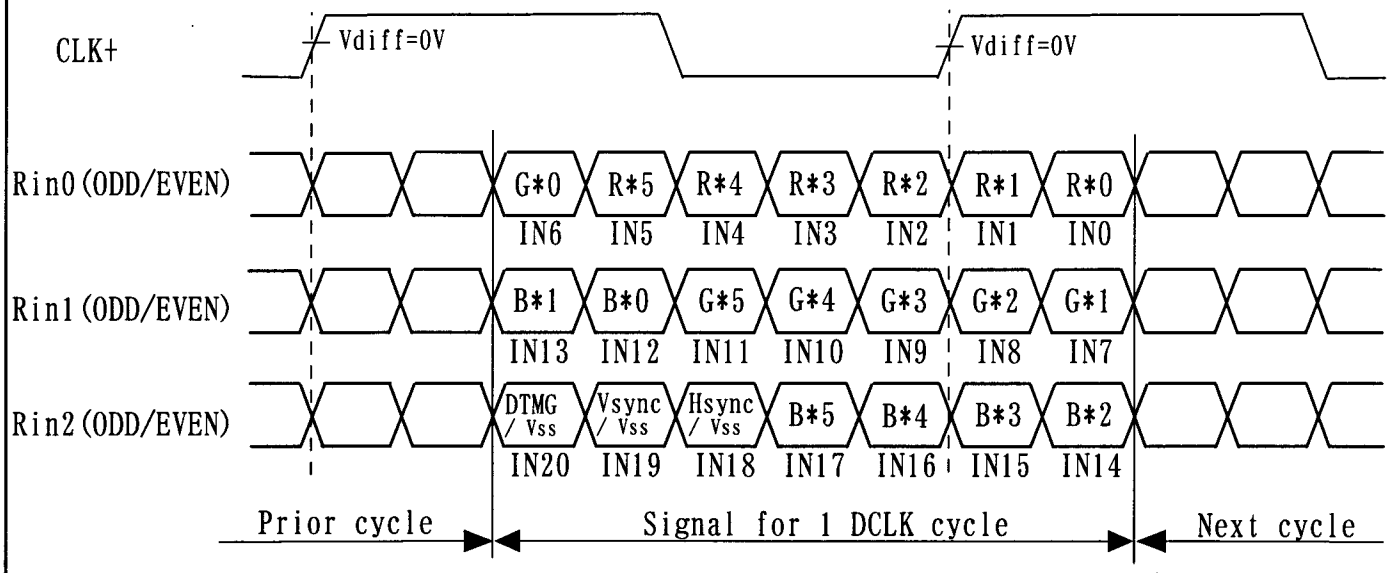

Pin connection in case of using
TI SN75LVDS84

Odd Data

Graphic Controller output	Transmitter SN75LVDS84
DCLK	CLK IN(26)
RA0	IN0(44)
RA1	IN1(45)
RA2	IN2(47)
RA3	IN3(48)
RA4	IN4(1)
RA5	IN5(3)
GA0	IN6(4)
GA1	IN7(6)
GA2	IN8(7)
GA3	IN9(9)
GA4	IN(10)
GA5	IN11(12)
BA0	IN12(13)
BA1	IN13(15)
BA2	IN14(16)
BA3	IN15(18)
BA4	IN16(19)
BA5	IN17(20)
Hsync	IN18(22)
Vsync	IN19(23)
DTMG	IN20(25)

EVEN

Graphic Controller output	Transmitter SN75LVDS84
DCLK	CLK IN(26)
RB0	IN0(44)
RB1	IN1(45)
RB2	IN2(47)
RB3	IN3(48)
RB4	IN4(1)
RB5	IN5(3)
GB0	IN6(4)
GB1	IN7(6)
GB2	IN8(7)
GB3	IN9(9)
GB4	IN(10)
GB5	IN11(12)
BB0	IN12(13)
BB1	IN13(15)
BB2	IN14(16)
BB3	IN15(18)
BB4	IN16(19)
BB5	IN17(20)
Vss	IN18(22)
Vss	IN19(23)
Vss	IN20(25)

1) ( ) indicate pin NO (IC).
2) Even IN18～20 are connected to Vss

CORRESPONDENCE BETWEEN INPUT DATA AND SCREEN IMAGE FOR LVDS TRANSMITTER

Display data of each adjacent two pixels are latched during one cycle of DCLK.

(1, 1)			(1, 2)		
RA	GA	BA	RB	GB	BB

First Pixel Deta : RA0～RA5, GA0～GA5, BA0～BA5
Second Pixel Data : RB0～RB5, GB0～GB5, BB0～BB5

1, 1	1, 2	1, 3	————————————————	1, 1400
2, 1	2, 2	2, 3	————————————————	2, 1400
3, 1	3, 2	3, 3	————————————————	3, 1400
:	:	:		:
:	:	:		:
:	:	:		:
1050, 1	1050, 2	1050, 3	————————————————	1050, 1400

Location of screen corresponding to each input data

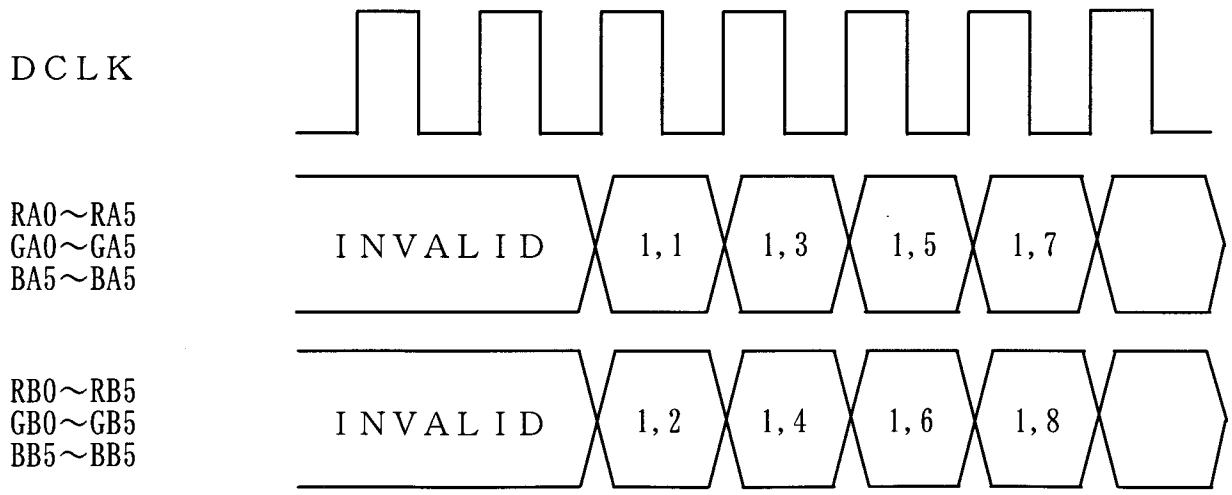

RELATIONSHIP BETWEEN DISPLAYED COLOR AND INPUT DATA

COLOR \ INPUT DATA		R DATA						G DATA						B DATA					
		R5	R4	R3	R2	R1	R0	G5	G4	G3	G2	G1	G0	B5	B4	B3	B2	B1	B0
		MSB					LSB	MSB					LSB	MSB					LSB
BASIC COLOR	BLACK	0	0	0	0	0	0	0	0	0	0	0	0	0	0	0	0	0	0
	RED(63)	1	1	1	1	1	1	0	0	0	0	0	0	0	0	0	0	0	0
	GREEN(63)	0	0	0	0	0	0	1	1	1	1	1	1	0	0	0	0	0	0
	BLUE(63)	0	0	0	0	0	0	0	0	0	0	0	0	1	1	1	1	1	1
	CYAN	0	0	0	0	0	0	1	1	1	1	1	1	1	1	1	1	1	1
	MAGENTA	1	1	1	1	1	1	0	0	0	0	0	0	1	1	1	1	1	1
	YELLO	1	1	1	1	1	1	1	1	1	1	1	1	0	0	0	0	0	0
	WHITE	1	1	1	1	1	1	1	1	1	1	1	1	1	1	1	1	1	1
RED	BLACK	0	0	0	0	0	0	0	0	0	0	0	0	0	0	0	0	0	0
	RED(1)	0	0	0	0	0	1	0	0	0	0	0	0	0	0	0	0	0	0
	RED(2)	0	0	0	0	1	0	0	0	0	0	0	0	0	0	0	0	0	0
	⋮	⋮	⋮	⋮	⋮	⋮	⋮	⋮	⋮	⋮	⋮	⋮	⋮	⋮	⋮	⋮	⋮	⋮	⋮
	RED(61)	1	1	1	1	0	1	0	0	0	0	0	0	0	0	0	0	0	0
	RED(62)	1	1	1	1	1	0	0	0	0	0	0	0	0	0	0	0	0	0
	RED(63)	1	1	1	1	1	1	0	0	0	0	0	0	0	0	0	0	0	0
GREEN	BLACK	0	0	0	0	0	0	0	0	0	0	0	0	0	0	0	0	0	0
	GREEN(1)	0	0	0	0	0	0	0	0	0	0	0	1	0	0	0	0	0	0
	GREEN(2)	0	0	0	0	0	0	0	0	0	0	1	0	0	0	0	0	0	0
	⋮	⋮	⋮	⋮	⋮	⋮	⋮	⋮	⋮	⋮	⋮	⋮	⋮	⋮	⋮	⋮	⋮	⋮	⋮
	GREEN(61)	0	0	0	0	0	0	1	1	1	1	0	1	0	0	0	0	0	0
	GREEN(62)	0	0	0	0	0	0	1	1	1	1	1	0	0	0	0	0	0	0
	GREEN(63)	0	0	0	0	0	0	1	1	1	1	1	1	0	0	0	0	0	0
BLUE	BLACK	0	0	0	0	0	0	0	0	0	0	0	0	0	0	0	0	0	0
	BLUE(1)	0	0	0	0	0	0	0	0	0	0	0	0	0	0	0	0	0	1
	BLUE(2)	0	0	0	0	0	0	0	0	0	0	0	0	0	0	0	0	1	0
	⋮	⋮	⋮	⋮	⋮	⋮	⋮	⋮	⋮	⋮	⋮	⋮	⋮	⋮	⋮	⋮	⋮	⋮	⋮
	BLUE(61)	0	0	0	0	0	0	0	0	0	0	0	0	1	1	1	1	0	1
	BLUE(62)	0	0	0	0	0	0	0	0	0	0	0	0	1	1	1	1	1	0
	BLUE(63)	0	0	0	0	0	0	0	0	0	0	0	0	1	1	1	1	1	1

Note 1) Definition of gray scale :
Color(n) --- number in parenthesis indicates gray scale level.
Larger number corresponds to brighter level.
2) Data : 1:High, 0:Low

6. Interface timing

(1) LVDS receiver timing
(Interface of TFT module)

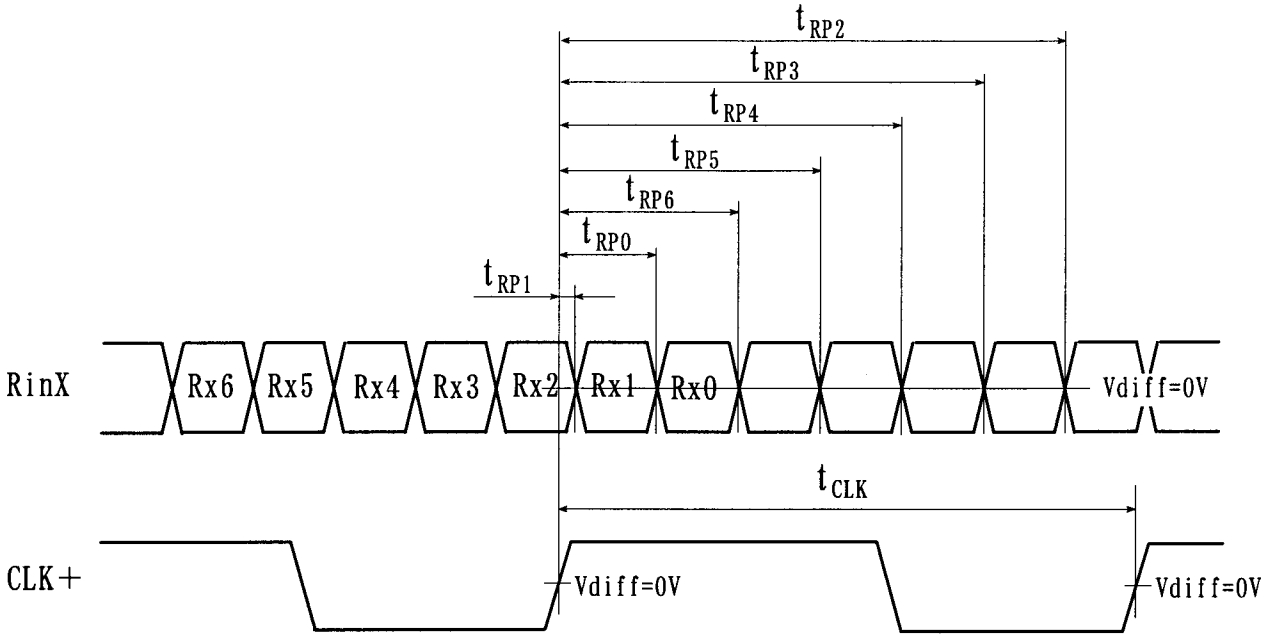

RinX=(RinX+)-(RinX-) (X=0, 1, 2)

ITEM		SYMBOL	MIN.	TYP.	MAX.	UNIT	NOTE
DCLK	Frequency	$1/t_{CLK}$	51	54	57	MHz	
RinX (X=0, 1, 2)	0 data position	t_{RP0}	$\frac{1}{7}t_{CLK}-0.49$	$\frac{1}{7}t_{CLK}$	$\frac{1}{7}t_{CLK}+0.49$		
	1st data position	t_{RP1}	-0.49	0	+0.49	ns	
	2nd data position	t_{RP2}	$\frac{6}{7}t_{CLK}-0.49$	$\frac{6}{7}t_{CLK}$	$\frac{6}{7}t_{CLK}+0.49$		
	3rd data position	t_{RP3}	$\frac{5}{7}t_{CLK}-0.49$	$\frac{5}{7}t_{CLK}$	$\frac{5}{7}t_{CLK}+0.49$		
	4th data position	t_{RP4}	$\frac{4}{7}t_{CLK}-0.49$	$\frac{4}{7}t_{CLK}$	$\frac{4}{7}t_{CLK}+0.49$		
	5th data position	t_{RP5}	$\frac{3}{7}t_{CLK}-0.49$	$\frac{3}{7}t_{CLK}$	$\frac{3}{7}t_{CLK}+0.49$		
	6th data position	t_{RP6}	$\frac{2}{7}t_{CLK}-0.49$	$\frac{2}{7}t_{CLK}$	$\frac{2}{7}t_{CLK}+0.49$		

(2) timing converter timing
(Input timing for transmitter)

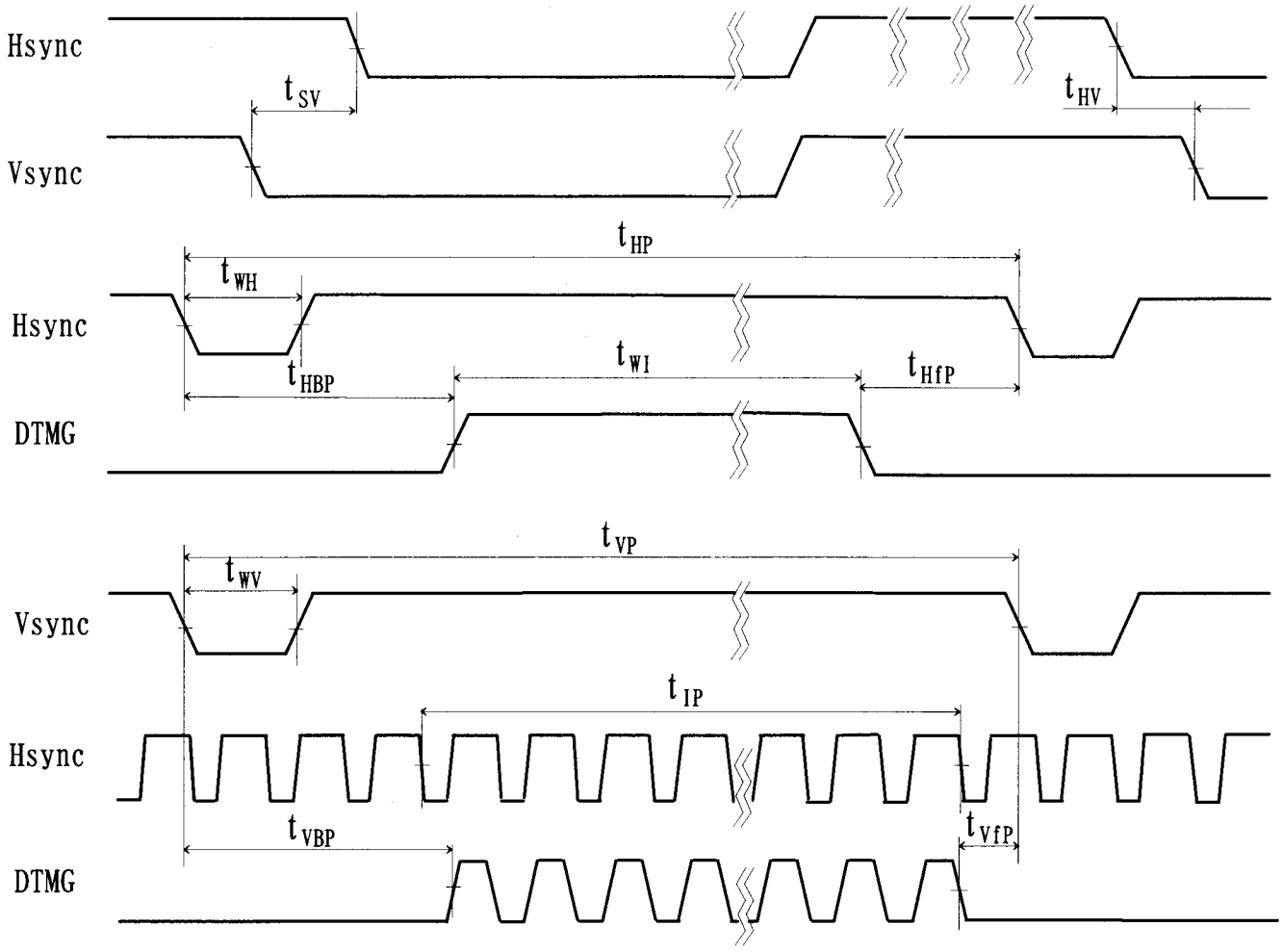

The timings except mentiond on the above should conform to the pecifications of LVDS transmitter in your system.

Item		SYMBOL	MIN.	TYP.	MAX.	UNIT	NOTE
Hsync	Period	t_{HP}	820	844	1023	t_{CLK}	
	Width-Active	t_{WH}	(10)	—	(240)		
Vsync	Set up Time	t_{SV}	(-2)	—	—	t_{CLK}	for Hsync signal
	Hold time	t_{HV}	(0)	—	—		
	period	t_{VP}	1059	1068	2047	t_{HP}	
	Width-Active	t_{WV}	1	—	(120)	t_{HP}	
DTMG	Width-Active	t_{WI}	700	700	700	t_{CLK}	
	Period	t_{IP}	1050	1050	1050	t_{HP}	
	Horizontal Back Portch	t_{HBP}	(32)	—	(120)	t_{CLK}	
	Horizontal Front Porch	t_{HFP}	(0)	—	—		
	Vertical Back Porch	t_{VBP}	0	—	—	t_{HP}	1)
	Vertical Front Porch	t_{VFP}	1	—	—		

NOTE In addition to the above, t_{VBP} and t_{VFP} should be

1) $t_{VBP}+t_{VFP} \geqq 3 \times t_{HP}$

(3)TIMING BETWEEN INTERFACE SIGNAL AND POWER SUPPLY

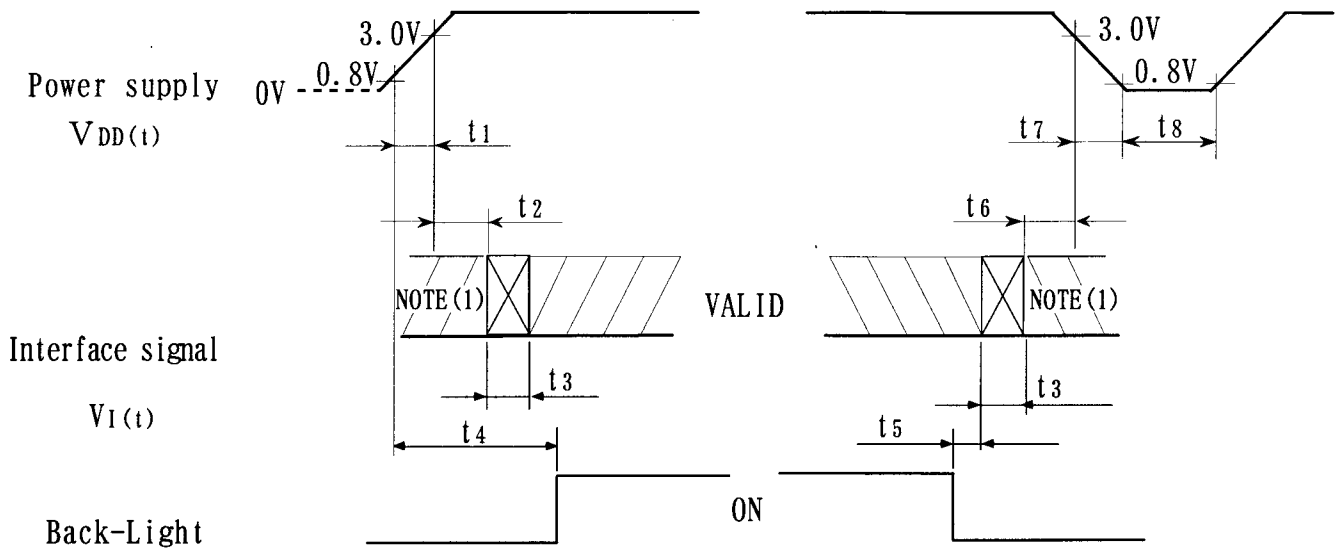

POWER ON	POWER OFF
$t_1 \leqq 15ms$	$5ms \leqq t_5$
$0 < t_2 \leqq 45ms$	$0 \leqq t_6 \leqq 45ms$
$0 \leqq t_3 \leqq 5ms$	$0 \leqq t_7 \leqq 20ms$
$0.1s \leqq t_4$	$0.4s \leqq t_8$

NOTE(1) All input are in the High impedance state during t2.

(2) t3 is needed for the signal transition between input High impedance state and valid state specified at 6(1) & (2).

7. DIMENSIONAL OUTLINE

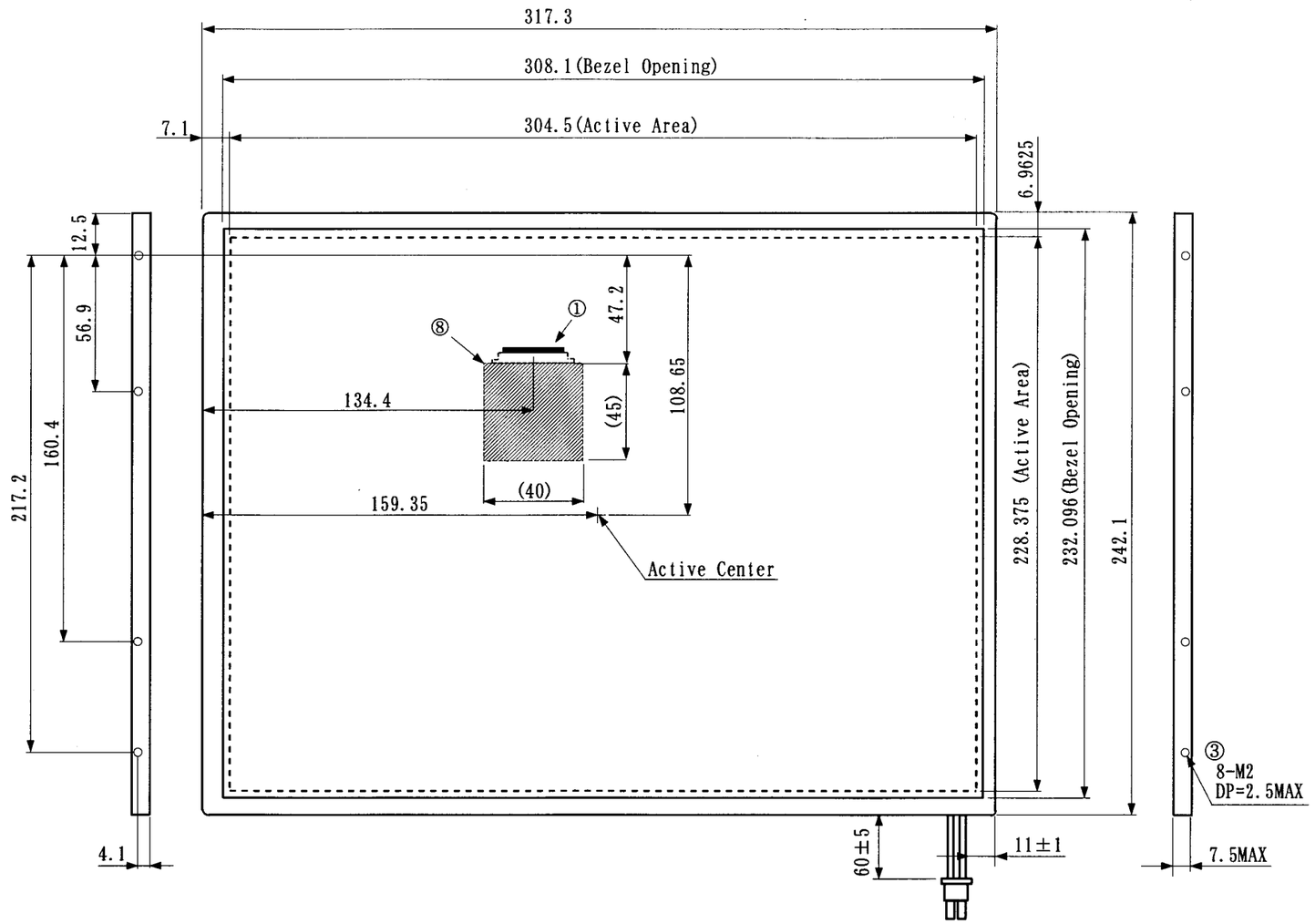

NOTES

① I/F CONNECTOR TO BE JAE CO., LTD.
THIS PART NUMBER TO BE "FI-XB30S-HF10".
② INVERTER CONNECTOR TO BE MOLEX CO.,LTD.
THIS PART NUMBER TO BE "52207-1690".
③ THESE HOLES TO BE USED FOR MOUNTING LCD MODULE IN THE SYSTEM ENCLOSURE.
MAXIMUM TORQUE FOR THE SCREW IN MOUNTING PANEL : 0.196N·m (2.0kgf·cm)
MAXIMUM PULL FOR THE SCREW IN MOUNTING PANEL : 29.4N (3kgf)
④ THE UNSPECIFIED TOLERANCE : ±0.5mm
⑤ DIMENSION MEASUREMENT SHOULD BE DONE WITH ADDING PRESSURE OF 9.8×10^4Pa
⑥ CFL CABLE AREA
⑦ 10 MAX CFL CONNECTOR HIGHT FROM BEZEL FACE
⑧ CONNECTER KEEP-OUT AREA

UNIT:mm

8. DESIGNATION OF LOT MARK

8.1 LOT MARK

Lot Mark is consisted of 4 digits for production lot and 7 digits for production control.

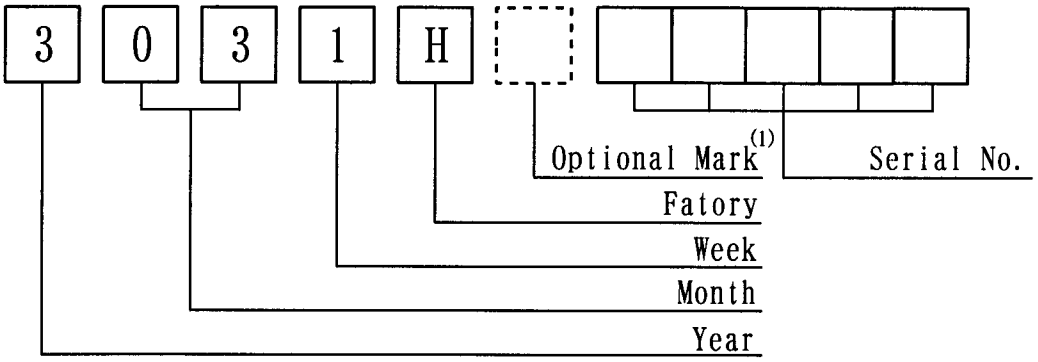

Year	Figure in Lot Mark
2003	3
2004	4
2005	5
2006	6
2007	7

Week(day in calender)	Figure in Lot Mark
1～7	1
8～14	2
15～21	3
22～28	4
29～31	5

Note 1) Optional Mark for Hitachi.

Month	Figure in Lot Mark	Month	Figure in Lot Mark
1	01	7	07
2	02	8	08
3	03	9	09
4	04	10	10
5	05	11	11
6	06	12	12

Factory	Signficance
H	Made in Japan
C	Made in China

8.2 Serial No.

Serial No. is consisted of 5 digits number (00001～99999).

8.3 LOCATION OF LOT MARK

Label is attached on the back side of module.
The items menstioned change without notice.

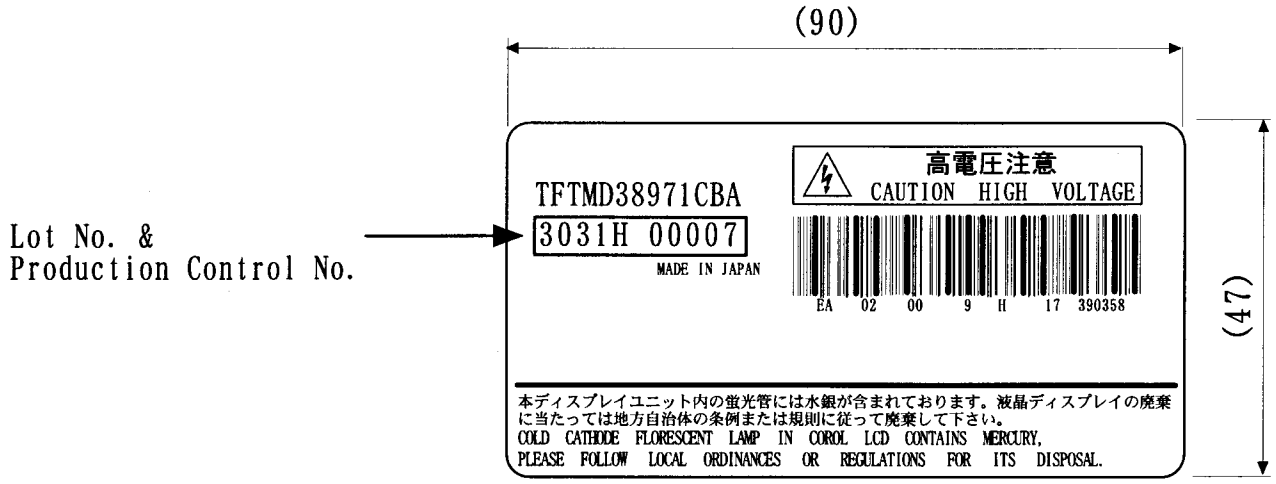

9. COSMETIC SPECIFICATIONS

9.1 CONDITIONS FOR COSMETIC INSPECTION

(1) Viewing zone

i) The figure shows the correspondence between eyes (of inspector) and TFT/LCD module.
- $\theta \leqq 45^\circ$ when non-operating inspection
- $\theta \leqq 5^\circ$ when operating inspection

ii) Inspection should be executed only from front side, and only A-zone. Cosmetic of B-zone and C-zone are ignored.
(refer to 9.2 DEFINITION OF ZONE)

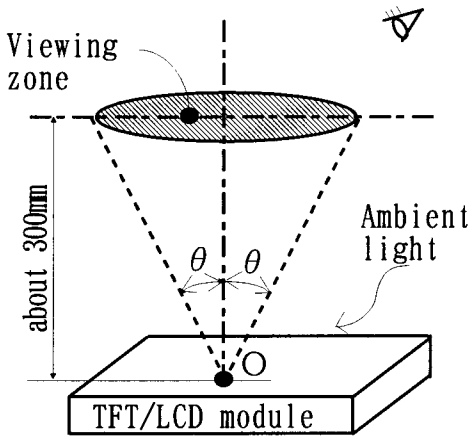

(2) Environmental

i) Temperature : 25℃
When operating inspection, surface temperature of LCD panel is 25℃.

ii) Ambient light : More than 2000 [lx] and non-directive.

iii) Back-light : When non-operating inspection, Back-light should be off.

(3) Operating inspection
Operating inspection should be done with 8 color mode (without gray scale).

9.2 DEFINITION OF ZONE

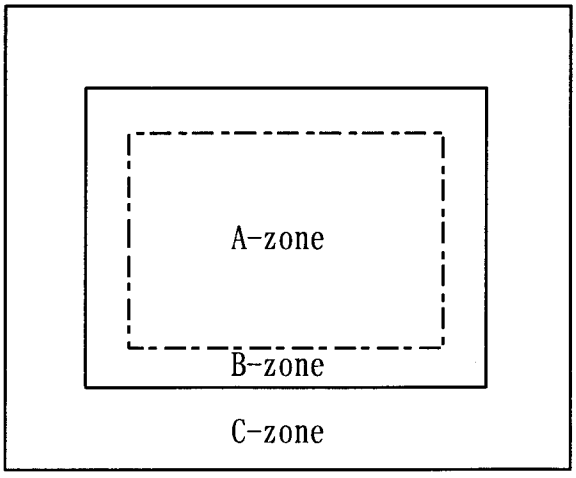

- A-zone : Display area (pixel area).
- B-zone : Area between A-zone and C-zone.
- C-zone : Metal bezel area. (Include I/F connector)

9.3 COSMETIC SPECIFICATIONS

When displaying condition is not stable (ex. at turn on or off), the following specifications are not applied.

No.	ITEM				MAXMUM ACCEPTABLE NUMBER		NOTE
					A-zone	UNIT	
1	Dot Defect	Sparkle mode	1dot		15	pcs	1),2),4)
			2dots		3	units	1),2),5)
			3dots		0		
			4dots		0		
			Density		3	pcs/φ3	1),2),6)
			Total		15	pcs	1),2)
		Black mode	1dot		15	pcs	1),3),4)
			2dots		4	units	1),3),5)
			3dots		1		
			4dots		0		
			Density		3	pcs/φ3	1),3),6)
			Total		15	pcs	1),3)
2	Line Defect				Serious one is no good.	-	-
3	Uneven Brightness						
4	Stain Inclusion Line shape W:width[mm] L:length[mm]	W≦0.02	L:Ignore		Ignore	pcs	7)
		W≦0.03	L≦2.0		10		
			L>2.0		0		
		W≦0.06	L≦1.0		10		
			L>1.0		0		
5	Stain Inclusion Dot shape D:average dia.[mm]	D≦0.24			Ignore	pcs	7)
		D≦0.40			5		
		D>0.40			0		
6	Scratch on polarizer Line shape W:width[mm] L:length[mm]	W≦0.01	L:Ignore		Ignore	pcs	8)
		W≦0.02	L≦40		10		
			L>40		0		
		W≦0.04	L≦20		10		
			L>20		0		
7	Scratch on polarizer Dot shape D:average dia.[mm]	D≦0.2			Ignore	pcs	8)
		D≦0.4			10		
		D>0.4			0		

No.	ITEM			MAXMUM ACCEPTABLE NUMBER		NOTE
				A-zone	UNIT	
8	Polarizer	Bubbles, Peeling in Polarizer D:average dia.(mm)	D≦0.3	Ignore	pcs	8)
			D≦0.5	10		
			D≦1.0	5		
			D>1.0	0		
9	Wrinkles on Polarizer			Serious one is no good.	-	-

Note 1) Dot Defect : Defect area > 1/2 dot
2) Sparkle mode : Brightness of dot is more than 30% at Black raster. (Visible to eye)
3) Black mode : Brightness of dot is less than 70% at white raster. (Visible to eye)
4) 1 dot : defect dot is isolated, not attached to other defect dot.
5) N dots : N defect dots are consecutive. (N means the number of defect dots.)
6) Density : Number of defect dots inside of ϕ3mm.
7) Those stains which can be wiped out easily are acceptable.
8) Polarizer area inside of B-zone is not applied.

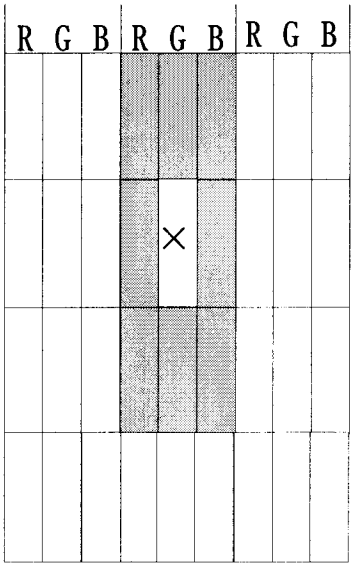

2 dots defect included defect dot 'X' is defined as follows

・ Adjacent dots to defect dot 'X' : ▢

Fig.1

10. PRECAUTIONS

Please pay attention to the followings when you use this TFT/LCD module with Back-light unit.

10.1 MOUNTING PRECAUTION

(1) You must mount Module using mounting holes arranged in 8 corners tightly.

(2) You should consider the mounting structure so that uneven force (ex. twisted stress) is not applied to Module.
And the case which Module is mounted should have sufficient strength so that external force is not transmitted directly to Module.

(3) To improve the strength of module against the mechanical shock the space between module and the case should be less than 1.0mm.

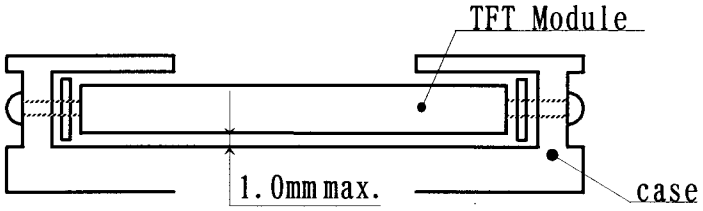

(4) You should adopt radiation structure to satisfy the temperature specification.

(5) Acetic acid type and chloline type materials for the cover case are not desiable because the former generate corrosive gas of attacking the polarizer at high temperature and the latter causes circuit break by electro-chemical reaction.

(6) Do not touch, push or rub the exposed polarizers with glass, tweezers or anything harder than HB pencil lead. And please do not rub by dustclothes with chemical treatment.
Do not touch the surface of polarizer with bare hand or greasy close. (Some cosmetics are detrimental to the polarizer.)

(7) When the surface becomes dusty, please wipe gently with absorbent cotton or other soft materials chamois soaked petrolium benzin.
Normal-Hexane is recommended for cleaning the adhesives used to attach front /rear polarizers. Do not use acetone, toluen and alcohol because they cause chemical damage to the polarizer.

(8) Wipe off saliva or water drops as soon as possible. Their long time contact with polarizer causes deformations and color fading.

(9) Do not open the case because inside circuits have not sufficient strength.

(10) Use fingerstalls of soft gloves in order to keep clean display quality, when you handle the device for incoming inspection and assembly.

(11) Do not pull or do not fold the CFL cable.

10.2 OPERATING PRECAUTION

(1) Response time depends on the temperature. (In lower temperature, it becomes longer).
And also Transmittance and Color depend on the temperature.

(2) Brightness depends on the temperature. (In lower temperature, it becomes lower).
And in lower temperature, response time (required time that brightness is stable after turn on) becomes longer.

(3) Be careful for condensation at sudden temperature change.
Condensation make damage to polarizer or electrical contact part.
And after fading condensation, smear or spot will occur.

(4) When fixed patterns are displayed at long times, afterimage is likely to occur.

(5) The Module have high frequency circuit. If you need to shield the electromagnetic noise, please do in yours.

(6) When Back-light unit is operating, it sounds.
If you need to shield the noise, please do in yours.

(7) Please connect the Back-light connector to the inverter circuit directly.
The long cable between CFL and the inverter may cause the brightness drop of CFL and may cause the rise of starting lamp Voltage(Vs).

(8) Do not connect or remove the module from main system with power applied.

10.3 ELECTROSTATIC DISCHARGE CONTROL

Since Module is composed with electronic circuit, it is not strong to electrostatic discharge. Make certain that treatment persons are connected to ground through list band etc.. Anc don't touch I/F pin directly.

10.4 PRECAUTION FOR STRONG LIGHT EXPOSURE

Strong light exposure causes degradation of polarizer and color filter.

10.5 STORAGE

When storing Module as spares for long time, the following precautions are necessary.

(1) Store them in a dark place ; do not expose then to sunlight or fluorescent light.
Keep the temperature between 5℃ and 35℃ at normal humidity.

(2) The polarizer surface should not come in contact with any other object. It is recommended that they be stored in the container in which they were shipped.

10.6 HANDLING PRECAUTIONS FOR PROTECTIVE FILM

(1) When the protective film is peeled off, static electricity is generated between the film and the polarizer.
This film should be peeled off slowly and carefully by people who are electrically grounded and with well ion-blown equipment or in such a condition, etc.

(2) The protective film is attached to the polarizer with a small amount of glue. If some stress is applied to rub the protective film against the polarizer during the time you peel off the film, the glue is apt to remain more on the polarizer. So please carefully peel off the protective film without rubbing it against the polarizer.

(3) When the Module with protective film attached is stored for long time, sometimes there remains a very small amount of glue, still on the polarizer after the protective film is peeled off.
Please refrain from storing the Module at the high temperature and high humidity for glue is apt to remain in these condition.

(4) The Glue may be taken for the Modules failure, but you can remove the Glue easily.
When the glue remains on the polarizer surface or its vestige is recognized, please wipe them off with absorbent cotton waste or other soft material like chamois soaked with Normal-hexane.

10.7 SAFETY

(1) If Module is broken, be careful to handle not to injure. (TFT/LCD and Lamp are made of glass.)
Please wash hands sufficiently when you touch the liquid crystal coming out from broken LCDs.

(2) As Back-light unit has high voltage circuit internal, do not open the case and do not insert foreign materials in the case.

(3) The LCD Modules include Cold Cathode Fluorescent Lamp(CFL).
CFL contains a small amount of mercury. Please follow local ordinances or regulations for disposal.

(4) The CFL inverter should be designed to include the function of output shutdown in case the output overcurrent happer due to any backlight trouble. The shutdown function should be assured to work in abnormal condition at the actual system.