HITACHI

FOR MESSRS : _____ DATE : Jul.13,2007

CUSTOMER'S ACCEPTANCE SPECIFICATIONS

TX31D56VM2AAA

CONTENTS

No.	ITEM	SHEET No.	PAGE
1	COVER	7B64PS 2701- TX31D56VM2AAA-4	1-1/1
2	RECORD OF REVISION	7B64PS 2702- TX31D56VM2AAA-4	2-1/4~4/4
3	GENERAL DATA	7B64PS 2703- TX31D56VM2AAA-4	3-1/1
4	ABSOLUTE MAXIMUM RATINGS	7B64PS 2704- TX31D56VM2AAA-4	4-1/2~2/2
5	ELECTRICAL CHARACTERISTICS	7B64PS 2705- TX31D56VM2AAA-4	5-1/2~2/2
6	OPTICAL CHARACTERISTICS	7B64PS 2706- TX31D56VM2AAA-4	6-1/2~2/2
7	BLOCK DIAGRAM	7B64PS 2707- TX31D56VM2AAA-4	7-1/1
8	INTERFACE PIN CONNECTION	7B64PS 2708- TX31D56VM2AAA-4	8-1/7~7/7
9	INTERFACE TIMNG	7B64PS 2709- TX31D56VM2AAA-4	9-1/3~3/3
10	DIMENSIONAL OUTLINE	7B64PS 2710- TX31D56VM2AAA-4	10-1/2~2/2
11	DESIGNATION OF LOT MARK	7B64PS 2711- TX31D56VM2AAA-4	11-1/1
12	COSMETIC SPECIFICATION	7B64PS 2712- TX31D56VM2AAA-4	12-1/3~3/3
13	PRECAUTION	7B64PS 2713- TX31D56VM2AAA-4	13-1/4~4/4

*When product will be discontinued, customer will be informed by HITACHI with twelve months prior to discontinuation.

ACCEPTED BY; _____ PROPOSED BY; Elton Liu

RECORD OF REVISION

DATE	SHEET No.	SUMMARY
Sep.29,'06	7B64PS 2703 – TX31D56VM2AAA-2 PAGE 3 – 1/1	3. GENERAL DATA Changed Weight Approximately 7400 → 740
	7B64PS 2705 – TX31D56VM2AAA-2 PAGE 5 – 2/2	5.2 BACK-LIGHT UNIT Revised

Item	Symbol	Min.	Typ.	Max.
Lamp Current	IL	(4.0)	(6.0)	(6.5)
Lamp Voltage	VL	-	(880)	-
Frequency	fL	(50)	-	(70)
Starting Lamp Voltage	VS	(1500)	-	-
		(1800)	-	-

↓

Item	Symbol	Min.	Typ.	Max.
Lamp Current	IL	4.0	6.0	6.5
Lamp Voltage	VL	-	880	-
Frequency	fL	50	-	70
Starting Lamp Voltage	VS	1500	-	-
		1800	-	-

RECORD OF REVISION

DATE	SHEET No.	SUMMARY
Sep.29,'06	7B64PS 2706 – TX31D56VM2AAA-2 PAGE 6 – 1/2	6. OPTICAL CHARCACTERISTICS Revised

Item		Symbol	Condition	Min.	Typ.	Max.
Contrast Ratio		CR	θ=0° 1)	(200)	(500)	-
Response Time	RISE	ton		-	(15)	-
	FALL	toff		-	(10)	-
Brightness of White		Bwh		-	(400)	-
Brightness Uniformity		Buni		70	-	-
Color Chromaticity (CIE)	Red	x		-	(0.63)	-
		y		-	(0.33)	-
	Green	x		-	(0.30)	-
		y		-	(0.60)	-
	Blue	x		-	(0.14)	-
		y		-	(0.08)	-
	White	x		-	(0.32)	-
		y		-	(0.33)	-
Viewing Angle (CR≧10)	x - x'	θx	φ=0°	(50)	(65)	-
		θx'	φ=180°	(50)	(65)	-
	y – y'	θy	φ=90°	(50)	(60)	-
		θy'	φ=270°	(50)	(70)	-

↓

Item		Symbol	Condition	Min.	Typ.	Max.
Contrast Ratio		CR	θ=0° 1)	200	500	-
Response Time	RISE	ton		-	15	-
	FALL	toff		-	10	-
Brightness of White		Bwh		-	400	-
Brightness Uniformity		Buni		70	-	-
Color Chromaticity (CIE)	Red	x		-	0.63	-
		y		-	0.33	-
	Green	x		-	0.30	-
		y		-	0.60	-
	Blue	x		-	0.14	-
		y		-	0.08	-
	White	x		-	0.32	-
		y		-	0.33	-
Viewing Angle (CR≧10)	x - x'	θx	φ=0°	50	65	-
		θx'	φ=180°	50	65	-
	y – y'	θy	φ=90°	50	60	-
		θy'	φ=270°	50	70	-

May.04,'07	7B64PS 2703 – TX31D56VM2AAA-3 PAGE 3 – 1/1	3. GENERAL DATA Added Color Saturation 60%(typ.) for NTSC
	7B64PS 2704 – TX31D56VM2AAA-3 PAGE 4 – 1/2	4.1 ENVIRONMENTAL ABSOLUTE MAXIMUM RATINGS Revised CFL Life time Operating 30,000h → 50,000h

RECORD OF REVISION

DATE	SHEET No.	SUMMARY
May.04,'07	7B64PS 2711 – TX31D56VM2AAA-3 PAGE 11 – 1/1	11.3 LOCATION OF LOT MARK Revised Rev. column A → B
Jul.13,'07	7B64PS 2706 – TX31D56VM2AAA-4 PAGE 6 – 1/2	6. OPTICAL CHARCACTERISTICS Revised

Item		Symbol	Condition	Min.	Typ.	Max.
Brightness of White		Bwh	θ=0° 1)	-	400	-
Color Chromaticity (CIE)	Red	x		-	0.63	-
		y		-	0.33	-
	Green	x		-	0.30	-
		y		-	0.60	-
	Blue	x		-	0.14	-
		y		-	0.08	-
	White	x		-	0.32	-
		y		-	0.33	-

↓

Item		Symbol	Condition	Min.	Typ.	Max.
Brightness of White		Bwh	θ=0° 1)	320	400	-
Color Chromaticity (CIE)	Red	x		0.58	0.63	0.68
		y		0.28	0.33	0.38
	Green	x		0.25	0.30	0.35
		y		0.55	0.60	0.65
	Blue	x		0.09	0.14	0.19
		y		0.03	0.08	0.13
	White	x		0.27	0.32	0.37
		y		0.28	0.33	0.38

RECORD OF REVISION

DATE	SHEET No.	SUMMARY
Jul.13,'07	7B64PS 2712 – TX31D56VM2AAA-4 PAGE 12 – 2/3	12.3 COSMETIC SPECIFICATIONS Revised

No	ITEM			Max. acceptable number A-zone	Unit
4	Stains, Foreign Materials Line shape W : width (mm) L : length (mm)	W≦0.02	L : Ignore	Ignore	pcs
		W≦0.03	L≦2.0	10	
			L>2.0	0	
		W≦0.06	L≦1.0	10	
			L>1.0	0	
		W>0.06	-	(See dot shape)	
5	Stains, Foreign Materials Dot shape D : ave. dia (mm)	D≦0.22		Ignore	pcs
		D≦0.33		5	
		D>0.33		0	
7	Scratch on polarizer Dot shape D : ave. dia (mm)	D≦0.2		Ignore	pcs
		D≦0.4		10	
		D>0.4		0	

↓

No	ITEM			Max. acceptable number A-zone	Unit
4	Stains, Foreign Materials Line shape W : length (mm) L : length (mm)	W≦0.06	L : Ignore	Ignore	pcs
		W>0.06	L≦1.0	Ignore	
			L>1.0	(See dot shape)	
5	Stains, Foreign Materials Dot shape D : ave. dia (mm)	D≦0.45		Ignore	pcs
		D≦0.7		5	pcs
		D>0.7		0	
7	Scratch on polarizer Dot shape D : ave. dia (mm)	D≦0.45		Ignore	
		D≦0.7		10	
		D>0.7		0	

3. GENERAL DATA

The following specifications are applied to the following TFT .
Note : Inverter for Back-Light unit is not built in this module.

Product Name	TX31D56VM2AAA	
Effective Display Area	(H)246 x (V)184.5	[mm]
Display Dots	(H)(800x3) x (V)600	
Display Pixels	(H)800 x (V)600	[pixels]
Power Supply Voltage	3.3V	
Pixel Pitch	(H)0.3075 x (V)0.3075	[mm]
Color Pixel Arrangement	R+G+B Vertical Stripe	
Display Mode	Transmissive Mode, Normally White Mode	
Color Saturation	60%(typ.) for NTSC	
Surface Polarizing Film	Glare Polarizing Film	
Viewing Direction	12 O'clock (Note 1)	
Number of Colors	16700k	[colors]
Dimensions Outline	(H)280.0 typ. x (V)210.0 typ. x (t)13.0 typ.	[mm]
Weight	Approximately 740	[g]
Interface	1ch – LVDS / Receiver (Note 2)	
Backlight	2pcs . of L – shape CCFL	

Note 1) Viewing Direction : Less inversion of gray scale.

2) LVDS : Low Voltage Differential Signaling.

4. ABSOLUTE MAXIMUM RATINGS

4.1 ENVIRONMENTAL ABSOLUTE MAXIMUM RATINGS

Item	Operating		Non-operation		Unit	Note
	Min.	Max.	Min.	Max.		
Temperature	-20	70	-30	70	℃	1),5),6)
Humidity	2)		2)		%RH	1)
Vibration	-	4.9(0.5G)	-	19.6(2G)	m/s^2	3)
Shock	-	29.4(3G)	-	490(50G)	m/s^2	4)
Corrosive Gas	Not Acceptable		Not Acceptable			
Illumination at LCD Surface	-	50,000	-	50,000	lx	
CFL Life time	50,000h (Average) (Note 7)		-		At 25℃ I_L=6mA max.	

Notes 1) "Temperature" and "Humidity" shall be measured on panel surface.
The ratings apply to every part of this module and shall not be exceeded.
The operating temperature only guarantee the display can be operated ; regarding the contrast response time, illumination and other features related to the quality are judged by Ta=25℃ condition.
Generally the illumination will down and LCD response time will becomes slower when the display operated under a lower temperature environment.

2) Ambient temp. Ta≦40℃ : 85%RH max. Without condensation.
Ta＞40℃ :Absolute humidity must be lower than the humidity of 85% at 40℃ Without condensation.

3) Frequency of the vibration shall be between 20 Hz and 50 Hz. (except resonance point)

4) Pulse width of the shock shall be 10 ms.

5) In Non-operation condition (Ta>70℃) the TFT-LCD module should be put within 96 hrs.
In Non-operation condition (Ta<-30℃) the TFT-LCD module should be put within 240 hrs and without condensation.

6) In operation condition (Ta>70℃) the TFT-LCD module should be put within 96 hrs.
In operation condition (Ta<-20℃) the TFT-LCD module should be put within 240 hrs and without condensation.

7) When brightness reached 50% of initial brightness.

4.2 ELECTRICAL ABSOLUTE MAXIMUM RATINGS

4.2.1 TFT-LCD MODULE

VSS=0V

Item	Symbol	Min.	Max.	Unit	Note
Power Supply Voltage for logic	VDD	0	4.0	V	
Input signal Voltage for logic	VI	-0.3	VDD+0.3	V	1)
Electrostatic Durability	VESD0	±100		V	2),3)
	VESD1	±8		kV	2),4)

Notes 1) The specification is applied to pixel data signal, timing signal and clock signal.
2) Discharge circuit to be connected : 200pF - 250Ω, Environmental : 25℃ - 70%RH
3) The specification is applied to I/F connector pins.
4) The specification is applied to the surface of both a metal bezel and a LCD panel.

4.2.2 BACK-LIGHT UNIT

GND=0V

Item	Symbol	Min.	Max.	Unit	Note
Lamp Current	IL	-	7.0	mArms	1)
Lamp Voltage	VL	-	2000	Vrms	2)

Notes 1) To be measured at GND terminal side
2) The specification is applied at connector pins for back-light units.

5. ELECTRICAL CHARACTERISTICS

5.1 TFT-LCD MODULE

Ta=25℃ , VSS=0V

Item		Symbol	Min.	Typ.	Max.	Unit	Note
Power Supply Voltage		VDD	3.0	3.3	3.6	V	
Differential Input Voltage for LVDS Receiver Threshold	Hi	VIH	-	-	+100	mV	1)
	Lo	VIL	-100	-	-		
Power Supply Current		IDD	-	TBD	-	A	2),3)
Vertical Frequency		fV	-	60	-	Hz	4),5)
Horizontal Frequency		fH	-	37.7	-	kHz	4)
DCLK Frequency		fCLK	-	40	-	MHz	4)

Notes 1) VCM=+1.25V

VCM is common mode voltage of LVDS transmitter / receiver.
The input terminal of LVDS transmitter is terminated with 100Ω.

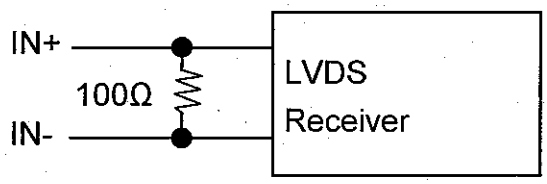

2) fV=60Hz , fCLK=40MHz , VDD=3.3V ,DC Current.
Typical value is measured when displaying vertical 256 gray scale.
Maximum is measured when displaying Vertical-stripe (Black-Gray 15).

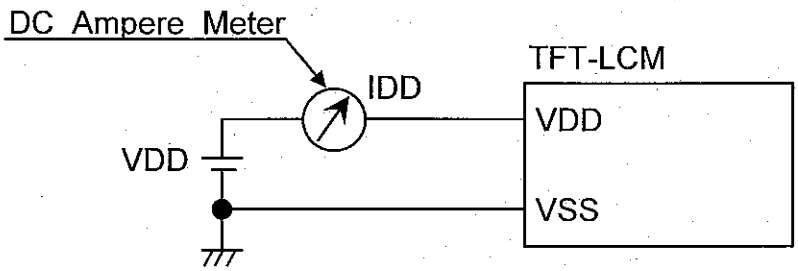

3) As this module contains 0.8A fuse, prepare current source that is enough for cutting current fuse when a truble happens. (larger than 2.0A)
4) For LVDS Transmitter Input
5) Vertical Frequency is encouraged to be used by 60Hz.
Flicker is caused by interference between inverter driving frequency and panel vertical frequency.
Please evaluate inverter frequency not to cause flicker.

5.2 BACK-LIGHT UNIT

Ta=25℃

Item	Symbol	Min.	Typ.	Max.	Unit	Note
Lamp Current	IL	4.0	6.0	6.5	mArms	1),2)
Lamp Voltage	VL	-	880	-	Vrms	7)
Frequency	fL	50	-	70	kHz	3)
Starting Lamp Voltage	VS	1500	-	-	Vrms	Ta=25℃ 4),5)
		1800	-	-		Ta= 0℃ 4),5)

Notes 1) IL is Current of GND side.

2) Higher IL cause the short life time of CFL.

3) Lamp frequency may produce interference with Hsync frequency, Causing beat or flicker on the display.

4) Starting Lamp Voltage should be more than Vs(Min).

5) Invertor open output voltage please makes the desing which 1 seconds or more can be continued at least. When it is below that, there are time when the lamp dose not light up.

6) Quality of the invertor produces big effect on illumination efficiency and life of back light. When it arranges the invertor, that back light and flicker etc. the illumination malfunction of back light does not occur, we request verification. In addition, as for verification as much as possible we recommend that it executes when it is close to the apparatus. In addition, as for the invertor, overvoltage, use you ask those which have the safe protection circuit such as the overcurrent inspection circuit and discharge corrugated inspection circuit.

7) IL=6mArms

8) Distribution difference of lamp surface temperature should be less than 5℃.

9) When the lighting wave form of the inverter is asymmentry , the inclination of mercury is generated. Therefore, please adjust the unbalance (| Ip ± Ip - | /Irms x 100%) of the lighting current ware form to 10% or less, and adjust the wave high rate (Ip + (or Ip -)/Irms) to 1.2~1.63.

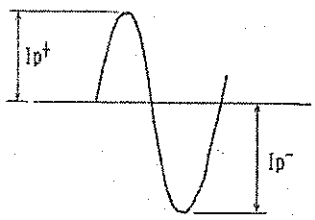

Invertor current wave form.

10) Recommendation inverter : Hitachi Lighting Ltd.
Type name : INVC783 suitable item

6. OPTICAL CHARCACTERISTICS

The following optical characteristics are measured under stable conditions. It takes about 30 minutes to reach stable conditions. The measuring point is the center of display area unless otherwise noted.

The optical characteristics should be measured in a dark room or equivalent state.

- Measuring equipment : Topcon BM-7 Pritchard 1980A, or equivalent
- Temperature = 25℃ , VDD=3.3V , fV=60Hz , IL=6.0mA

Item		Symbol	Condition	Min.	Typ.	Max.	Unit	Note
Contrast Ratio		CR	θ=0° 1)	200	500	-	-	2)
Response Time	RISE	ton		-	15	-	ms	3)
	FALL	toff		-	10	-	ms	3)
Brightness of White		Bwh		320	400	-	cd/m^2	
Brightness Uniformity		Buni		70	-	-	%	4)
Color Chromaticity (CIE)	Red	x		0.58	0.63	0.68	-	[Gray scale=255]
		y		0.28	0.33	0.38		
	Green	x		0.25	0.30	0.35		
		y		0.55	0.60	0.65		
	Blue	x		0.09	0.14	0.19		
		y		0.03	0.08	0.13		
	White	x		0.27	0.32	0.37		
		y		0.28	0.33	0.38		
Viewing Angle (CR≧10)	x - x'	θx	ϕ=0°	50	65	-	deg.	1)
		θx'	ϕ=180°	50	65	-		
	y – y'	θy	ϕ=90°	50	60	-		
		θy'	ϕ=270°	50	70	-		

Note 1) Definition of Viewing Angle

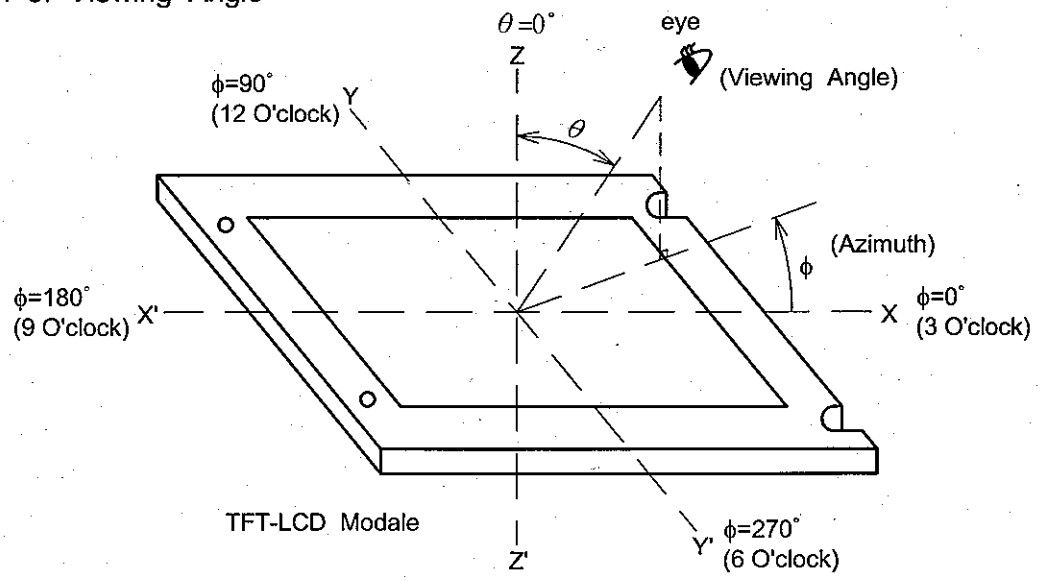

2) Definition of Contrast Ratio(CR) :

$$CR = \frac{\text{(Luminance at displaying WHITE)}}{\text{(Luminance at displaying BLACK)}}$$

3) Definition of Response Time

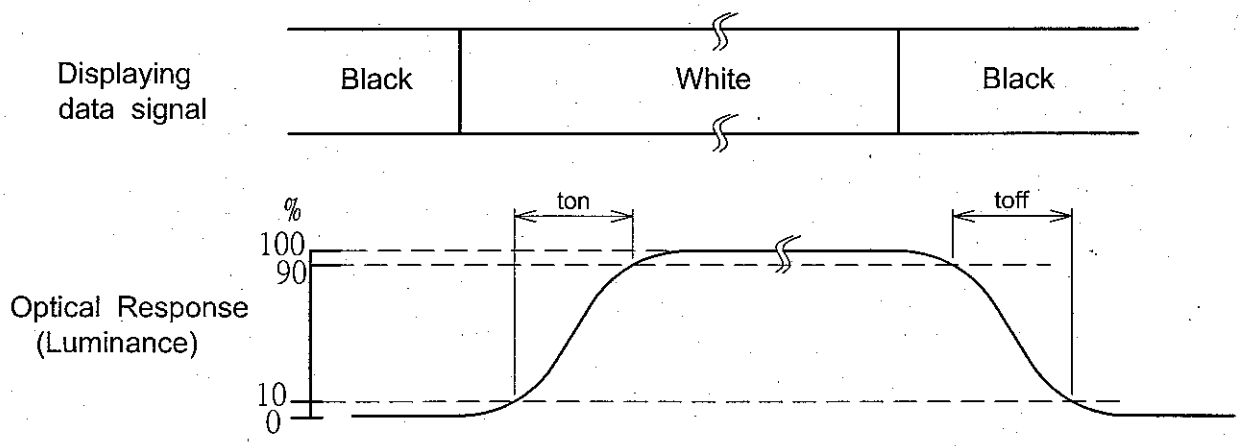

4) Definition of Birghtness Uniformity

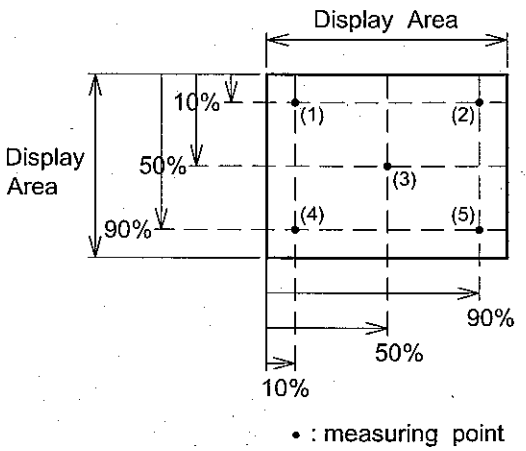

The brightness uniformity (Buni) is defined as the following equation.

$$Buni = \frac{Bmin}{Bmax} \times 100$$

where, Bmax = Maximum brightness among 5 measuring points
Bmin = Minimum brightness among 5 measuring points

7. BLOCK DIAGRAM

7.1 TFT-LCD MODULE

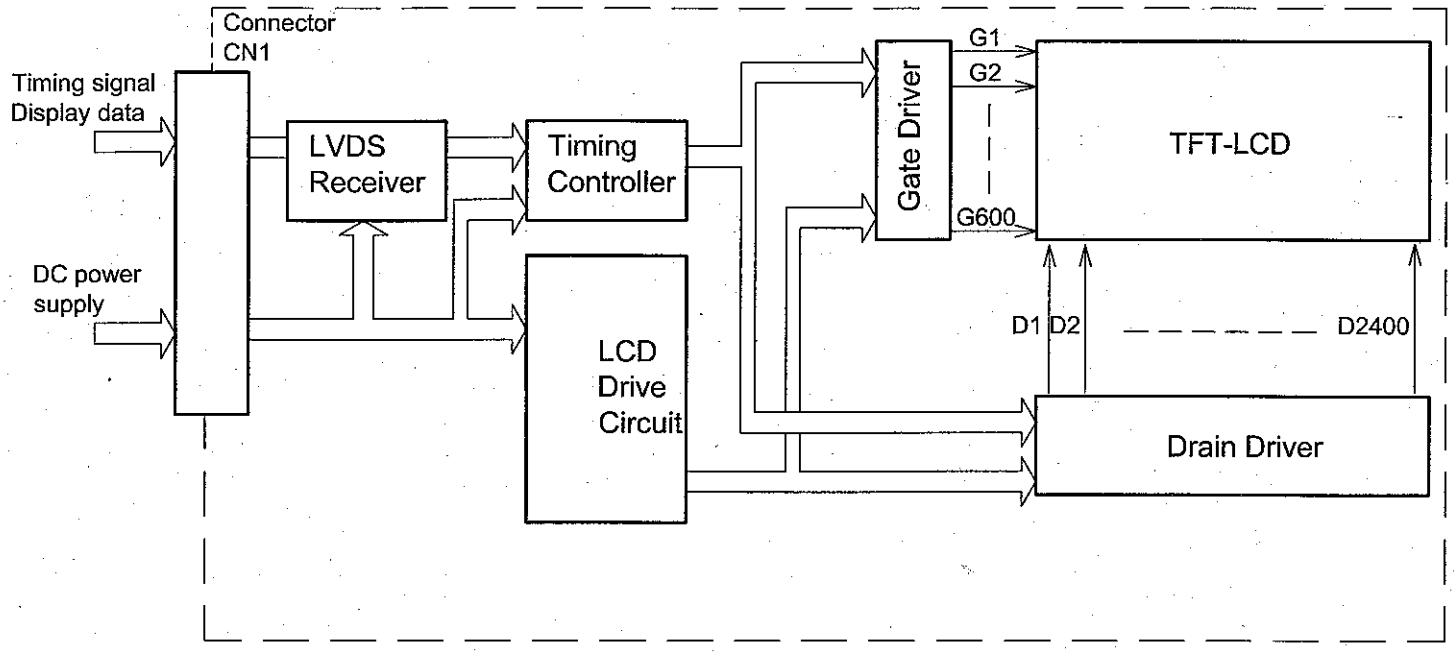

7.2 BACK-LIGHT UNIT

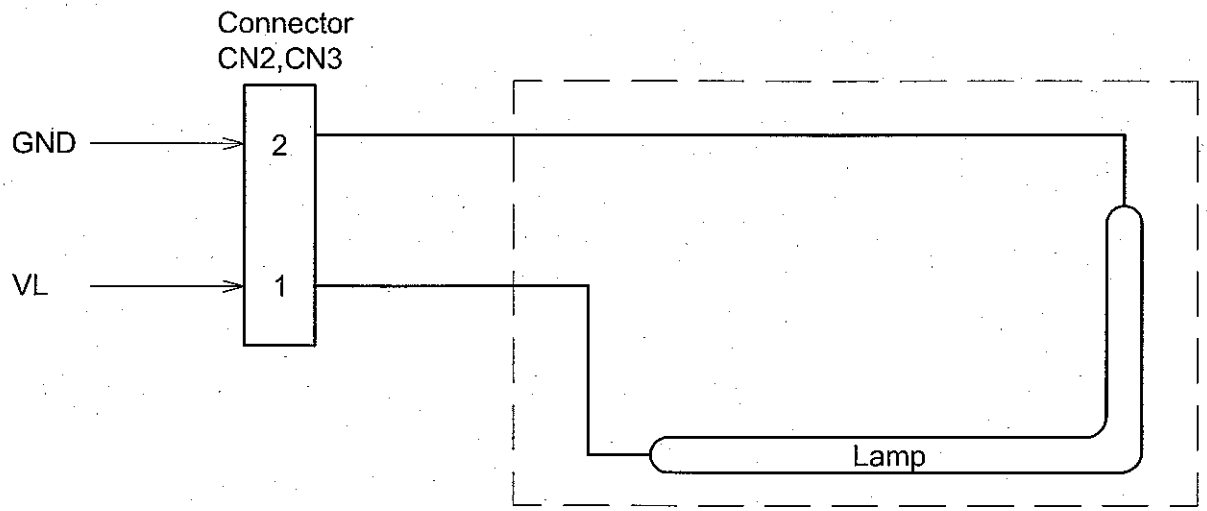

Color of wires from CCFL to CN2
1 (VL) : Pink
2 (GND) : White

Color of wires from CCFL to CN3
1 (VL) : Blue
2 (GND) : White

8. INTERFACE PIN CONNECTION

8.1 TFT-LCD MODULE

CN1 《JAE FI – SEB20P – HF13E》

Pin No.	Symbol	Description	Note
1	VDD	Power Supply (3.3V)	2)
2			
3	VSS	Ground (0V)	1)
4			
5	IN0-	Pixel Data	
6	IN0+		
7	VSS	Ground (0V)	1)
8	IN1-	Pixel Data	
9	IN1+		
10	VSS	Ground (0V)	1)
11	IN2-	Pixel Data	
12	IN2+		
13	VSS	Ground (0V)	1)
14	CLK IN-	Clock	
15	CLK IN+		
16	VSS	Ground (0V)	1)
17	IN3-	Pixel Data	
18	IN3+		
19	VSS	Ground (0V)	1)
20	MODE A	Setup of LVDS	

Notes 1) All VSS pins should be connected to GND(0V).
Metal bezel is connected internally to VSS.
2) All VDD pins should be connected to +3.3V.

8.2 BACK-LIGHT UNIT

CN2 《BHR – 02VS – 1N(JST)》

Pin No.	Symbol	Color	Description
1	VL	Pink	Power Supply for CCFL
2	GND	White	GND(0V)

CN3 《BHR – 02VS – 1N(JST)》

Pin No.	Symbol	Color	Description
1	VL	Blue	Power Supply for CCFL
2	GND	White	GND(0V)

8.3 LVDS INTERFACE

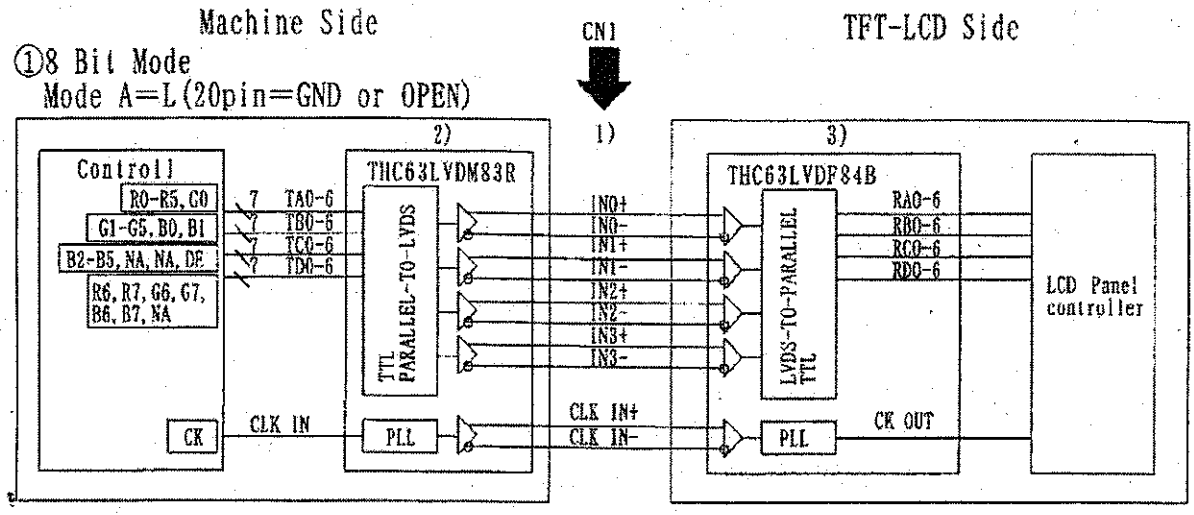

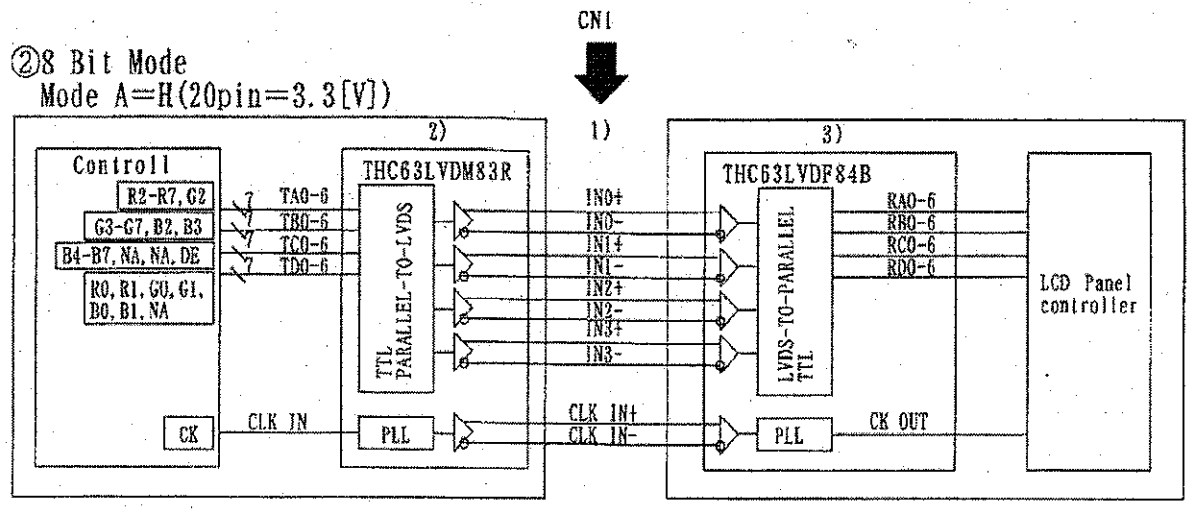

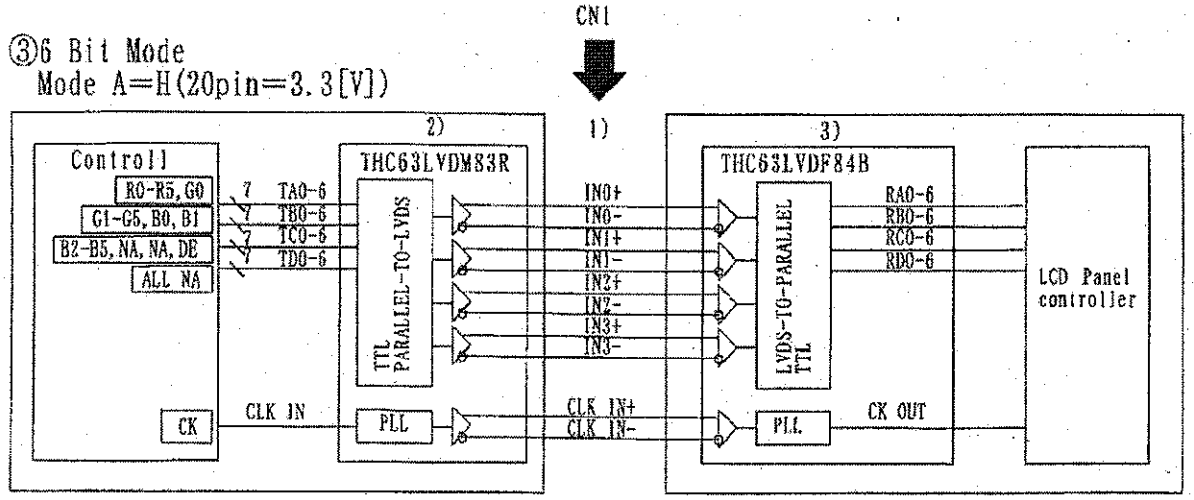

Note 1) LVDS cable impedance should be 100 ohms per signal line when each 2-lines(+,-) is used in differential mode.
2) Transmitter Made by Thine : THC63LVDM83R equivalent. Transmitter is not contained in Module.
3) Receiver : with built-in TCON IC.

8.4 DATA MAPPING

1) 8 Bit Mode

Note : Assignment in the Mode A (THC63LVDM83R)

Transmitter		20pin Mode A	
Pin No.	Data	= L(GND) or Open	=H (3.3V)
51	TA0	R0 (LSB)	R2
52	TA1	R1	R3
54	TA2	R2	R4
55	TA3	R3	R5
56	TA4	R4	R6
3	TA5	R5	R7 (MSB)
4	TA6	G0 (LSB)	G2
6	TB0	G1	G3
7	TB1	G2	G4
11	TB2	G3	G5
12	TB3	G4	G6
14	TB4	G5	G7 (MSB)
15	TB5	B0 (LSB)	B2
19	TB6	B1	B3
20	TC0	B2	B4
22	TC1	B3	B5
23	TC2	B4	B6
24	TC3	B5	B7 (MSB)
27	TC4	(NA)	(NA)
28	TC5	(NA)	(NA)
30	TC6	DE	DE
50	TD0	R6	R0 (LSB)
2	TD1	R7 (MSB)	R1
8	TD2	G6	G0 (LSB)
10	TD3	G7 (MSB)	G1
16	TD4	B6	B0 (LSB)
18	TD5	B7 (MSB)	B1
25	TD6	(NA)	(NA)

<Mode A=L or Open>

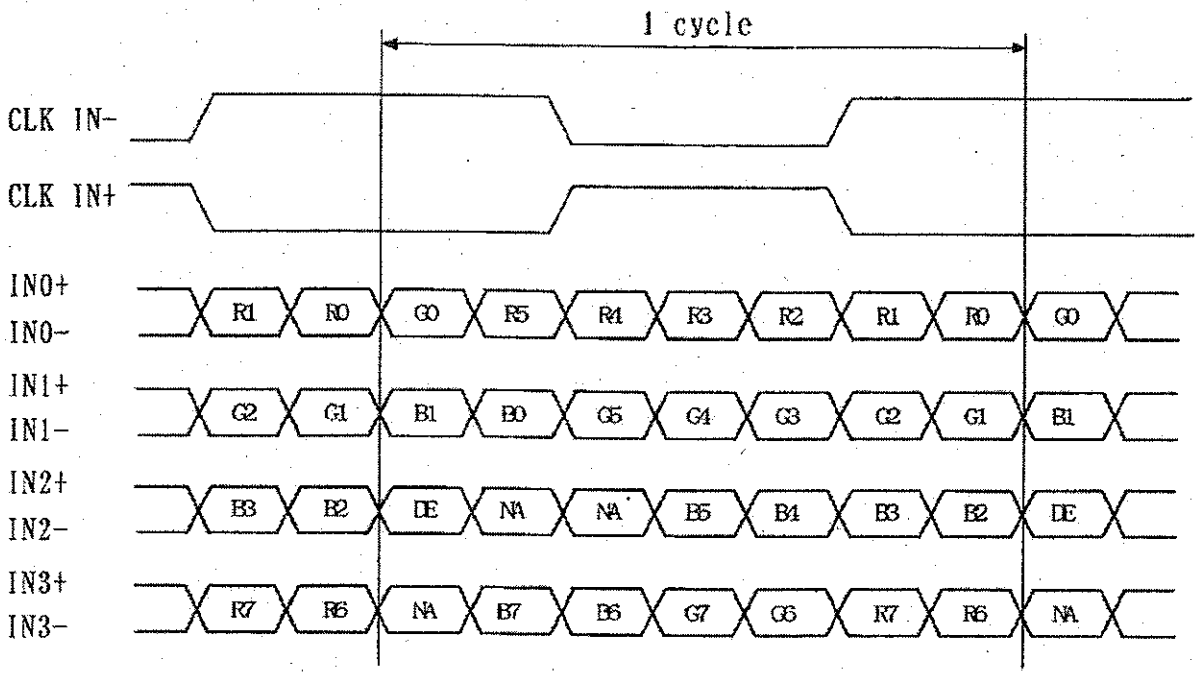

DE:Display Enable
NA:Not Available

<Mode A=H>

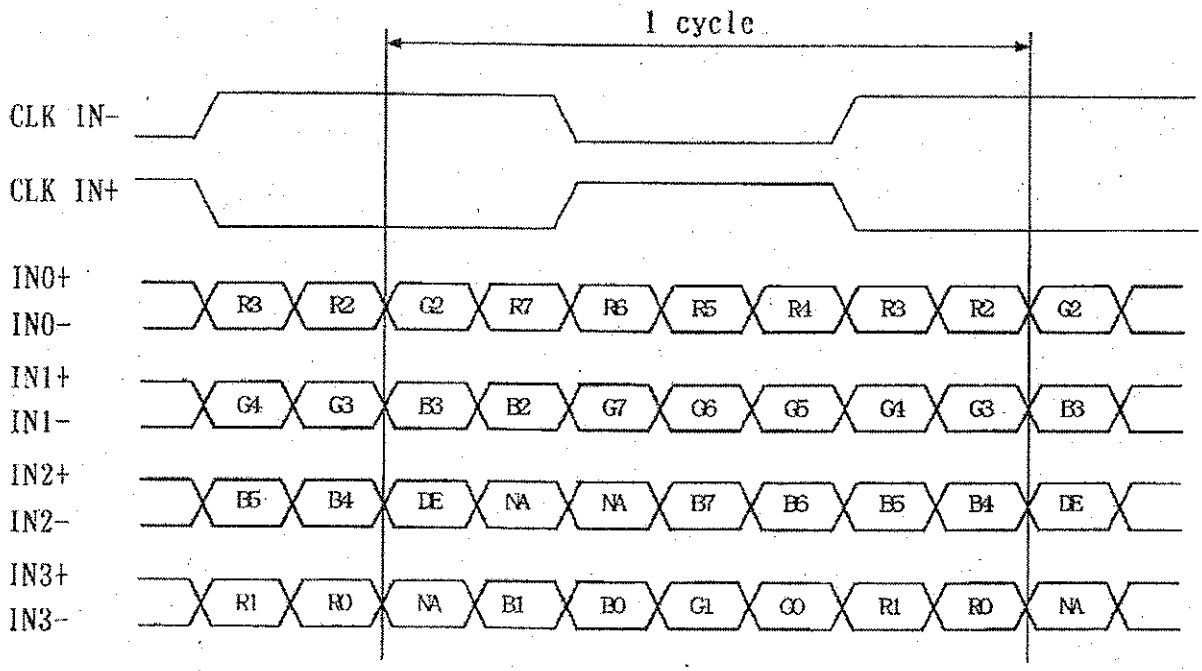

DE:Display Enable
NA:Not Available

2) 6 Bit Mode

Note : Assignment in the Mode A (THC63LVDM83R)

Transmitter		20pin Mode A	
Pin No.	Data	= L(GND) or Open	=H (3.3V)
51	TA0	-	R0 (LSB)
52	TA1	-	R1
54	TA2	-	R2
55	TA3	-	R3
56	TA4	-	R4
3	TA5	-	R5 (MSB)
4	TA6	-	G0 (LSB)
6	TB0	-	G1
7	TB1	-	G2
11	TB2		G3
12	TB3	-	G4
14	TB4	-	G5 (MSB)
15	TB5	-	B0 (LSB)
19	TB6	-	B1
20	TC0	-	B2
22	TC1	-	B3
23	TC2	-	B4
24	TC3	-	B5 (MSB)
27	TC4	-	(NA)
28	TC5	-	(NA)
30	TC6	-	DE
50	TD0	-	GND
2	TD1	-	GND
8	TD2	-	GND
10	TD3	-	GND
16	TD4	-	GND
18	TD5	-	GND
25	TD6	-	(NA)

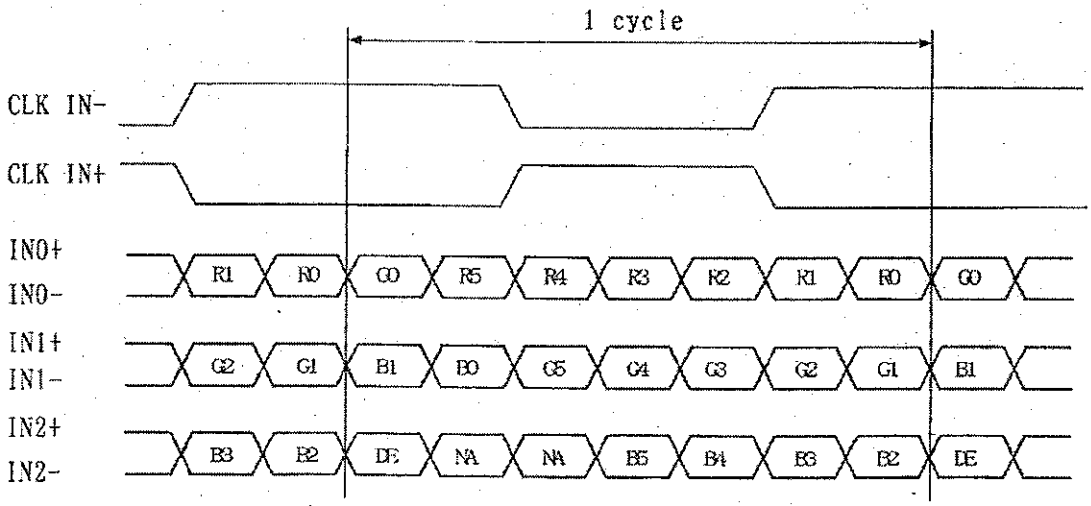

DE:Display Enable
NA:Not Available

8.5 RELATIONSHIP BETWEEN DISPLAYED COLORS AND INPUT DATA

1) 8 Bit Mode

color	Input	Red Data								Green Data								Blue Data							
		R7	R6	R5	R4	R3	R2	R1	R0	G7	G6	G5	G4	G3	G2	G1	G0	B7	B6	B5	B4	B3	B2	B1	B0
		MSB							LSB	MSB							LSB	MSB							LSB
Basic Color	Black	0	0	0	0	0	0	0	0	0	0	0	0	0	0	0	0	0	0	0	0	0	0	0	0
	Red(255)	1	1	1	1	1	1	1	1	0	0	0	0	0	0	0	0	0	0	0	0	0	0	0	0
	Green(255)	0	0	0	0	0	0	0	0	1	1	1	1	1	1	1	1	0	0	0	0	0	0	0	0
	Blue(255)	0	0	0	0	0	0	0	0	0	0	0	0	0	0	0	0	1	1	1	1	1	1	1	1
	Cyan	0	0	0	0	0	0	0	0	1	1	1	1	1	1	1	1	1	1	1	1	1	1	1	1
	Magenta	1	1	1	1	1	1	1	1	0	0	0	0	0	0	0	0	1	1	1	1	1	1	1	1
	Yellow	1	1	1	1	1	1	1	1	1	1	1	1	1	1	1	1	0	0	0	0	0	0	0	0
	White	1	1	1	1	1	1	1	1	1	1	1	1	1	1	1	1	1	1	1	1	1	1	1	1
Red	Black	0	0	0	0	0	0	0	0	0	0	0	0	0	0	0	0	0	0	0	0	0	0	0	0
	Red(1)	0	0	0	0	0	0	0	1	0	0	0	0	0	0	0	0	0	0	0	0	0	0	0	0
	Red(2)	0	0	0	0	0	0	1	0	0	0	0	0	0	0	0	0	0	0	0	0	0	0	0	0
	:	:	:	:	:	:	:	:	:	:	:	:	:	:	:	:	:	:	:	:	:	:	:	:	:
	:	:	:	:	:	:	:	:	:	:	:	:	:	:	:	:	:	:	:	:	:	:	:	:	:
	Red(253)	1	1	1	1	1	1	0	1	0	0	0	0	0	0	0	0	0	0	0	0	0	0	0	0
	Red(254)	1	1	1	1	1	1	1	0	0	0	0	0	0	0	0	0	0	0	0	0	0	0	0	0
	Red(255)	1	1	1	1	1	1	1	1	0	0	0	0	0	0	0	0	0	0	0	0	0	0	0	0
Green	Black	0	0	0	0	0	0	0	0	0	0	0	0	0	0	0	0	0	0	0	0	0	0	0	0
	Green(1)	0	0	0	0	0	0	0	0	0	0	0	0	0	0	0	1	0	0	0	0	0	0	0	0
	Green(2)	0	0	0	0	0	0	0	0	0	0	0	0	0	0	1	0	0	0	0	0	0	0	0	0
	:	:	:	:	:	:	:	:	:	:	:	:	:	:	:	:	:	:	:	:	:	:	:	:	:
	:	:	:	:	:	:	:	:	:	:	:	:	:	:	:	:	:	:	:	:	:	:	:	:	:
	Green(253)	0	0	0	0	0	0	0	0	1	1	1	1	1	1	0	1	0	0	0	0	0	0	0	0
	Green(254)	0	0	0	0	0	0	0	0	1	1	1	1	1	1	1	0	0	0	0	0	0	0	0	0
	Green(255)	0	0	0	0	0	0	0	0	1	1	1	1	1	1	1	1	0	0	0	0	0	0	0	0
Blue	Black	0	0	0	0	0	0	0	0	0	0	0	0	0	0	0	0	0	0	0	0	0	0	0	0
	Blue(1)	0	0	0	0	0	0	0	0	0	0	0	0	0	0	0	0	0	0	0	0	0	0	0	1
	Blue(2)	0	0	0	0	0	0	0	0	0	0	0	0	0	0	0	0	0	0	0	0	0	0	1	0
	:	:	:	:	:	:	:	:	:	:	:	:	:	:	:	:	:	:	:	:	:	:	:	:	:
	:	:	:	:	:	:	:	:	:	:	:	:	:	:	:	:	:	:	:	:	:	:	:	:	:
	Blue(253)	0	0	0	0	0	0	0	0	0	0	0	0	0	0	0	0	1	1	1	1	1	1	0	1
	Blue(254)	0	0	0	0	0	0	0	0	0	0	0	0	0	0	0	0	1	1	1	1	1	1	1	0
	Blue(255)	0	0	0	0	0	0	0	0	0	0	0	0	0	0	0	0	1	1	1	1	1	1	1	1

Notes 1) Definition of gray scale :

Color(n)···Number in parenthesis indicates gray scale level.
Larger number corresponds to brighter level.

2) Data Signal : 1 : High, 0 : Low

2) 6 Bit Mode

color	Input	Red Data						Green Data						Blue Data					
		R5	R4	R3	R2	R1	R0	G5	G4	G3	G2	G1	G0	B5	B4	B3	B2	B1	B0
		MSB					LSB	MSB					LSB	MSB					LSB
Basic Color	Black	0	0	0	0	0	0	0	0	0	0	0	0	0	0	0	0	0	0
	Red(63)	1	1	1	1	1	1	0	0	0	0	0	0	0	0	0	0	0	0
	Green(63)	0	0	0	0	0	0	1	1	1	1	1	1	0	0	0	0	0	0
	Blue(63)	0	0	0	0	0	0	0	0	0	0	0	0	1	1	1	1	1	1
	Cyan	0	0	0	0	0	0	1	1	1	1	1	1	1	1	1	1	1	1
	Magenta	1	1	1	1	1	1	0	0	0	0	0	0	1	1	1	1	1	1
	Yellow	1	1	1	1	1	1	1	1	1	1	1	1	0	0	0	0	0	0
	White	1	1	1	1	1	1	1	1	1	1	1	1	1	1	1	1	1	1
Red	Black	0	0	0	0	0	0	0	0	0	0	0	0	0	0	0	0	0	0
	Red(1)	0	0	0	0	0	1	0	0	0	0	0	0	0	0	0	0	0	0
	Red(2)	0	0	0	0	1	0	0	0	0	0	0	0	0	0	0	0	0	0
	:	:	:	:	:	:	:	:	:	:	:	:	:	:	:	:	:	:	:
	:	:	:	:	:	:	:	:	:	:	:	:	:	:	:	:	:	:	:
	Red(61)	1	1	1	1	0	1	0	0	0	0	0	0	0	0	0	0	0	0
	Red(62)	1	1	1	1	1	0	0	0	0	0	0	0	0	0	0	0	0	0
	Red(63)	1	1	1	1	1	1	0	0	0	0	0	0	0	0	0	0	0	0
Green	Black	0	0	0	0	0	0	0	0	0	0	0	0	0	0	0	0	0	0
	Green(1)	0	0	0	0	0	0	0	0	0	0	0	1	0	0	0	0	0	0
	Green(2)	0	0	0	0	0	0	0	0	0	0	1	0	0	0	0	0	0	0
	:	:	:	:	:	:	:	:	:	:	:	:	:	:	:	:	:	:	:
	:	:	:	:	:	:	:	:	:	:	:	:	:	:	:	:	:	:	:
	Green(61)	0	0	0	0	0	0	1	1	1	1	0	1	0	0	0	0	0	0
	Green(62)	0	0	0	0	0	0	1	1	1	1	1	0	0	0	0	0	0	0
	Green(63)	0	0	0	0	0	0	1	1	1	1	1	1	0	0	0	0	0	0
Blue	Black	0	0	0	0	0	0	0	0	0	0	0	0	0	0	0	0	0	0
	Blue(1)	0	0	0	0	0	0	0	0	0	0	0	0	0	0	0	0	0	1
	Blue(2)	0	0	0	0	0	0	0	0	0	0	0	0	0	0	0	0	1	0
	:	:	:	:	:	:	:	:	:	:	:	:	:	:	:	:	:	:	:
	:	:	:	:	:	:	:	:	:	:	:	:	:	:	:	:	:	:	:
	Blue(61)	0	0	0	0	0	0	0	0	0	0	0	0	1	1	1	1	0	1
	Blue(62)	0	0	0	0	0	0	0	0	0	0	0	0	1	1	1	1	1	0
	Blue(63)	0	0	0	0	0	0	0	0	0	0	0	0	1	1	1	1	1	1

Notes 1) Definition of gray scale :

Color(n)···Number in parenthesis indicates gray scale level.

Larger number corresponds to brighter level.

2) Data Signal : 1 : High, 0 : Low

9. INTERFACE TIMING

(1) LVDS receiver timing
(Interface of TFT module)

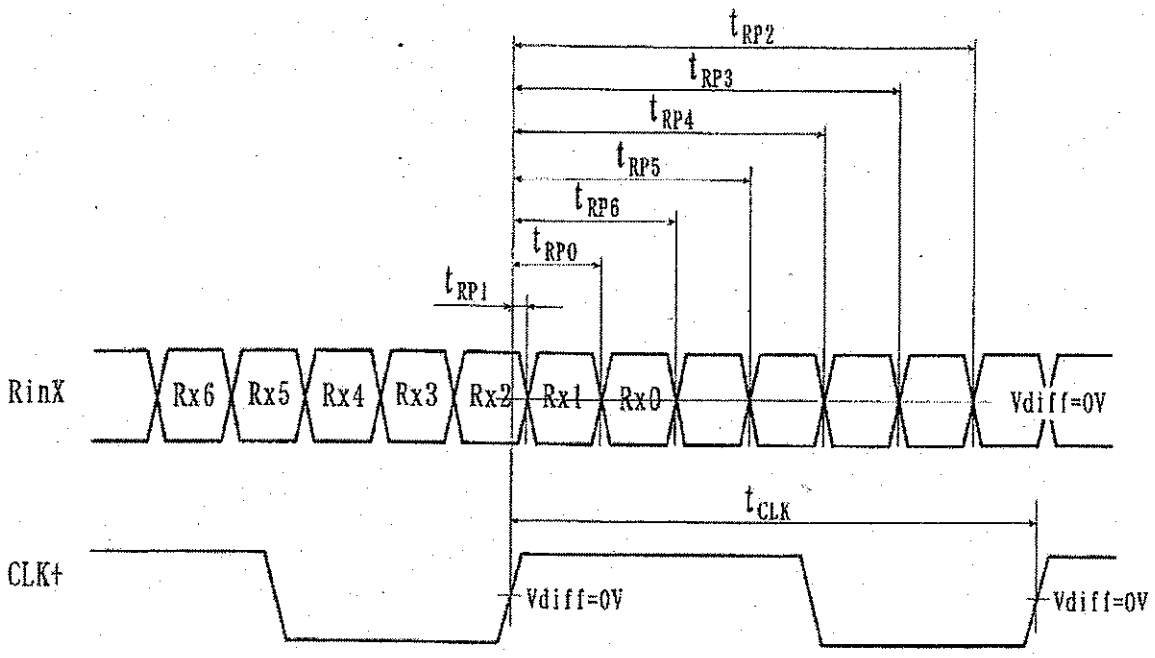

RinX=(RinX+)-(RinX-) (X=0, 1, 2)

ITEM		SIMBOL	MIN.	TYP.	MAX.	UNIT	NOTE
DCLK	FREQUENCY	$1/t_{CLK}$	35	40	45	MHz	
RinX (X=0, 1, 2)	0 data position	t_{RP0}	$\frac{1}{7}t_{CLK}-0.49$	$\frac{1}{7}t_{CLK}$	$\frac{1}{7}t_{CLK}+0.49$	ns	
	1st data position	t_{RP1}	-0.49	0	+0.49		
	2nd data position	t_{RP2}	$\frac{6}{7}t_{CLK}-0.49$	$\frac{6}{7}t_{CLK}$	$\frac{6}{7}t_{CLK}+0.49$		
	3rd data position	t_{RP3}	$\frac{5}{7}t_{CLK}-0.49$	$\frac{5}{7}t_{CLK}$	$\frac{5}{7}t_{CLK}+0.49$		
	4th data position	t_{RP4}	$\frac{4}{7}t_{CLK}-0.49$	$\frac{4}{7}t_{CLK}$	$\frac{4}{7}t_{CLK}+0.49$		
	5th data position	t_{RP5}	$\frac{3}{7}t_{CLK}-0.49$	$\frac{3}{7}t_{CLK}$	$\frac{3}{7}t_{CLK}+0.49$		
	6th data position	t_{RP6}	$\frac{2}{7}t_{CLK}-0.49$	$\frac{2}{7}t_{CLK}$	$\frac{2}{7}t_{CLK}+0.49$		

(2) Timing converter timing
(Input timing for transmitter)

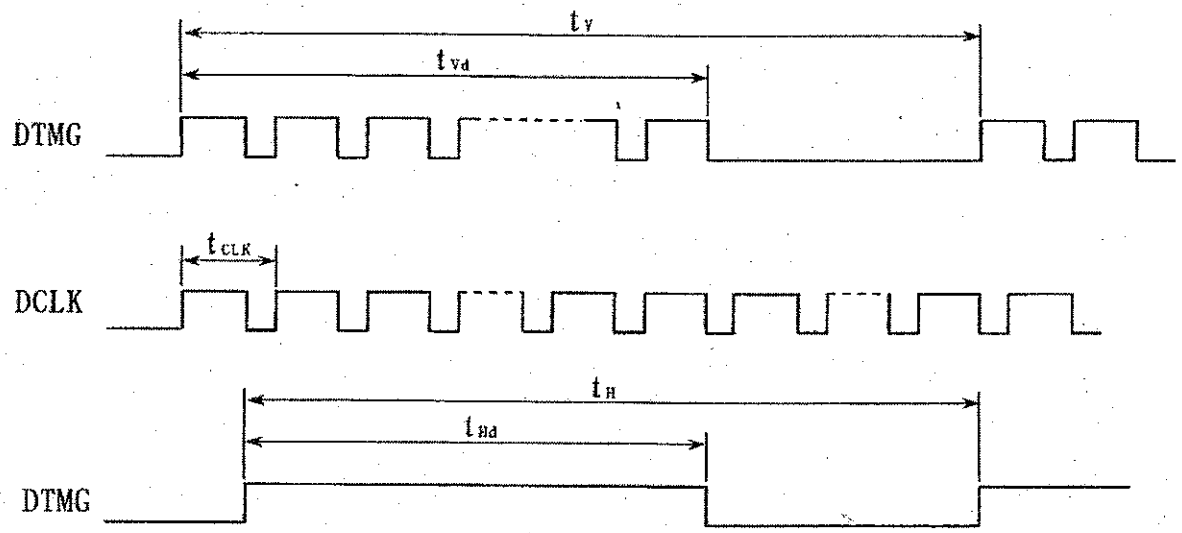

The timings except mentiond above are referd to the specifications of your transmitter.

Item		Symbol	Min.	Typ.	Max.	Unit
DCLK	Cycle time	tCLK	22.2	25.0	28.5	ns
DTMG	Line cycle time	tH	850	1060	1600	tCLK
	Line width-Active	tHd	800	800	800	
	Frame cycle time 1)	tV	602	628	1000	tH
	V width-Active	tVD	600	600	600	

Note 1) It counts by a typical value of line cycle time.

(3) TIMING BETWEEN INTERFACE SIGNAL AND POWER SUPPLY

Power Supply, Input Signal and Backlight Voltage ON/OFF/REENTRY should comply with the following sequence.

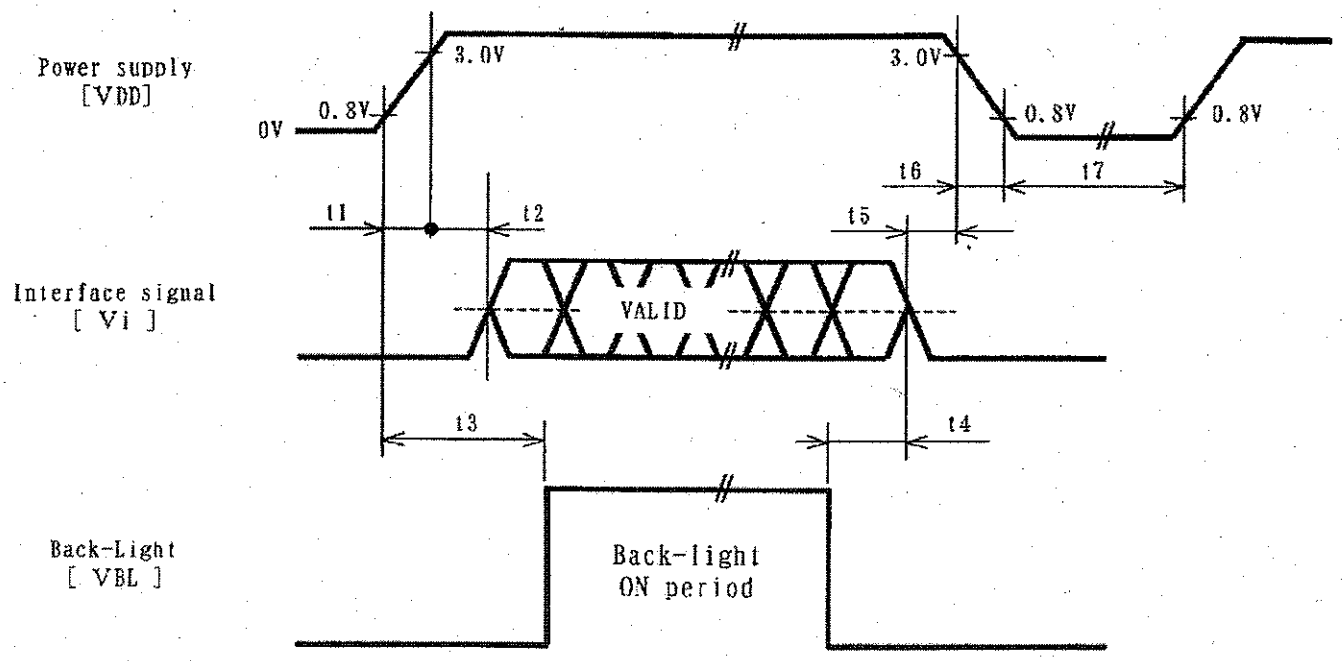

POWER ON

$0 < t1 \leqq 15ms$
$0 < t2 \leqq 45ms$
$100ms < t3$

POWER OFF

$5ms \leqq t4$
$0 \leqq t5 \leqq 45ms$
$0 \leqq t6 \leqq 20ms$
$500ms \leqq t7$

Note 1) In order to prevent electronic parts from destruction caused by latch-up, please input signal after Power Supply Voltage ON.
In addition, please turn off signals before Power Supply Voltage OFF.

2) In order to prevent from function error due to residual charge, please reenter Power Supply Voltage after time stipulated with t7.

3) Please turn on Backlight after signals fix and turn off before signals down, otherwise noise appears in the display.
The noise cause no problem with display performance in case of timing sequence comply with the spec.

10. DIMENSIONAL OUTLINE

10.1 SURFACE SIDE

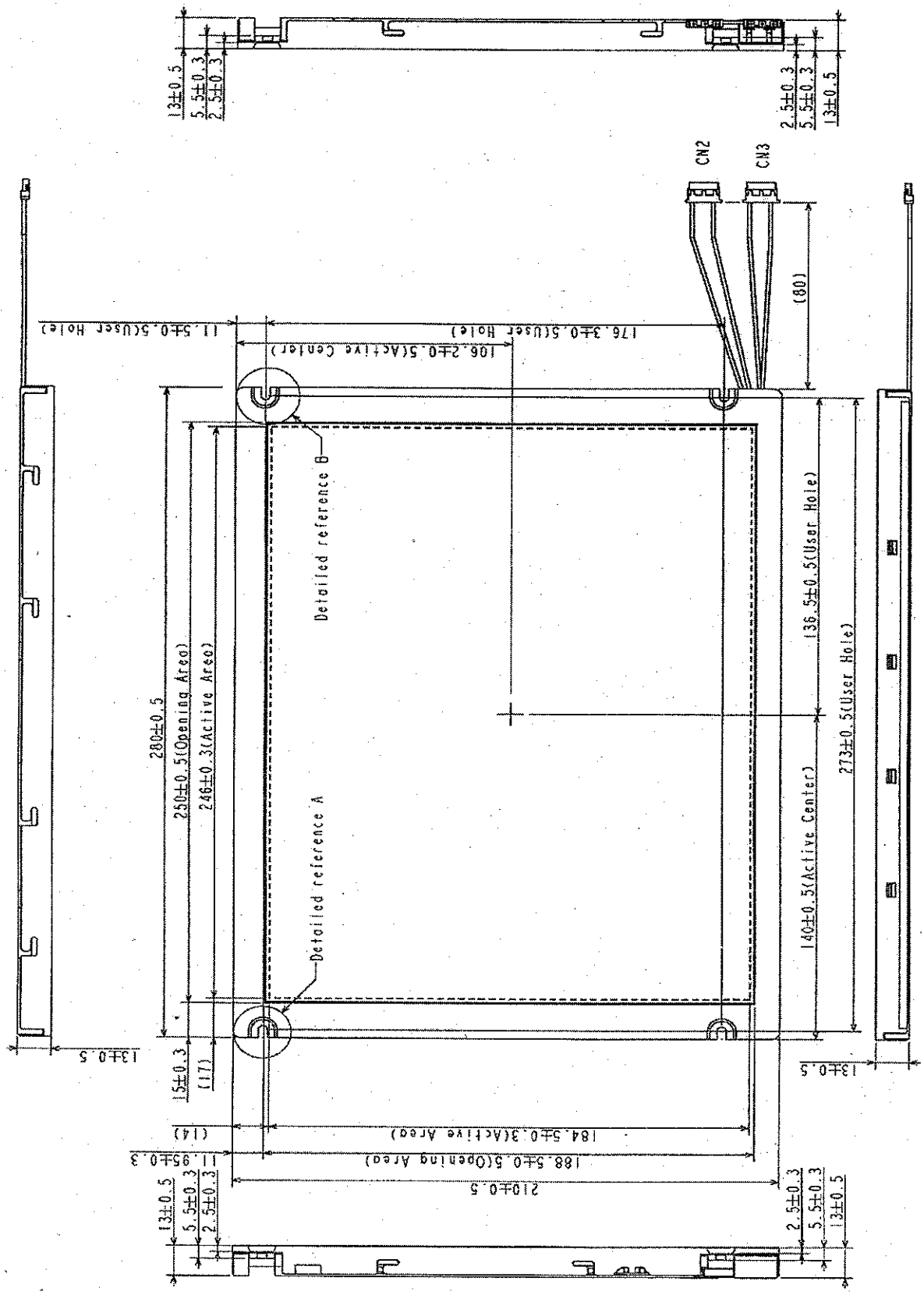

Note 1) Interface connector JAE : F1-SEB20P-HF13E or equivalent

2) CFL cable connector JST : BHR-02VS-1N

10.2 BACK SIDE

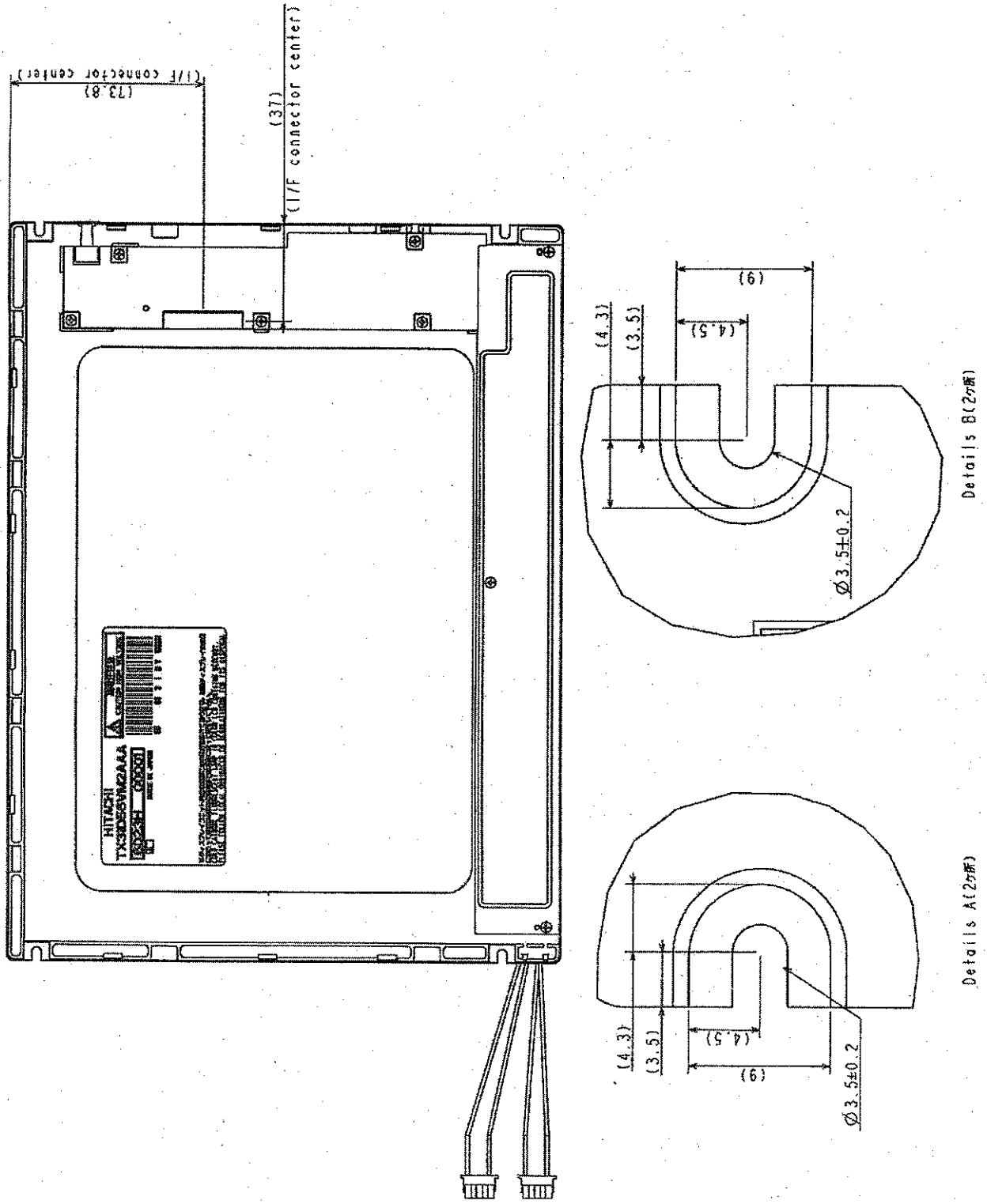

11. DESIGNATION OF LOT MARK

11.1 LOT MARK

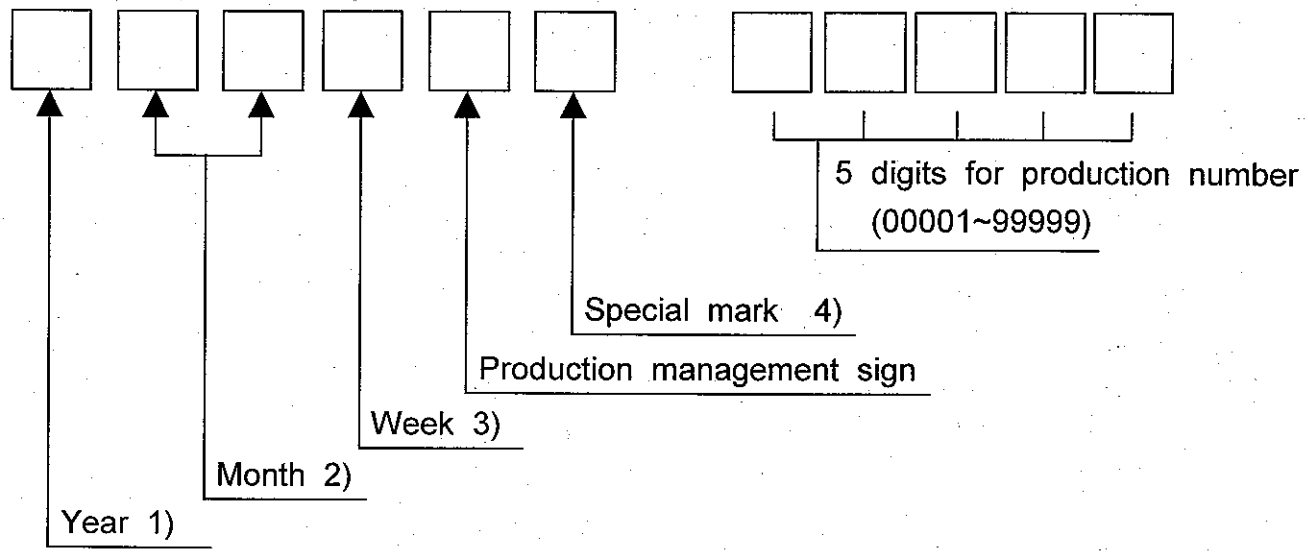

Notes

1)

Year	Mark
2007	7
2008	8
2009	9
2010	0
2011	1

2)

Month	Mark	Month	Mark
1	01	7	07
2	02	8	08
3	03	9	09
4	04	10	10
5	05	11	11
6	06	12	12

3)

Week (Days)	Mark
1~7	1
8~14	2
15~21	3
22~28	4
29~31	5

4) The special mark may be added by manufacturing accordingly to production number.

11.2 REVISION(REV.) CONTROL

REV. column is controlled by the manufacturing. A-Z except I and O is to be written on this column

11.3 LOCATION OF LOT MARK

Lot mark is printed on a label. The label is on rear side of module as shown in the drawing at Section 10.
The style of character may be changed without notice.

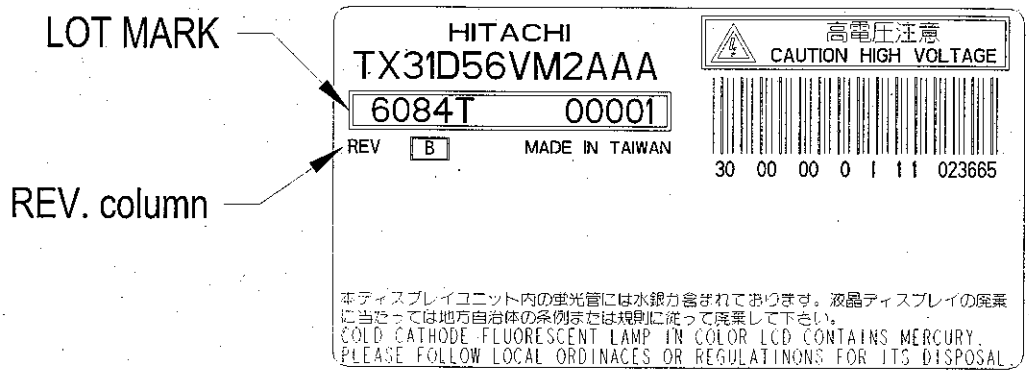

12. COSMETIC SPECIFICATIONS

12.1 CONDITION FOR COSMETIC INSPECTION

(1) Viewing zone

a) The figure shows the correspondence between eyes (of inspector) and TFT-LCD module.

$\theta \leqq 45^\circ$: when non-operating inspection

$\theta \leqq 5^\circ$: when operating inspection

b) Inspection should be executed only from front side and only A-zone.
Cosmetic of B-zone and C-zone are ignored.
(refer to 12.2 Definition of zone)

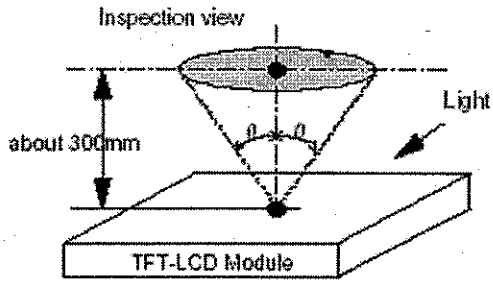

(2) Environmental

a) Temperature : 25℃
The appearance inspection at Back-light on is done at 25℃ on a TFT-LCD panel.

b) Ambient light : More than 2000 [lx] and non-directive.

c) Back-light : when non-operating inspection , Back-light should be off.

(3) Operating inspection

Operating inspection should be done with 8 color mode (without gray scale).

12.2 DEFINITION OF ZONE

A-zone : Display area (pixel area)

B-zone : Area between A-zone and C-zone

C-zone : Metallic bezel area (include I/F connector)

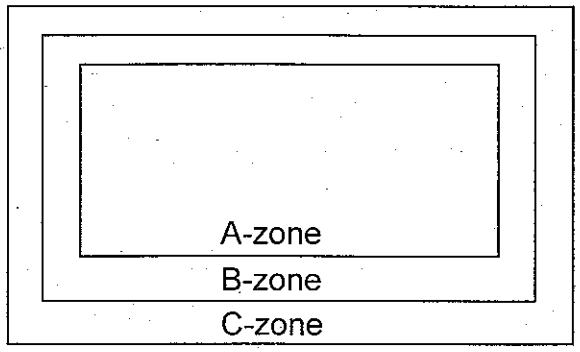

12.3 COSMETIC SPECIFICATIONS

When displaying conditions are not stable (ex. at turn on or off), the following specifications are not applied.

No	ITEM			Max. acceptable number A-zone	Unit	Note
1	Dot defect	Sparkle mode	1-dot	4	pcs	1),2),4)
			2-dots	1	Units	1),2),5)
			3-dots	0		
			4-dots	0		
			Density	2	pcs/ϕ20mm	1),2),6)
			Total	5	pcs	1),2)
		Black mode	1-dot	5	pcs	1),3),4)
			2-dots	2	Units	1),3),5)
			3-dots	0		
			4-dots	0		
			Density	3	pcs/ϕ20mm	1),3),6)
			Total	5	pcs	1),3)
			Total	10	pcs	1)
2	Line defect			Serious one is not allowed	-	-
3	Uneven brightness					
4	Stains, Foreign Materials [Line shape, W : width (mm), L : length (mm)]	W≦0.06	L : Ignore	Ignore	pcs	7)
		W>0.06	L≦1.0	Ignore		
			L>1.0	(See dot shape)		
5	Stains, Foreign Materials [Dot shape, D : ave. dia (mm)]	D≦0.45		Ignore	pcs	7)
		D≦0.7		5		
		D>0.7		0		
6	Scratch on polarizer [Line shape, W : width (mm), L : length (mm)]	W≦0.01	L : Ignore	Ignore	pcs	8)
		W≦0.02	L≦40	10		
			L>40	0		
		W≦0.04	L≦20	10		
			L>20	0		
7	Scratch on polarizer [Dot shape, D : ave. dia (mm)]	D≦0.45		Ignore	pcs	8)
		D≦0.7		10		
		D>0.7		0		

No	ITEM		Max. acceptable number A-zone	Unit	Note
8	Bubbles, peeling In polarizer [D:ave.dia(mm)]	D≦0.3	Ignore	pcs	8)
		D≦0.5	10		
		D≦1.0	5		
		D>1.0	0		
9	Not Acceptable Wrinkles on polarizer		Serious one is not allowed	-	-

Note 1) Dot defect : defect area > 1/2 dot
2) Sparkle mode : brightness of dot is more than 30% at black raster. (visible to eye)
3) Black mode : brightness of dot is less than 70% at white raster. (visible to eye)
4) 1 dot : defect dot is isolated, not attached to other defect dot.
5) N dots : N defect dots are consecutive. (N means the number of defects dots)
6) Density : number of defect dots inside 20mm ϕ.
7) Those stains which can be wiped out easily are not defects.
8) Polarizer area inside of B-zone is not applied.

13. PRECAUTION

Please pay attention to the followings when you use this TFT-LCD Module with Back-light unit.

Life support applications : HITACHI's products are not authorized for use in life support systems.

13.1 PRECAUTION TO HANDLING AND MOUNTING

(1) You should consider the mouting structure so that uneven force (ex. twisted stress) is not applied to the module.

(2) To improve the strength of module against the mechanical shock the space between the module and the case should be less than 1.0mm.

(3) Protection material in front of LCD's screen surface is recommended to protect a polarizer , LCD-glass and metal bezel. Please be note that the protection material should not touch them directry.

(4) Acetic acid type and chloline type materials for the cover case are not desiable because the former generate corrosive gas of attacking the polarizer at high temperature and the latter causes circuit break by electro-chemical reaction.

(5) Do not touch, push or rub the exposed polarizers with glass, tweezers or anything harder than HB pencil lead. And please do not rub by dustclothes with chemical treatment. Do not touch the surface of polarizer with bare hand or greasy close. (Some cosmetics are detrimental to the polarizer.)

(6) When the surface becomes dusty, please wipe gently with absorbent cotton or other soft materials chamois soaked Normal-Hexane. Normal-Hexane is recommended for clearning the adhesives used to attach front/rear polarizers. Do not use acetone, toluene and alcohol because they cause chemical damage to the polarizer.

(7) Wipe off saliva or water drops as soon as possible. Their long time contact with polarizer cuses deformations and color fading.

(8) The module should never be opened or modified.
It may cause not to operate properly.

(9) Metallic bezel of a module should not be handled with bare hand or dirty gloves. Otherwise, color of a metallic frame may become dirty during its storage.
It is recommended to use clean soft gloves and clean finger stalls when a module is handled at incoming inspection process and production (assembly) process.

(10) When you adopt a metallic shield board on backside of TFT-LCD Module, it should not be too close to TFT-LCD Module.

(11) Do not pull or do not fold the CCFL cable.

13.2 PRECAUTION TO OPERATION

(1) You should adopt radiation structure to satisfy the temperature specification.

(2) Optical response time, luminance and chromaticity depend on the temperature of a TFT-LCD module. (At lower temperature it becomes longer.)

(3) Response time and saturation time of CCFL luminance become longer at lower temperature operation.

(4) Sudden temperature change may cause dew on and/or in the a module.
Dew males damage to a polarizer and/or electrical contacting portion.
Dew causes fading of displayed quality.

(5) Fixed patterns displayed on a module for a long time may cause after-image.
It will be recovered soon.

(6) Please connect the Back-light connector to the inverter circuit directly.
The long cable between CCFL and the inverter may cause the brightness drop of CCFL and may cause the rise of starting lamp voltage(Vs).

(7) The module should not be connected or removed while a main system works.

(8) Inserting or pulling I/F connectors causes any truble when power supply and signal datas are on-state. I/F connectors should be inserted and pulled after power supply and signal datas are turned off.

13.3 ELECTROSTATIC DISCHARGE CONTROL

(1) Since a module consists of a TFT cell and electronic circuits with CMOS-ICs, which are very weak to electrostatic discharge, persons who are handling a module should be grounded through adequate methods such as a list band.
I/F connector pins should not be touched directly with bare hands.

(2) Protection film for a polarizer on a module should be slowly peeled off so that the electrostatic charge can be minimized.

13.4 PRECAUTION TO STRONG LIGHT EXPOSURE

A module should not be exposed under strong light. Otherwise, characteristics of a polarizer and color filter in a module may be degraded.

13.5 PRECAUTION TO STORAGE

When TFT-LCD Modules are stored for long time, following precautions should be taken care of :

(1) Modules should be stored in a dark place. It is prohibited to apply sunlight or fluorescent light during storage. Modules should be stored at 0 to 35℃ at normal humidity (60%RH or less).

(2) The surface of polarizers should not come in contact with any other object. It is recommended that modules should be stored in the HITACHI's shipping box.

13.6 PRECAUTION TO HANDLE PROTECTIVE FILM

(1) When the protective film is peeled off, static electricity is generated between the film and the polarizer. This film should be peeled off slowly and carefully by people who are electrically grounded and with well ion-blown equipment or in such a condition, etc.

(2) The protective film is attached to the polarizer with a small amount of glue. If some stress is applied to rub the protective film against the polarizer during the time you peel off the film, the glue is apt to remain more on the polarizer. So please carefully peel off the protective film without rubbing it against the polarizer.

(3) When the module with protective film attached is stored for long time, sometimes there remains a very small amount of glue, still on the polarizer after the protective film is peeled off. Please refrain from storing the module at the module at the high temperature and high humidity for glue is apt to remain in these condition.

(4) The glue may be taken for the modules failure, but you can remove the glue easily. When the glue remains on the polarizer surface or its vestige is recognized, please wipe them off with absorbent cotton waste or other soft material like chamois soaked with Norm-Hexane.

13.7 SAFETY

(1) If module is broken, be careful to handle not to injure. (TFT-LCD and Lamp are made of glass.) Please wash hands sufficiently when you touch the liquid crystal coming out from broken LCDs.

(2) As Back-light unit has high voltage circuit internal, do not open the case and do not insert foreign materials in the case.

(3) The CCFL inverter should be designed to include the function of output shutdown in case the output overcurrent happen due to any backlight trouble. The shutdown function should be assured to work in abnormal condition at the actual systems.

13.8 ENVIROMENTAL PROTECTION

(1) This TFT-LCD Module include Cold Cathode Fluorescent Lamp (CCFL). CCFL contains a small amount of mercury. Please follow local ordinance or regulations for disposal.

(2) Flexible circuits board, printed circuits board and solder used in a module contain small amount of lead (Pb). Please follow local ordinance or regulations for its disposal.

13.9 USE RESTRICTIONS AND LIMTATIONS

(1) This product is not authorized for use in life support devices or systems, military applications or other applications which pose a significant risk of personal injury.

(2) In no event shall HITACHI, Ltd. , be liable for any incidental, indirect or consequential damages in connection with the installation or use of this product, even if informed of the possibility thereof in advance. These limitations apply to all causes of action in the aggregate, including without limitation breach of contact, breach of warranty, negligence, strict liability, misrepresentation and other torts.

13.10 OTHERS

(1) Electrical components which may not affect electrical performance are subjective to change without notice because of their availability.