RoHS COMPLIANT

KYOCERA Display Corporation

Specification Sheet
規　格　書

Customer 客戶名稱	
Part No. 產品型號	TVL-55806GD040J-LW-G-AAN
Product type 產品內容	Mode: Transmissive Type, Negative mode, 3.97” LTPS LCD module 16.7M color
ZRoHS 綠色產品	■ Non-compliance □Compliance
Remarks 備註欄	

■Preliminary Specification　暫行規格

□Final Specification　正式規格

Signature by Customer:
客戶確認簽章:

Issued by QA	Checked by QA	Checked by PM	Approved By	
			QA	BU

KYD Confidential

RoHS
COMPLIANT

KYOCERA Display Corporation

Specification of LCD Module

Product No.: TVL-55806GD040J-LW-G-AAN

Issue date: 2013/02/21

KYD Confidential

KYOCERA Display Corporation
5-7-18 Higashinippori Arakawa-ku Tokyo Japan

TEL: +81-03-5811-8772(Direct)
FAX: +81-03-5811-8787

TABLE OF CONTENTS

1. GENERAL DESCRIPTION 4
2. FEATURES 4
3. MECHANICAL SPECIFICATION 4
4. MECHANICAL DIMENSION 5
5. MAXIMUM RATINGS 6
6. ELECTRICAL DC CHARACTERISTICS 6
7. BACKLIGHT CHARACTERISTIC 7
8. MODULE FUNCTION DESCRIPTION 8
8.1. Pin Description 8
8.2. RGB Timing Characteristics 9
8.3. Serial Interface Timing Characteristics 10
8.4. Block diagram of LCD 11
9. ELECTRO-OPTICAL CHARACTERISTICS 12
9.1. Optical characteristics 12
9.2. CIE(x, y) chromaticity 12
10. PRECAUTIONS FOR USE 15
10.1. Safety 15
10.2. Storage Conditions 15
10.3. Installing LCD Module 15
10.4. Precautions For Operation 15
10.5. Handling Precautions 16
10.6. Guarantee 16
11. FACTORY 16
12. REVISION HISTORY 16

KYD Confidential

1. GENERAL DESCRIPTION

TVL-55806GD040J-LW-G-AAN is a Color LTP LCD supplied by Kyocera Display. This main Module has a 3.97 inch diagonally measured active display area with 480 X RGB X 800 resolutions. Each pixel is divided into Red, Green and Blue sub-pixels and dots that are arranged in vertical stripes. LCD color is determined with Dithering 16.7M Color signal for each pixel. This new 3.97inch LTPS has been designed to apply the interface method that enables low power, high speed, and high contrast. This new 3.97inch LTPS is intended to support applications where thin thickness, wide viewing angle, low power are critical factors and graphic displays are important.

2. FEATURES

Display Mode	Transmissive Type, Negative mode
Display Format	RGB Vertical Stripe
Color	16.7M color
Input Data	MCU Interface：SPI 16 Bit , RGB 24Bit interface
Viewing Direction	6 O'clock (Customer Application)
Backlight	White LED
Driver IC	ILI7800

3. MECHANICAL SPECIFICATION

Item	Specifications	Unit
Dimensional outline	56.14 (W) × 95.5(H) × 1.8 (D)	mm**(Note2)**
Resolution	480 × RGB × 800	Pixel**(Note1)**
Active area	51.84 (W) × 86.4 (H)	mm
Pixel pitch	0.108 (W) × 0. 108 (H)	mm

(Note1) 1 Pixel = 3 dots = Red dot +Green dot +Blue dot

(Note2) Not include FPC

KYD Confidential

4. MECHANICAL DIMENSION

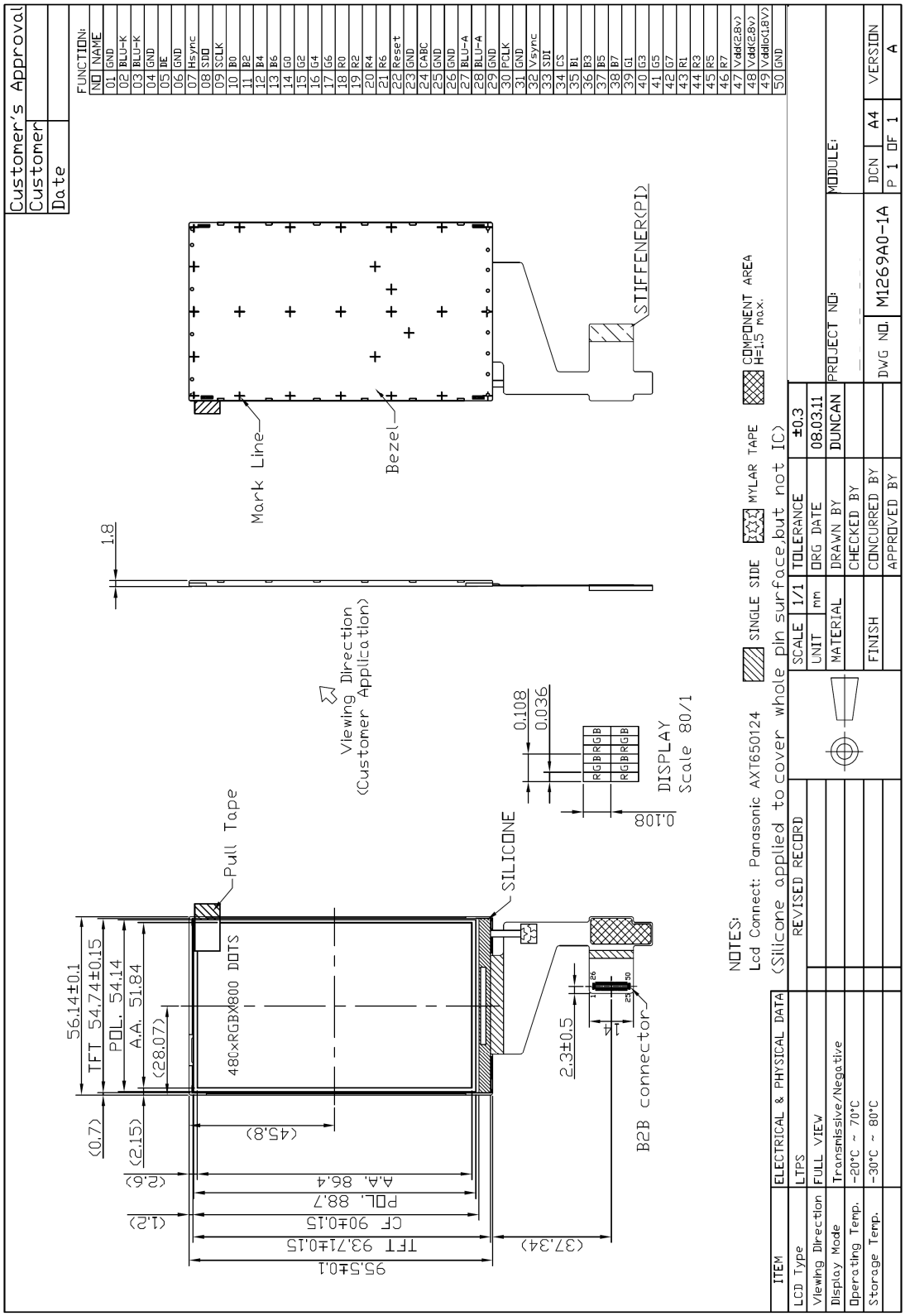

5. MAXIMUM RATINGS

If the operating condition exceeds the following absolute maximum ratings, the TFT LCD module may be damaged permanently.

Item	Symbol	Values		Unit	Condition
		Min.	Max.		
Power Supply for Analog	VLCD_2.8V (VCI)	-0.3	5.5	V	
Power Supply for Logic	VLCD_1.8V (VDDI)	-0.3	5.5	V	
Storage Temperature	TSTG	-30	80	°C	
Operating Temperature (Ambient Temperature)	TOPR	-20	70	°C	
Humidity	-	5	95	%RH	Note 1

Note1: $T_A \leqq 40℃$ Without dewing

6. ELECTRICAL DC CHARACTERISTICS

Item	Symbol	Values			Unit	Remark
		Min.	Typ.	Max.		
IC Power Voltage	VLCD_2.8V (VCI)	2.7	2.8	2.9	V	
	VLCD_1.8V (VDDI)	---	1.8	---	V	
High-level Input Voltage	V_{IH}	0.7VDDIO	---	VDDIO	V	
Low-level Input Voltage	V_{IL}	GND	---	0.3VDDIO	V	
High-level Output Voltage	V_{OH}	0.8VDDIO	---	VDDIO	V	
Low-level Output Voltage	V_{OL}	GND	---	0.2 VDDIO	V	
Current consumption	I_{DD}	---	---	45	mA	Note1

Note 1 : LCM current without backlight.

KYD Confidential

7. BACKLIGHT CHARACTERISTIC

ITEM	SYMBOL	Min	Typ	Max	Units
Surface Luminance	L_S	6400	7300	---	cd/m^2
Surface brightness uniform	L_D	85	---	---	%
LED voltage	V_{LED}	---	25.6	---	V
LED current	I_{LED}	---	---	17	mA

★ 1 Backlight LED Circuit：

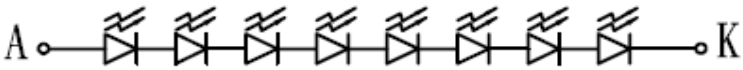

LED CIRCUIT DIAGRAM
(If=17mA)

★2 Uniform measure condition：

(a) To Measure 9 point. Measure location is show below：

(b) Uniform = (Min. brightness / Max. brightness)×100%

(c) Best Contrast, Main and sub panel all dots turn ON (White screen)

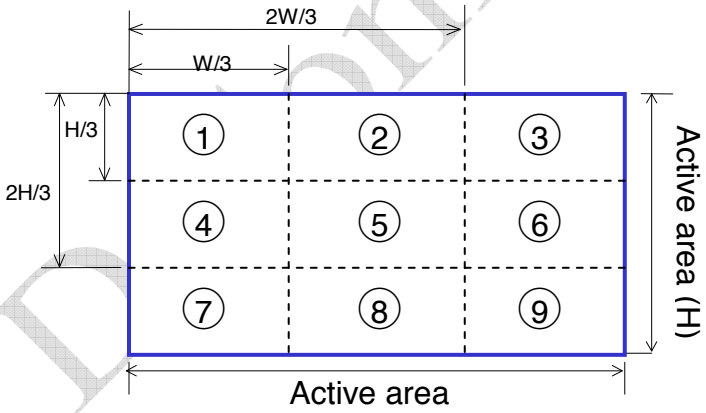

KYD Confidential

8. MODULE FUNCTION DESCRIPTION

8.1. Pin Description

NO	Pin Name	Description	NO	Pin Name	Description
1	GND	Ground	26	GND	Ground
2	BLU-K	LED (-)	27	BLU-A	LED (+)
3	BLU-K	LED (-)	28	BLU-A	LED (+)
4	GND	Ground	29	GND	Ground
5	DE	Data enable	30	PCLK	Pixel clock
6	GND	Ground	31	GND	Ground
7	Hsync	Horizontal sync signal	32	Vsync	Vertical sync signal
8	SDO	Serial data output	33	SDI	Serial data input
9	SCLK	A synchronous clock signal	34	CS	Chip select
10	B0	Data-B0	35	B1	Data-B1
11	B2	Data-B2	36	B3	Data-B3
12	B4	Data-B4	37	B5	Data-B5
13	B6	Data-B6	38	B7	Data-B7
14	G0	Data-G0	39	G1	Data-G1
15	G2	Data-G2	40	G3	Data-G3
16	G4	Data- G4	41	G5	Data-G5
17	G6	Data- G6	42	G7	Data-G7
18	R0	Data- R0	43	R1	Data-R1
19	R2	Data- R2	44	R3	Data-R3
20	R4	Data- R4	45	R5	Data-R5
21	R6	Data- R6	46	R7	Data-R7
22	Reset	Reset	47	Vdd (2.8V)	Analog Power Supply
23	GND	Ground	48	Vdd (2.8V)	Analog Power Supply
24	CABC	Backlight control	49	Vddi0 (1.8V)	Logic Power Supply
25	GND	Ground	50	GND	Ground

KYDC Confidential

8.2. RGB Timing Characteristics

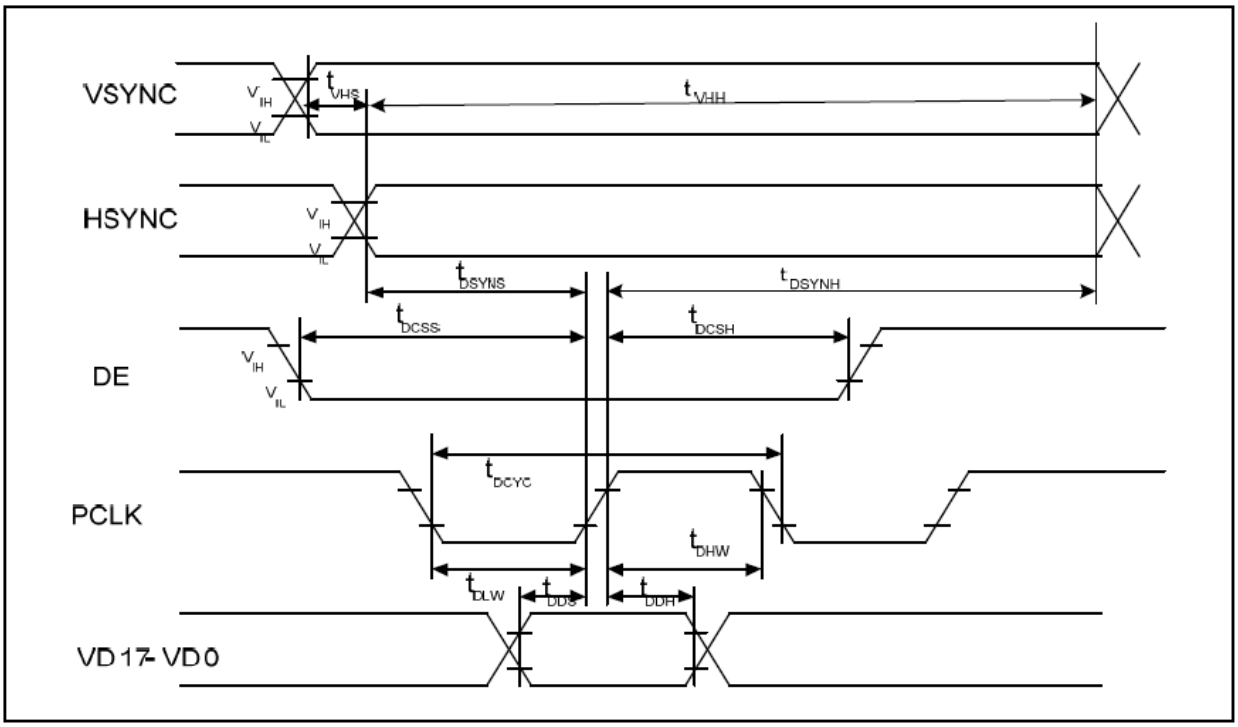

AGND=0V, VSS=0V, VCI=VCC=2.3V~4.8V, VDDI=1.65V to 3.3V, Ta = -30 to 75°C

Symbol	Parameter	Conditions	Related Pins	MIN	TYP	MAX	Unit
t_{DCYC}	PCLK cycle time	-	PCLK	28	-	-	ns
t_{DLW}	PCLK Low time			13	-	-	
t_{CHW}	PCLK High time			13	-	-	
t_{DDS}	RGB Data setup time	-	PCLK, D23-D0	5	-	-	ns
t_{DDH}	RGB Data hold time			5	-	-	
t_{DCSS}	DE setup time	-	DE	5	-	-	ns
t_{DCSH}	DE hold Time			5	-		
t_{DSYNS}	SYNC hold time	-	PCLK, HSYNC, VSYNC	5	-	-	ns
t_{VHH}	VSYNC hold time	-	PCLK, HSYNC, VSYNC	5	-	-	ns
t_{VHS}	VS leading time	-	VSYNC, HSYNC	400	-	-	ns

8.3. Serial Interface Timing Characteristics

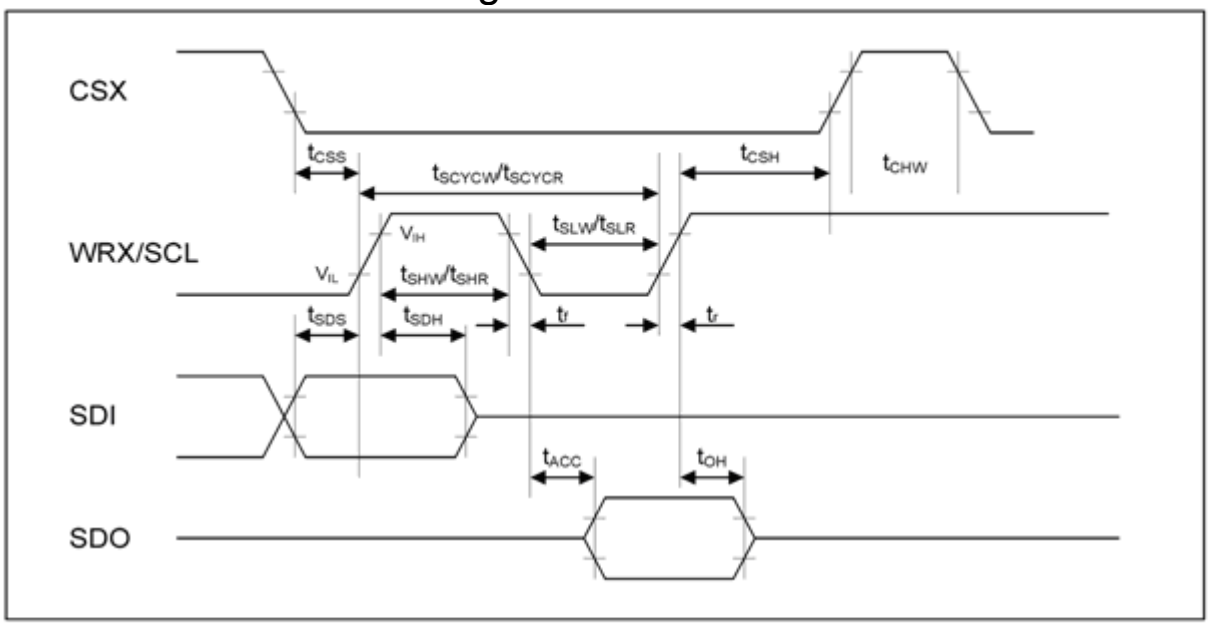

VCI =2.3 V to 4.8 V, VCC=VDDAM =1.65V to 4.8V, VDDI = 1.65 V to 3.3 V

Item	Symbol	Min.	Typ.	Max.	Unit
SCL clock cycle time Write (received)	t_{SCYCW}	100	-	20,000	ns
SCL clock cycle time Read (transmitted)	t_{SCYCR}	300	-	20,000	ns
SCL "High" pulse width Write (received)	t_{SHW}	40	-	-	ns
SCL "High" pulse width Read (transmitted)	t_{SHR}	140	-	-	ns
SCL "Low" pulse width Write (received)	t_{SLW}	40	-	-	ns
SCL "Low" pulse width Read (transmitted)	t_{SLR}	140	-	-	ns
SCL clock rise/fall time	t_r, t_f	-	-	10	ns
Chip select setup time	t_{CSS}	20	-	-	ns
Chip select hold time	t_{CSH}	50	-	-	ns
Input data setup time	t_{SDS}	20	-	-	ns
Input data hold time	t_{SDH}	20	-	-	ns
Output data access time	t_{ACC}	-	-	120	ns
Output data hold time	t_{OH}	5	-	-	ns
Chip deselect "High" pulse width	t_{CHW}	45	-	-	ns

8.4. Block diagram of LCD

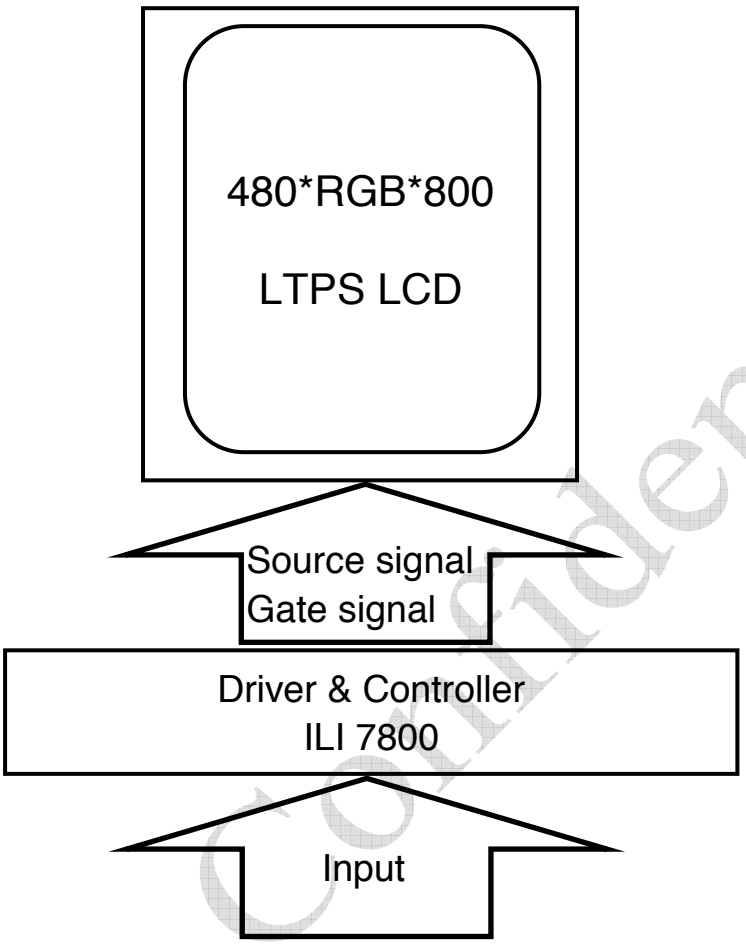

KYD Confidential

9. ELECTRO-OPTICAL CHARACTERISTICS

9.1. Optical characteristics

LED backlight transmissive module: (Normal Polarizer)

Item	Symbol	Temp.	Min.	Typ.	Max.	Unit	Conditions
Response time	Tr	25℃	--	25	--	ms	θ=0°, ϕ=0° (Note 1)
	Tf	25℃	--	10	--	ms	
Contrast ratio	CR	25℃	500	700	--	--	θ=0°, ϕ=0° LED:ON,LIGHT:OFF (Note 3)
Uniformity	--	--	80	--	--	%	--
Luminance of White	--	--	300	--	--	Cd/㎡	I_{LED}=17mA/LED
Visual angle range front and rear	θf	25℃	80			Degree	ϕ=0°,CR≧10 LED:ON, LIGHT:OFF (Note 2)
	θb	25℃	80				
Visual angle range left and right	θl	25℃	80			Degree	ϕ=90°,CR≧10 LED:ON, LIGHT:OFF (Note 2)
	θr	25℃	80				
Visual angle direction priority	--	--	6”				Customer Application

9.2. CIE(x, y) chromaticity

Item	Symbol	Transmissive			Conditions
		Min.	Typ.	Max.	
Red	X	(0.60)	(0.64)	(0.68)	0θ=0°, ϕ=0° BM-5A 1° angle
	y	(0.29)	(0.33)	(0.37)	
Green	X	(0.30)	(0.34)	(0.38)	
	y	(0.51)	(0.55)	(0.59)	
Blue	X	(0.10)	(0.14)	(0.18)	
	y	(0.01)	(0.05)	(0.09)	
White	X	(0.26)	(0.30)	(0.34)	
	y	(0.27)	(0.31)	(0.35)	
NTSC	%	70% (Typ)			

● FOR LCM

KYD Confidential

NOTE 1: Response time definition

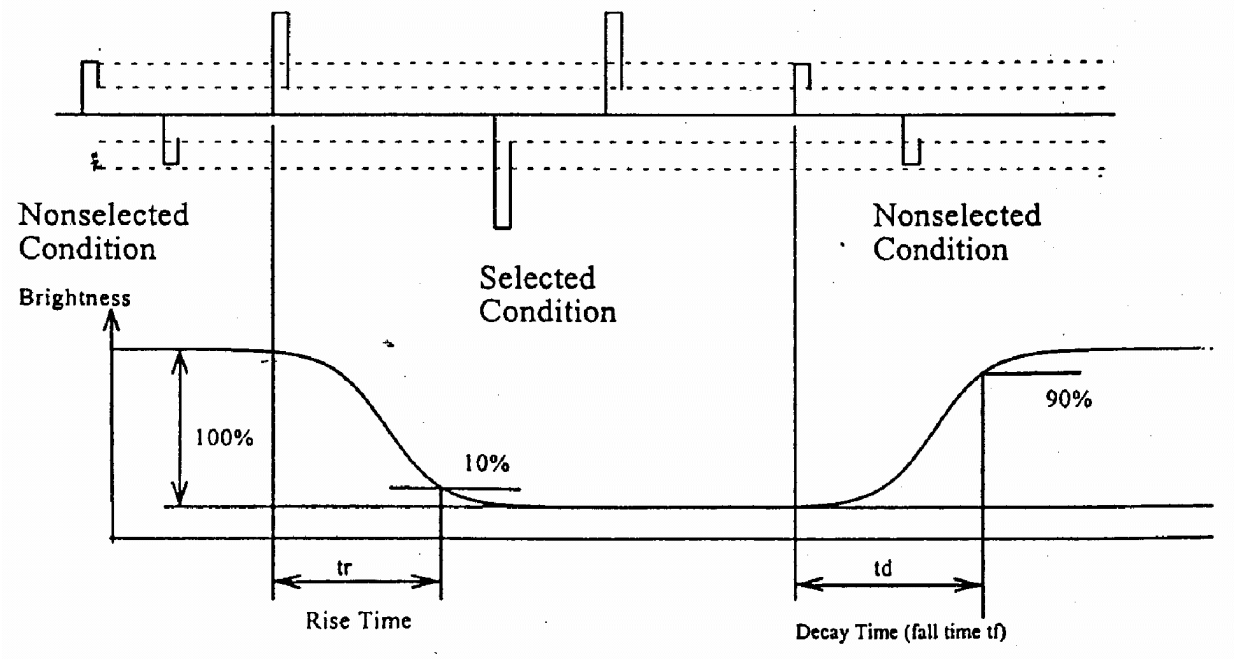

NOTE 2 : ϕ 、θ definition

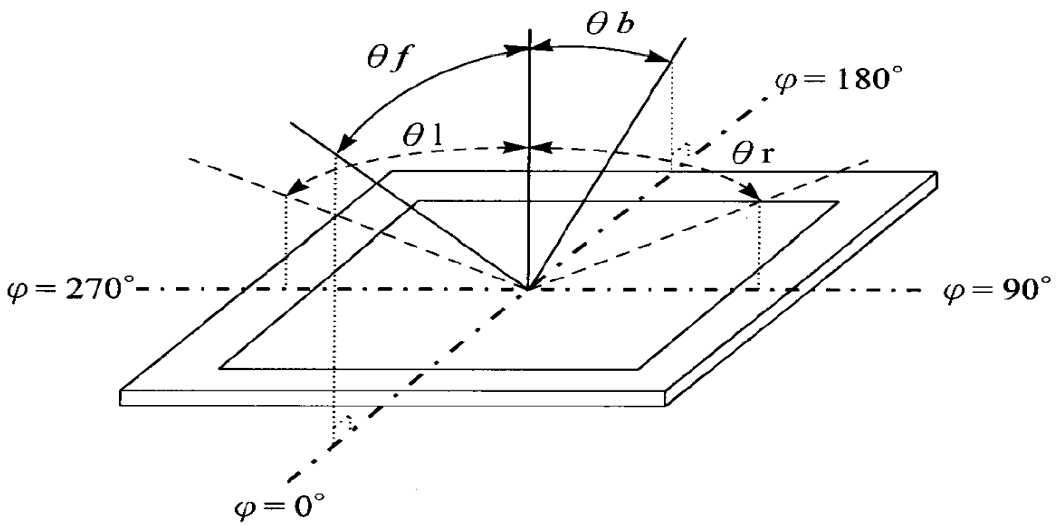

NOTE 3: Contrast Definition

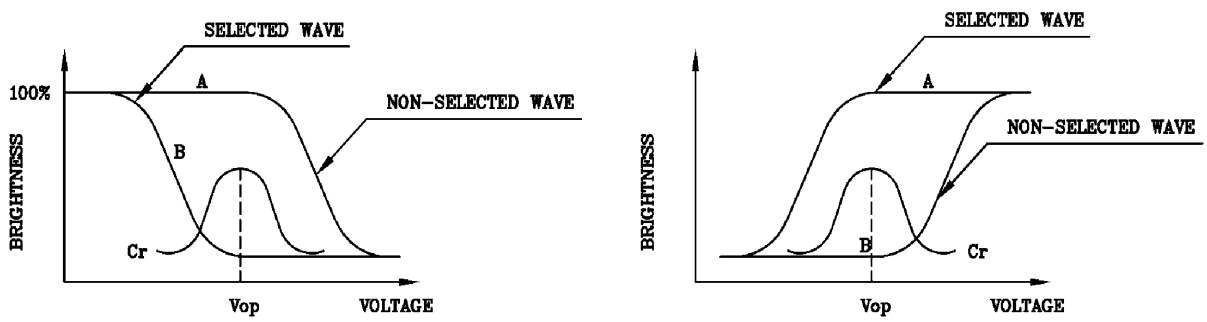

(positive type) (negative type)

Contrast Ratio : Cr=A/B

KYD Confi

10. PRECAUTIONS FOR USE

10.1. Safety

(1) Do not swallow any liquid crystal, even if there is no proof that liquid crystal is poisonous.
(2) If the LCD panel breaks, be careful not to get liquid crystal to touch your skin.
(3) If skin is exposed to liquid crystal, wash the area thoroughly with alcohol or soap.

10.2. Storage Conditions

(1) Store the panel or module in a dark place where the temperature is 23±5°C and the humidity is below 50±20%RH.
(2) Store in anti-static electricity container.
(3) Store in clean environment, free from dust, active gas, and solvent.
(4) Do not place the module near organics solvents or corrosive gases.
(5) Do not crush, shake, or jolt the module.
(6) Do not exposed to direct sun light of fluorescent lamps.

10.3. Installing LCD Module

Attend to the following items when installing the LCM.
(1) Cover the surface with a transparent protective plate or touch panel to protect the polarizer and LC cell.

10.4. Precautions For Operation

(1) Viewing angle varies with the change of liquid crystal driving voltage (Vo). Adjust Vo to show the best contrast.
(2) Driving the LCD in the voltage above the limit will shorten its lifetime.
(3) Response time is greatly delayed at temperature below the operating temperature range. However, this does not mean the LCD will be out of the order. It will recover when it returns to the specified temperature range.
(4) When turning the power on, input each signal after the positive/negative voltage becomes stable.
(5) Do not apply mater or any liquid on product, which composed of T/P.

KYD Confidential

10.5. Handling Precautions

(1) Avoid static electricity that can damage the CMOS LSI; please wear the wrist strap when handling.
(2) The polarizing plate of the display is very fragile. So, please handle it very carefully.
(3) Do not give external shock.
(4) Do not apply excessive force on the surface; it may cause display abnormal.
(5) Do not wipe the polarizing plate with a dry cloth, as it may easily scratch the surface of plate.
(6) Do not use ketonics solvent & Aromatic solvent, use with a soft cloth soaked with a cleaning naphtha solvent.
(7) Do not operate it above the absolute maximum rating.
(8) Do not remove the panel or frame from the module.
(9) Do not apply mater or any liquid on product, which composed of T/P.

10.6. Guarantee

10.6.1. The period is within 12 months since the date of shipping out under normal using and storage conditions.

10.6.2. Any defect not caused by Kyocera Display is not guaranteed to the customer. The defect phenomenon should be agreed by both parties.

11. FACTORY

(TBD)

12. REVISION HISTORY

Version	Revise record	Date

KYD Confidential