SPECIFICATION
FOR
APPROVAL

(●) Preliminary Specification
( ) Final Specification

Title	4.3inch (800 × RGB × 480) TFT-LCD

BUYER	
MODEL	

SUPPLIER	LG.Philips LCD Co., Ltd.
MODEL	LB043WV1
SUFFIX	TD01

SIGNATURE	DATE
/	
/	
/	

APPROVED BY	DATE
REVIEWED BY	
PREPARED BY	

Product Engineering Dept.
LG. Philips LCD Co., Ltd

Product Specification

CONTENTS

Product Specification

RECORD OF REVISIONS

Revision No.	Revision Date	Page	Summary
0.1	Oct. 23, 2007	-	-

Product Specification

1. General Description

The LB043WV1-TD01 is a Color Active Matrix Liquid Crystal Display with Light Emission Diode(LED) backlight system. The matrix employs poly-Si Thin Film Transistor as the active element.
It is transmissive type display operating in the normally White mode. This TFT-LCD has 4.3 inchs diagonally measured active display area with WVGA(800×RGBx480) resolution. Each pixel is divided into Red, Green and Blue sub-pixels or dots which are arranged in vertical stripes.

Block Diagram

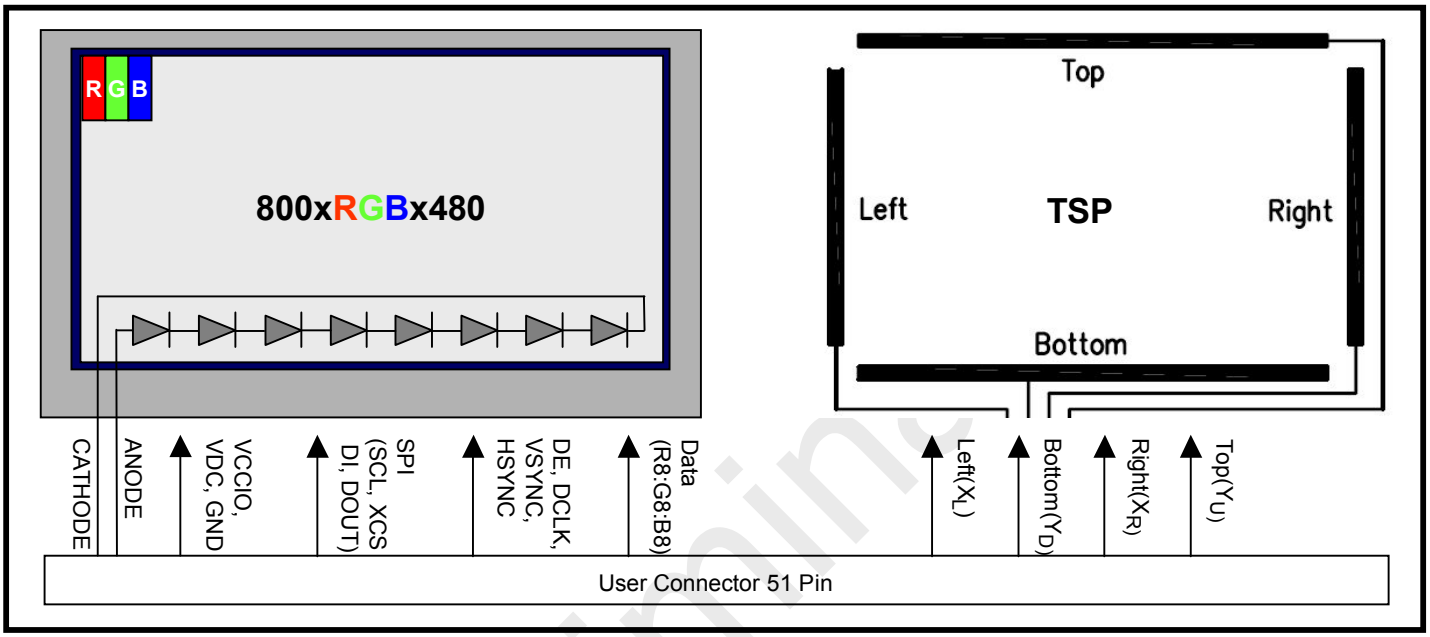

Fig 1.1. Block Diagram

General Features

Active screen size	4.3 inches (109.1 mm) diagonal
Outline Dimension	106.00(H) × 69.80(V) × 4.0(D) mm (Typ.) (With TSP)
Pixel Pitch	39.0 (H) × 117.0 (V) um
Pixel format	800(H) × 480(V) (RGB Stripe)
Color depth	24-bits (8R, 8G, 8B used)
Interface	8-bit/16-bit selectable CPU bus
Brightness	420 cd/㎡ (With TSP, 8LEDs)
Contrast Ratio	400:1 (Typ.)
Viewing Angle	60/50/70/70 deg (U/D/L/R @ CR>10)
Viewing Direction	12 o'clock (Color Inversion Direction)
Response Time	25 msec (Tr + Tf)
Weight	65g (T.B.D)
Surface treatment	Anti-Glare Treatment(T.B.D)
LCD Driver	uPD161837 (Source, Power)

2. Absolute Maximum Ratings

The following are maximum values which, if exceeded, may cause faulty operation or damage to the unit.

Table 2.1. ABSOLUTE MAXIMUM RATINGS

Parameter	Symbol	Values		Units	Notes
		Min.	Max		
Power Supply for Interface(I/O)	V_{CCIO}	-0.3	3.7	V	
Power Supply for Analog and Logic	V_{DC}	-0.3	3.7	V	
LED Forward Current	I_{LED}		30	mA	1
Operating Temperature	T_{OP}	-20	70	°C	2
Storage Temperature	T_{STG}	-30	80	°C	3
Humidity	H	5	90	RH	2

Notes:
1. Applies for each LED individually
2. Temp. ≤ 60℃ , 90% RH MAX. 96hr, Non-condensation
3. Absolute humidity shall be less than 80% RH at 70℃, 24hr

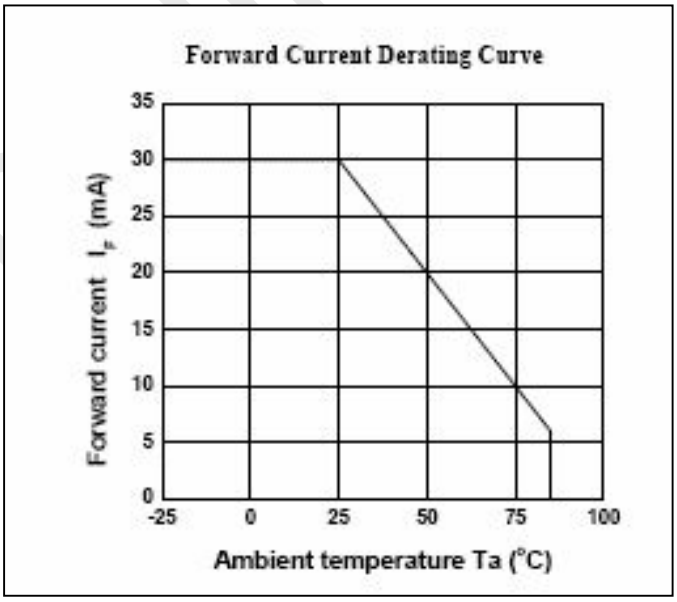

Fig 2.1. Ambient Temperature vs. Allowable Forward Current

3. Electrical Specifications

3-1. Electrical Characteristics

Table 3.1. ELECTRICAL CHARACTERISTICS $(T_a = 25^\circ C)$

Parameter	Symbol	Value			Unit	Notes
		Min.	Typ.	Max.		
Interface power supply voltage	VCCIO	1.65	3.0	3.3	V	
Analog power supply voltage	VDC	2.8	3.0	3.3	V	
High level Input voltage	VIH	0.8 VCCIO			V	
Low level input voltage	VIL			0.2 VCCIO	V	
Power consumption (LCD panel + Driver IC)	PLCD		30		mA	1

Notes:
1. The power consumption is measured at the test pattern (middle gray)

3-2. Back Light Unit of LCD

The edge-lighting type of back light unit consists of 8 LEDs which is connected in Serial.

Table 3.2. LED Forward Electrical CHARACTERISTICS $(T_a = 25^\circ C)$

Parameter	Symbol	Value			Unit	Remark
		Min.	Typ.	Max.		
LED current	I_{LED}	-	20	-	mA	# of LEDs: 8ea
Power Consumption	P_{LED}	-	520	-	mW	

3-3. Touch Screen Panel

Table 3.3. TSP CHARACTERISTICS $(T_a = 25^\circ C)$

PARAMETER	MIN.	TYP.	MAX.	UNIT	REMARK
Linearity	1.5	-	1.5	%	Analog X & Y Directions
Terminal Resistance	200	-	900	Ω	X-axis
	200	-	900	Ω	Y-axis
Insulation Resistance	25	-	-	MΩ	DC 25V
Voltage	-	-	7	V	DC
Chattering	-	-	10	ms	
Transparency	-	80	-	%	

3. Electrical Specifications

3-4. Interface Connections

The pin connections are provided in Table 3. The mating connector for the flex tail is HIROSE FH23-51S-03SH or equivalent.

Table 3.3. PIN DESCRIPTION

Pin No.	Description	I/O	Remark
1	LED+	I	Anode of LED
2	LED-	I	Cathode of LED
3	GND		
4	GND		
5	DR7	I	Red data (MSB)
6	DR6	I	Red data
7	DR5	I	Red data
8	DR4	I	Red data
9	DR3	I	Red data
10	DR2	I	Red data
11	DR1	I	Red data
12	DR0	I	Red data (LSB)
13	GND		
14	DG7	I	Green data (MSB)
15	DG6	I	Green data
16	DG5	I	Green data
17	DG4	I	Green data
18	DG3	I	Green data
19	DG2	I	Green data
20	DG1	I	Green data
21	DG0	I	Green data (LSB)
22	GND		
23	DB7	I	Blue data (MSB)
24	DB6	I	Blue data
25	DB5	I	Blue data
26	DB4	I	Blue data
27	DB3	I	Blue data (MSB)
28	DB2	I	Blue data
29	DB1	I	Blue data
30	DB0	I	Blue data
31	GND		
32	DE	I	Data enable
33	GND		
34	MCLK	I	Pixel clock
35	GND		
36	HSYNC	I	Horizontal sync
37	VSYNC	I	Vertical sync
38	GND		

3. Electrical Specifications

3-4. Interface Connections

The pin connections are provided in Table 3. The mating connector for the flex tail is HIROSE FH23-51S-03SH or equivalent.

Table 3.3. PIN DESCRIPTION

Pin No.	Description	I/O	Remark
39	CS	I	Serial interface chip select signal
40	SDO	O	Serial interface data output
41	SDI	I	Serial interface data input
42	SCK		Serial interface clock input
43	GND		
44	RESET	I	Reset signal
45	GND		
46	TSC	NC	YU
47	TSC	NC	XR
48	TSC	NC	YL
49	TSC	NC	XL
50	VDDIO	I	Interface power supply voltage
51	VDC	I	Analog power supply voltage for booster

3. Electrical Specifications

3-5. AC Specification

(a) RGB Interface Operation(1/2)

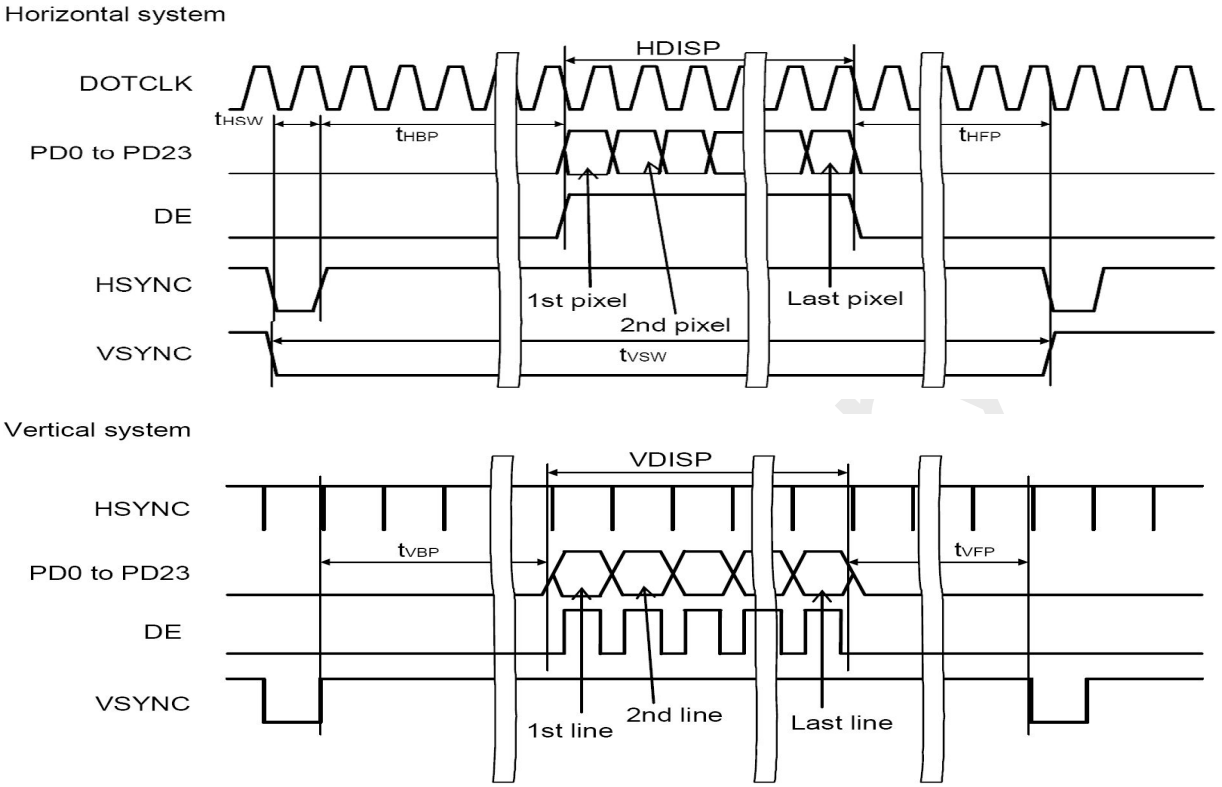

Parameter	Symbol	Condition	MIN.	TYP.	MAX.	Unit
HSYNC pulse width	t_{HSW}		1			DOTCLK
Horizontal period back porch period	t_{HBP}		1		15	DOTCLK
Horizontal period display data input period	HDISP	WVGA landscape	806	–	–	DOTCLK
		VGA landscape	646	–	–	DOTCLK
		HVGA landscape, WVGA portrait, VGA portrait	486	–	–	DOTCLK
		HVGA portrait	326	–	–	DOTCLK
		QVGA→VGA landscape (expansion display)	326	–	–	DOTCLK
		QVGA→VGA portrait (expansion display)	246	–	–	DOTCLK
Horizontal front porch period	t_{HFP}		6			DOTCLK
VSYNC pulse width	t_{VSW}		1			H
Vertical period back porch period	t_{VBP}		2		15	H
Vertical period display data input period	VDISP	WVGA portrait	–	800	–	H
		VGA portrait	–	640	–	H
		WVGA landscape, VGA landscape, HVGA portrait	–	480	–	H
		HVGA width	–	320	–	H
		QVGA→VGA landscape (expansion display)	–	240	–	H
		QVGA→VGA portrait (expansion display)	–	320	–	H
Vertical period front porch period	t_{VFP}		1			H

3. Electrical Specifications

3-5. AC Specification

(b) RGB Interface Operation(2/2)

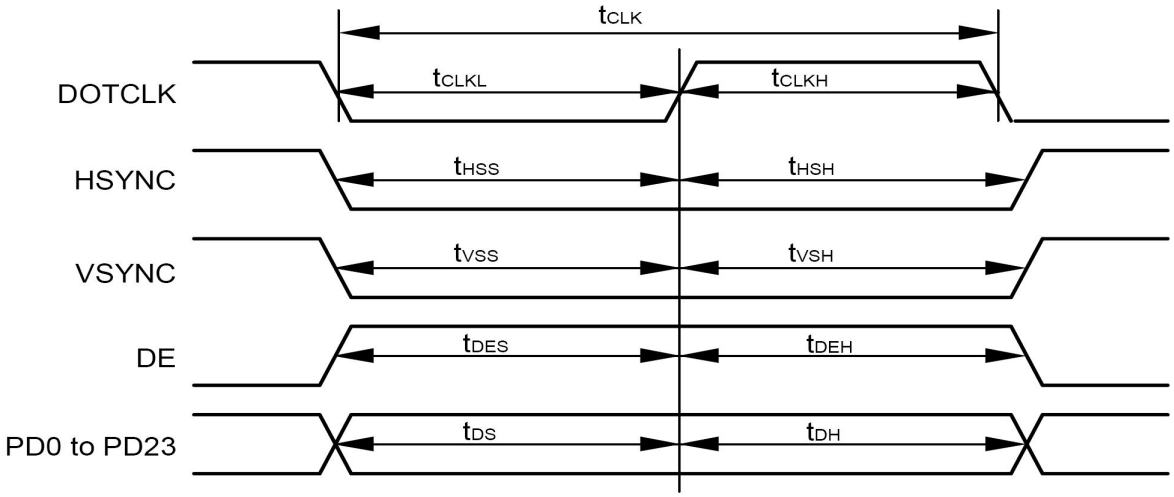

Parameter	Symbol	Condition	MIN.	TYP.	MAX.	Unit
Dot clock cycle time	t_{CLK}		(30)			ns
Dot clock low level pulse width	t_{CLKL}		(14)			ns
Dot clock high level pulse width	t_{CLKH}		(14)			ns
HSYNC set-up time	t_{HSS}		(14)			ns
HSYNC hold time	t_{HSH}		(14)			ns
VSYNC set-up time	t_{VSS}		(14)			ns
VSYNC hold time	t_{VSH}		(14)			ns
DE set-up time	t_{DES}		(14)			ns
DE hold time	t_{DEH}		(14)			ns
Data set-up time	t_{DS}		(14)			ns
Data hold time	t_{DH}		(14)			ns

3. Electrical Specifications

3-5. AC Specification

(c) Serial Interface Operation

Serial interface timing (basic)

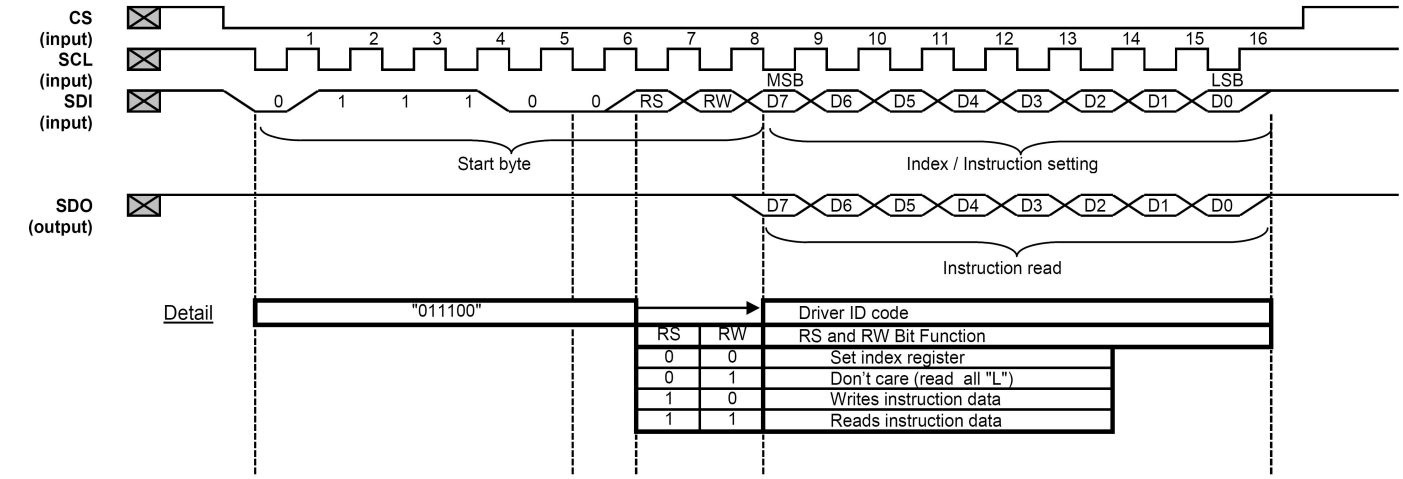

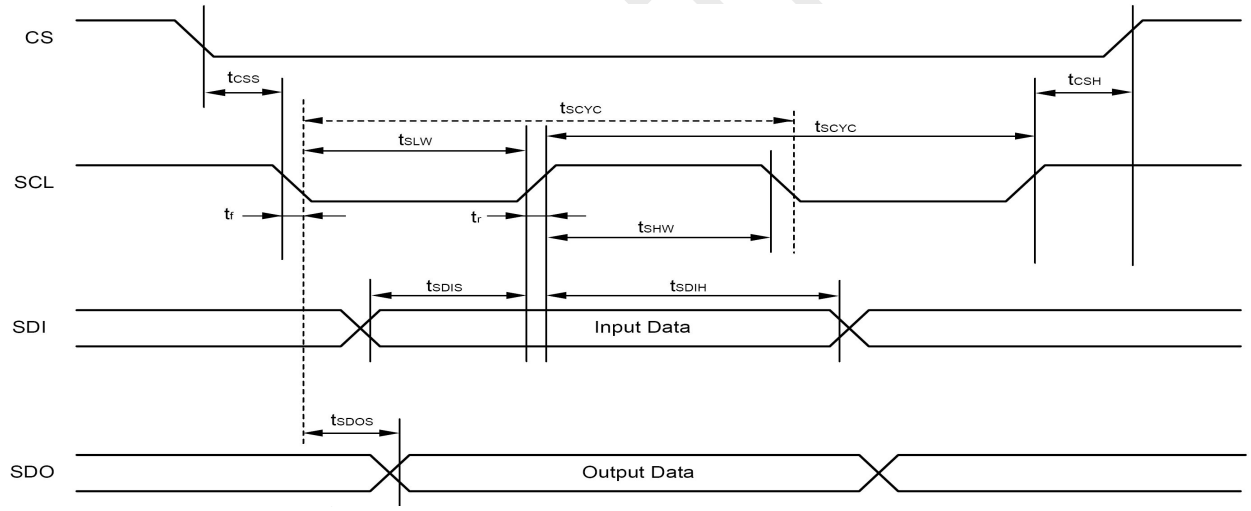

Parameter	Symbol	Condition	MIN.	TYP.	MAX.	Unit
Serial clock cycle	t_{SCYC}	SCL	(66)			ns
SCL high level pulse width	t_{SHW}	SCL	(30)			ns
SCL low level pulse width	t_{SLW}	SCL	(30)			ns
Input data set-up time	t_{SDIS}	SDI	(30)			ns
Input data hold time	t_{SDIH}	SDI	(30)			ns
Output data output delay time	t_{SDOS}	SDO			(200)	ns
CS – SCL time	t_{CSS}	CS	(30)			ns
	t_{CSH}	CS	(30)			ns

Remarks 1. The rise and fall times (tr, tf) of an input signal are defined by 2ns or less.
2. All timing data is specified using 20 to 80% of VCCIO as a benchmark.
3. The number shown in parentheses is a design target value. A final specification is determined after evaluation.

3. Electrical Specifications

3-6. Color Input Data Reference

COLOR	DISPLAY	DATA SIGNAL																								GRAY SCALE LEVEL
		RED								GREEN								BLUE								
		R0	R1	R2	R3	R4	R5	R6	R7	G0	G1	G2	G3	G4	G5	G6	G7	B0	B1	B2	B3	B4	B5	B6	B7	
BASIC COLOR	BLACK	0	0	0	0	0	0	0	0	0	0	0	0	0	0	0	0	0	0	0	0	0	0	0	0	-
	BLUE	0	0	0	0	0	0	0	0	0	0	0	0	0	0	0	0	1	1	1	1	1	1	1	1	-
	GREEN	0	0	0	0	0	0	0	0	1	1	1	1	1	1	1	1	0	0	0	0	0	0	0	0	-
	CYAN	0	0	0	0	0	0	0	0	1	1	1	1	1	1	1	1	1	1	1	1	1	1	1	1	-
	RED	1	1	1	1	1	1	1	1	0	0	0	0	0	0	0	0	0	0	0	0	0	0	0	0	-
	MAGENTA	1	1	1	1	1	1	1	1	0	0	0	0	0	0	0	0	1	1	1	1	1	1	1	1	-
	YELLOW	1	1	1	1	1	1	1	1	1	1	1	1	1	1	1	1	0	0	0	0	0	0	0	0	-
	WHITE	1	1	1	1	1	1	1	1	1	1	1	1	1	1	1	1	1	1	1	1	1	1	1	1	-
GRAY SCALE OF RED	BLACK	0	0	0	0	0	0	0	0	0	0	0	0	0	0	0	0	0	0	0	0	0	0	0	0	R0
	DARK ↑	1	0	0	0	0	0	0	0	0	0	0	0	0	0	0	0	0	0	0	0	0	0	0	0	R1
		0	1	0	0	0	0	0	0	0	0	0	0	0	0	0	0	0	0	0	0	0	0	0	0	R2
		:	:	:	:	:	:	:	:	:	:	:	:	:	:	:	:	:	:	:	:	:	:	:	:	R3~R252
	↓ LIGHT	1	0	1	1	1	1	1	1	0	0	0	0	0	0	0	0	0	0	0	0	0	0	0	0	R253
		0	1	1	1	1	1	1	1	0	0	0	0	0	0	0	0	0	0	0	0	0	0	0	0	R254
	RED	1	1	1	1	1	1	1	1	0	0	0	0	0	0	0	0	0	0	0	0	0	0	0	0	R255
GRAY SCALE OF GREEN	BLACK	0	0	0	0	0	0	0	0	0	0	0	0	0	0	0	0	0	0	0	0	0	0	0	0	G0
	DARK ↑	0	0	0	0	0	0	0	0	1	0	0	0	0	0	0	0	0	0	0	0	0	0	0	0	G1
		0	0	0	0	0	0	0	0	0	1	0	0	0	0	0	0	0	0	0	0	0	0	0	0	G2
		:			:	:	:	:	:	:			:	:	:	:	:	:			:	:	:	:	:	G3~G252
	↓ LIGHT	0	0	0	0	0	0	0	0	1	0	1	1	1	1	1	1	0	0	0	0	0	0	0	0	G253
		0	0	0	0	0	0	0	0	0	1	1	1	1	1	1	1	0	0	0	0	0	0	0	0	G254
	GREEN	0	0	0	0	0	0	0	0	1	1	1	1	1	1	1	1	0	0	0	0	0	0	0	0	G255
GRAY SCALE OF BLUE	BLACK	0	0	0	0	0	0	0	0	0	0	0	0	0	0	0	0	0	0	0	0	0	0	0	0	B0
	DARK ↑	0	0	0	0	0	0	0	0	0	0	0	0	0	0	0	0	1	0	0	0	0	0	0	0	B1
		0	0	0	0	0	0	0	0	0	0	0	0	0	0	0	0	0	1	0	0	0	0	0	0	B2
		:	:	:	:	:	:	:	:	:	:	:	:	:	:	:	:	:	:	:	:	:	:	:	:	B3~B252
	↓ LIGHT	0	0	0	0	0	0	0	0	0	0	0	0	0	0	0	0	1	0	1	1	1	1	1	1	B253
		0	0	0	0	0	0	0	0	0	0	0	0	0	0	0	0	0	1	1	1	1	1	1	1	B254
	BLUE	0	0	0	0	0	0	0	0	0	0	0	0	0	0	0	0	1	1	1	1	1	1	1	1	B255

4. Optical Characteristics

Parameter	Symbol	Condition	Min.	Typ.	Max.	Unit	Remarks
Viewing angle range	θ UP	CR ≥10	-	60	-	°(degree)	Note 3
	θ DOWN		-	50	-	°(degree)	Note 3
	θ LEFT		-	70	-	°(degree)	Note 3
	θ RIGHT		-	70	-	°(degree)	Note 3
Contrast ratio	CR	Optimal	300	400	-	-	Note 2
Brightness	Y	Optimal	360	450		cd/m²	Note 5
Brightness Uniformity	Y	Optimal	-	70	-	%	Note 5
Response time	$T_f + \tau_r$	-	-	30	50	ms	Note 4
White Chromaticity	X	CIE	-	0.309	-	-	Color Filter Only
	Y		-	0.345	-	-	
Red Chromaticity	X	CIE	-	0.603	-	-	
	Y		-	0.324	-	-	
Green Chromaticity	X	CIE	-	0.311	-	-	
	Y		-	0.563	-	-	
Blue Chromaticity	X	CIE	-	0.138	-	-	
	Y		-	0.162	-	-	

1. Optical Test Equipment & method refer to Note1.

4. Optical Characteristics

[Note 1] Optical Test Equipment Setup

Optical characteristics are determined after the unit has been 'ON' and stable for approximately 30 minutes in a dark environment at 25°C. The values specified are at an approximate distance 50cm from the LCD surface. And back light LED current 20mA/1EA

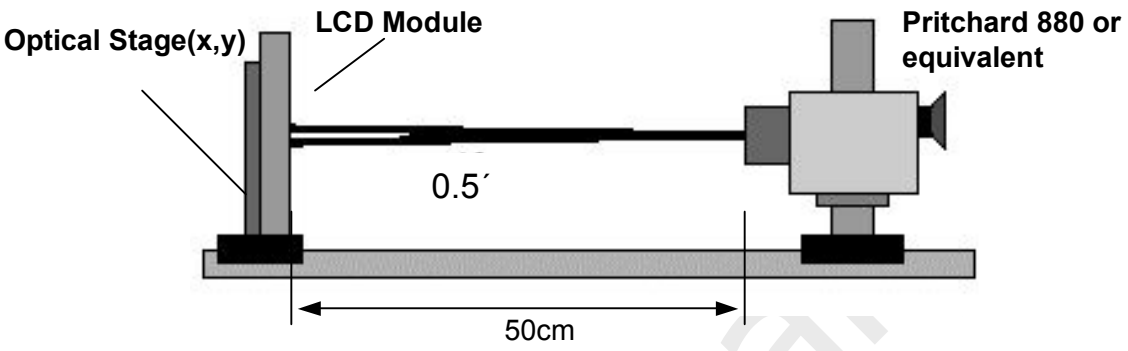

Fig 4.1. Optical Characteristic Measurement Equipment and Method

[Note 2]

Contrast ratio is defined as follows ;

$$\text{Contrast Ratio(CR)} = \frac{\text{Photo detector output with LCD being "white"}}{\text{Photo detector output with LCD being "black"}}$$

4. Optical Characteristics

[Note 3]

Viewing angle range is defined as follows;

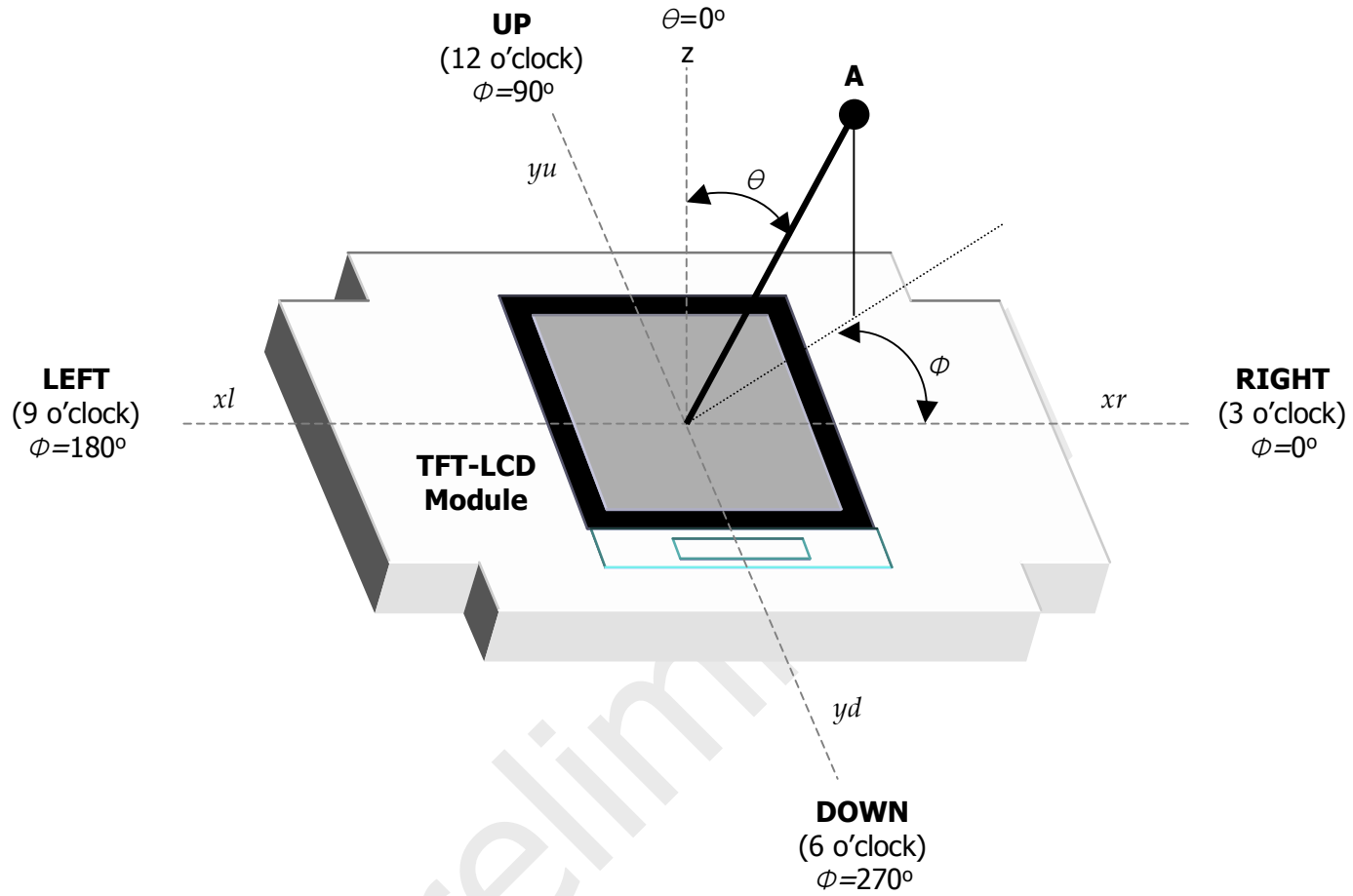

Fig 4.2. Viewing Angle

[Note 4]

Response time is obtained by measuring the transition time of photo detector output, when input signals are applied so as to make the area "black" to and from "white".

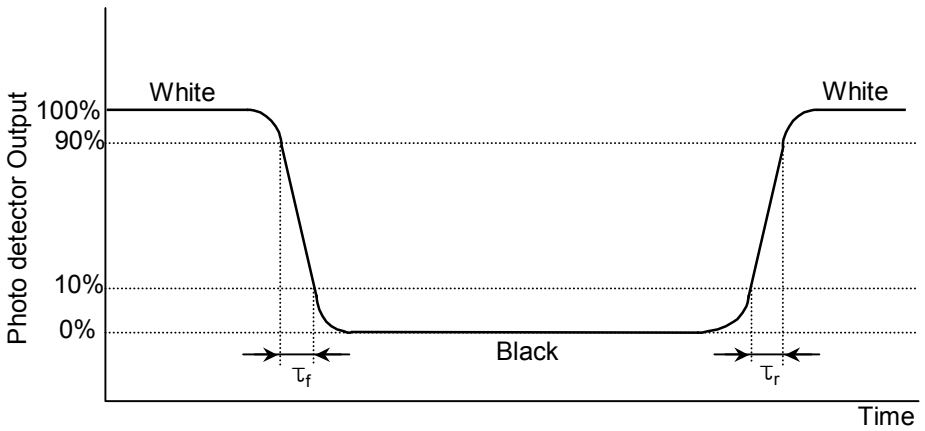

Fig 4.3. Response Time

4. Optical Characteristics

[Note 5]

The brightness measurement is taken at point B5. (with Touch Glass)

$$\text{Brightness Uniformity} = \frac{\text{Minimum Photo detector output for B1-B9 with all pixels white}}{\text{Maximum Photo detector output for B1-B9 with all pixels white}} \times 100(\%)$$

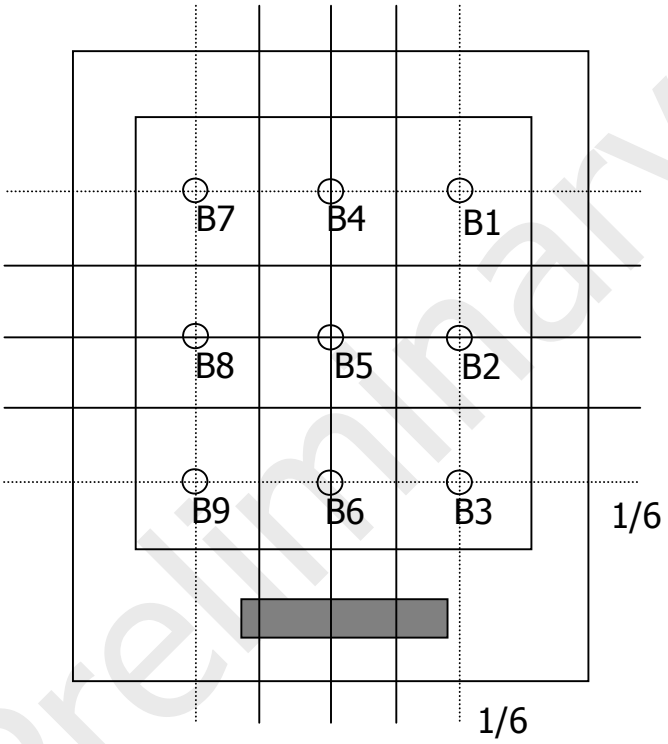

Fig 4.4. Brightness measurement points

5. Mechanical Characteristics

The contents provide general mechanical characteristics for the model LB043WV1-TD01. In addition the figures in the next page are detailed mechanical drawing of the LCD

DIMENSION	MIN	TYP	MAX	UNIT
HORIZONTAL (H)	105.8	106.0	106.2	mm
VERTICAL (V)	69.6	69.8	70.0	mm
DEPTH (D)	3.70	4.00	4.30	mm

5. Mechanical Characteristics

[Module Outline Dimension]

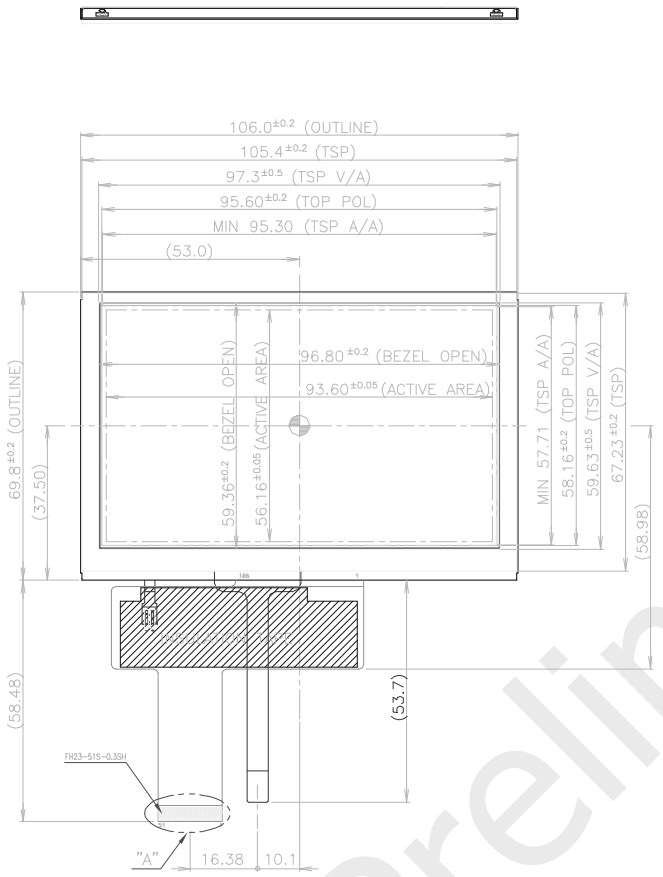

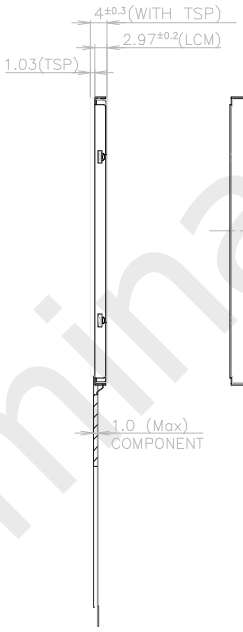

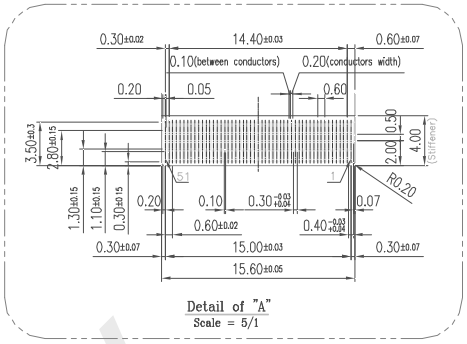

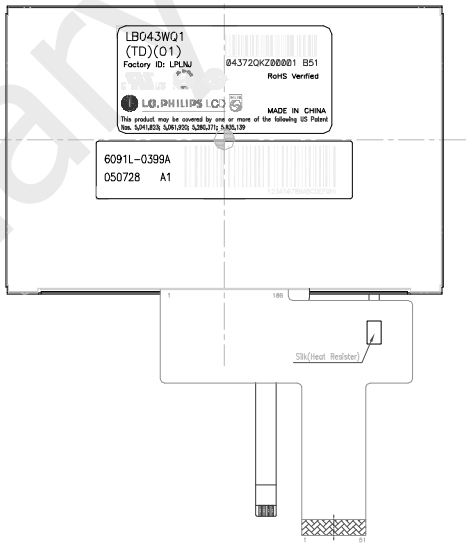

Notes

1. UNSPECIPIED DIMENSION TOLERANCE ARE ± 0.2mm
2. UNASSIGNED R=0.2mm
3. CONNETOR : FH23-51S-0.3SH

CIRCUIT DIAGRAM

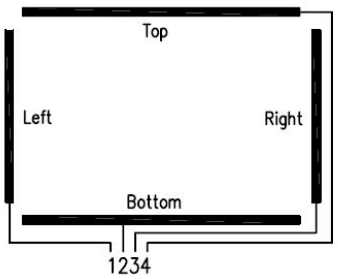

SIGNAL ASSIGNMENT

Pin No	Signal
1	Left
2	Bottom
3	Right
4	Top

PIN MAP

NO.	DESCRIPTION	NO.	DESCRIPTION	NO.	DESCRIPTION
1	VLED+	18	DG3	35	GND
2	VLED-	19	DG2	36	HSYNC
3	GND	20	DG1	37	VSYNC
4	GND	21	DG0	38	GND
5	DR7	22	GND	39	XCS
6	DR6	23	DB7	40	DOUT
7	DR5	24	DB6	41	DIN
8	DR4	25	DB5	42	SCL
9	DR3	26	DB4	43	GND
10	DR2	27	DB3	44	XRES
11	DR1	28	DB2	45	GND
12	DR0	29	DB1	46	TSC
13	GND	30	DB0	47	TSC
14	DG7	31	GND	48	TSC
15	DG6	32	DE	49	TSC
16	DG5	33	GND	50	VDDIO
17	DG4	34	MCLK	51	VDC

6. Reliability Test

6-1. Reliability Condition

NO	TEST ITEMS	CONDITION	REMARK
1	High Temperature Storage Test	Ta = 80℃ 240h	-
2	Low Temperature Storage Test	Ta = -30℃ 240h	-
3	High Temperature Operation Test	Ta = 70℃ 240h	-
4	Low Temperature Operation Test	Ta = -20℃ 240h	-
5	High Temperature and High Humidity Operation Test	Ta = 60℃ 90%RH 240h	-
6	Shock Test (operating)	Half Sine wave: 180G 2ms ±X, ±Y, ±Z Total 6 face. Test Drop:each direction 1 Drop	-
7	Vibration Test (operating)	Random 10Hz, 0.0035G^/Hz ↔ 300Hz, 0.0035G^/Hz X/Y/Z 30min Total 1.0G	-
8	Thermal Shock Test	-30℃(0.5h) ~ 80℃(0.5h) / 100 cycles	-

{ Result Evaluation Criteria }
There should be no change which might affect the practical display function when the display quality test is conducted under normal operating condition.

7. Packing

7-1. Designation of Lot Mark

(1) Lot Mark

A	B	C	D	E	F	G	H	I	J	K	L	M

A,B,C : SIZE(INCH)
E : MONTH
D : YEAR
F ~ M : SERIAL NO.

Note
1. YEAR

Year	2001	2002	2003	2004	2005	2006	2007	2008	2009	2010
Mark	1	2	3	4	5	6	7	8	9	0

2. MONTH

Month	Jan	Feb	Mar	Apr	May	Jun	Jul	Aug	Sep	Oct	Nov	Dec
Mark	1	2	3	4	5	6	7	8	9	A	B	C

(2) Location of Lot Mark

Serial NO. is printed on the surface of LCM
This is subject to change without prior notice.

7-2. Packing Form

(1) Package quantity in one box : 63 pcs

(2) Box Size : 475x348x175 (mm)

8. PRECAUTIONS

Please pay attention to the following when you use this TFT LCD module.

8-1. ASSEMBLING PRECAUTIONS

(1) Acetic acid type and chlorine type materials for the cover case are not desirable because the former generates corrosive gas of attacking the polarizer at high temperature and the latter causes circuit break by electro-chemical reaction.
(2) Do not touch, push or rub the exposed polarizers with glass, tweezers or anything harder than HB pencil lead. And please do not rub with dust clothes with chemical treatment.
Do not touch the surface of polarizer for bare hand or greasy cloth.(Some cosmetics deteriorate the polarizer.)
(3) When the surface becomes dusty, please wipe gently with absorbent cotton or other soft materials like chamois soaks with petroleum benzine. Normal-hexane is recommended for cleaning the adhesives used to attach front / rear polarizers. Do not use acetone, toluene and alcohol because they cause chemical damage to the polarizer.
(4) Wipe off saliva or water drops as soon as possible. Their long time contact with polarizer causes deformations and color fading.
(5) Do not open the case because inside circuits do not have sufficient strength.
(6) The metal case of a module should be contacted to electrical ground of your system.

8-2. OPERATING PRECAUTIONS

(1) The spike noise causes the mis-operation of circuits. It should be lower than following voltage :
V=±200mV(Over and under shoot voltage)
(2) Response time depends on the temperature.(In lower temperature, it becomes longer.)
(3) Brightness depends on the temperature. (In lower temperature, it becomes lower.)
And in lower temperature, response time(required time that brightness is stable after turned on) becomes longer.
(4) Be careful for condensation at sudden temperature change. Condensation makes damage to polarizer or electrical contacted parts. And after fading condensation, smear or spot will occur.
(5) When fixed patterns are displayed for a long time, remnant image is likely to occur.
(6) Module has high frequency circuits. Sufficient suppression to the electromagnetic interference shall be done by system manufacturers. Grounding and shielding methods may be important to minimized the interference.

8. PRECAUTIONS

8-3. ELECTROSTATIC DISCHARGE CONTROL

Since a module is composed of electronic circuits, it is not strong to electrostatic discharge. Make certain that treatment persons are connected to ground through wrist band etc. And don't touch interface pin directly.

8-4. PRECAUTIONS FOR STRONG LIGHT EXPOSURE

Strong light exposure causes degradation of polarizer and color filter.

8-5. STORAGE

When storing modules as spares for a long time, the following precautions are necessary.

(1) Store them in a dark place. Do not expose the module to sunlight or fluorescent light. Keep the temperature between 5°C and 35°C at normal humidity.

(2) The polarizer surface should not come in contact with any other object.
It is recommended that they be stored in the container in which they were shipped.

8-6. HANDLING PRECAUTIONS FOR PROTECTION FILM

(1) When the protection film is peeled off, static electricity is generated between the film and polarizer. This should be peeled off slowly and carefully by people who are electrically grounded and with well ion-blown equipment or in such a condition, etc.

(2) The protection film is attached to the polarizer with a small amount of glue. If some stress is applied to rub the protection film against the polarizer during the time you peel off the film, the glue is apt to remain on the polarizer.
Please carefully peel off the protection film without rubbing it against the polarizer.

(3) When the module with protection film attached is stored for a long time, sometimes there remains a very small amount of glue still on the polarizer after the protection film is peeled off.

(4) You can remove the glue easily. When the glue remains on the polarizer surface or its vestige is recognized, please wipe them off with absorbent cotton waste or other soft material like chamois soaked with normal-hexane.