SPECIFICATION
FOR
APPROVAL

( ) **Preliminary Specification**
(◆) **Final Specification**

Title	15.0" XGA TFT LCD

BUYER	General
MODEL	

SUPPLIER	LG.Philips LCD Co., Ltd.
*MODEL	LP150X09
Suffix	B5K8

*When you obtain standard approval,
please use the above model name without suffix

APPROVED BY	SIGNATURE
/	
/	
/	

Please return 1 copy for your confirmation with your signature and comments.

APPROVED BY	SIGNATURE
S. C. Yoon / S.Manager	
REVIEWED BY	
G.J. Han / Manager	
J.W. Park / Manager	
PREPARED BY	
I. Y. Jung / Engineer	
J.H. Kim / Engineer	

Products Engineering Dept.
LG. Philips LCD Co., Ltd

Contents

No	ITEM	Page
	COVER	1
	CONTENTS	2
	RECORD OF REVISIONS	3
1	GENERAL DESCRIPTION	4
2	ABSOLUTE MAXIMUM RATINGS	5
3	ELECTRICAL SPECIFICATIONS	
3-1	ELECTRICAL CHARACTERISTICS	6
3-2	INTERFACE CONNECTIONS	7
3-3	SIGNAL TIMING SPECIFICATIONS	9
3-4	SIGNAL TIMING WAVEFORMS	9
3-5	COLOR INPUT DATA REFERNECE	10
3-6	POWER SEQUENCE	11
4	OPTICAL SFECIFICATIONS	12
5	MECHANICAL CHARACTERISTICS	16
6	RELIABILITY	20
7	INTERNATIONAL STANDARDS	
7-1	SAFETY	21
7-2	EMC	21
8	PACKING	
8-1	DESIGNATION OF LOT MARK	22
8-2	PACKING FORM	22
9	PRECAUTIONS	23
A	APPENDIX. Enhanced Extended Display Identification Data	25

RECORD OF REVISIONS

Revision No	Revision Date	Page	Description	EDID Ver.
1.0	12. 10. 2005	-	Final Specifications	1.0
1.1	10. 23. 2007	4	Power consumption changed	1.0
		6	Electrical characteristics changed	
		7	LCD Interface chip changed	
		9	Timing table updated	
		12	color coordinates changed	

1. General Description

The LP150X09 is a Color Active Matrix Liquid Crystal Display with an integral Cold Cathode Fluorescent Lamp (CCFL) backlight system. The matrix employs a-Si Thin Film Transistor as the active element. It is a transmissive type display operating in the normally white mode. This TFT-LCD has 15.0 inches diagonally measured active display area with XGA resolution(768 vertical by 1024 horizontal pixel array). Each pixel is divided into Red, Green and Blue sub-pixels or dots which are arranged in vertical stripes. Gray scale or the brightness of the sub-pixel color is determined with a 6-bit gray scale signal for each dot, thus, presenting a palette of more than 262,144 colors.

The LP150X09 has been designed to apply the interface method that enables low power, high speed, low EMI.

The LP150X09 is intended to support applications where thin thickness, low power are critical factors and graphic displays are important. In combination with the vertical arrangement of the sub-pixels, the LP150X09 characteristics provide an excellent flat display for office automation products such as Notebook PC.

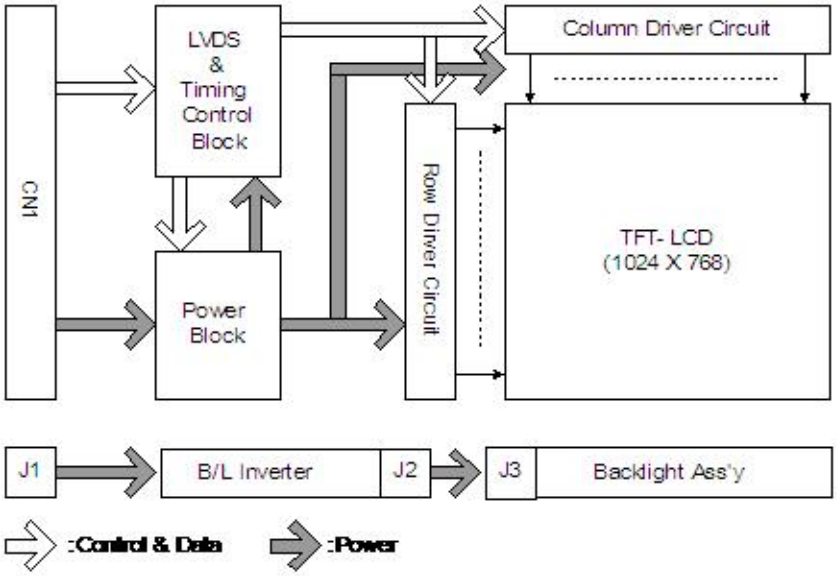

General Features

Active Screen Size	15.0 inches(38.1cm) diagonal
Outline Dimension	317.3(H) × 241.5(V) × 5.7(D) mm (Typ.)
Pixel Pitch	0.297 mm × 0.297 mm
Pixel Format	1024 horiz. By 768 vert. Pixels RGB strip arrangement
Color Depth	6-bit, 262,144 colors
Luminance, White	180 cd/m^2(Typ.), 5p average
Power Consumption	Total 4.96 Watt (Typ.)
Weight	575 g(Max.) with inverter and bracket
Display Operating Mode	Transmissive mode, normally white
Surface Treatment	Hard coating(3H) Anti-glare treatment of the front polarizer

2. Absolute Maximum Ratings

The following are maximum values which, if exceeded, may cause faulty operation or damage to the unit.

Table 1. ABSOLUTE MAXIMUM RATINGS

Parameter	Symbol	Values		Units	Notes
		Min	Max		
Power Input Voltage	VCC	-0.3	4.0	Vdc	at 25 ± 5°C
Operating Temperature	TOP	0	50	°C	1
Storage Temperature	HST	-20	60	°C	1
Operating Ambient Humidity	HOP	10	90	%RH	1
Storage Humidity	HST	10	90	%RH	1

Note : 1. Temperature and relative humidity range are shown in the figure below.
Wet bulb temperature should be 39°C Max, and no condensation of water.

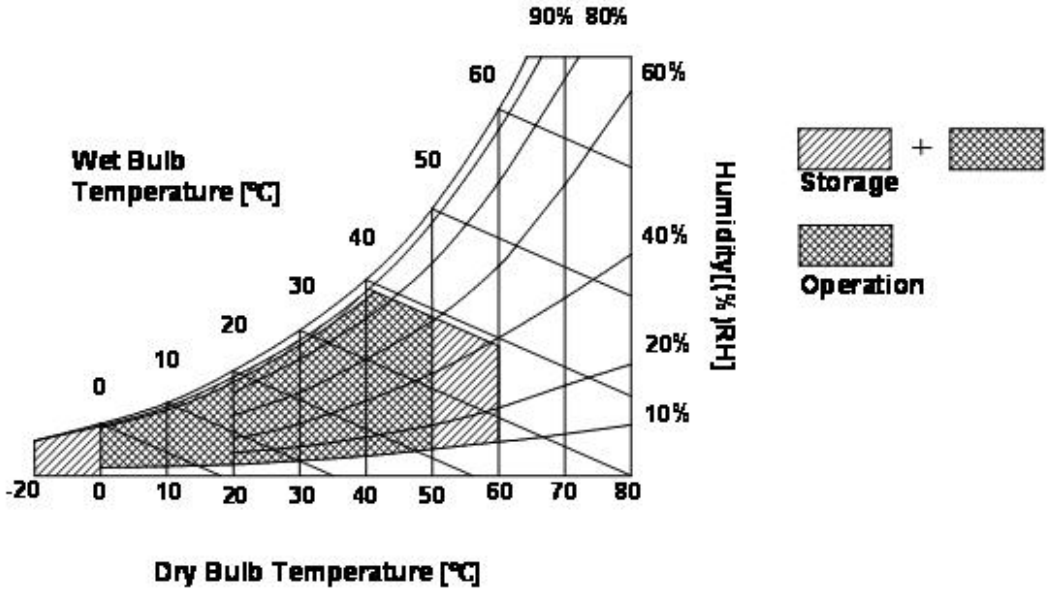

3. Electrical Specifications

3-1. Electrical Characteristics

The LP150X09 requires two power inputs. One is employed to power the LCD electronics and to drive the TFT array and liquid crystal. The second input which powers the CCFL, is typically generated by an inverter. The inverter is an external unit to the LCD.

Table 2. ELECTRICAL CHARACTERISTICS

Parameter	Symbol	Values			Unit	Notes
		Min	Typ	Max		
MODULE :						
Power Supply Input Voltage	VCC	3.0	3.3	3.6	V_{DC}	
Power Supply Input Current	I_{CC}	-	230	260	mA	1
Power Consumption	Pc	-	0.76	0.86	Watt	1
Differential Impedance	Zm	90	100	110	Ohm	2
LAMP :						
Operating Voltage	V_{BL}	630(7.0mA)	665(6.3mA)	870(2.0mA)	V_{RMS}	
Operating Current	I_{BL}	2.0	6.3	7.0	mA_{RMS}	3
Operating Frequency	f_{BL}	50	65	80	kHz	
Discharge Stabilization Time	Ts	-	-	3	Min	4
Life Time		15,000	-	-	Hrs	5
INVERTER :						
Input Voltage	V_{IN}	7.5	14.4	21.0	V_{DC}	
Input Current	I_{IN}	-	360	-	mA	6
Input Power Consumption	P_{IN}	-	5.18	-	W	6
Backlight On/Off Control	FPVEE_High	2.0	-	5.25	V_{DC}	
	FPVEE_Low	-0.3	-	0.8	V_{DC}	
Backlight Adjust (I_{BL} Control)		FF	-	00	Hex	
Output Voltage	V_{OUT}	580	680	780	V_{RMS}	7
Output Current (Aging 30minutes)	I_{OUT}_FF	2	-	-	mA_{RMS}	
	I_{OUT}_00	6.0	6.3	6.6	mA_{RMS}	7
Operating Frequency	Freq.	45	-	65	KHz	7
Output Power Consumption	P_{OUT}	3.65	4.28	4.91	W	6
Open Lamp Voltage	V_{OPEN}	1400	-	1800	V_{RMS}	8
Efficiency	η	75	-	-	%	9
Striking Time	T_S	0.6	-	1.4	sec	8

Note)

1. The specified current and power consumption are under the Vcc = 3.3V , 25℃, fv = 60Hz condition whereas **Mosaic Pattern** is displayed and fv is the frame frequency.
2. This impedance value is needed to proper display and measured form LVDS Tx to the mating connector.
3. The typical operating current is for the typical surface luminance (L_{WH}) in optical characteristics.

Note)

4. Define the brightness of the lamp after being lighted for 5 minutes as 100%, Ts is the time required for the brightness of the center of the lamp to be not less than 95%.
5. The life time is determined as the time at which brightness of lamp is 50% compare to that of initial value at the typical lamp current.
6. VIN = 14.4V(Typ.), 28_H
7. SMData=00_H
8. No Load, SMData=00_H.
9. VIN =7.5V(Min.), 00H.

3-2. Interface Connections

This LCD employs two interface connections, a 30 pin connector is used for the module electronics interface and the other connector is used for the integral backlight system.
The electronics interface connector is a model FI-XB30SRL-HF11 manufactured by JAE.

Table 3. MODULE CONNECTOR PIN CONFIGURATION (CN1)

Pin	Symbol	Description	Notes
1	GND	Ground	1, Interface chips 1.1 LCD : SIW, SIWLVDSRx 1.2 System : it must include international standard LVDS Transmitter. * Pin to Pin compatible with LVDS 2. Connector 2.1 LCD : FI-XB30SRL-HF11, JAE or MDF76LBRW-30S-1H, HIROSE 2.2 Mating : FI-X30M or equivalent. 2.3 Connector pin arrangement 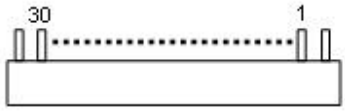 [LCD Module Rear View]
2	VCC	Power Supply, 3.3V Typ.	
3	VCC	Power Supply, 3.3V Typ.	
4	V EEDID	DDC 3.3V power	
5	BIST	Reserved for supplier Bist test point	
6	Clk EEDID	DDC Clock	
7	DATA EEDID	DDC Data	
8	R_{IN} 0-	Negative LVDS differential data input	
9	R_{IN} 0+	Positive LVDS differential data input	
10	GND	Ground	
11	R_{IN} 1-	Negative LVDS differential data input	
12	R_{IN} 1+	Positive LVDS differential data input	
13	GND	Ground	
14	R_{IN} 2-	Negative LVDS differential data input	
15	R_{IN} 2+	Positive LVDS differential data input	
16	GND	Ground	
17	CLKIN-	Negative LVDS differential clock input	
18	CLKIN+	Positive LVDS differential clock input	
19	GND	Ground	
20	NC	No connection	
21	NC	No connection	
22	GND	Ground	
23	NC	No connection	
24	NC	No connection	
25	GND	Ground	
26	NC	No connection	
27	NC	No connection	
28	GND	Ground	
29	NC	No connection	
30	NC	No connection	

The inverter interface connector(J1) is a LVC-D20SFYG model manufactured by Honda. The pin configuration for the connector is shown in the table below.

Table 4. BACKLIGHT INVERTER CONNECTOR PIN CONFIGURATION (J1)

Pin	Symbol	Description	Notes
1	V_{IN}	Power for the inverter	[Connector] LVC-D20SFYG, Honda [Connector pin arrangement] 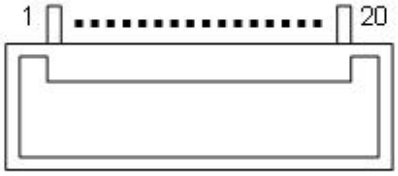
2	V_{IN}	Power for the inverter	
3	V_{IN}	Power for the inverter	
4	NC	No connection	
5	GND	Ground	
6	5V_SUS	Power for the control circuit	
7	5V_ALW	Power for storing a brightness values	
8	GND	Ground	
9	SMB_DAT	Brightness data	
10	SMB_CLK	Clock for brightness data	
11	GND	Ground	
12	FPVEE	Enable for lamp turn on and off	
13	GND	Ground	
14	LAMP_STAT	Lamp status (Feedback, Lamp On = 5V, Lamp Off 0V), from control chip	
15~20	NC	No Connection	

The backlight interface connector is a model BHSR-02VS-1, manufactured by JST or a model 1376176-1, manufactured by AMP. The mating connector part number is SM02B-BHSS-1 or equivalent.

Table 5. BACKLIGHT CONNECTOR PIN CONFIGURATION (J3)

Pin	Symbol	Description	Notes
1	HV	Power supply for lamp (High voltage side)	1
2	LV	Power supply for lamp (Low voltage side)	1

Notes : 1. The high voltage side terminal is colored pink and the low voltage side terminal is white

3-3. Signal Timing Specifications

This is the signal timing required at the input of the User connector. All of the interface signal timing should be satisfied with the following specifications and specifications of LVDS Tx/Rx for it's proper operation.

Table 6. TIMING TABLE

ITEM	Symbol		Min	Typ	Max	Unit	Note
DCLK	Frequency	f_{CLK}	62	65	68	MHz	15.4ns
Hsync	Period	t_{HP}	1206	1344	1364	t_{CLK}	
	Width	t_{WH}	8	136	308		
	Width-Active	t_{WHA}	1024	1024	1024		
Vsync	Period	t_{VP}	780	806	830	t_{HP}	
	Width	t_{WV}	1	6	54		
	Width-Active	t_{WVA}	768	768	768		
Data Enable	Horizontal back porch	t_{HBP}	10	160	316	t_{CLK}	
	Horizontal front porch	t_{HFP}	10	24	316		
	Vertical back porch	t_{VBP}	7	29	60	t_{HP}	
	Vertical front porch	t_{VFP}	1	3	54		

3-4. Signal Timing Waveforms

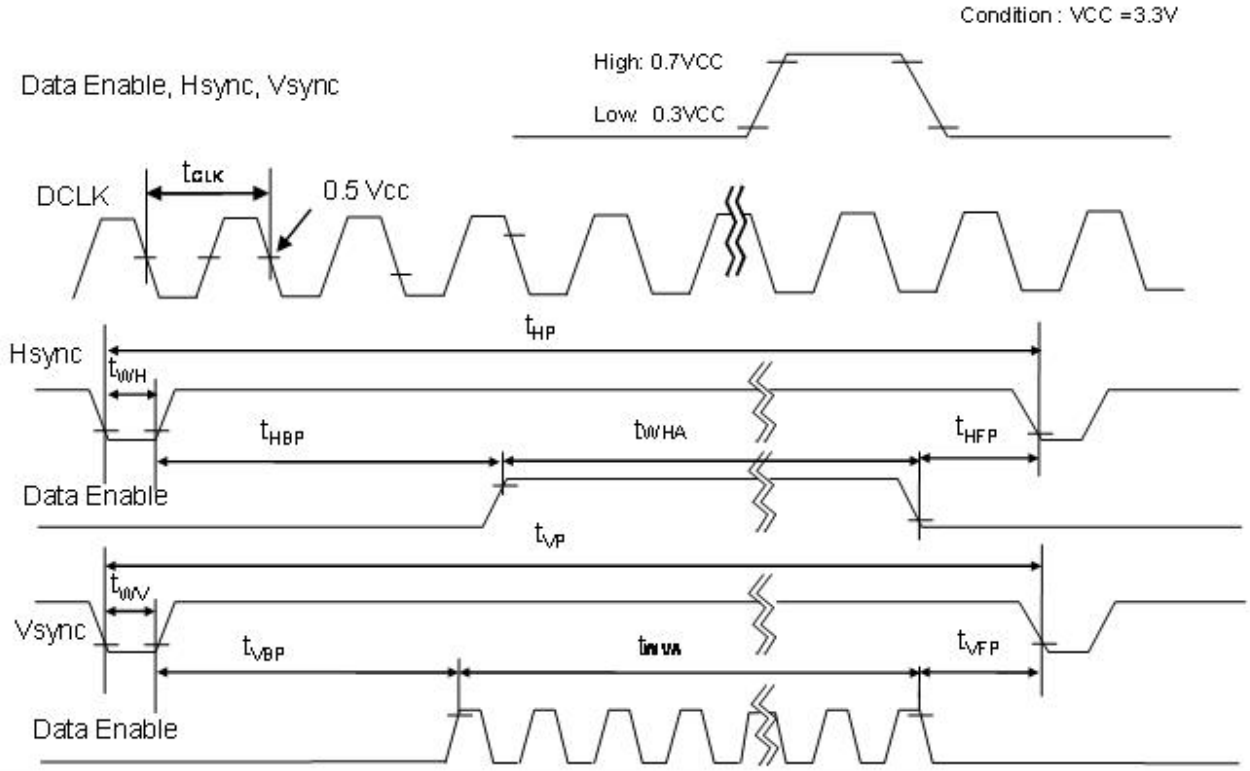

3-5. Color Input Data Reference

The brightness of each primary color (red,green and blue) is based on the 6-bit gray scale data input for the color ; the higher the binary input, the brighter the color. The table below provides a reference for color versus data input.

Table 7. COLOR DATA REFERENCE

Color		Input Color Data																	
		RED						GREEN						BLUE					
		MSB					LSB	MSB					LSB	MSB					LSB
		R5	R4	R3	R2	R1	R0	G5	G4	G3	G2	G1	G0	B5	B4	B3	B2	B1	B0
Basic Color	Black	0	0	0	0	0	0	0	0	0	0	0	0	0	0	0	0	0	0
	Red	1	1	1	1	1	1	0	0	0	0	0	0	0	0	0	0	0	0
	Green	0	0	0	0	0	0	1	1	1	1	1	1	0	0	0	0	0	0
	Blue	0	0	0	0	0	0	0	0	0	0	0	0	1	1	1	1	1	1
	Cyan	0	0	0	0	0	0	1	1	1	1	1	1	1	1	1	1	1	1
	Magenta	1	1	1	1	1	1	0	0	0	0	0	0	1	1	1	1	1	1
	Yellow	1	1	1	1	1	1	1	1	1	1	1	1	0	0	0	0	0	0
	White	1	1	1	1	1	1	1	1	1	1	1	1	1	1	1	1	1	1
RED	RED (00)	0	0	0	0	0	0	0	0	0	0	0	0	0	0	0	0	0	0
	RED (01)	0	0	0	0	0	1	0	0	0	0	0	0	0	0	0	0	0	0
	...	...						...						...					
	RED (62)	1	1	1	1	1	0	0	0	0	0	0	0	0	0	0	0	0	0
	RED (63)	1	1	1	1	1	1	0	0	0	0	0	0	0	0	0	0	0	0
GREEN	GREEN (00)	0	0	0	0	0	0	0	0	0	0	0	0	0	0	0	0	0	0
	GREEN (01)	0	0	0	0	0	0	0	0	0	0	0	1	0	0	0	0	0	0
	...	...						...						...					
	GREEN (62)	0	0	0	0	0	0	1	1	1	1	1	0	0	0	0	0	0	0
	GREEN (63)	0	0	0	0	0	0	1	1	1	1	1	1	0	0	0	0	0	0
BLUE	BLUE (00)	0	0	0	0	0	0	0	0	0	0	0	0	0	0	0	0	0	0
	BLUE (01)	0	0	0	0	0	0	0	0	0	0	0	0	0	0	0	0	0	1
	...	...						...						...					
	BLUE (62)	0	0	0	0	0	0	0	0	0	0	0	0	1	1	1	1	1	0
	BLUE (63)	0	0	0	0	0	0	0	0	0	0	0	0	1	1	1	1	1	1

3-6. Power Sequence

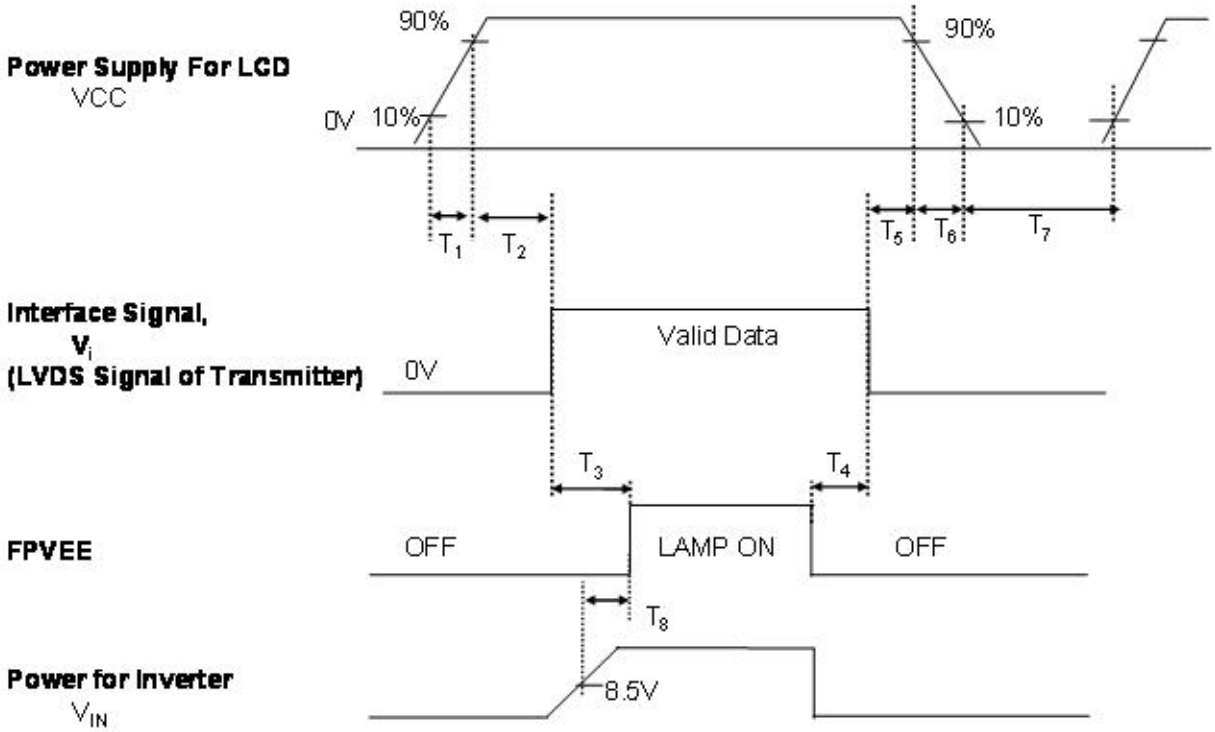

Table 8. POWER SEQUENCE TABLE

Parameter	Value			Units
	Min.	Typ.	Max.	
T_1	-	-	10	(ms)
T_2	0	-	50	(ms)
T_3	200	-	-	(ms)
T_4	0	-	-	(ms)
T_5	0	-	50	(ms)
T_6	0	-	10	(ms)
T_7	400	-	-	(ms)
T_8	10	-	-	(ms)

Note)
1. Please avoid floating state of interface signal at invalid period.
2. When the interface signal is invalid, be sure to pull down the power supply for LCD VCC to 0V.
3. Lamp power must be turn on after power supply for LCD and interface signal are valid.

4. Optical Specification

Optical characteristics are determined after the unit has been 'ON' and stable for approximately 30 minutes in a dark environment at 25°C. The values specified are at an approximate distance 50cm from the LCD surface at a viewing angle of Φ and Θ equal to 0°.
FIG. 1 presents additional information concerning the measurement equipment and method.

FIG. 1 Optical Characteristic Measurement Equipment and Method

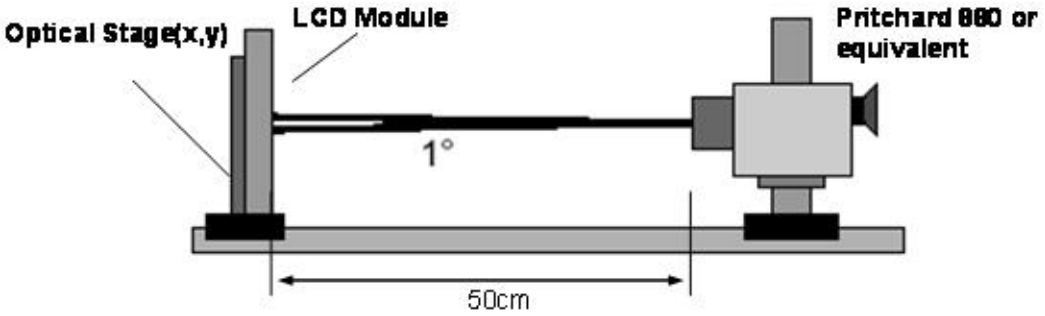

Table 9. OPTICAL CHARACTERISTICS

Ta=25°C, VCC=3.3V, fv=60Hz, f_{CLK}= 65MHz, Iout = 6.3mA (SMB-DAT=00H)

Parameter	Symbol	Values			Units	Notes
		Min	Typ	MAx		
Contrast Ratio	CR	350	-	-		1
Surface Luminance, white	L_{WH}	150	180	-	cd/m²	2
Luminance Variation	δ_{WHITE}	-	-	50	%	3
Response Time	$Tr(Tr_R+Tr_D)$	-	30	40	ms	4
Color Coordinates						
RED	RX	0.561	0.591	0.621		
	RY	0.316	0.346	0.376		
GREEN	GX	0.300	0.330	0.360		
	GY	0.517	0.547	0.577		
BLUE	BX	0.131	0.161	0.191		
	BY	0.122	0.152	0.182		
WHITE	WX	0.283	0.313	0.343		
	WY	0.299	0.329	0.359		
Viewing Angle						5
x axis, right(Φ=0°)	Θr	40	45	-	degree	
x axis, left (Φ=180°)	Θl	40	45	-	degree	
y axis, up (Φ=90°)	Θu	10	15	-	degree	
y axis, down (Φ=270°)	Θd	30	35	-	degree	
Gray Scale						6

Note)

1. Contrast Ratio(CR) is defined mathematically as

$$\text{Contrast Ratio} = \frac{\text{Surface Luminance with all white pixels}}{\text{Surface Luminance with all black pixels}}$$

2. Surface luminance is the average of 5 point across the LCD surface 50cm from the surface with all pixels displaying white. For more information see FIG 1.

$$L_{WH} = \text{Average}(L_4, L_5, L_7, L_9, L_{10})$$

3. The variation in surface luminance , The panel total variation (δ_{WHITE}) is determined by measuring L_N at each test position 1 through 13 and then defined as followed numerical formula. For more information see FIG 2.

$$\delta_{WHITE} = \frac{\text{Maximum}(L_1, L_2, \ldots L_{13}) - \text{Minimum}(L_1, L_2, \ldots L_{13})}{\text{Maximum}(L_1, L_2, \ldots L_{13})} \times 100$$

4. Response time is the time required for the display to transition from white to black (rise time, Tr_R) and from black to white(Decay Time, Tr_D). For additional information see FIG 3.

5. Viewing angle is the angle at which the contrast ratio is greater than 10. The angles are determined for the horizontal or x axis and the vertical or y axis with respect to the z axis which is normal to the LCD surface. For more information see FIG 4.

6. Gray scale specification

* f_V=60Hz

Gray Level	Luminance [%] (Typ)
L0	0.15
L7	0.80
L15	4.25
L23	10.90
L31	21.0
L39	34.8
L47	52.5
L55	74.2
L63	100

FIG. 2 Luminance

<measuring point for surface luminance & measuring point for luminance variation>

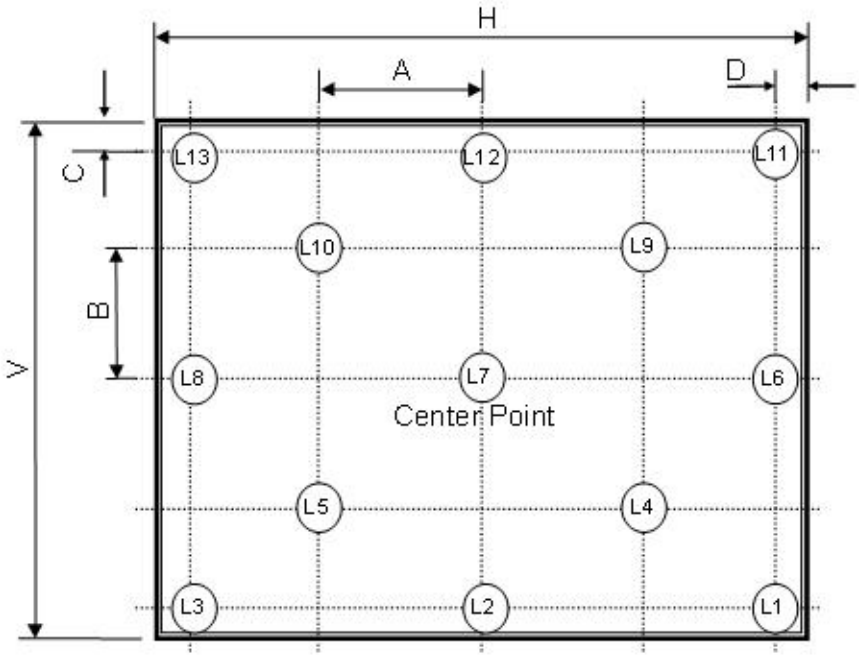

H,V : ACTIVE AREA
A : H/4 mm
B : V/4 mm
C : 10 mm
D : 10 mm
POINTS : 13 POINTS

FIG. 3 Response Time

The response time is defined as the following figure and shall be measured by switching the input signal for "black" and "white".

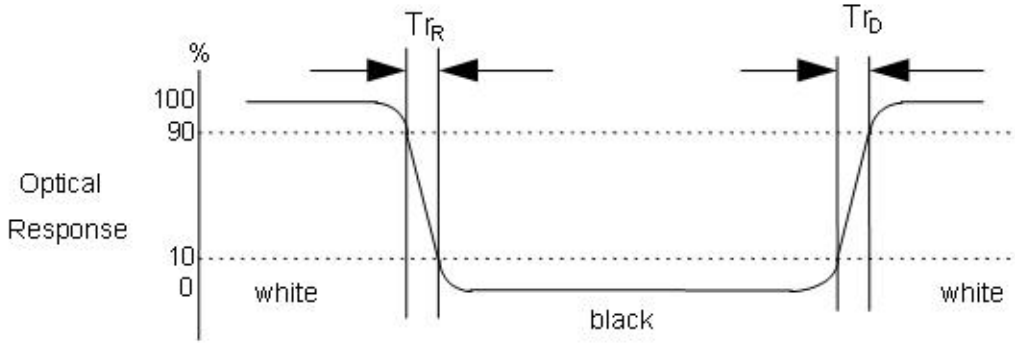

FIG. 4 Viewing angle

<Dimension of viewing angle range>

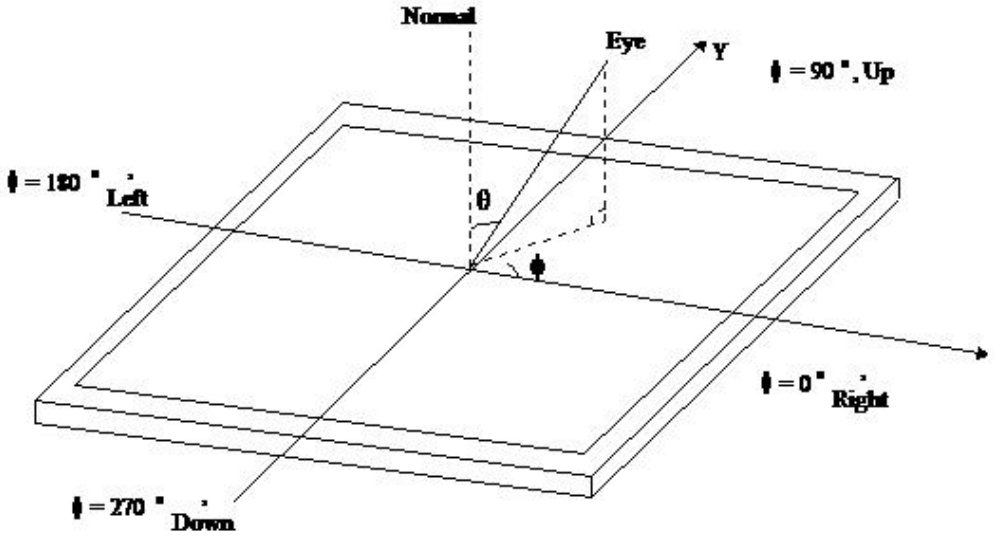

5. Mechanical Characteristics

The contents provide general mechanical characteristics for the model LP150X09. In addition the figures in the next page are detailed mechanical drawing of the LCD.

Outline Dimension	Horizontal	317.3 ± 0.5mm
	Vertical	241.5 ± 0.5mm
	Depth	5.7 mm(Typ.) 6.0mm(Max.)
Bezel Area	Horizontal	307.5 ± 0.5mm
	Vertical	231.4 ± 0.5mm
Active Display Area	Horizontal	304.128 mm
	Vertical	228.096 mm
Weight	575g (Max.) with inverter & bracket	
Surface Treatment	Hard coating(3H) Anti-glare treatment of the front polarizer	

<FRONT VIEW>

Note) Unit:[mm], General tolerance: ±0.5mm

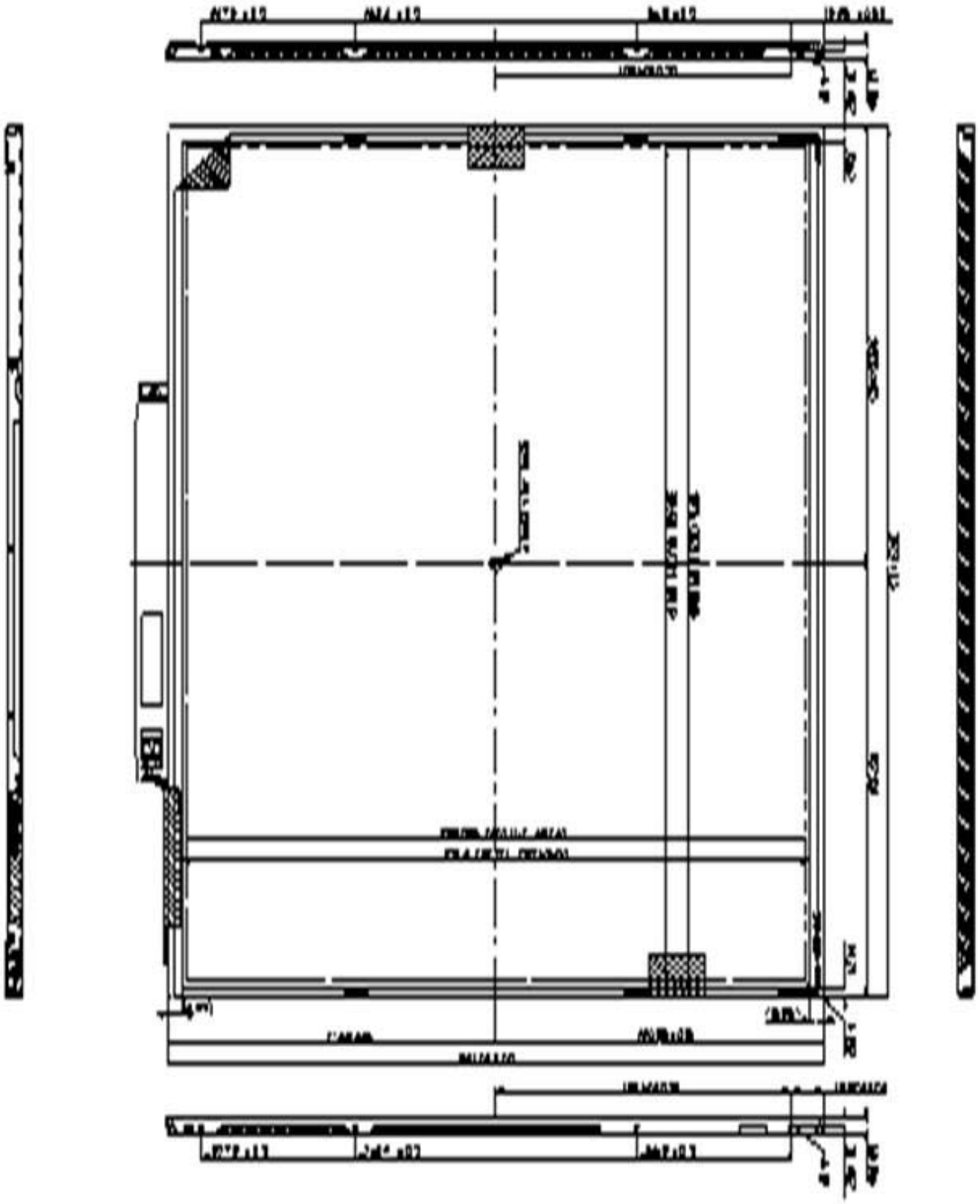

<REAR VIEW>

Note) Unit:[mm], General tolerance: ±0.5mm

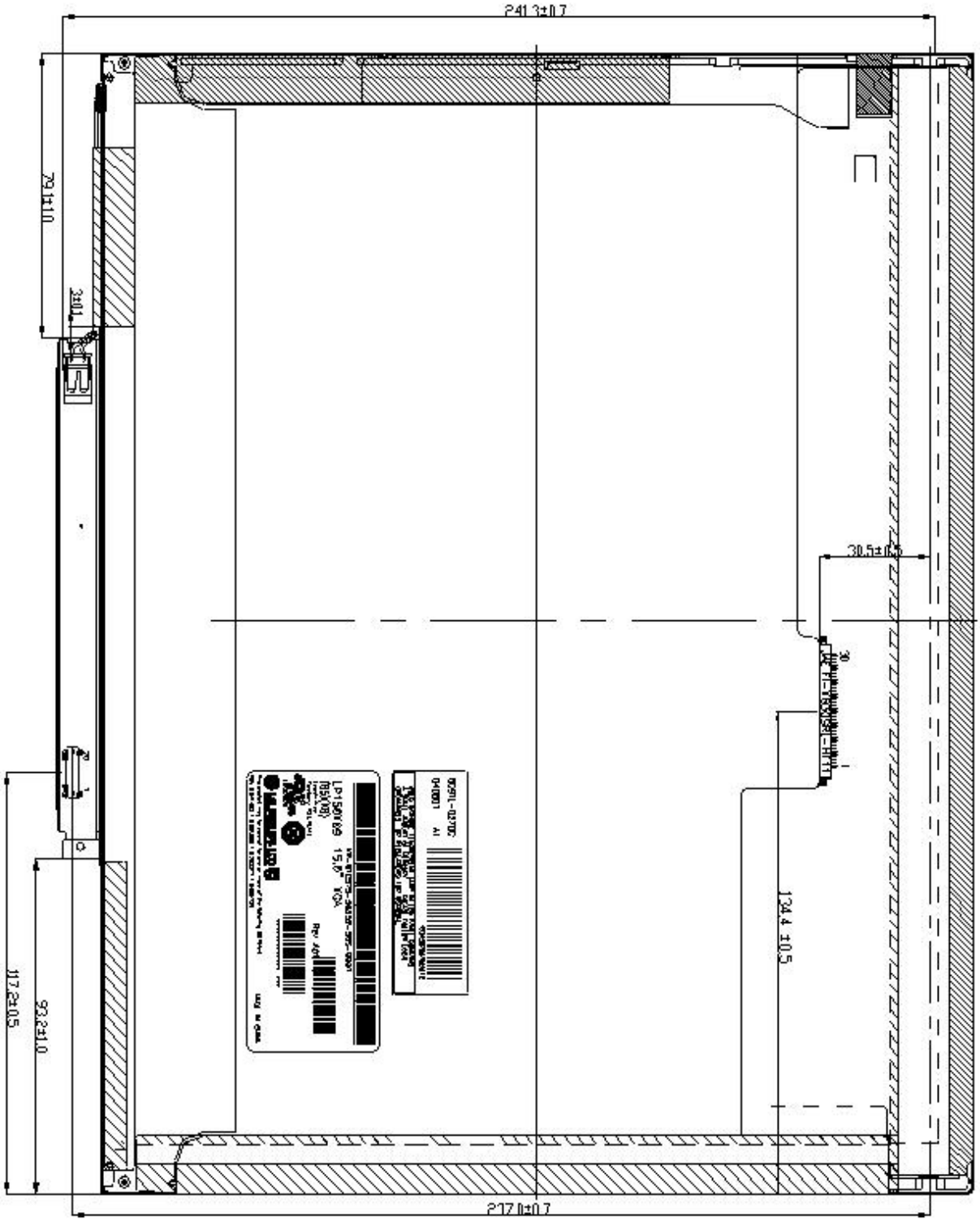

[DETAIL DESCRIPTION OF SIDE MOUNTING SCREW]

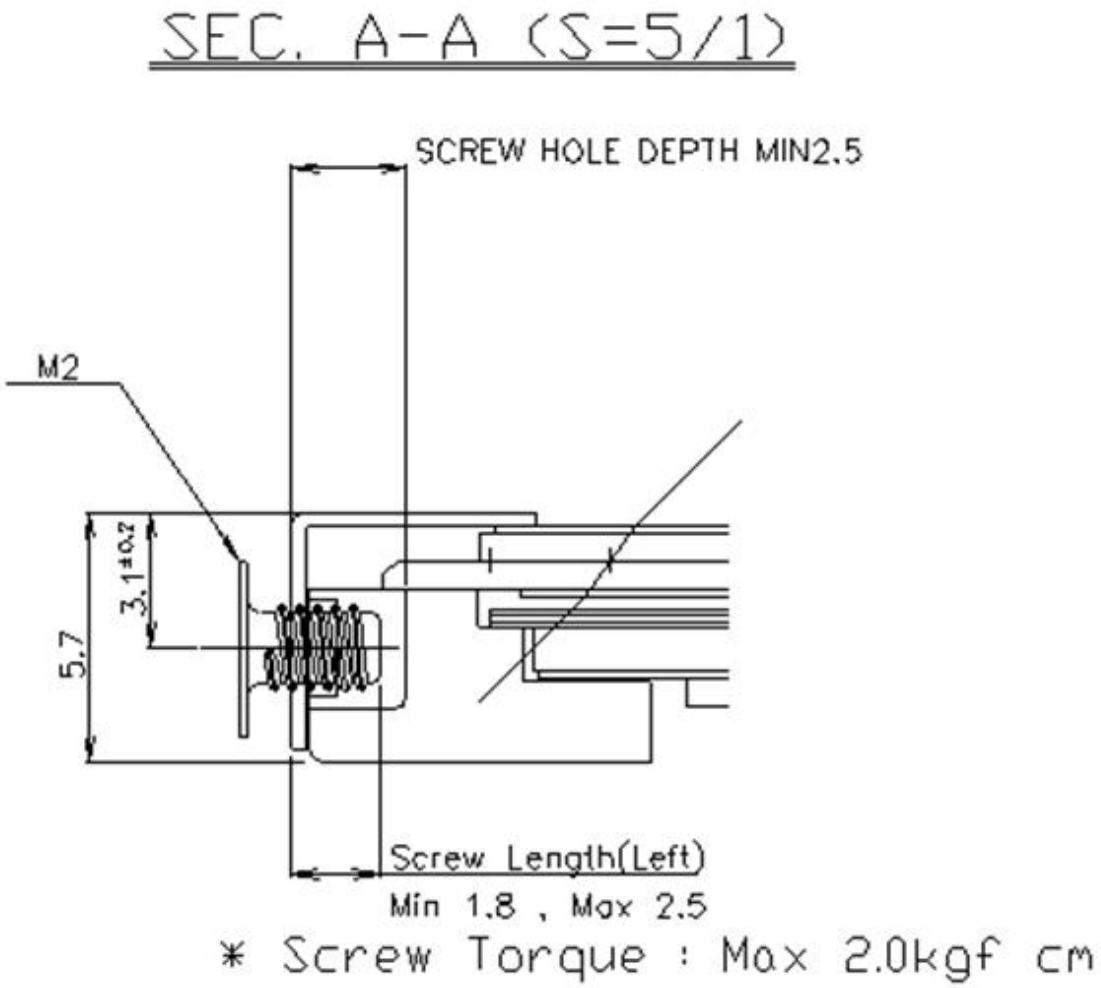

6. Reliability

Environment test condition

No.	Test Item	Conditions
1	High temperature storage test	Ta= 60°C, 240h
2	Low temperature storage test	Ta= -20°C, 240h
3	High temperature operation test	Ta= 50°C, 50%RH, 240h
4	Low temperature operation test	Ta= 0°C, 240h
5	Vibration test (non-operating)	Sine wave, 10 ~ 500 ~ 10Hz, 1.5G, 0.37oct/min 3 axis, 1hour/axis
6	Shock test (non-operating)	Half sine wave, 180G, 2ms one shock of each six faces(I.e. run 180G 2ms for all six faces)
7	Altitude operating storage / shipment	0 ~ 10,000 feet (3,048m) 24Hr 0 ~ 40,000 feet (12,192m) 24Hr

{ Result Evaluation Criteria }
There should be no change which might affect the practical display function when the display quality test is conducted under normal operating condition.

7. International Standards

7-1. Safety

a) UL 60950-1:2003, First Edition, Underwriters Laboratories, Inc.,
Standard for Safety of Information Technology Equipment.
b) CAN/CSA C22.2, No. 60950-1-03 1st Ed. April 1, 2003, Canadian Standards Association,
Standard for Safety of Information Technology Equipment.
c) EN 60950-1:2001, First Edition,
European Committee for Electrotechnical Standardization(CENELEC)
European Standard for Safety of Information Technology Equipment.

7-2. EMC

a) ANSI C63.4 "Methods of Measurement of Radio-Noise Emissions from Low-Voltage Electrical and Electrical Equipment in the Range of 9kHZ to 40GHz. "American National Standards Institute(ANSI), 1992
b) C.I.S.P.R "Limits and Methods of Measurement of Radio Interface Characteristics of Information Technology Equipment." International Special Committee on Radio Interference.
c) EN 55022 "Limits and Methods of Measurement of Radio Interface Characteristics of Information Technology Equipment." European Committee for Electrotechnical Standardization.(CENELEC), 1998 (Including A1: 2000)

8. Packing

8-1. Designation of Lot Mark

a) Lot Mark

A	B	C	D	E	F	G	H	I	J	K	L	M

A,B,C : Inch
D : Year
E : Month
F : Panel Code
G : Factory Code
H : Assembly Code
I,J,K,L,M : Serial No

Note

1. Year

Year	97	98	99	2000	2001	2002	2003	2004	2005	2006	2007
Mark	7	8	9	0	1	2	3	4	5	6	7

2. Month

Month	Jan	Feb	Mar	Apr	May	Jun	Jul	Aug	Sep	Oct	Nov	Dec
Mark	1	2	3	4	5	6	7	8	9	A	B	C

3. Panel Code

Panel Code	P1 Factory	P2 Factory	P3 Factory	P4 Factory	P5 Factory	Hydis Panel
Mark	1	2	3	4	5	H

4. Factory Code

Factory Code	LPL Gumi	LPL Nanjing	HEE SUNG
Mark	K	C	D

5. Serial No

Serial No.	1 ~ 99,999	100,000 ~
Mark	00001 ~ 99999	A0001 ~ A9999, - - - - , Z9999

b) Location of Lot Mark
Serial NO. is printed on the label. The label is attached to the backside of the LCD module.
This is subject to change without prior notice.

8-2. Packing Form

a) Package quantity in one box : 12pcs
b) Box Size : 376mm × 321mm × 317mm

9. PRECAUTIONS

Please pay attention to the followings when you use this TFT LCD module.

9-1. MOUNTING PRECAUTIONS

(1) You must mount a module using holes arranged in four corners or four sides.
(2) You should consider the mounting structure so that uneven force (ex. Twisted stress) is not applied to the module. And the case on which a module is mounted should have sufficient strength so that external force is not transmitted directly to the module.
(3) Please attach the surface transparent protective plate to the surface in order to protect the polarizer. Transparent protective plate should have sufficient strength in order to the resist external force.
(4) You should adopt radiation structure to satisfy the temperature specification.
(5) Acetic acid type and chlorine type materials for the cover case are not desirable because the former generates corrosive gas of attacking the polarizer at high temperature and the latter causes circuit break by electro-chemical reaction.
(6) Do not touch, push or rub the exposed polarizer with glass, tweezers or anything harder than HB pencil lead. And please do not rub with dust clothes with chemical treatment.
Do not touch the surface of polarizer for bare hand or greasy cloth.(Some cosmetics are detrimental to the polarizer.)
(7) When the surface becomes dusty, please wipe gently with absorbent cotton or other soft materials like chamois soaks with petroleum benzene. Normal-hexane is recommended for cleaning the adhesives used to attach front / rear polarizer. Do not use acetone, toluene and alcohol because they cause chemical damage to the polarizer.
(8) Wipe off saliva or water drops as soon as possible. Their long time contact with polarizer causes deformations and color fading.
(9) Do not open the case because inside circuits do not have sufficient strength.

9-2. OPERATING PRECAUTIONS

(1) The spike noise causes the mis-operation of circuits. It should be lower than following voltage :
V=± 200mV(Over and under shoot voltage)

(2) Response time depends on the temperature.(In lower temperature, it becomes longer.)
(3) Brightness depends on the temperature. (In lower temperature, it becomes lower.)
And in lower temperature, response time(required time that brightness is stable after turned on) becomes longer.
(4) Be careful for condensation at sudden temperature change. Condensation makes damage to polarizer or electrical contacted parts. And after fading condensation, smear or spot will occur.
(5) When fixed patterns are displayed for a long time, remnant image is likely to occur.
(6) Module has high frequency circuits. Sufficient suppression to the electromagnetic interference shall be done by system manufacturers. Grounding and shielding methods may be important to minimized the interference.

9-3. ELECTROSTATIC DISCHARGE CONTROL

Since a module is composed of electronic circuits, it is not strong to electrostatic discharge. Make certain that treatment persons are connected to ground through wrist band etc. And don't touch interface pin directly.

9-4. PRECAUTIONS FOR STRONG LIGHT EXPOSURE

Strong light exposure causes degradation of polarizer and color filter.

9-5. STORAGE

When storing modules as spares for a long time, the following precautions are necessary.

(1) Store them in a dark place. Do not expose the module to sunlight or fluorescent light. Keep the temperature between 5°C and 35°C at normal humidity.
(2) The polarizer surface should not come in contact with any other object.
It is recommended that they be stored in the container in which they were shipped.

9-6. HANDLING PRECAUTIONS FOR PROTECTION FILM

(1) When the protection film is peeled off, static electricity is generated between the film and polarizer. This should be peeled off slowly and carefully by people who are electrically grounded and with well ion-blown equipment or in such a condition, etc.
(2) The protection film is attached to the polarizer with a small amount of glue. If some stress is applied to rub the protection film against the polarizer during the time you peel off the film, the glue is apt to remain on the polarizer.
Please carefully peel off the protection film without rubbing it against the polarizer.
(3) When the module with protection film attached is stored for a long time, sometimes there remains a very small amount of glue still on the polarizer after the protection film is peeled off.
(4) You can remove the glue easily. When the glue remains on the polarizer surface or its vestige is recognized, please wipe them off with absorbent cotton waste or other soft material like chamois soaked with normal-hexane.

APPENDIX A. Enhanced Extended Display Identification Data (EEDID™) 1/3

Byte dec.	Byte hex.	Field Name and Comments	Value (HEX)		Value (binary)	
0	00	Header	0	0	0000 0000	Header
1	01	Header	F	F	1111 1111	
2	02	Header	F	F	1111 1111	
3	03	Header	F	F	1111 1111	
4	04	Header	F	F	1111 1111	
5	05	Header	F	F	1111 1111	
6	06	Header	F	F	1111 1111	
7	07	Header	0	0	0000 0000	
8	08	EISA manufacturer code(3 Character ID) = "LPL"	3	2	0011 0010	Vender/ Product ID
9	09	Compressed ASCII	0	C	0000 1100	
10	0A	Product code = 00	0	0	0000 0000	
11	0B	(Hex, LSB first)	0	0	0000 0000	
12	0C	LCD Module Serial No. = 0 (If not used)	0	0	0000 0000	
13	0D	LCD Module Serial No. = 0 (If not used)	0	0	0000 0000	
14	0E	LCD Module Serial No. = 0 (If not used)	0	0	0000 0000	
15	0F	LCD Module Serial No. = 0 (If not used)	0	0	0000 0000	
16	10	Week of Manufacture = 00	0	0	0000 0000	
17	11	Year of Manufacture = "2005"	0	F	0000 1111	
18	12	EDID Structure version # = "1"	0	1	0000 0001	EDID Version/ Revision
19	13	EDID Revision # = "3"	0	3	0000 0011	
20	14	Video Input Definition = Digital I/P,non TMDS CRGB	8	0	1000 0000	Display Parameter
21	15	Max H image size(cm)=30.4128cm(30)	1	E	0001 1110	
22	16	Max V image size(cm)=22.8096cm(23)	1	7	0001 0111	
23	17	Display gamma = "2.2"	7	8	0111 1000	
24	18	Feature support(DPMS) = Active off, RGB Color	0	A	0000 1010	
25	19	Red/Green low Bits	0	8	0000 1000	Color Characteristic
26	1A	Blue/White Low Bits	2	0	0010 0000	
27	1B	Red X Rx = 0.590	9	7	1001 0111	
28	1C	Red Y Ry = 0.340	5	7	0101 0111	
29	1D	Green X Gx = 0.323	5	2	0101 0010	
30	1E	Green Y Gy = 0.532	8	8	1000 1000	
31	1F	Blue X Bx =0.157	2	8	0010 1000	
32	20	Blue Y By = 0.135	2	2	0010 0010	
33	21	White X Wx =0.313	5	0	0101 0000	
34	22	White Y Wy = 0.329	5	4	0101 0100	
35	23	Established Timing I = 00h(If not used)	0	0	0000 0000	Established Timings
36	24	Established Timing II = 00h(If not used)	0	0	0000 0000	
37	25	Manufacturer's Timings = 00h(If not used)	0	0	0000 0000	
38	26	Standard Timing Identification 1 was not used	0	1	0000 0001	Standard Timing ID
39	27	Standard Timing Identification 1 was not used	0	1	0000 0001	
40	28	Standard Timing Identification 2 was not used	0	1	0000 0001	
41	29	Standard Timing Identification 2 was not used	0	1	0000 0001	
42	2A	Standard Timing Identification 3 was not used	0	1	0000 0001	
43	2B	Standard Timing Identification 3 was not used	0	1	0000 0001	
44	2C	Standard Timing Identification 4 was not used	0	1	0000 0001	
45	2D	Standard Timing Identification 4 was not used	0	1	0000 0001	
46	2E	Standard Timing Identification 5 was not used	0	1	0000 0001	
47	2F	Standard Timing Identification 5 was not used	0	1	0000 0001	
48	30	Standard Timing Identification 6 was not used	0	1	0000 0001	
49	31	Standard Timing Identification 6 was not used	0	1	0000 0001	
50	32	Standard Timing Identification 7 was not used	0	1	0000 0001	
51	33	Standard Timing Identification 7 was not used	0	1	0000 0001	
52	34	Standard Timing Identification 8 was not used	0	1	0000 0001	
53	35	Standard Timing Identification 8 was not used	0	1	0000 0001	

APPENDIX A. Enhanced Extended Display Identification Data (EEDID™) 2/3

Byte dec.	Byte hex.	Field Name and Comments	Value (HEX)		Value (binary)	
54	36	Pixel Clock/10,000 (LSB)	6	4	0110 0100	Timing Descriptor #1
55	37	Pixel Clock/10,000 (MSB) / 1024 x 768 @ 60Hz pixel clock = 65.00MHz	1	9	0001 1001	
56	38	Horizontal Active = 1024 pixels	0	0	0000 0000	
57	39	Horizontal Blanking = 320 pixels	4	0	0100 0000	
58	3A	Horizontal Active : Horizontal Blanking	4	1	0100 0001	
59	3B	Vertical Avtive = 768 lines	0	0	0000 0000	
60	3C	Vertical Blanking = 38 lines	2	6	0010 0110	
61	3D	Vertical Active : Vertical Blanking	3	0	0011 0000	
62	3E	Horizontal Sync. Offset = 24 pixels	1	8	0001 1000	
63	3F	Horizontal Sync Pulse Width = 136 pixels	8	8	1000 1000	
64	40	Vertical Sync Offset = 3 lines : Sync Width = 6 lines	3	6	0011 0110	
65	41	Horizontal Vertical Sync Offset/Width upper 2bits = 0	0	0	0000 0000	
66	42	Horizontal Image Size = 304.128 mm(304)	3	0	0011 0000	
67	43	Vertical Image Size = 228.096 mm(228)	E	4	1110 0100	
68	44	Horizontal & Vertical Image Size	1	0	0001 0000	
69	45	Horizontal Border = 0	0	0	0000 0000	
70	46	Vertical Border = 0	0	0	0000 0000	
71	47	Non-Interlaced,Normal display,no stereo,Digital separate sync,H/V pol negatives	1	8	0001 1000	
72	48	Pixel Clock/10,000 (LSB)	6	4	0110 0100	Timing Description #2
73	49	Pixel Clock/10,000 (MSB) / 1024 x 768 @ 60Hz pixel clock = 65.00MHz	1	9	0001 1001	
74	4A	Horizontal Active = 1024 pixels	0	0	0000 0000	
75	4B	Horizontal Blanking = 320 pixels	4	0	0100 0000	
76	4C	Horizontal Active : Horizontal Blanking	4	1	0100 0001	
77	4D	Vertical Avtive = 768 lines	0	0	0000 0000	
78	4E	Vertical Blanking = 38 lines	2	6	0010 0110	
79	4F	Vertical Active : Vertical Blanking	3	0	0011 0000	
80	50	Horizontal Sync. Offset = 24 pixels	1	8	0001 1000	
81	51	Horizontal Sync Pulse Width = 136 pixels	8	8	1000 1000	
82	52	Vertical Sync Offset = 3 lines : Sync Width = 6 lines	3	6	0011 0110	
83	53	Horizontal Vertical Sync Offset/Width upper 2bits = 0	0	0	0000 0000	
84	54	Horizontal Image Size = 304.128 mm(304)	3	0	0011 0000	
85	55	Vertical Image Size = 228.096 mm(228)	E	4	1110 0100	
86	56	Horizontal & Vertical Image Size	1	0	0001 0000	
87	57	Horizontal Border = 0	0	0	0000 0000	
88	58	Vertical Border = 0	0	0	0000 0000	
89	59	**Module "A" Revision (Example : 00, 01, 02, 03, etc.) = 00**	0	0	0000 0000	
90	5A	Flag	0	0	0000 0000	Timing Description #3
91	5B	Flag	0	0	0000 0000	
92	5C	Flag	0	0	0000 0000	
93	5D	Dummy Descriptor	F	E	1111 1110	
94	5E	Flag	0	0	0000 0000	
95	5F	Dell P/N 1st Character = "T"	5	4	0101 0100	
96	60	Dell P/N 2nd Character = "C"	4	C	0100 1100	
97	61	Dell P/N 3rd Character = "5"	3	5	0011 0101	
98	62	Dell P/N 4th Character = "7"	3	7	0011 0111	
99	63	Dell P/N 5th Character = "5"	3	5	0011 0101	
100	64	LCD Supplier EEDID Revision # = 0.0	0	0	0000 0000	
101	65	Manufacturer P/N = "1"	3	1	0011 0001	
102	66	Manufacturer P/N = "5"	3	5	0011 0101	
103	67	Manufacturer P/N = "0"	3	0	0011 0000	
104	68	Manufacturer P/N = "X"	5	8	0101 1000	
105	69	Manufacturer P/N = "0"	3	0	0011 0000	
106	6A	Manufacturer P/N = "9"	3	9	0011 1001	
107	6B	Manufacturer P/N(If <13 char, then terminate with ASCII code 0Ah, set remaining char = 20h	0	A	0000 1010	

APPENDIX A. Enhanced Extended Display Identification Data (EEDID™) 3/3

Byte dec.	Byte hex	Field Name and Comments	Value (HEX)		Value (binary)	
108	6C	Flag	0	0	0000 0000	Timing Description #4
109	6D	Flag	0	0	0000 0000	
110	6E	Flag	0	0	0000 0000	
111	6F	Data Type Tag : ASCII String	F	E	1111 1110	
112	70	Flag	0	0	0000 0000	
113	71	SMBUS Value = 10nits	D	8	1101 1000	
114	72	SMBUS Value = 17nits	C	8	1100 1000	
115	73	SMBUS Value = 24 nits	B	8	1011 1000	
116	74	SMBUS Value = 30 nits	B	0	1011 0000	
117	75	SMBUS Value = 60 nits	8	8	1000 1000	
118	76	SMBUS Value = 110 nits	6	0	0110 0000	
119	77	SMBUS Value = 150 nits	4	8	0100 1000	
120	78	SMBUS Value = 180 nits	2	8	0010 1000	
121	79	Number of LVDS receiver chips = 1 or 2	0	1	0000 0001	
122	7A	Bist Enable: Yes = ' 01', No = ' 00'	0	1	0000 0001	
123	7B	(If<13 char, then terminate with ASCII code 0Ah, set remaining char=20h	0	A	0000 1010	
124	7C	(If<13 char, then terminate with ASCII code 0Ah)	2	0	0010 0000	
125	7D	(If<13 char, then terminate with ASCII code 0Ah)	2	0	0010 0000	
126	7E	Extension flag = 00	0	0	0000 0000	Extension Flag
127	7F	Checksum	9	2	1001 0010	Checksum