SPECIFICATION
FOR
APPROVAL

(●) **Preliminary Specification**
( ) **Final Specification**

Title	15.4” WXGA TFT LCD

BUYER	DELL
MODEL	

SUPPLIER	LG.Philips LCD Co., Ltd.
*MODEL	LP154W01
Suffix	TLF2

*When you obtain standard approval,
please use the above model name without suffix

APPROVED BY	SIGNATURE
/	
/	
/	

Please return 1 copy for your confirmation with your signature and comments.

APPROVED BY	SIGNATURE
J. H. Lee / S.Manager	
REVIEWED BY	
S.R.Kim / Manager	
PREPARED BY	
B.H.Kim / Engineer	

Product Engineering Dept.
LG. Philips LCD Co., Ltd

Contents

RECORD OF REVISIONS

Revision No	Revision Date	Page	Description	EDID ver
0.0	Jun .26., 2006	-	First Draft	0.0
0.1	Oct. 02, 2006	18	Revision Explanation Added	
0.2	Jan.26, 2007	8,9,12,22,25~27	Update BACKLIGHT CONNECTOR PIN CONFIGURATION, Timing, Color Coordinates, Packing, EDID	0.0

1. General Description

The LP154W01 is a Color Active Matrix Liquid Crystal Display with an integral Cold Cathode Fluorescent Lamp (CCFL) backlight system. The matrix employs a-Si Thin Film Transistor as the active element. It is a transmissive type display operating in the normally white mode. This TFT-LCD has 15.4 inches diagonally measured active display area with WXGA resolution(1280 horizontal by 800 vertical pixel array). Each pixel is divided into Red, Green and Blue sub-pixels or dots which are arranged in vertical stripes. Gray scale or the brightness of the sub-pixel color is determined with a 6-bit gray scale signal for each dot, thus, presenting a palette of more than 262,144 colors.

The LP154W01 has been designed to apply the interface method that enables low power, high speed, low EMI.

The LP154W01 is intended to support applications where thin thickness, low power are critical factors and graphic displays are important. In combination with the vertical arrangement of the sub-pixels, the LP154W01(TLF2) characteristics provide an excellent flat display for office automation products such as Notebook PC.

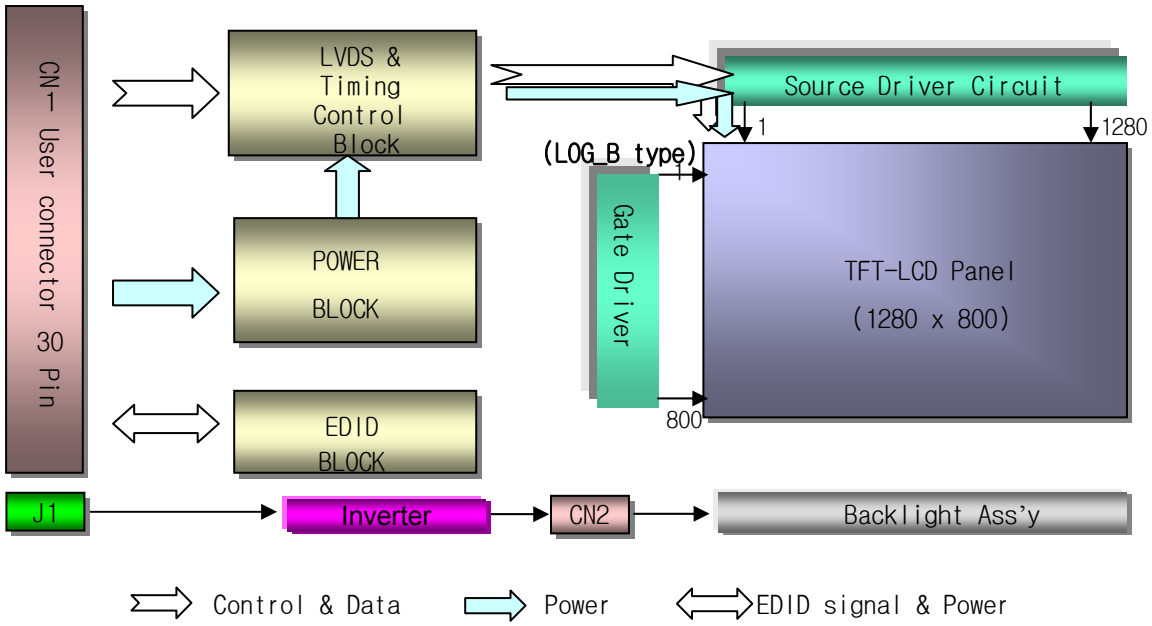

General Features

Active Screen Size	15.4 inches diagonal
Outline Dimension	344.0 (H) × 222.0 (V) × 6.5(D, max) mm
Pixel Pitch	0.25875 mm × 0.25875 mm
Pixel Format	1280 horiz. by 800 vert. Pixels RGB strip arrangement
Color Depth	6-bit, 262,144 colors
Luminance, White	200 cd/m^2(Min.) , 5 point
Power Consumption	Total 5.82 Watt(Typ.) @ LCM circuit 1.4Watt(Typ.), B/L input 4.42 Watt(Typ.)
Weight	550g (Typ) w/o inverter
Display Operating Mode	Transmissive mode, normally white
Surface Treatment	Glare(2H)

2. Absolute Maximum Ratings

The following are maximum values which, if exceeded, may cause faulty operation or damage to the unit.

Table 1. ABSOLUTE MAXIMUM RATINGS

Parameter	Symbol	Values		Units	Notes
		Min	Max		
Power Input Voltage	VCC	-0.3	4.0	Vdc	at 25 ± 5°C
Operating Temperature	TOP	0	50	°C	1
Storage Temperature	HST	-20	60	°C	1
Operating Ambient Humidity	HOP	10	90	%RH	1
Storage Humidity	HST	10	90	%RH	1

Note : 1. Temperature and relative humidity range are shown in the figure below.
Wet bulb temperature should be 39°C Max, and no condensation of water.

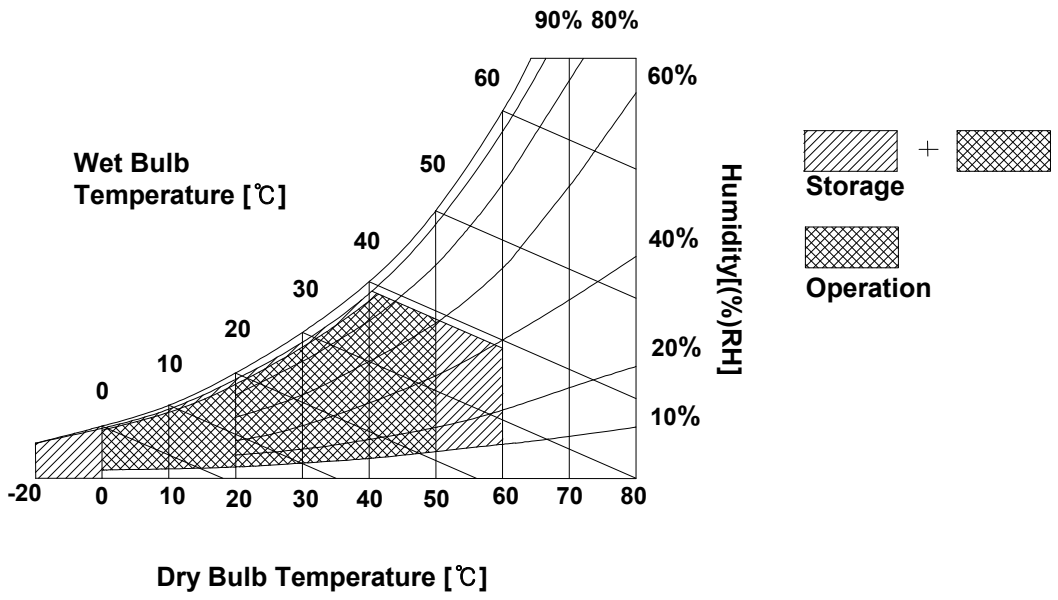

3. Electrical Specifications

3-1. Electrical Characteristics

The LP154W01(TLF2)requires two power inputs. One is employed to power the LCD electronics and to drive the TFT array and liquid crystal. The second input which powers the CCFL, is typically generated by an inverter. The inverter is an external unit to the LCD.

Table 2. ELECTRICAL CHARACTERISTICS

Parameter	Symbol	Values			Unit	Notes
		Min	Typ	Max		
MODULE :						
Power Supply Input Voltage	VCC	3.0	3.3	3.6	V_{DC}	
Power Supply Input Current	I_{CC}	360	420	480	mA	1
Power Consumption	Pc	-	1.4	1.6	Watt	1
Differential Impedance	Zm	90	100	110	Ohm	2
LAMP :						
Operating Voltage	V_{BL}	670 (6.8mA)	680 (6.5mA)	835 (3.0mA)	V_{RMS}	3
Operating Current	I_{BL}	3.0	6.5	6.8	mA_{RMS}	4
Power Consumption	P_{BL}	-	4.42	4.73		9
Operating Frequency	f_{BL}	45	60	80	kHz	7
Discharge Stabilization Time	Ts	-	-	3	Min	5
Life Time		15,000	-	-	Hrs	6
Established Starting Voltage at 25℃ at 0 ℃	Vs			 1170 1400	 V_{RMS} V_{RMS}	8

Note)

1. The specified current and power consumption are under the Vcc = 3.3V , 25℃, fv = 60Hz condition whereas full black pattern is displayed and fv is the frame frequency.
2. This impedance value is needed to proper display and measured form LVDS Tx to the mating connector.
3. The variance of the voltage is ± 10%.
4. The typical operating current is for the typical surface luminance (L_{WH}) in optical characteristics.
5. Define the brightness of the lamp after being lighted for 5 minutes as 100%, Ts is the time required for the brightness of the center of the lamp to be not less than 95%.
6. The life time is determined as the time at which brightness of lamp is 50% compare to that of initial value at the typical lamp current.
7. The output of the inverter must have symmetrical(negative and positive) voltage waveform and symmetrical current waveform.(Asymmetrical ratio is less than 10%) Please do not use the inverter which has asymmetrical voltage and asymmetrical current and spike wave.
   Lamp frequency may produce interface with horizontal synchronous frequency and as a result this may cause beat on the display. Therefore lamp frequency shall be as away possible from the horizontal synchronous frequency and from its harmonics in order to prevent interference.
8. The voltage above VS should be applied to the lamps for more than 1 second for start-up. Otherwise, the lamps may not be turned on. The used lamp current is the lamp typical current.
9. The lamp power consumption shown above does not include loss of external inverter.
   The applied lamp current is a typical one.

Note)

9. Requirements for a system inverter design, which is intended to have a better display performance, a better power efficiency and a more reliable lamp, are following.
   It shall help increase the lamp lifetime and reduce leakage current.
   a. The asymmetry rate of the inverter waveform should be less than 10%.
   b. The distortion rate of the waveform should be within √2 ±10%.
      * Inverter output waveform had better be more similar to ideal sine wave.

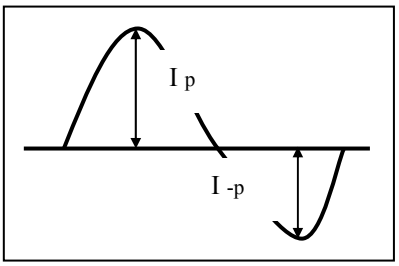

* Asymmetry rate:

$| I_p - I_{-p} | / I_{rms} * 100\%$

* Distortion rate

I_p (or I_{-p}) / I_{rms}

※ Do not attach a conducting tape to lamp connecting wire.
If the lamp wire attach to a conducting tape, TFT-LCD Module has a low luminance and the inverter has abnormal action. Because leakage current is occurred between lamp wire and conducting tape.

3-2. Interface Connections

This LCD employs two interface connections, a 30 pin connector is used for the module electronics interface and the other connector is used for the integral backlight system.
The electronics interface connector is a model MDF76LBRW-30S-1H manufactured by Hirose.

Table 3. MODULE CONNECTOR PIN CONFIGURATION (CN1)

Pin	Symbol	Description	Notes
1	GND	Ground	1, Interface chips 1.1 LCD : KE5M5U2518(LCD Controller) including LVDS Receiver 1.2 System : THC63LVD63A or equivalent * Pin to Pin compatible with S/W LVDS 2. Connector 2.1 LCD : MDF76LBRW-30S-1H,Hirose or FI-XB30SRL-HF11, JAE equivalent. Locking design 2.2 Mating : FI-X30M or equivalent. 2.3 Connector pin arrangement 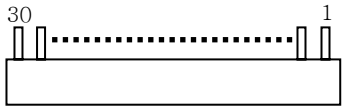 [LCD Module Rear View]
2	VCC	Power Supply, 3.3V Typ.	
3	VCC	Power Supply, 3.3V Typ.	
4	V EEDID	DDC 3.3V power	
5	NC	Reserved for supplier test point	
6	Clk EEDID	DDC Clock	
7	DATA EEDID	DDC Data	
8	R_{IN} 0-	Negative LVDS differential data input	
9	R_{IN} 0+	Positive LVDS differential data input	
10	GND	Ground	
11	R_{IN} 1-	Negative LVDS differential data input	
12	R_{IN} 1+	Positive LVDS differential data input	
13	GND	Ground	
14	R_{IN} 2-	Negative LVDS differential data input	
15	R_{IN} 2+	Positive LVDS differential data input	
16	GND	Ground	
17	CLKIN-	Negative LVDS differential clock input	
18	CLKIN+	Negative LVDS differential clock input	
19	GND	Ground	
20	NC	No connect	
21	NC	No connect	
22	NC	No connect	
23	NC	No connect	
24	NC	No connect	
25	NC	No connect	
26	NC	No connect	
27	NC	No connect	
28	NC	No connect	
29	NC	No connect	
30	NC	No connect	

The backlight interface connector is a model BHSR-02VS-1, manufactured by JST or Compatible.
The mating connector part number is SM02B-BHSS-1 or equivalent.

Table 5. BACKLIGHT CONNECTOR PIN CONFIGURATION (J3)

Pin	Symbol	Description	Notes
1	HV	Power supply for lamp (High voltage side)	1
2	LV	Power supply for lamp (Low voltage side)	1

Notes : 1. The high voltage side terminal is colored Dark Gray and the low voltage side terminal is yellow.

3-3. Signal Timing Specifications

This is the signal timing required at the input of the User connector. All of the interface signal timing should be satisfied with the following specifications and specifications of LVDS Tx/Rx for its proper operation.

Table 6. TIMING TABLE

ITEM	Symbol		Min	Typ	Max	Unit	Note
DCLK	Frequency	f_{CLK}	66.9	72.25	75.4	MHz	
Hsync	Period	t_{HP}	1380	1440	1496	t_{CLK}	
	Width	t_{WH}	16	32	40		
	Active	t_{WHA}	1280	1280	1280		
Vsync	Period	t_{VP}	808	823	840	t_{HP}	
	Width	t_{WV}	2	6	10		
	Active	t_{WVA}	800	800	800		
Data Enable	Horizontal back porch	t_{HBP}	68	80	120	t_{CLK}	
	Horizontal front porch	t_{HFP}	16	48	56		
	Vertical back porch	t_{VBP}	5	15	24	t_{HP}	
	Vertical front porch	t_{VFP}	1	2	6		

3-4. Signal Timing Waveforms

Condition : VCC =3.3V

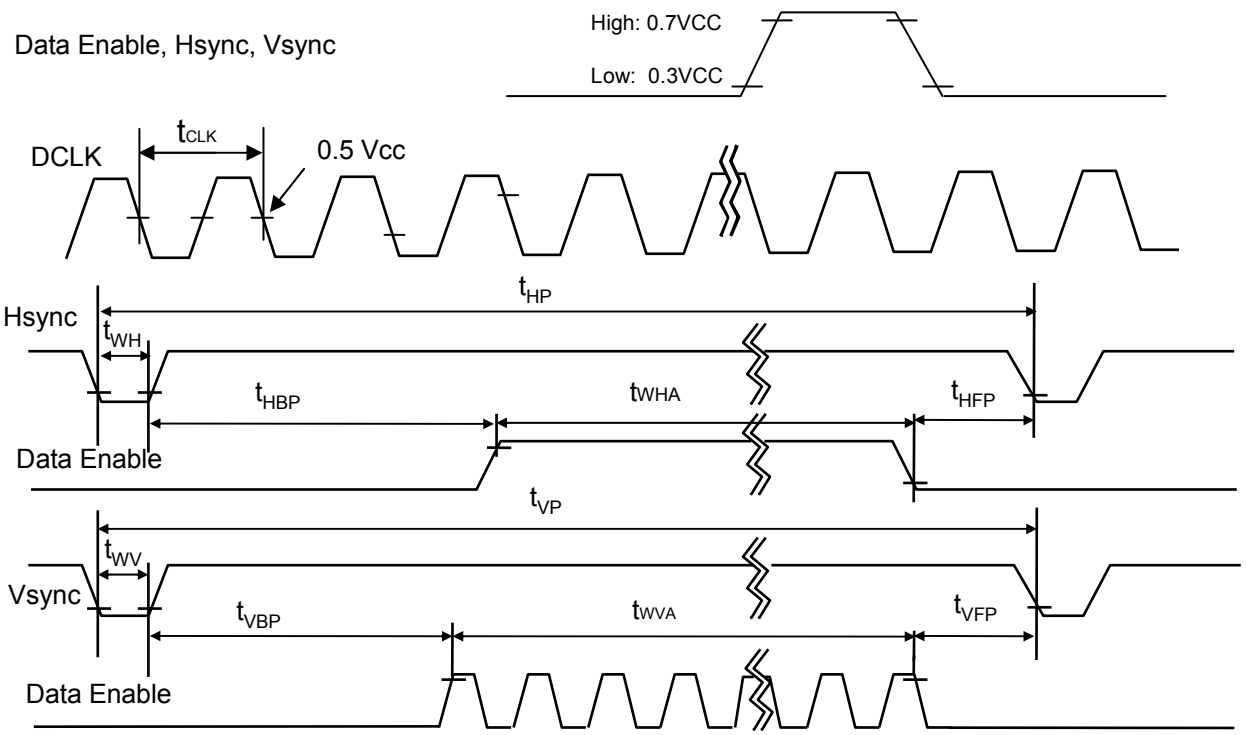

3-5. Color Input Data Reference

The brightness of each primary color (red,green and blue) is based on the 6-bit gray scale data input for the color ; the higher the binary input, the brighter the color. The table below provides a reference for color versus data input.

Table 7. COLOR DATA REFERENCE

Color		Input Color Data																	
		RED						GREEN						BLUE					
		MSB					LSB	MSB					LSB	MSB					LSB
		R 5	R 4	R 3	R 2	R 1	R 0	G 5	G 4	G 3	G 2	G 1	G 0	B 5	B 4	B 3	B 2	B 1	B 0
Basic Color	Black	0	0	0	0	0	0	0	0	0	0	0	0	0	0	0	0	0	0
	Red	1	1	1	1	1	1	0	0	0	0	0	0	0	0	0	0	0	0
	Green	0	0	0	0	0	0	1	1	1	1	1	1	0	0	0	0	0	0
	Blue	0	0	0	0	0	0	0	0	0	0	0	0	1	1	1	1	1	1
	Cyan	0	0	0	0	0	0	1	1	1	1	1	1	1	1	1	1	1	1
	Magenta	1	1	1	1	1	1	0	0	0	0	0	0	1	1	1	1	1	1
	Yellow	1	1	1	1	1	1	1	1	1	1	1	1	0	0	0	0	0	0
	White	1	1	1	1	1	1	1	1	1	1	1	1	1	1	1	1	1	1
RED	RED (00)	0	0	0	0	0	0	0	0	0	0	0	0	0	0	0	0	0	0
	RED (01)	0	0	0	0	0	1	0	0	0	0	0	0	0	0	0	0	0	0
	…	…						…						…					
	RED (62)	1	1	1	1	1	0	0	0	0	0	0	0	0	0	0	0	0	0
	RED (63)	1	1	1	1	1	1	0	0	0	0	0	0	0	0	0	0	0	0
GREEN	GREEN (00)	0	0	0	0	0	0	0	0	0	0	0	0	0	0	0	0	0	0
	GREEN (01)	0	0	0	0	0	0	0	0	0	0	0	1	0	0	0	0	0	0
	...	...						...						...					
	GREEN (62)	0	0	0	0	0	0	1	1	1	1	1	0	0	0	0	0	0	0
	GREEN (63)	0	0	0	0	0	0	1	1	1	1	1	1	0	0	0	0	0	0
BLUE	BLUE (00)	0	0	0	0	0	0	0	0	0	0	0	0	0	0	0	0	0	0
	BLUE (01)	0	0	0	0	0	0	0	0	0	0	0	0	0	0	0	0	0	1
	…	…						…						…					
	BLUE (62)	0	0	0	0	0	0	0	0	0	0	0	0	1	1	1	1	1	0
	BLUE (63)	0	0	0	0	0	0	0	0	0	0	0	0	1	1	1	1	1	1

3-6. Power Sequence

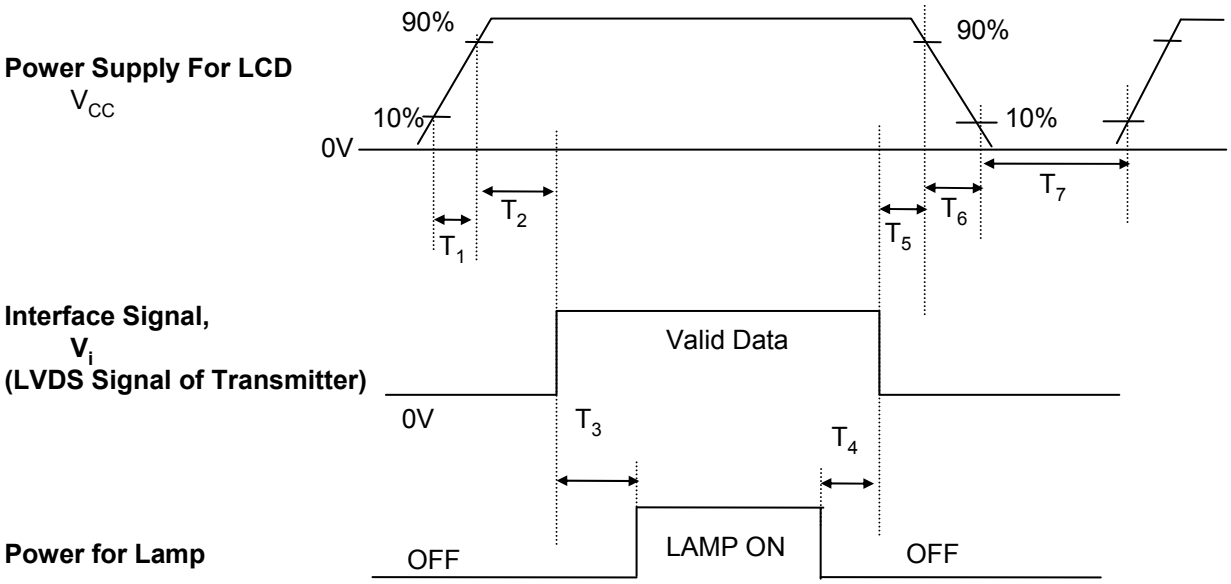

Table 8. POWER SEQUENCE TABLE

Parameter	Value			Units
	Min.	Typ.	Max.	
T_1	0.5	-	10	(ms)
T_2	0	-	50	(ms)
T_3	200	-	-	(ms)
T_4	200	-	-	(ms)
T_5	0	-	50	(ms)
T_6	0	-	10	(ms)
T_7	400	-	-	(ms)

Note)
1. Please avoid floating state of interface signal at invalid period.
2. When the interface signal is invalid, be sure to pull down the power supply for LCD VCC to 0V.
3. Lamp power must be turn on after power supply for LCD and interface signal are valid.

4. Optical Specification

Optical characteristics are determined after the unit has been 'ON' and stable for approximately 30 minutes in a dark environment at 25°C. The values specified are at an approximate distance 50cm from the LCD surface at a viewing angle of Φ and Θ equal to 0°.
FIG. 1 presents additional information concerning the measurement equipment and method.

FIG. 1 Optical Characteristic Measurement Equipment and Method

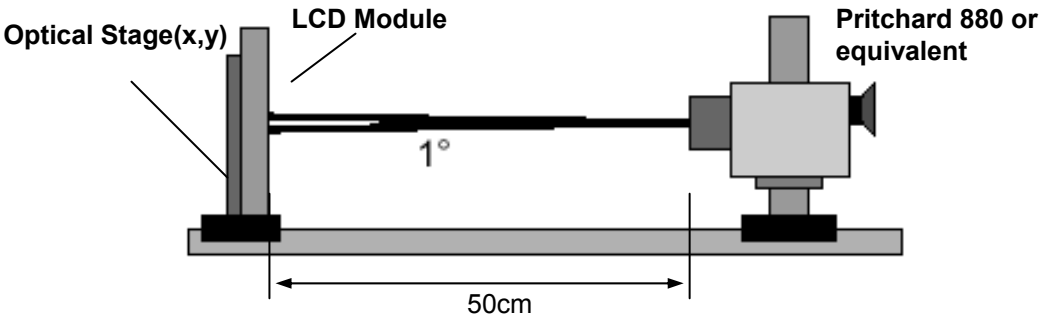

Table 9. OPTICAL CHARACTERISTICS

Ta=25°C, VCC=3.3V, fv=60.9Hz, f_{CLK}= 72.25MHz, Iout = 6.5mA

Parameter	Symbol	Values			Units	Notes
		Min	Typ	MAx		
Contrast Ratio	CR	300	-	-		1
Surface Luminance, white	L_{WH}	200	-	-	cd/m²	2
Luminance Variation	δ_{WHITE}	-	1.8	2.0		3
Response Time						4
Rise Time+Decay Time	$Tr_R + Tr_D$	-	16	25	ms	
Color Coordinates						±0.03
RED	RX	0.567	0.597	0.627		
	RY	0.317	0.347	0.377		
GREEN	GX	0.298	0.328	0.358		
	GY	0.520	0.550	0.580		
BLUE	BX	0.129	0.159	0.189		
	BY	0.108	0.138	0.168		
WHITE	WX	0.283	0.313	0.343		
	WY	0.299	0.329	0.359		
Viewing Angle						5
x axis, right(Φ=0°)	Θr	40	-	-	degree	
x axis, left (Φ=180°)	Θl	40	-	-	degree	
y axis, up (Φ=90°)	Θu	15	-	-	degree	
y axis, down (Φ=270°)	Θd	30	-	-	degree	
Gray Scale						6

Note)

1. Contrast Ratio(CR) is defined mathematically as

$$\text{Contrast Ratio} = \frac{\text{Surface Luminance with all white pixels}}{\text{Surface Luminance with all black pixels}}$$

2. Surface luminance is the 5point (1~5)average across the LCD surface 50cm from the surface with all pixels displaying white. For more information see FIG 2.
   When I_{BL}= 6.5mA, $L_{WH=}$200cd/m^2(min.)

3. Luminance % uniformity is measured for 13 point For more information see FIG 2.
   δ WHITE = Maximum(LN1,LN2, ….. LN13) ÷ Minimum(LN1,LN2, ….. LN13)

4. Response time is the time required for the display to transition from white to black (rise time, Tr_R) and from black to white(Decay Time, Tr_D). For additional information see FIG 3.

5. Viewing angle is the angle at which the contrast ratio is greater than 10. The angles are determined for the horizontal or x axis and the vertical or y axis with respect to the z axis which is normal to the LCD surface. For more information see FIG 4.

6. Gray scale specification * f_V=60Hz

Gray Level	Luminance [%] (Typ)
L0	0.1
L7	1.66
L15	6.16
L23	13.2
L31	22.3
L39	35.6
L47	53.1
L55	74.4
L63	100

FIG. 2 Luminance

<measuring point for surface luminance & measuring point for luminance variation>

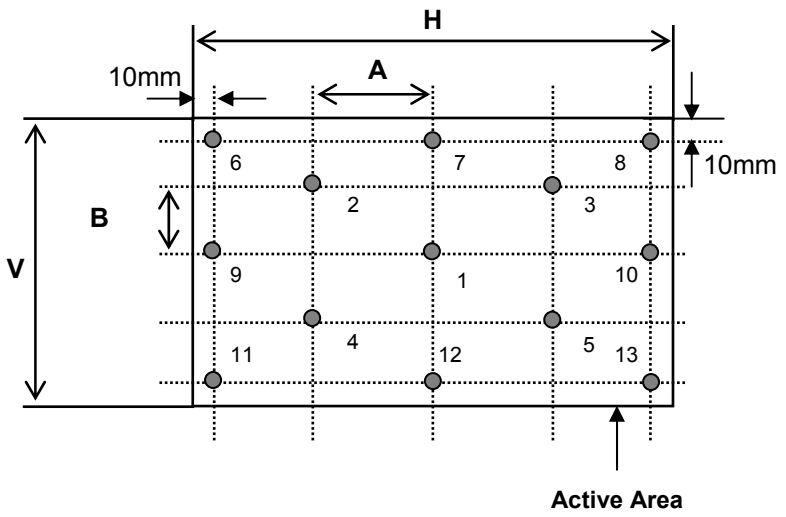

H,V : ACTIVE AREA
A : H/4 mm
B : V/4 mm
POINTS: 13 POINTS

FIG. 3 Response Time

The response time is defined as the following figure and shall be measured by switching the input signal for “black” and “white”.

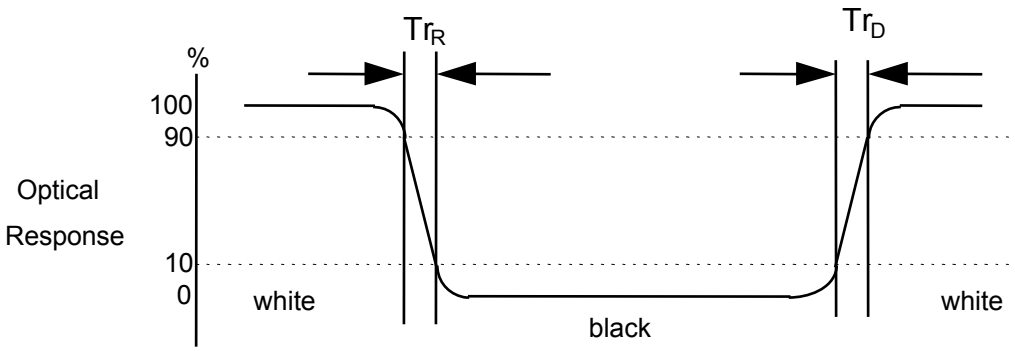

FIG. 4 Viewing angle

<Dimension of viewing angle range>

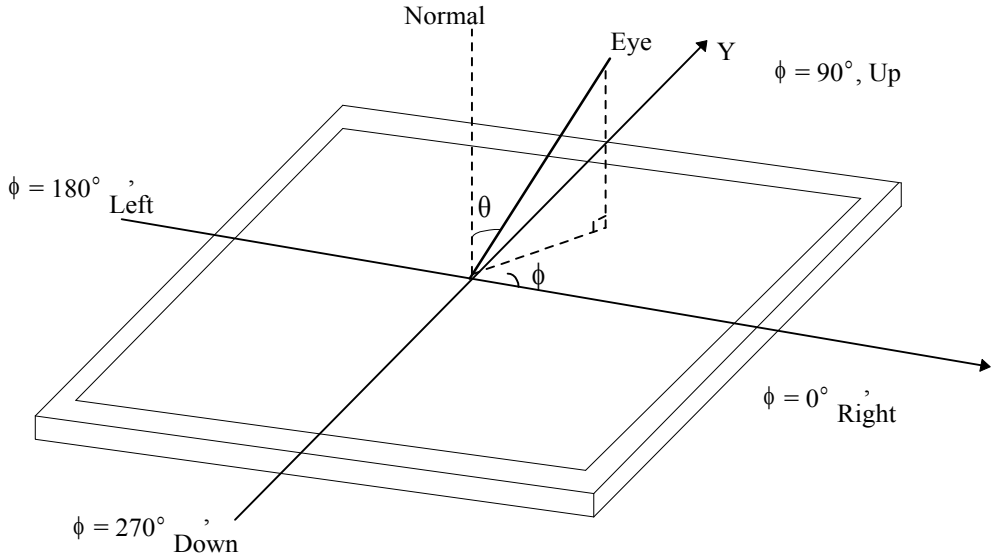

5. Mechanical Characteristics

The contents provide general mechanical characteristics for the model LP154W01(TLF2).
In addition the figures in the next page are detailed mechanical drawing of the LCD.

Outline Dimension	Horizontal	344.0 ± 0.5mm
	Vertical	222.0 ± 0.5mm
	Depth	6.2 ± 0.3mm
Bezel Area	Horizontal	335.0 ± 0.5mm
	Vertical	210.7 ± 0.5mm
Active Display Area	Horizontal	331.2 mm
	Vertical	207.0 mm
Weight	550g (Typ), 565(Max) w/o inverter	
Surface Treatment	Glare(2H)	

<FRONT VIEW>

Note) Unit:[mm], General tolerance: ± 0.5mm

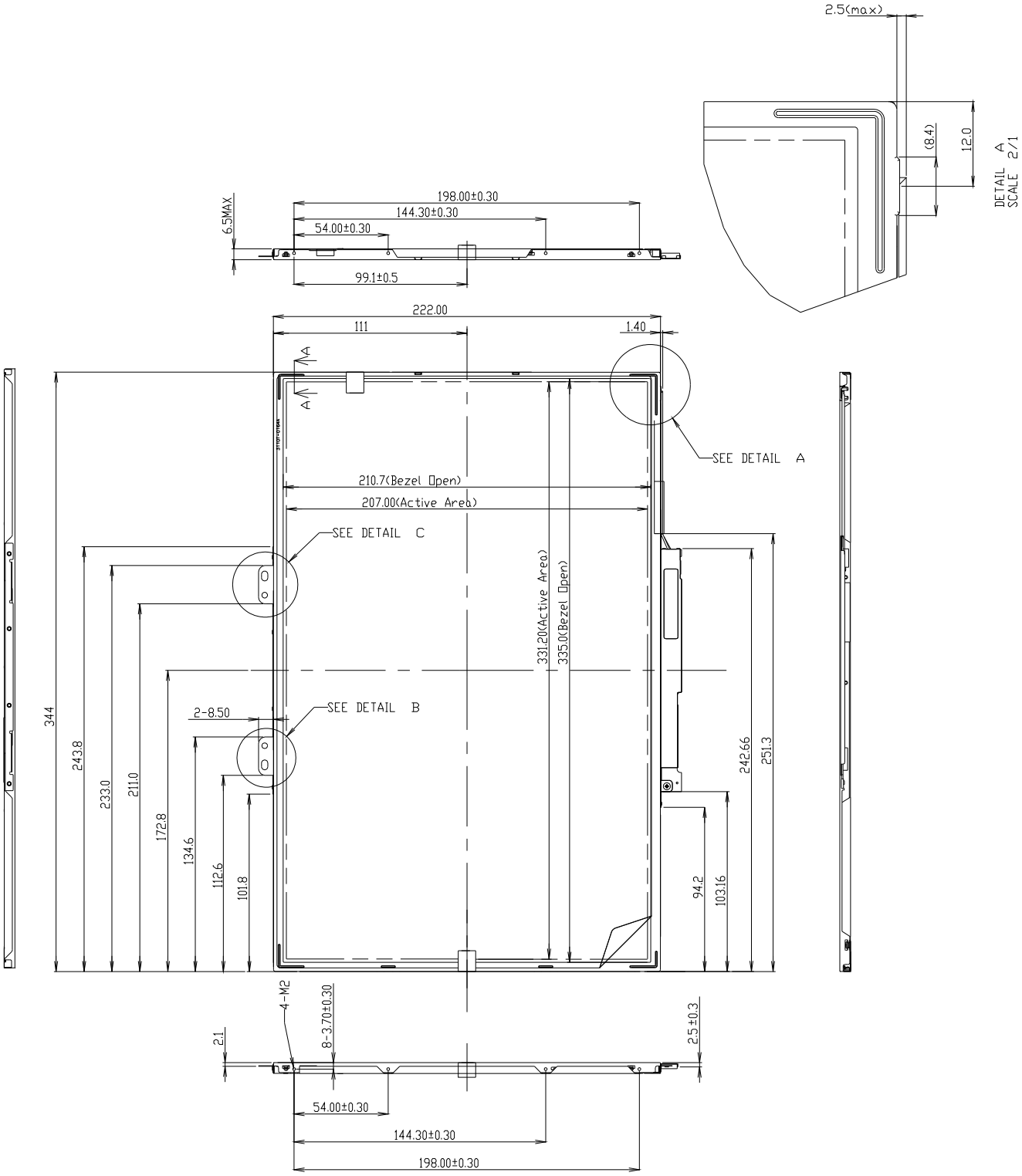

<REAR VIEW>

Note) Unit:[mm], General tolerance: ± 0.5mm

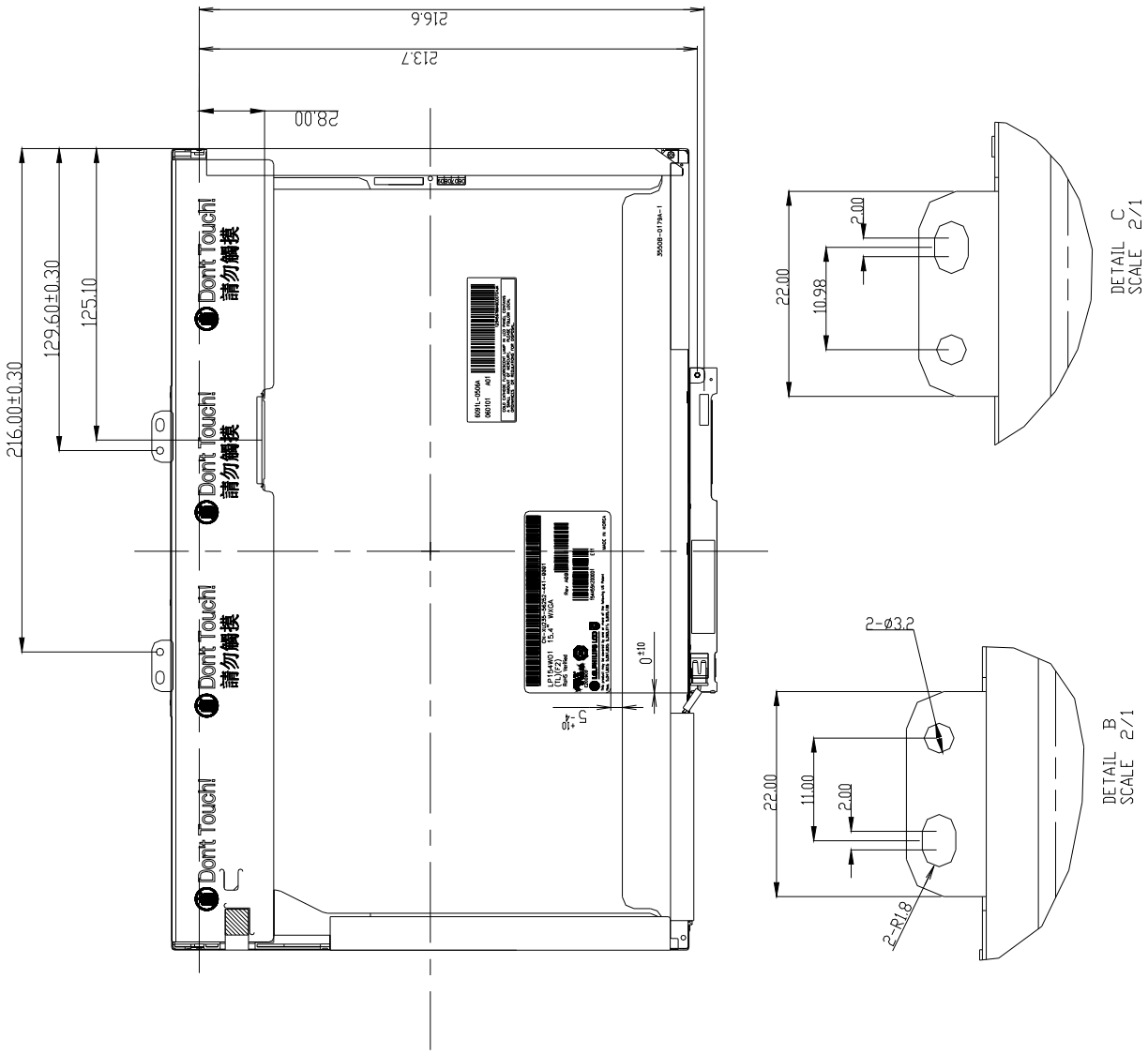

※PPID Label revision:

It is subject to change with Dell event. Please refer to the below table for detail.

Classification	SSI	PT	ST	QT
No Change	X00	X10	X20	A00
1st Revision	X01	X11	X21	A01
2nd Revision	X02	X12	X22	A02
3rd Revision	X03	X13	X23	A03

[DETAIL DESCRIPTION OF SIDE MOUNTING SCREW]

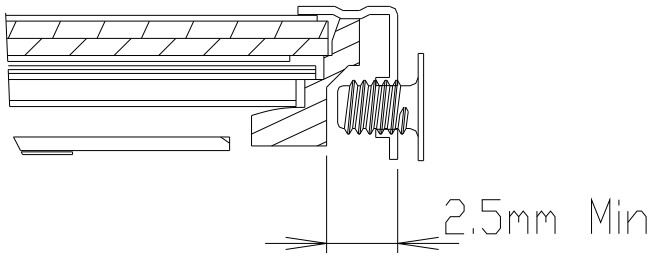

SECTION H1-H1

*SCREW(8EA) TORQUE : 2.5kgf.cm max
*Screw Hole Depth : 2.5mm min
*Screw Length : max 2.5, min2.0

Note) Unit:[mm], General tolerance: ± 0.5mm

6. Reliability

Environment test condition

No.	Test Item	Conditions
1	High temperature storage test	Ta= 60°C, 240h
2	Low temperature storage test	Ta= -20°C, 240h
3	High temperature operation test	Ta= 50°C, 50%RH, 240h
4	Low temperature operation test	Ta= 0°C, 240h
5	Vibration test (non-operating)	Sine wave, 5 ~ 150Hz, 1.5G, 0.37oct/min 3 axis, 30min/axis
6	Shock test (non-operating)	- No functional or cosmetic defects following a shock to all 6 sides delivering at least 180 G in a half sine pulse no longer than 2 ms to the display module - No functional defects following a shock delivering at least 200 g in a half sine pulse no longer than 2 ms to each of 6 sides. Each of the 6 sides will be shock tested with one each display, for a total of 6 displays
7	Altitude operating storage / shipment	0 ~ 10,000 feet (3,048m) 24Hr 0 ~ 40,000 feet (12,192m) 24Hr

{ Result Evaluation Criteria }
There should be no change which might affect the practical display function when the display quality test is conducted under normal operating condition.

7. International Standards

7-1. Safety

a) UL 60950-1:2003, First Edition, Underwriters Laboratories, Inc.,
Standard for Safety of Information Technology Equipment.
b) CAN/CSA C22.2, No. 60950-1-03 1st Ed. April 1, 2003, Canadian Standards Association,
Standard for Safety of Information Technology Equipment.
c) EN 60950-1:2001, First Edition,
European Committee for Electrotechnical Standardization(CENELEC)
European Standard for Safety of Information Technology Equipment.

7-2. EMC

a) ANSI C63.4 “Methods of Measurement of Radio-Noise Emissions from Low-Voltage Electrical and Electrical Equipment in the Range of 9kHZ to 40GHz. “American National Standards Institute(ANSI), 1992
b) C.I.S.P.R. “Limits and Methods of Measurement of Radio Interface Characteristics of Information Technology Equipment.“ International Special Committee on Radio Interference.
c) EN 55022 “Limits and Methods of Measurement of Radio Interface Characteristics of Information Technology Equipment.“ European Committee for Electrotechnical Standardization.(CENELEC), 1998
(Including A1: 2000)

8. Packing

8-1. Designation of Lot Mark

a) Lot Mark

A	B	C	D	E	F	G	H	I	J	K	L	M

A,B,C : SIZE(INCH)
E : MONTH
D : YEAR
F ~ M : SERIAL NO.

Note

1. YEAR

Year	2001	2002	2003	2004	2005	2006	2007	2008	2009	2010
Mark	1	2	3	4	5	6	7	8	9	0

2. MONTH

Month	Jan	Feb	Mar	Apr	May	Jun	Jul	Aug	Sep	Oct	Nov	Dec
Mark	1	2	3	4	5	6	7	8	9	A	B	C

b) Location of Lot Mark

Serial No. is printed on the label. The label is attached to the backside of the LCD module.
This is subject to change without prior notice.

9. PRECAUTIONS

Please pay attention to the followings when you use this TFT LCD module.

9-1. MOUNTING PRECAUTIONS

(1) You must mount a module using holes arranged in four corners or four sides.
(2) You should consider the mounting structure so that uneven force (ex. Twisted stress) is not applied to the module. And the case on which a module is mounted should have sufficient strength so that external force is not transmitted directly to the module.
(3) Please attach the surface transparent protective plate to the surface in order to protect the polarizer. Transparent protective plate should have sufficient strength in order to the resist external force.
(4) You should adopt radiation structure to satisfy the temperature specification.
(5) Acetic acid type and chlorine type materials for the cover case are not desirable because the former generates corrosive gas of attacking the polarizer at high temperature and the latter causes circuit break by electro-chemical reaction.
(6) Do not touch, push or rub the exposed polarizers with glass, tweezers or anything harder than HB pencil lead. And please do not rub with dust clothes with chemical treatment.
Do not touch the surface of polarizer for bare hand or greasy cloth.(Some cosmetics are detrimental to the polarizer.)
(7) When the surface becomes dusty, please wipe gently with absorbent cotton or other soft materials like chamois soaks with petroleum benzene. Normal-hexane is recommended for cleaning the adhesives used to attach front / rear polarizers. Do not use acetone, toluene and alcohol because they cause chemical damage to the polarizer.
(8) Wipe off saliva or water drops as soon as possible. Their long time contact with polarizer causes deformations and color fading.
(9) Do not open the case because inside circuits do not have sufficient strength.

9-2. OPERATING PRECAUTIONS

(1) The spike noise causes the mis-operation of circuits. It should be lower than following voltage :
V=± 200mV(Over and under shoot voltage)

(2) Response time depends on the temperature.(In lower temperature, it becomes longer.)
(3) Brightness depends on the temperature. (In lower temperature, it becomes lower.)
And in lower temperature, response time(required time that brightness is stable after turned on) becomes longer.
(4) Be careful for condensation at sudden temperature change. Condensation makes damage to polarizer or electrical contacted parts. And after fading condensation, smear or spot will occur.
(5) When fixed patterns are displayed for a long time, remnant image is likely to occur.
(6) Module has high frequency circuits. Sufficient suppression to the electromagnetic interference shall be done by system manufacturers. Grounding and shielding methods may be important to minimized the interference.

9-3. ELECTROSTATIC DISCHARGE CONTROL

Since a module is composed of electronic circuits, it is not strong to electrostatic discharge. Make certain that treatment persons are connected to ground through wrist band etc. And don't touch interface pin directly.

9-4. PRECAUTIONS FOR STRONG LIGHT EXPOSURE

Strong light exposure causes degradation of polarizer and color filter.

9-5. STORAGE

When storing modules as spares for a long time, the following precautions are necessary.

(1) Store them in a dark place. Do not expose the module to sunlight or fluorescent light. Keep the temperature between 5°C and 35°C at normal humidity.
(2) The polarizer surface should not come in contact with any other object.
It is recommended that they be stored in the container in which they were shipped.

9-6. HANDLING PRECAUTIONS FOR PROTECTION FILM

(1) When the protection film is peeled off, static electricity is generated between the film and polarizer. This should be peeled off slowly and carefully by people who are electrically grounded and with well ion-blown equipment or in such a condition, etc.
(2) The protection film is attached to the polarizer with a small amount of glue. If some stress is applied to rub the protection film against the polarizer during the time you peel off the film, the glue is apt to remain on the polarizer.
Please carefully peel off the protection film without rubbing it against the polarizer.
(3) When the module with protection film attached is stored for a long time, sometimes there remains a very small amount of glue still on the polarizer after the protection film is peeled off.
(4) You can remove the glue easily. When the glue remains on the polarizer surface or its vestige is recognized, please wipe them off with absorbent cotton waste or other soft material like chamois soaked with normal-hexane.

APPENDIX A. Enhanced Extended Display Identification Data (EEDID™) 1/3

LP154W01-TLF2 E-EDID DATA (ver0.0) 2006-09-19

Byte# (decimal)	Byte# (HEX)	Field Name and Comments	Value (HEX)		Value (binary)		
0	00	Header	0	0	0000	0000	Header
1	01	Header	F	F	1111	1111	
2	02	Header	F	F	1111	1111	
3	03	Header	F	F	1111	1111	
4	04	Header	F	F	1111	1111	
5	05	Header	F	F	1111	1111	
6	06	Header	F	F	1111	1111	
7	07	Header	0	0	0000	0000	
8	08	EISA manufacturer code(3 Character ID) = LPL	3	2	0011	0010	Vender/ Product ID
9	09	EISA manufacture code (Compressed ASCII)	0	C	0000	1100	
10	0A	Panel Supplier Reserved - Product code	0	0	0000	0000	
11	0B	Panel Supplier Reserved - Product code	C	C	1100	1100	
12	0C	LCD Module Serial No. = 0 (If not used)	0	0	0000	0000	
13	0D	LCD Module Serial No. = 0 (If not used)	0	0	0000	0000	
14	0E	LCD Module Serial No. = 0 (If not used)	0	0	0000	0000	
15	0F	LCD Module Serial No. = 0 (If not used)	0	0	0000	0000	
16	10	Week of Manufacture = 00	0	0	0000	0000	
17	11	Year of Manufacture = 2006	1	0	0001	0000	
18	12	EDID Structure version # = 1	0	1	0000	0001	EDID Version/ Revision
19	13	EDID Revision # = 3	0	3	0000	0011	
20	14	Video Input Definition = Digital I/P,non TMDS CRGB	8	0	1000	0000	Display Parameter
21	15	Max H image size(cm) = 33.12cm(33)	2	1	0010	0001	
22	16	Max V image size(cm) = 20.70cm(21)	1	5	0001	0101	
23	17	Display gamma =2.2	7	8	0111	1000	
24	18	Feature support(DPMS) = Active off, RGB Color	0	A	0000	1010	
25	19	Red/Green low Bits	0	F	0000	1111	Color Characteristic
26	1A	Blue/White Low Bits	1	0	0001	0000	
27	1B	Red X = 0.590	9	7	1001	0111	
28	1C	Red Y = 0.344	5	8	0101	1000	
29	1D	Green X = 0.324	5	2	0101	0010	
30	1E	Green Y = 0.535	8	8	1000	1000	
31	1F	Blue X = 0.157	2	8	0010	1000	
32	20	Blue Y = 0.138	2	3	0010	0011	
33	21	White X = 0.313	5	0	0101	0000	
34	22	White Y = 0.329	5	4	0101	0100	
35	23	Established timings 1 (00h if not used)	0	0	0000	0000	Established Timings
36	24	Established timings 2 (00h if not used)	0	0	0000	0000	
37	25	Manufacturer's timings (00h if not used)	0	0	0000	0000	
38	26	Standard Timing Identification 1 was not used	0	1	0000	0001	Standard Timing ID
39	27	Standard Timing Identification 1 was not used	0	1	0000	0001	
40	28	Standard Timing Identification 2 was not used	0	1	0000	0001	
41	29	Standard Timing Identification 2 was not used	0	1	0000	0001	
42	2A	Standard Timing Identification 3 was not used	0	1	0000	0001	
43	2B	Standard Timing Identification 3 was not used	0	1	0000	0001	
44	2C	Standard Timing Identification 4 was not used	0	1	0000	0001	
45	2D	Standard Timing Identification 4 was not used	0	1	0000	0001	
46	2E	Standard Timing Identification 5 was not used	0	1	0000	0001	
47	2F	Standard Timing Identification 5 was not used	0	1	0000	0001	
48	30	Standard Timing Identification 6 was not used	0	1	0000	0001	
49	31	Standard Timing Identification 6 was not used	0	1	0000	0001	
50	32	Standard Timing Identification 7 was not used	0	1	0000	0001	
51	33	Standard Timing Identification 7 was not used	0	1	0000	0001	
52	34	Standard Timing Identification 8 was not used	0	1	0000	0001	
53	35	Standard Timing Identification 8 was not used	0	1	0000	0001	

APPENDIX A. Enhanced Extended Display Identification Data (EEDID™) 2/3

Byte# (decimal)	Byte# (HEX)	Field Name and Comments	Value (HEX)		Value (binary)		
54	36	Pixel Clock/10,000 (LSB)	3	9	0011	1001	Detailed Timing Description #1
55	37	Pixel Clock/10,000 (MSB) / 1280 x 800 @60Hz pixel clock = 72	1	C	0001	1100	
56	38	Horizontal Active = 1280 pixels	0	0	0000	0000	
57	39	Horizontal Blanking = 160 pixels	A	0	1010	0000	
58	3A	Horizontal Active : Horizontal Blanking = 1280 : 160	5	0	0101	0000	
59	3B	Vertical Avtive = 800 lines	2	0	0010	0000	
60	3C	Vertical Blanking = 23 lines	1	7	0001	0111	
61	3D	Vertical Active : Vertical Blanking = 800 : 23	3	0	0011	0000	
62	3E	Horizontal Sync. Offset = 48 pixels	3	0	0011	0000	
63	3F	Horizontal Sync Pulse Width = 32 pixels	2	0	0010	0000	
64	40	Vertical Sync Offset = 2 lines : Sync Width = 6 lines	2	6	0010	0110	
65	41	Horizontal Vertical Sync Offset/Width upper 2bits = 0	0	0	0000	0000	
66	42	Horizontal Image Size = 331.2mm	4	B	0100	1011	
67	43	Vertical Image Size = 207.0mm	C	F	1100	1111	
68	44	Horizontal & Vertical Image Size	1	0	0001	0000	
69	45	Horizontal Border = 0	0	0	0000	0000	
70	46	Vertical Border = 0	0	0	0000	0000	
71	47	Non-interlaced,Normal display,no stereo,Digital separate sync,H/V pol ne	1	9	0001	1001	
72	48	Pixel Clock/10,000 (LSB)	3	9	0011	1001	Detailed Timing Description #2
73	49	Pixel Clock/10,000 (MSB) / 1280 x 800 @60Hz pixel clock = 72	1	C	0001	1100	
74	4A	Horizontal Active = 1280 pixels	0	0	0000	0000	
75	4B	Horizontal Blanking = 160 pixels	A	0	1010	0000	
76	4C	Horizontal Active : Horizontal Blanking = 1280 : 160	5	0	0101	0000	
77	4D	Vertical Avtive = 800 lines	2	0	0010	0000	
78	4E	Vertical Blanking = 23 lines	1	7	0001	0111	
79	4F	Vertical Active : Vertical Blanking = 800 : 23	3	0	0011	0000	
80	50	Horizontal Sync. Offset = 48 pixels	3	0	0011	0000	
81	51	Horizontal Sync Pulse Width = 32 pixels	2	0	0010	0000	
82	52	Vertical Sync Offset = 2 lines : Sync Width = 6 lines	2	6	0010	0110	
83	53	Horizontal Vertical Sync Offset/Width upper 2bits = 0	0	0	0000	0000	
84	54	Horizontal Image Size = 331.2mm	4	B	0100	1011	
85	55	Vertical Image Size = 207.0mm	C	F	1100	1111	
86	56	Horizontal & Vertical Image Size	1	0	0001	0000	
87	57	Horizontal Border = 0	0	0	0000	0000	
88	58	Vertical Border = 0	0	0	0000	0000	
89	59	Module "A" Revision = 00	0	0	0000	0000	
90	5A	Flag	0	0	0000	0000	Detailed Timing Description #3
91	5B	Flag	0	0	0000	0000	
92	5C	Flag	0	0	0000	0000	
93	5D	Dummy Descriptor	F	E	1111	1110	
94	5E	Flag	0	0	0000	0000	
95	5F	Dell P/N 1st Character = X	5	8	0101	1000	
96	60	Dell P/N 2nd Character = U	5	5	0101	0101	
97	61	Dell P/N 3nd Character = 2	3	2	0011	0010	
98	62	Dell P/N 4th Character = 3	3	3	0011	0011	
99	63	Dell P/N 5th Character = 5	3	5	0011	0101	
100	64	LCD Supplier EEDID Revision # = 0	0	0	0000	0000	
101	65	Manufacturer P/N = 1	3	1	0011	0001	
102	66	Manufacturer P/N = 5	3	5	0011	0101	
103	67	Manufacturer P/N = 4	3	4	0011	0100	
104	68	Manufacturer P/N = W	5	7	0101	0111	
105	69	Manufacturer P/N = 0	3	0	0011	0000	
106	6A	Manufacturer P/N = 1	3	1	0011	0001	
107	6B	P/N(If <13 char, then terminate with ASCII code 0Ah, set remai	0	A	0000	1010	

APPENDIX A. Enhanced Extended Display Identification Data (EEDID™) 3/3

Byte# (decimal)	Byte# (HEX)	Field Name and Comments	Value (HEX)		Value (binary)		
108	6C	Flag	0	0	0000	0000	Detailed Timing Description #4
109	6D	Flag	0	0	0000	0000	
110	6E	Flag	0	0	0000	0000	
111	6F	Data Type Tag : ASCII String	F	E	1111	1110	
112	70	Flag	0	0	0000	0000	
113	71	SMBUS Value = 10 nits	1	F	0001	1111	
114	72	SMBUS Value = 17 nits	2	D	0010	1101	
115	73	SMBUS Value = 24 nits	3	A	0011	1010	
116	74	SMBUS Value = 30 nits	4	5	0100	0101	
117	75	SMBUS Value = 60 nits	6	5	0110	0101	
118	76	SMBUS Value = 110 nits	8	C	1000	1100	
119	77	SMBUS Value = 150 nits	A	B	1010	1011	
120	78	SMBUS Value = Max (Typically = FFh)	F	F	1111	1111	
121	79	Number of LVDS receiver chips = 1 or 2	0	1	0000	0001	
122	7A	BIST Enable: Yes = '01' No = '00'	0	1	0000	0001	
123	7B	3 char, then terminate with ASCII code 0Ah, set remaining char	0	A	0000	1010	
124	7C	(If<13 char, then terminate with ASCII code 0Ah)	2	0	0010	0000	
125	7D	(If<13 char, then terminate with ASCII code 0Ah)	2	0	0010	0000	
126	7E	Extension flag = 00	0	0	0000	0000	Extension Flag
127	7F	Checksum	C	7	1100	0111	Checksum