SPECIFICATION
FOR
APPROVAL

( ) Preliminary Specification
(◆) Final Specification

Title	15.4” WSXGA+ TFT LCD

BUYER	DELL
MODEL	

SUPPLIER	LG.Philips LCD CO., Ltd.
*MODEL	LP154WE2
SUFFIX	TLB2

*When you obtain standard approval,
please use the above model name without suffix

SIGNATURE	DATE
/	
/	
/	

Please return 1 copy for your confirmation with your signature and comments.

APPROVED BY	SIGNATURE
S. C. Yoon / S.Manager	
REVIEWED BY	
Y.S. Ha / Manager	
PREPARED BY	
S. H. Jang / Engineer	

Product Engineering Dept.
LG. Philips LCD Co., Ltd

RECORDS OF REVISIONS

Revision No	Revision Date	Page	Description	EDID ver
0.1	Feb, 22. 2007	-	The first draft	0.0
0.2	Mar, 14. 2007	-	The 2'nd draft	0.0
		P.4	General Feature Updated (Anti-glare → Glare)	-
		p.20	Label Updated at rear view drawing.	-
			-. Dell P/N Updated.	
			-. China Rohs Mark inserted.	
1.1	Oct.3.2007	-	The Final	0.3
		p.6	Module power updated(1.73W→1.52W)	
		p.8	T-Con updated (DTML012→SW0610_M)	
		p.20	Cover-shield drawing updated.	
		p.24	Box size updated (395mm ×390mm × 309mm)	
		p.29	EDID updated.	
			-. DCLK(120.50Mhz→121.70Mhz)	
			-. SM Bus brightness step updated.	

1. General Description

The LP154WE2 is a Color Active Matrix Liquid Crystal Display with an integral Cold Cathode Fluorescent Lamp(CCFL) backlight system. The matrix employs a-Si Thin Film Transistor as the active element.
It is a transmissive type display operating in the normally white mode. This TFT-LCD has 15.4 inches diagonally measured active display area with WSXGA+ resolution(1680 vertical by 1050 horizontal pixel array) Each pixel is divided into Red, Green and Blue sub-pixels or dots which are arranged in vertical stripes. Gray scale or the brightness of the sub-pixel color is determined with a 6-bit gray scale signal for each dot, thus, presenting a palette of more than 262,144 colors.
The LP154WE2 has been designed to apply the interface method that enables low power, high speed, low EMI. Flat Link must be used as a LVDS(Low Voltage Differential Signaling) chip.
The LP154WE2 is intended to support applications where thin thickness, low power are critical factors and graphic display are important. In combination with the vertical arrangement of the sub-pixels, the LP154WE2 characteristics provide an excellent flat display for office automation products such as Notebook PC.

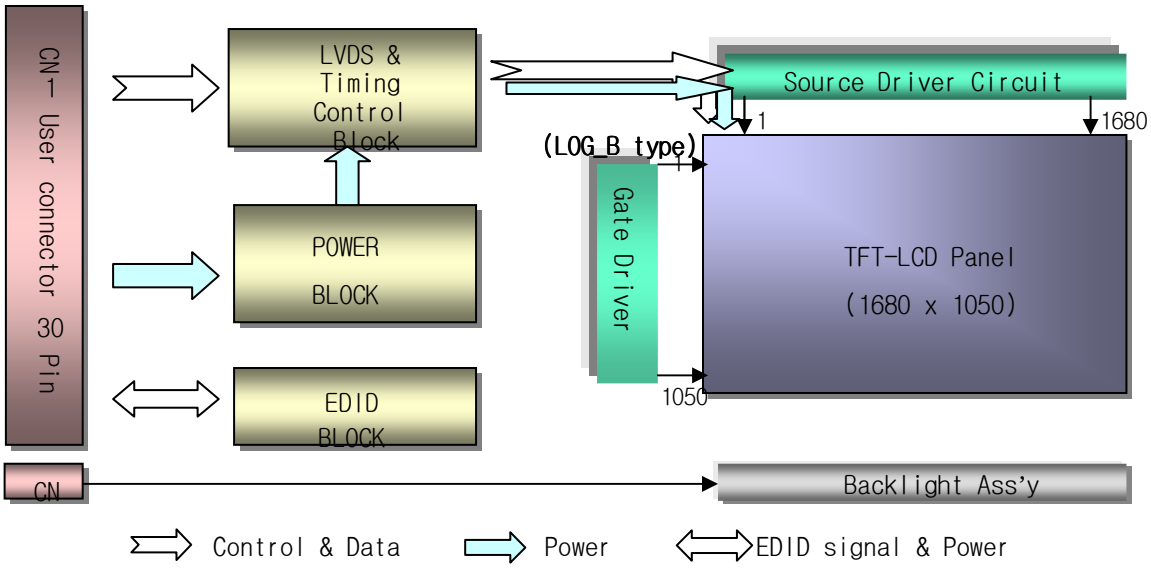

General Features

Active screen size	15.4 inches diagonal
Outline Dimension	344.0(H)[typ.] x 222.0(V)[typ.] x 6.5(D) mm[Max.]
Pixel Pitch	0.19725 mm x 0.19725mm
Pixel format	1680 horiz. By 1050 vert. Pixels RGB stripes arrangement
Color depth	6-bit, 262,144 colors
Luminance, white	200 cd/m^2(typ.), 5p average
Power Consumption	Total: 5.94W(Typ.)@ LCM circuit 1.52.W(Typ.) ,B/L input 4.42 W (Typ.)
Weight	590g (Max.) without inverter& Bracket
Display operating mode	Transmissive mode, normally white
Surface treatments	Glare treatment of the front polarizer, HAZE 0%

2. Absolute Maximum Ratings

The following are maximum values which, if exceeded, may cause operation or damage to the unit.

Table 1. ABSOLUTE MAXIMUM RATINGS

Parameter	symbol	Values		Units	Notes
		Min.	Max.		
Power Input Voltage	V_{CC}	-0.3	4.0	Vdc	At 25 ± 5°C
Operating Temperature	T_{OP}	0	50	°C	1
Storage Temperature	T_{ST}	-20	60	°C	1
Operating Ambient Humidity	H_{OP}	10	90	%RH	1
Storage Humidity	H_{ST}	10	90	%RH	1

Note : 1. Temperature and relative humidity range are shown in the figure below.
Wet bulb temperature should be 39 °C Max, and no condensation of water.

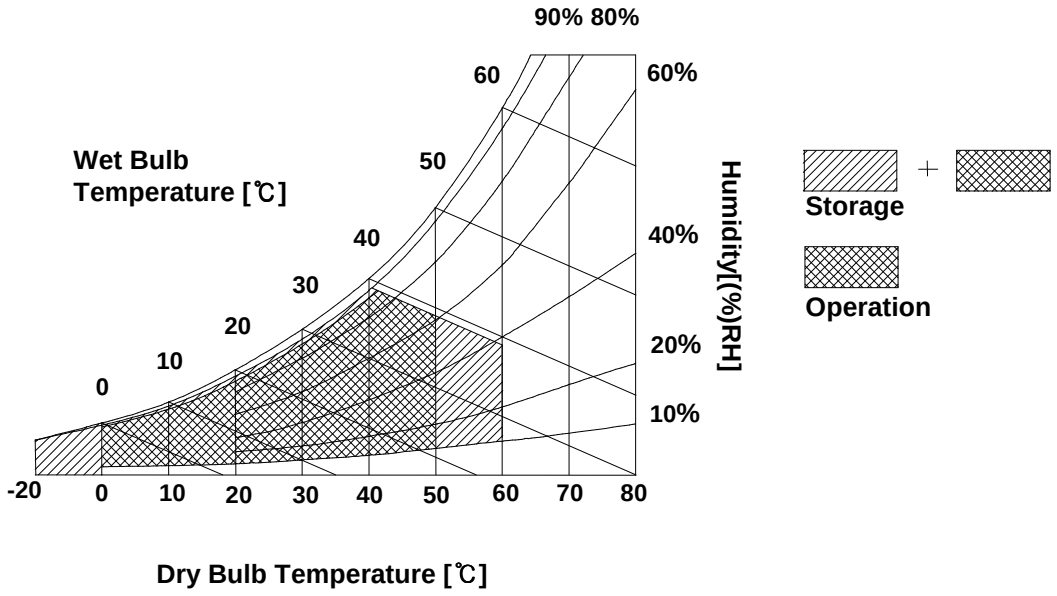

3. Electrical Specifications

3-1. Electrical Characteristics

The LP154WE2 requires two power inputs. One is employed to power the LCD electronics and to drive the TFT array and liquid crystal. The second input which powers the CCFL, is typically generated by an inverter. The inverter is an external unit to the LCD.

Table 2. ELECTRICAL CHARACTERISTICS

Parameter	Symbol	Values			Units	Notes
		Min.	Typ.	Max.		
MODULE						
Power Supply Input Voltage	V_{CC}	3.0	3.3	3.6	Vdc	
Power Supply Input Current	I_{CC}	-	460	530	mA	1
Differential Impedance	Zm	90	100	110	ohm	2
Power Consumption	P_C		1.52	1.75	Watts	1
LAMP						
Operating Voltage	V_{BL}	665	680	895	V_{RMS}	3
Operating Current	I_{BL}	2.0	6.5	7.0	mA	
Established Starting Voltage	V_S					4
at 25 °C		-	-	1170	V_{RMS}	
at 0 °C		-	-	1400	V_{RMS}	
Operating Frequency	f_{BL}	45	60	80	kHz	5
Discharge Stabilization Time	T_S			3	Minutes	6
Power Consumption	P_{BL}	-	4.42	4.65	Watts	7
Life Time		15,000	-	-	Hrs	8

Note : **The design of the inverter must have specification for the lamp in LCD Assembly.**
The performance of the Lamp in LCM, for example life time or brightness, is extremely influenced by the characteristics of the DC-AC inverter. So all the parameters of an inverter should be carefully designed so as not to produce too much leakage current from high-voltage output of the inverter.
When you design or order the inverter, please make sure unwanted lighting caused by the mismatch of the lamp and the inverter(no lighting, flicker, etc) never occurs. When you confirm it, the LCD Assembly should be operated in the same condition as installed in you instrument.

1. The specified current and power consumption are under the V_{CC}=3.3V, 25°C,fv=60Hz condition whereas Mosaic pattern is displayed and fv is the frame frequency.
2. This impedance value is needed to proper display and measured from LVDS T_X to the mating connector.
3. The variance of the voltage is ± 10%.
4. The voltage above V_S should be applied to the lamps for more than 1 second for start-up. Otherwise, the lamps may not be turned on.

5. The output of the inverter must have symmetrical(negative and positive) voltage waveform and symmetrical current waveform.(Asymmetrical ratio is less than 10%) Please do not use the inverter which has asymmetrical voltage and asymmetrical current and spike wave.
   Lamp frequency may produce interface with horizontal synchronous frequency and as a result this may cause beat on the display. Therefore lamp frequency shall be as away possible from the horizontal synchronous frequency and from its harmonics in order to prevent interference.
6. It is defined the brightness of the lamp after being lighted for 5 minutes as 100%.
   T_S is the time required for the brightness of the center of the lamp to be not less than 95%.
7. The lamp power consumption shown above does not include loss of external inverter.
   The used lamp current is the lamp typical current.
8. The life is determined as the time at which brightness of the lamp is 50% compared to that of initial value at the typical lamp current on condition of continuous operating at 25 ± 2°C.
9. Do not attach a conducting tape to lamp connecting wire.
   If the lamp wire attach to a conducting tape, TFT-LCD Module has a low luminance and the inverter has abnormal action. Because leakage current is occurred between lamp wire and conducting tape.
10. Requirements for a system inverter design, which is intended to have a better display performance, a better power efficiency and a more reliable lamp, are following.
    It shall help increase the lamp lifetime and reduce leakage current.
    a. The asymmetry rate of the inverter waveform should be less than 10%.
    b. The distortion rate of the waveform should be within √2 ±10%.
    * Inverter output waveform had better be more similar to ideal sine wave.

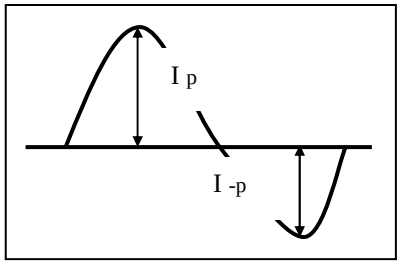

* Asymmetry rate:

$| I_p - I_{-p} | / I_{rms} * 100\%$

* Distortion rate

I_p (or I_{-p}) / I_{rms}

3-2. Interface Connections

Interface chip must be used FlatLink, part No. THC63LVDF823A(Transmitter made by Thine Inc or equivalence.
This LCD employs two interface connections, a 30-pin-connector is used for the module electronics and the other connector is used for the integral backlight system.
The electronics interface connector is a model FI-XB30SRL-HF11 manufactured by JAE or equivalent.
The pin configuration for the connector is shown in the table below.

Table 3. MODULE CONNECTOR PIN CONFIGURATION(LVDS)

Pin	Symbol	Description	Notes
1	GND	Ground	1. Interface chips 1.1 LCD : SW0610_M(LCD Controller) including LVDS Receiver 1.2 System : THC63LVD823 or equivalent *Pin to Pin compatible with TI LVDS 2. Connector 2.1 LCD : FI-XB30SRL-HF11,JAE or equivalent 2.2 Mating : FI-X30M or equivalent. 2.3 Connector pin arrangement 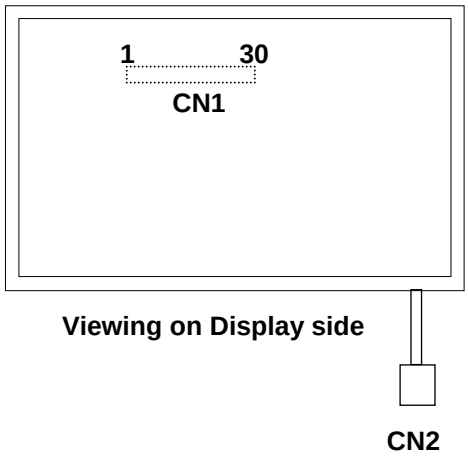
2	Vcc	Power(3.3V)	
3	Vcc	Power(3.3V)	
4	VEDID	DDC 3.3V Power	
5	NC	No connect	
6	CLKEDID	DDC clock	
7	DATAEDID	DDC data	
8	Odd_A1M	Differential Signal	
9	Odd_A1P	Differential Signal	
10	GND	Ground	
11	Odd_A2M	Differential Signal	
12	Odd_A2P	Differential Signal	
13	GND	Ground	
14	Odd_A3M	Differential Signal	
15	Odd_A3P	Differential Signal	
16	GND	Ground	
17	Odd_CLKM	Differential Signal	
18	Odd_CLKP	Differential Signal	
19	GND	Ground	
20	Even_A1M	Differential Signal	
21	Even_A1P	Differential Signal	
22	GND	Ground	
23	Even_A2M	Differential Signal	
24	Even_A2P	Differential Signal	
25	GND	Ground	
26	Even_A3M	Differential Signal	
27	Even_A3P	Differential Signal	
28	GND	Ground	
29	Even_CLKM	Differential Signal	
30	Even_CLKP	Differential Signal	

The backlight interface connector is a model BHSR-02VS-1, manufactured by JST or Compatible .
The mating connector part number is SM02B-BHSS-1 or equivalent.
The pin configuration for the connector is shown in the table below.

Table 4. BACKLIGHT CONNECTOR PIN CONFIGURATION

Pin	Symbol	Description	Notes
1	HV	Power supply for lamp (High voltage side)	1
2	LV	Power supply for lamp (Low voltage side)	1

Notes : 1. The high voltage side terminal is colored Pink, The low voltage side terminal is Green.

3-3. Signal Timing Specifications

This is the signal timing required at the input of the LVDS Transmitter. All of the interface signal timing should be satisfied with the following specifications for its proper operation.

Table 6. Timing Table

ITEM		SYMBOL	MIN	TYP.	MAX.	UNIT	NOTES
Dclk	Frequency	f_{CLK}	55	61	69	MHz	
	Width-Low	t_{WCL}	3	-	-	ns	
	Width-High	t_{WCH}	3	-	-	ns	
	Duty	D	0.4	0.5	0.6		D= t_{CLKH} /t_{CLK}
Hsync	Period	t_{HP}	864	952	1288		
	Width	t_{WH}	8	32		t_{HP}	
Vsync	Period	t_{VP}	1057	1066	1082	t_{HP}	
	Width active	t_{WV}	1	3		t_{HP}	
DE	Set up Time	t_{SI}	3	-	-	ns	For Dclk
	Hold Time	t_{HI}	3	-	-		
	Horizontal Back Porch	t_{HBP}	8	64		t_{CLK}	
	Horizontal Front Porch	t_{HFP}	8	16			
	Vertical Back Porch	t_{VBP}	5	12		t_{HP}	
	Vertical Front Porch	t_{VFP}	1	1			
DATA	Set up Time	t_{SD}	-	-	-	ns	For Dclk
	Hold Time	t_{HD}	-	-	-		
Input Voltage	High	t_{rH}	0.7Vcc				
	Low	t_{rL}			0.3Vcc		

3-4. Signal Timing Waveforms

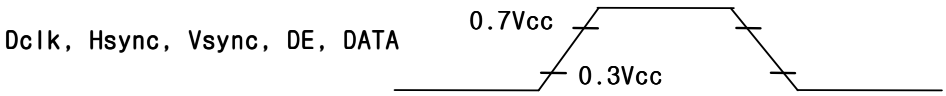

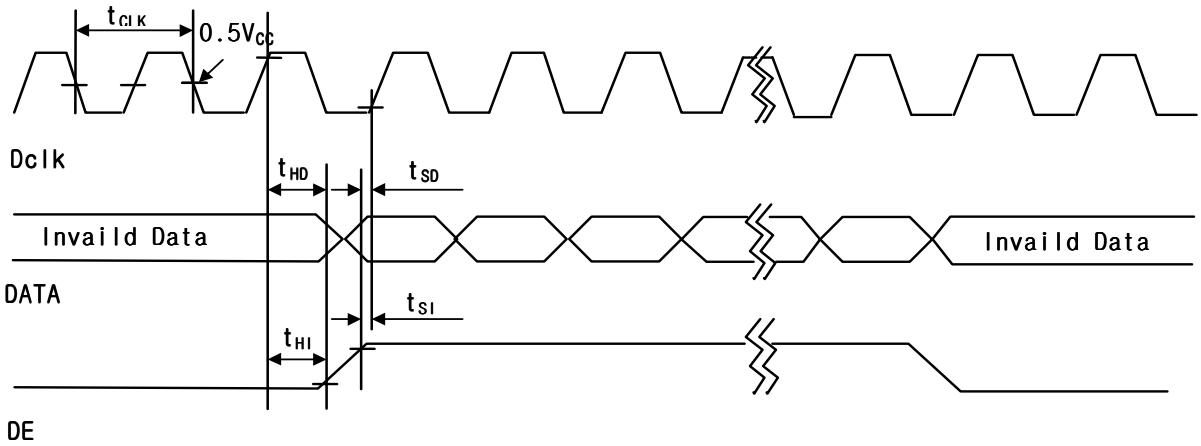

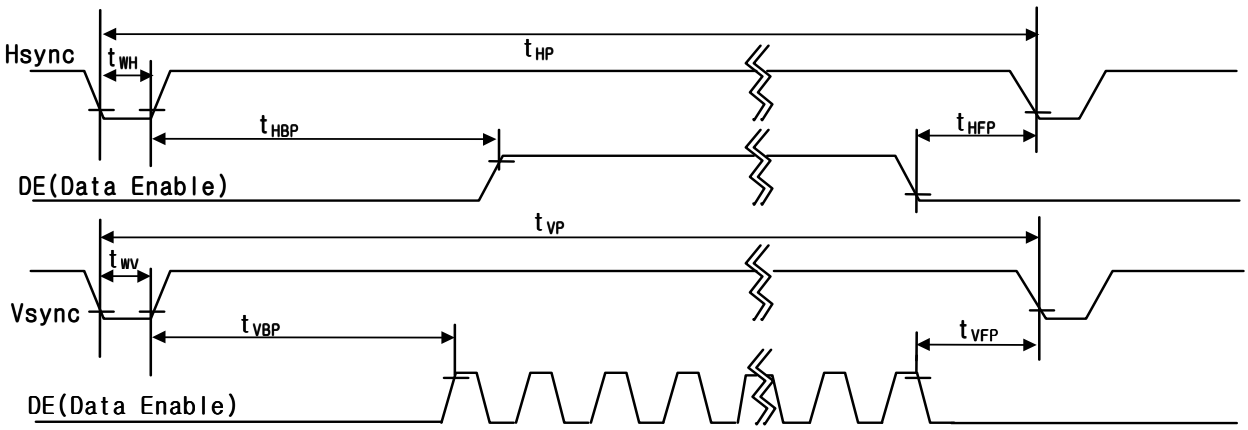

3-5. Color Input Data Reference

The brightness of each primary color(red,green and blue) is based on the 6-bit gray scale data input for the color ; the higher the binary input, the brighter the color. The table below provides a reference for color versus data input.

Table 7. COLOR DATA REFERENCE

Color		Input Color Data																	
		Red						Green						Blue					
		MSB					LSB	MSB					LSB	MSB					LSB
		R5	R4	R3	R2	R1	R0	G5	G4	G3	G2	G1	G0	B5	B4	B3	B2	B1	B0
Basic Colors	Black	0	0	0	0	0	0	0	0	0	0	0	0	0	0	0	0	0	0
	Red(63)	1	1	1	1	1	1	0	0	0	0	0	0	0	0	0	0	0	0
	Green(63)	0	0	0	0	0	0	1	1	1	1	1	1	0	0	0	0	0	0
	Blue(63)	0	0	0	0	0	0	0	0	0	0	0	0	1	1	1	1	1	1
	Cyan	0	0	0	0	0	0	1	1	1	1	1	1	1	1	1	1	1	1
	Magenta	1	1	1	1	1	1	0	0	0	0	0	0	1	1	1	1	1	1
	Yellow	1	1	1	1	1	1	1	1	1	1	1	1	0	0	0	0	0	0
	White	1	1	1	1	1	1	1	1	1	1	1	1	1	1	1	1	1	1
Red	Red(00) Dark	0	0	0	0	0	0	0	0	0	0	0	0	0	0	0	0	0	0
	Red(01)	0	0	0	0	0	1	0	0	0	0	0	0	0	0	0	0	0	0
	Red(02)	0	0	0	0	1	0	0	0	0	0	0	0	0	0	0	0	0	0
	:	:	:	:	:	:	:	:	:	:	:	:	:	:	:	:	:	:	:
	Red(61)	1	1	1	1	0	1	0	0	0	0	0	0	0	0	0	0	0	0
	Red(62)	1	1	1	1	1	0	0	0	0	0	0	0	0	0	0	0	0	0
	Red(63) Bright	1	1	1	1	1	1	0	0	0	0	0	0	0	0	0	0	0	0
Green	Green(00)Dark	0	0	0	0	0	0	0	0	0	0	0	0	0	0	0	0	0	0
	Green(01)	0	0	0	0	0	0	0	0	0	0	0	1	0	0	0	0	0	0
	Green(02)	0	0	0	0	0	0	0	0	0	0	1	0	0	0	0	0	0	0
	:	:	:	:	:	:	:	:	:	:	:	:	:	:	:	:	:	:	:
	Green(61)	0	0	0	0	0	0	1	1	1	1	0	1	0	0	0	0	0	0
	Green(62)	0	0	0	0	0	0	1	1	1	1	1	0	0	0	0	0	0	0
	Green(63)Bright	0	0	0	0	0	0	1	1	1	1	1	1	0	0	0	0	0	0
Blue	Blue(00) Dark	0	0	0	0	0	0	0	0	0	0	0	0	0	0	0	0	0	0
	Blue(01)	0	0	0	0	0	0	0	0	0	0	0	0	0	0	0	0	0	1
	Blue(02)	0	0	0	0	0	0	0	0	0	0	0	0	0	0	0	0	1	0
	:	:	:	:	:	:	:	:	:	:	:	:	:	:	:	:	:	:	:
	Blue(61)	0	0	0	0	0	0	0	0	0	0	0	0	1	1	1	1	0	1
	Blue(62)	0	0	0	0	0	0	0	0	0	0	0	0	1	1	1	1	1	0
	Blue(63) Bright	0	0	0	0	0	0	0	0	0	0	0	0	1	1	1	1	1	1

3-6. Power Sequence

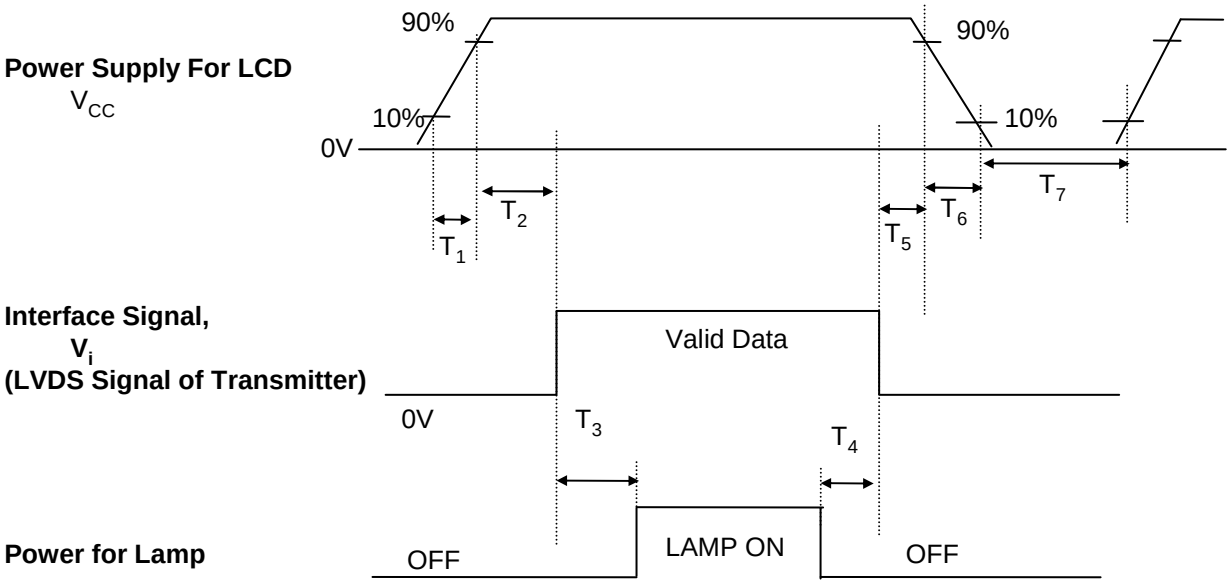

Parameter	Values			Units
	Min.	Typ.	Max.	
T_1	-	-	10	ms
T_2	0	-	50	ms
T_3	200	-	-	ms
T_4	200	-	-	ms
T_5	0	-	50	ms
T_6	-	-	10	ms
T_7	400	-	-	ms

Notes : 1. Please avoid floating state of interface signal at invalid period.
2. When the interface signal is invalid, be sure to pull down the power supply for LCD V_{CC} to 0V.
3. Lamp power must be turn on after power supply for LCD and interface signal are valid.

4. Optical Specification

Optical characteristics are determined after the unit has been 'ON' and stable for approximately 30 minutes in a dark environment at 25 °C. The values specified are at an approximate distance 50cm from the LCD surface at a viewing angle of Φ and θ equal to 0 °.

FIG. 1 presents additional information concerning the measurement equipment and method.

FIG. 1 Optical Characteristic Measurement Equipment and Method

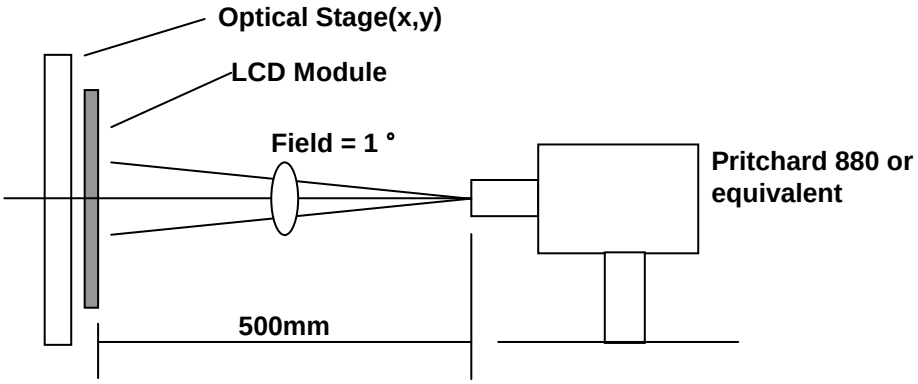

Table 8. OPTICAL CHARACTERISTICS (Ta=25 °C, V_{CC}=3.3V, f_V=60Hz Dclk=61MHz, I_{BL}=6.5mA)

Parameter	Symbol	Values			Units	Notes
		Min.	Typ.	Max.		
Contrast Ratio	CR	-	500	-		1
Surface Luminance, white	L_{WH}	180	200		cd/m^2	2
Luminance % uniformity	δ_{WHITE}	-	-	1.6		3
Response Time	Tr					4
Rise Time + Decay Time	$Tr_{R+}Tr_D$	-	16	30	ms	
CIE Color Coordinates						
Red	XR	0.560	0.590	0.620		±0.03
	YR	0.315	0.345	0.375		
Green	XG	0.296	0.326	0.356		
	YG	0.514	0.544	0.574		
Blue	XB	0.127	0.157	0.187		
	YB	0.111	0.141	0.171		
White	XW	0.283	0.313	0.343		
	YW	0.299	0.329	0.359		
Viewing Angle						
x axis, right(ϕ=0°)	θr	60	65			5
x axis, left (ϕ=180°)	θl	60	65			
y axis, up (ϕ=90°)	θu	50	55		degree	
y axis, down (ϕ=270°)	θd	50	55			
Gray Scale	-	-	2.2	-		6

Notes : 1. Contrast Ratio(CR) is defined mathematically as :

$$\text{Contrast Ratio} = \frac{\text{Surface Luminance with all white pixels}}{\text{Surface Luminance with all black pixels}}$$

2. Surface luminance is the 5point (1~5)average across the LCD surface 50cm from the surface with all pixels displaying white. For more information see FIG 2.
When I_{BL}= 6.5mA, $L_{WH=}$200cd/m^2(typ.)

3. Luminance % uniformity is measured for 13 point For more information see FIG 2.
δ WHITE = Maximum(LN1,LN2, ….. LN13) ÷ Minimum(LN1,LN2, ….. LN13)

4. Response time is the time required for the display to transition from white to black(Rise Time, Tr_R) and from black to white(Decay Time, Tr_D). For additional information see FIG 3.

5. Viewing angle is the angle at which the contrast ratio is greater than 10. The angles are determined for the horizontal or x axis and the vertical or y axis with respect to the z axis which is normal to the LCD surface. For more information see FIG 4.

6. Gray scale specification * fv=60Hz

Gray Level	Luminance(%) (Typ.)
L0	0.12
L7	0.98
L15	3.78
L23	9.95
L31	19.6
L39	32.8
L47	50.1
L55	71.8
L63	100

FIG. 2 Luminance

<measuring point for luminance variation/surface luminance>

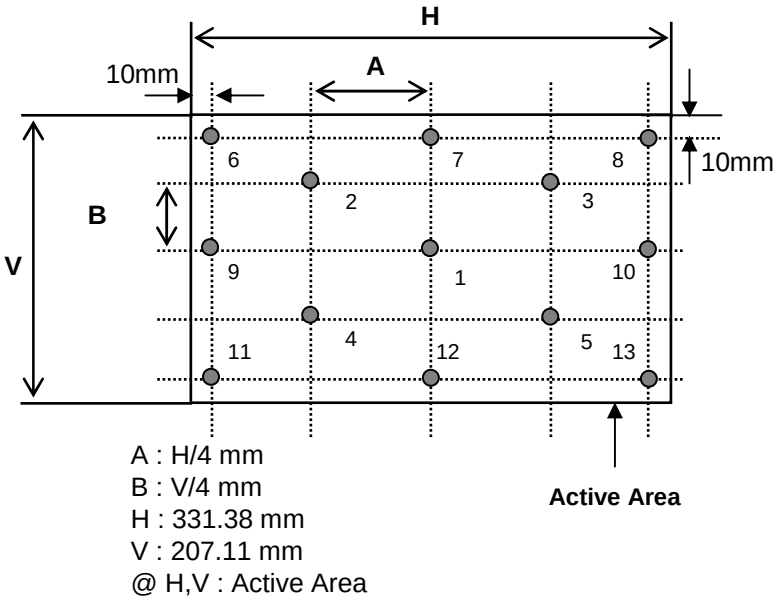

FIG. 3 Response Time

The response time is defined as the following figure and shall be measured by switching the input signal for “black” and “white”.

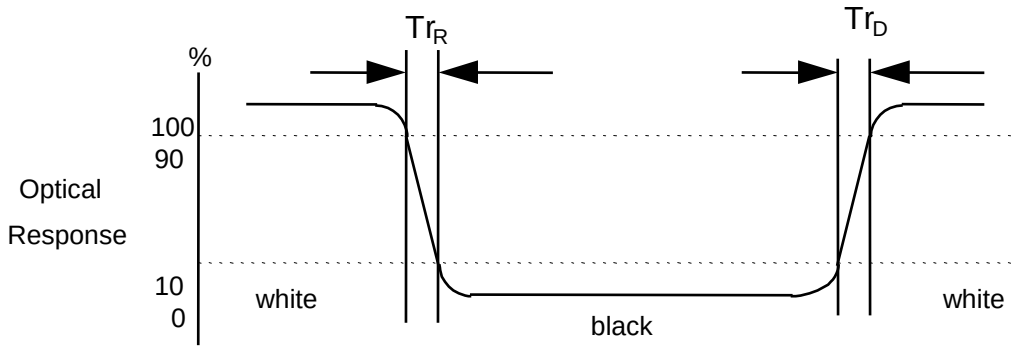

FIG. 4 Viewing angle

<dimension of viewing angle range>

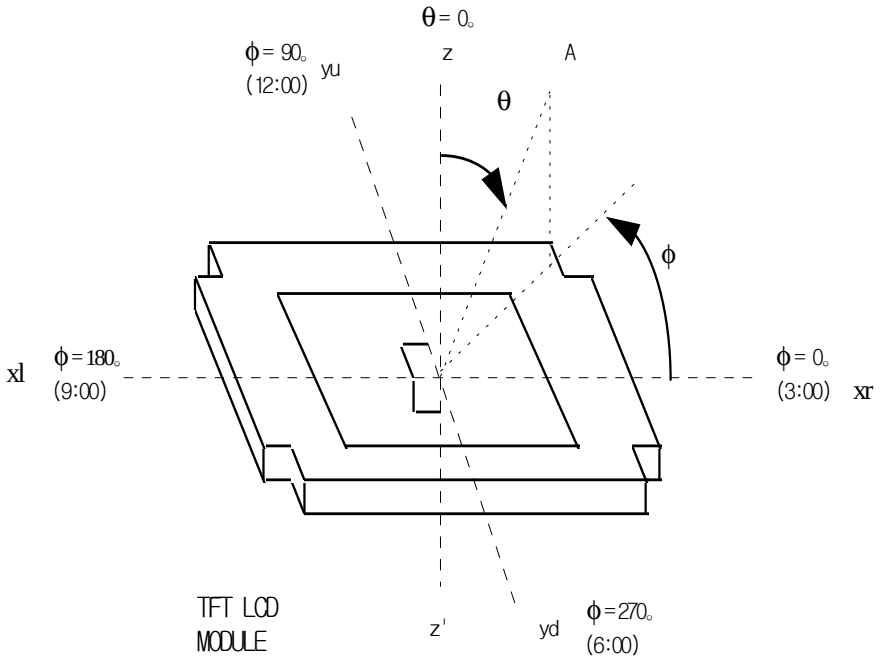

A : Eye of Observer

5. Mechanical Characteristics

The contents provide general mechanical characteristics for the model LP154WE2. In addition the figures in the next page are detailed mechanical drawing of the LCD.

Outside dimensions	Horizontal	344.0 ± 0.5mm
	Vertical	222.0 ± 0.5mm
	Depth	6.2㎜(Typ), 6.5㎜(Max)
Bezel area	Horizontal	335.0± 0.5mm
	Vertical	210.7 ± 0.5mm
Active display area	Horizontal	331.38mm
	Vertical	207.11mm
Weight(approximate)	590g(Max) without inverter & bracket	
Surface Treatment	Antiglare treatment of the front polarizer,HAZE(44%)	

<FRONT VIEW>

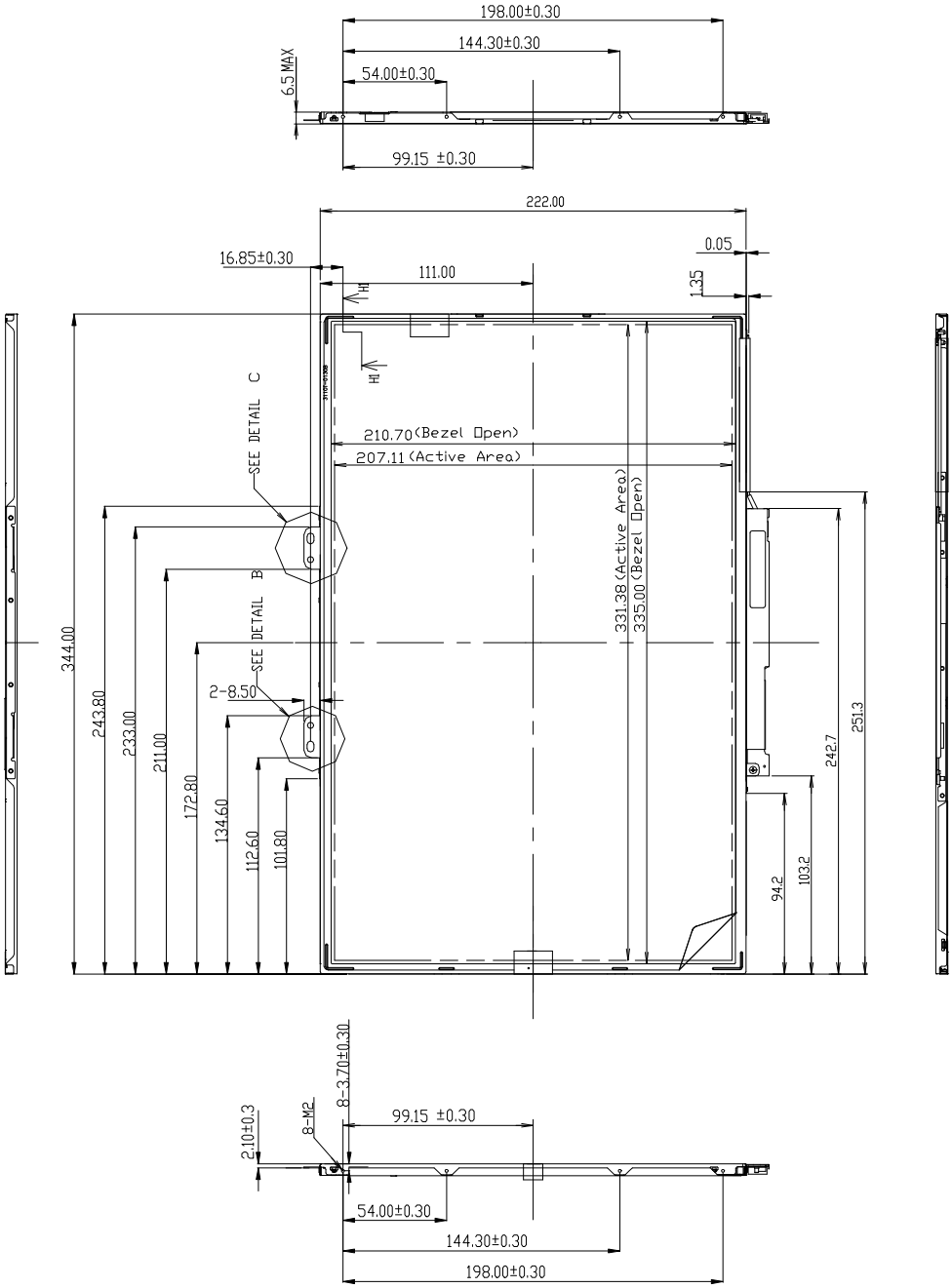

Note. unspecified dimensional tolerance are +/-0.5mm

<REAR VIEW>

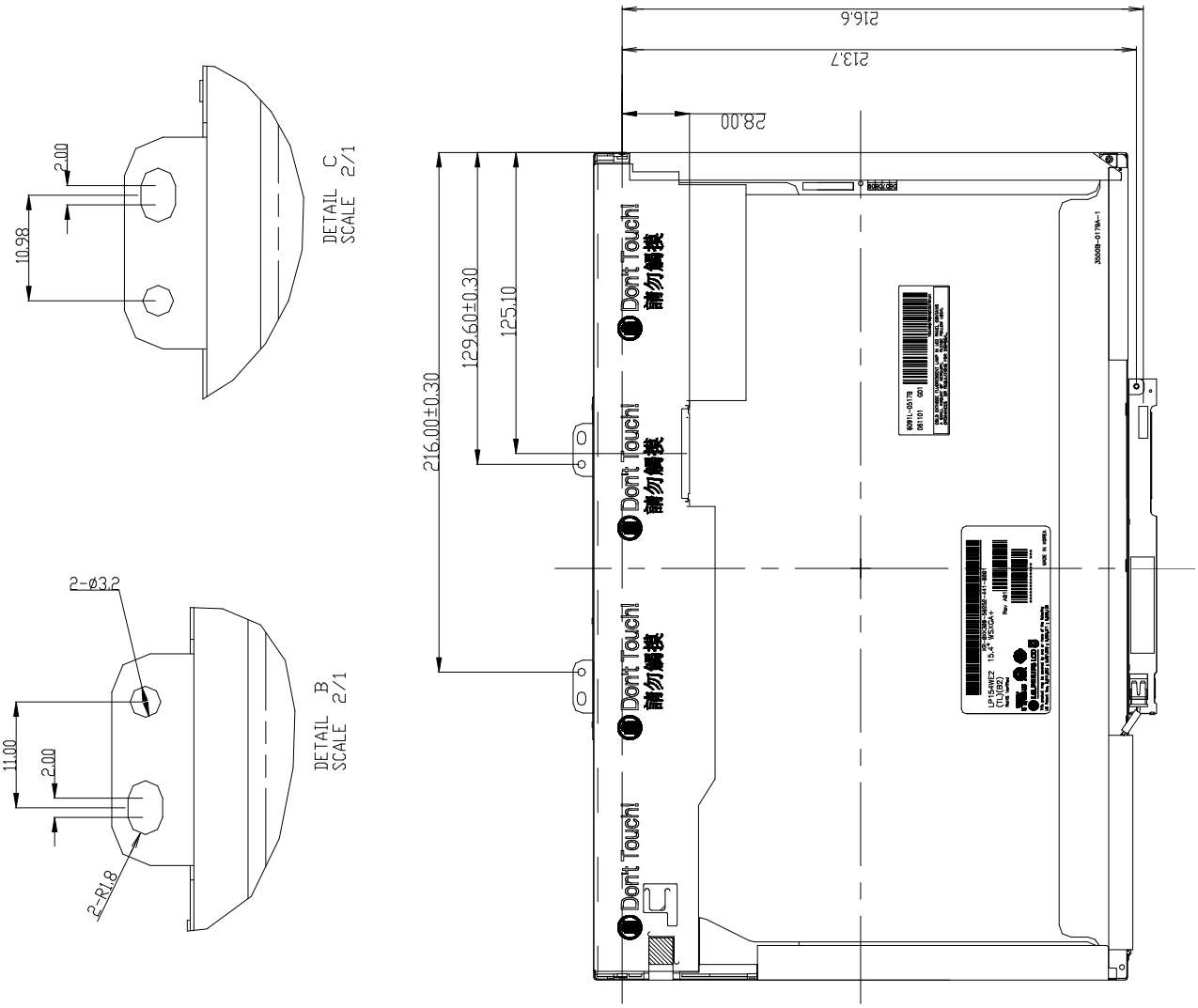

Note. unspecified dimensional tolerance are +/-0.5mm

<DETAIL DESCRIPTION OF SIDE MOUNTING SCREW>

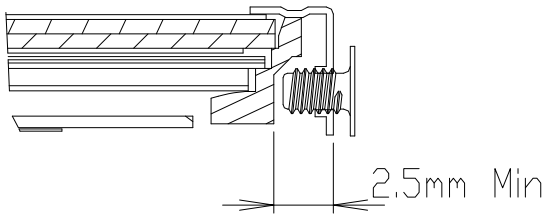

SECTION H1-H1

*SCREW(8EA) TORQUE : 2.5kgf.cm max
*Screw Length : max 2.5, min2.0

6. Reliability

Environment test condition

No.	Test Item	Conditions
1	High temperature storage test	Ta= 60˚C 240h
2	Low temperature storage test	Ta= -20˚C 240h
3	High temperature operation test	Ta= 50˚C 50%RH 240h
4	Low temperature operation test	Ta= 0˚C 240h
5	Vibration test (non-operating)	Sine wave, 10 ~ 500 ~ 10Hz, 1.5G, 0.37oct/min 3 axis, 1hour/axis
6	Shock test (non-operating)	Half sine wave, 180G, 2ms one shock of each face (i.e. run 180G 2ms for all six faces)
7	Altitude operating storage / shipment	 0 - 10,000 feet(3,048m) 0 - 40,000 feet(12,192m)

{ Result Evaluation Criteria }
There should be no change which might affect the practical display function when the display quality test is conducted under normal operating condition.

7. International Standards

7-1. Safety

a) UL 60950-1:2003, First Edition, Underwriters Laboratories, Inc.,
Standard for Safety of Information Technology Equipment.
b) CAN/CSA C22.2, No. 60950-1-03 1st Ed. April 1, 2003, Canadian Standards Association,
Standard for Safety of Information Technology Equipment.
c) EN 60950-1:2001, First Edition,
European Committee for Electrotechnical Standardization(CENELEC)
European Standard for Safety of Information Technology Equipment.

7-2. EMC

a) ANSI C63.4 "Methods of Measurement of Radio-Noise Emissions from Low-Voltage Electrical and Electrical Equipment in the Range of 9kHZ to 40GHz. "American National Standards Institute(ANSI), 1992
b) C.I.S.P.R "Limits and Methods of Measurement of Radio Interface Characteristics of Information Technology Equipment." International Special Committee on Radio Interference.
c) EN 55022 "Limits and Methods of Measurement of Radio Interface Characteristics of Information Technology Equipment." European Committee for Electrotechnical Standardization.(CENELEC), 1998 (Including A1: 2000)

8. Packing

8-1. Designation of Lot Mark

a) Lot Mark

A	B	C	D	E	F	G	H	I	J	K	L	M

A,B,C : SIZE(INCH)
E : MONTH
D : YEAR
F ~ M : SERIAL NO.

Note

1. YEAR

Year	2001	2002	2003	2004	2005	2006	2007	2008	2009	2010
Mark	1	2	3	4	5	6	7	8	9	0

2. MONTH

Month	Jan	Feb	Mar	Apr	May	Jun	Jul	Aug	Sep	Oct	Nov	Dec
Mark	1	2	3	4	5	6	7	8	9	A	B	C

b) Location of Lot Mark

Serial No. is printed on the label. The label is attached to the backside of the LCD module.
This is subject to change without prior notice.

8-2. Packing Form

a) Package quantity in one box : 20 pcs

b) Box Size : 395mm ×390mm × 309mm

9. PRECAUTIONS

Please pay attention to the following when you use this TFT LCD module.

9-1. MOUNTING PRECAUTIONS

(1) You must mount a module using holes arranged in four corners or four sides.
(2) You should consider the mounting structure so that uneven force(ex. Twisted stress) is not applied to the module.
And the case on which a module is mounted should have sufficient strength so that external force is not transmitted directly to the module.
(3) Please attach a transparent protective plate to the surface in order to protect the polarizer.
Transparent protective plate should have sufficient strength in order to the resist external force.
(4) You should adopt radiation structure to satisfy the temperature specification.
(5) Acetic acid type and chlorine type materials for the cover case are not describe because the former generates corrosive gas of attacking the polarizer at high temperature and the latter causes circuit break by electro-chemical reaction.
(6) Do not touch, push or rub the exposed polarizer with glass, tweezers or anything harder than HB pencil lead. And please do not rub with dust clothes with chemical treatment.
Do not touch the surface of polarizer for bare hand or greasy cloth.(Some cosmetics are determined to the polarizer.)
(7) When the surface becomes dusty, please wipe gently with absorbent cotton or other soft materials like chamois soaks with petroleum benzene. Normal-hexane is recommended for cleaning the adhesives used to attach front / rear polarizer. Do not use acetone, toluene and alcohol because they cause chemical damage to the polarizer.
(8) Wipe off saliva or water drops as soon as possible. Their long time contact with polarizer causes deformations and color fading.
(9) Do not open the case because inside circuits do not have sufficient strength.

9-2. OPERATING PRECAUTIONS

(1) The spike noise causes the mis-operation of circuits. It should be lower than following voltage :
V=±200mV(Over and under shoot voltage)
(2) Response time depends on the temperature.(In lower temperature, it becomes longer.)
(3) Brightness depends on the temperature. (In lower temperature, it becomes lower.)
And in lower temperature, response time(required time that brightness is stable after turned on) becomes longer.
(4) Be careful for condensation at sudden temperature change. Condensation makes damage to polarizer or electrical contacted parts. And after fading condensation, smear or spot will occur.
(5) When fixed patterns are displayed for a long time, remnant image is likely to occur.
(6) Module has high frequency circuits. Sufficient suppression to the electromagnetic interference shall be done by system manufacturers. Grounding and shielding methods may be important to minimized the interference.

9-3. ELECTROSTATIC DISCHARGE CONTROL

Since a module is composed of electronic circuits, it is not strong to electrostatic discharge. Make certain that treatment persons are connected to ground through wrist band etc. And don't touch interface pin directly.

9-4. PRECAUTIONS FOR STRONG LIGHT EXPOSURE

Strong light exposure causes degradation of polarizer and color filter.

9-5. STORAGE

When storing modules as spares for a long time, the following precautions are necessary.

(1) Store them in a dark place. Do not expose the module to sunlight or fluorescent light. Keep the temperature between 5˚C and 35˚C at normal humidity.

(2) The polarizer surface should not come in contact with any other object.
It is recommended that they be stored in the container in which they were shipped.

9-6. HANDLING PRECAUTIONS FOR PROTECTION FILM

(1) When the protection film is peeled off, static electricity is generated between the film and polarizer. This should be peeled off slowly and carefully by people who are electrically grounded and with well ion-blown equipment or in such a condition, etc.

(2) The protection film is attached to the polarizer with a small amount of glue. If some stress is applied to rub the protection film against the polarizer during the time you peel off the film, the glue is apt to remain on the polarizer.
Please carefully peel off the protection film without rubbing it against the polarizer.

(3) When the module with protection film attached is stored for a long time, sometimes there remains a very small amount of glue still on the polarizer after the protection film is peeled off.

(4) You can remove the glue easily. When the glue remains on the polarizer surface or its vestige is recognized, please wipe them off with absorbent cotton waste or other soft material like chamois soaked with normal-hexane.

APPENDIX A. Enhanced Extended Display Identification Data (EEDID™) 1/3

LP154WE2-TLB2 EDID(5E) DATA Ver0.3 2007-09-17

	Byte (dec)	Byte (hex)	Field Name and Comments	Value (hex)	Value (binary)
Header	0	00	Header	00	00000000
	1	01	Header	FF	11111111
	2	02	Header	FF	11111111
	3	03	Header	FF	11111111
	4	04	Header	FF	11111111
	5	05	Header	FF	11111111
	6	06	Header	FF	11111111
	7	07	Header	00	00000000
Vendor / Product EDID Version	8	08	EISA manufacture code (3 Character ID) LPL	32	00110010
	9	09	EISA manufacture code (Compressed ASCII)	0C	00001100
	10	0A	Panel Supplier Reserved - Product Code 010Fh	0F	00001111
	11	0B	(Hex. LSB first)	01	00000001
	12	0C	LCD Module Serial No - Preferred but Optional ("0" If not used)	00	00000000
	13	0D	LCD Module Serial No - Preferred but Optional ("0" If not used)	00	00000000
	14	0E	LCD Module Serial No - Preferred but Optional ("0" If not used)	00	00000000
	15	0F	LCD Module Serial No - Preferred but Optional ("0" If not used)	00	00000000
	16	10	Week of Manufacture : 00 weeks	00	00000000
	17	11	Year of Manufacture 2007 year	11	00010001
	18	12	EDID structure version # = 1	01	00000001
	19	13	EDID revision # = 3	03	00000011
Display Parameters	20	14	Video input Definition = Digital signal, 6 bit _ Dell only	90	10010000
	21	15	Max H image size (Rounded cm) = 33 cm	21	00100001
	22	16	Max V image size (Rounded cm) = 21 cm	15	00010101
	23	17	Display gamma = (gamma*100)-100 = Example:(2.2*100)-100=120 = 2.2 Gamma	78	01111000
	24	18	Feature Support (no_DPMS, no_Active Off/Very Low Power, RGB color display, Timing BLK 1,no_ GTF)	0A	00001010
Panel Color Coordinates	25	19	Red/Green Low Bits (RxRy/GxGy)	19	00011001
	26	1A	Blue/White Low Bits (BxBy/WxWy)	45	01000101
	27	1B	Red X Rx = 0.59	97	10010111
	28	1C	Red Y Ry =0.345	58	01011000
	29	1D	Green X Gx = 0.326	53	01010011
	30	1E	Green Y Gy =0.544	8B	10001011
	31	1F	Blue X Bx = 0.157	28	00101000
	32	20	Blue Y By = 0.141	24	00100100
	33	21	White X Wx =0.313	50	01010000
	34	22	White Y Wy =0.329	54	01010100
Established Timin	35	23	Established timing 1 (00h if nt used)	00	00000000
	36	24	Established timing 2 (00h if nt used)	00	00000000
	37	25	Manufacturer's timings (00h if nt used)	00	00000000
Standard Timing ID	38	26	Standard timing ID1 (01h if not used)	01	00000001
	39	27	Standard timing ID1 (01h if not used)	01	00000001
	40	28	Standard timing ID2 (01h if not used)	01	00000001
	41	29	Standard timing ID2 (01h if not used)	01	00000001
	42	2A	Standard timing ID3 (01h if not used)	01	00000001
	43	2B	Standard timing ID3 (01h if not used)	01	00000001
	44	2C	Standard timing ID4 (01h if not used)	01	00000001
	45	2D	Standard timing ID4 (01h if not used)	01	00000001
	46	2E	Standard timing ID5 (01h if not used)	01	00000001
	47	2F	Standard timing ID5 (01h if not used)	01	00000001
	48	30	Standard timing ID6 (01h if not used)	01	00000001
	49	31	Standard timing ID6 (01h if not used)	01	00000001
	50	32	Standard timing ID7 (01h if not used)	01	00000001
	51	33	Standard timing ID7 (01h if not used)	01	00000001
	52	34	Standard timing ID8 (01h if not used)	01	00000001
	53	35	Standard timing ID8 (01h if not used)	01	00000001

APPENDIX A. Enhanced Extended Display Identification Data (EEDID™) 2/3

	Byte (dec)	Byte (hex)	Field Name and Comments	Value (HEX)	Value (binary)
Timing Descriptor #1	54	36	Pixel Clock/10,000 (LSB) 121.7 MHz @ 60.02Hz	8A	10001010
	55	37	Pixel Clock/10,000 (MSB)	2F	00101111
	56	38	Horizontal Active (lower 8 bits) 1680 Pixels	90	10010000
	57	39	Horizontal Blanking(Thp-HA) (lower 8 bits) 224 Pixels	E0	11100000
	58	3A	Horizontal Active / Horizontal Blanking(Thp-HA) (upper 4:4bits)	60	01100000
	59	3B	Vertical Avtive 1050 Lines	1A	00011010
	60	3C	Vertical Blanking (Tvp-HA) (DE Blanking typ.for DE only panels) 15 Lines	0F	00001111
	61	3D	Vertical Active : Vertical Blanking (Tvp-HA) (upper 4:4bits)	40	01000000
	62	3E	Horizontal Sync. Offset (Thfp) 32 Pixels	20	00100000
	63	3F	Horizontal Sync Pulse Width (HSPW) 64 Pixels	40	01000000
	64	40	Vertical Sync Offset(Tvfp) : Sync Width (VSPW) 2 Lines : 5 Lines	25	00100101
	65	41	Horizontal Vertical Sync Offset/Width (upper 2bits)	00	00000000
	66	42	Horizontal Image Size (mm) 331 mm	4B	01001011
	67	43	Vertical Image Size (mm) 207 mm	CF	11001111
	68	44	Horizontal Image Size / Vertical Image Size	10	00010000
	69	45	Horizontal Border = 0 (Zero for Notebook LCD)	00	00000000
	70	46	Vertical Border = 0 (Zero for Notebook LCD)	00	00000000
	71	47	Non-Interlace, Normal display, no stereo, Digital Separate (Vsync_NEG, Hsync_POS), DE only note : LSB is set to '1' if panel is DE-timing only. H/V can be ignored.	1B	00011011
Timing Descriptor #2	72	48	Pixel Clock/10,000 (LSB) 121.7 MHz @ 60.02Hz	8A	10001010
	73	49	Pixel Clock/10,000 (MSB)	2F	00101111
	74	4A	Horizontal Active (lower 8 bits) 1680 Pixels	90	10010000
	75	4B	Horizontal Blanking(Thp-HA) (lower 8 bits) 224 Pixels	E0	11100000
	76	4C	Horizontal Active / Horizontal Blanking(Thp-HA) (upper 4:4bits)	60	01100000
	77	4D	Vertical Avtive 1050 Lines	1A	00011010
	78	4E	Vertical Blanking (Tvp-HA) (DE Blanking typ.for DE only panels) 15 Lines	0F	00001111
	79	4F	Vertical Active : Vertical Blanking (Tvp-HA) (upper 4:4bits)	40	01000000
	80	50	Horizontal Sync. Offset (Thfp) 32 Pixels	20	00100000
	81	51	Horizontal Sync Pulse Width (HSPW) 64 Pixels	40	01000000
	82	52	Vertical Sync Offset(Tvfp) : Sync Width (VSPW) 2 Lines : 5 Lines	25	00100101
	83	53	Horizontal Vertical Sync Offset/Width (upper 2bits)	00	00000000
	84	54	Horizontal Image Size (mm) 331 mm	4B	01001011
	85	55	Vertical Image Size (mm) 207 mm	CF	11001111
	86	56	Horizontal Image Size / Vertical Image Size	10	00010000
	87	57	Horizontal Border = 0 (Zero for Notebook LCD)	00	00000000
	88	58	Vertical Border = 0 (Zero for Notebook LCD)	00	00000000
	89	59	Non-Interlace, Normal display, no stereo, Digital Separate (Vsync_NEG, Hsync_POS), DE only note : LSB is set to '1' if panel is DE-timing only. H/V can be ignored.	1B	00011011
Timing Descriptor #3	90	5A	Flag	00	00000000
	91	5B	Flag	00	00000000
	92	5C	Flag	00	00000000
	93	5D	Data Type Tag : Alphanumeric Data String (ASCII String)	FE	11111110
	94	5E	Flag	00	00000000
	95	5F	Dell P/N 1st Character = X	58	01011000
	96	60	Dell P/N 2nd Character = K	4B	01001011
	97	61	Dell P/N 3rd Character = 3	33	00110011
	98	62	Dell P/N 4th Character = 0	30	00110000
	99	63	Dell P/N 5th Character = 9	39	00111001
	100	64	EDID Revision Build Name = MP(X-Build) , Revision # = A01	81	10000001
	101	65	Manufacturer P/N = 1	31	00110001
	102	66	Manufacturer P/N = 5	35	00110101
	103	67	Manufacturer P/N = 4	34	00110100
	104	68	Manufacturer P/N = W	57	01010111
	105	69	Manufacturer P/N = E	45	01000101
	106	6A	Manufacturer P/N = 2	32	00110010
	107	6B	Manufacturer P/N(If<13 char--> 0Ah, then terminate with ASCII code 0Ah,set remaining char = 20h)	0A	00001010

APPENDIX A. Enhanced Extended Display Identification Data (EEDID™) 3/3

	Byte (dec)	Byte (hex)	Field Name and Comments	Value (HEX)	Value (binary)
Timing Descriptor #4	108	6C	Flag	00	00000000
	109	6D	Flag	00	00000000
	110	6E	Flag	00	00000000
	111	6F	Data Type Tag : Descriptor Defined by manufacturer	00	00000000
	112	70	Flag	00	00000000
	113	71	SMBUS Value(Step #1) = 10 nits	29	00101001
	114	72	SMBUS Value(Step #2) = 17 nits	3C	00111100
	115	73	SMBUS Value(Step #3) = 24 nits	4F	01001111
	116	74	SMBUS Value(Step #4) = 30 nits	57	01010111
	117	75	SMBUS Value(Step #5) = 60 nits	7C	01111100
	118	76	SMBUS Value(Step #6) = 110 nits	99	10011001
	119	77	SMBUS Value(Step #7) = 150 nits	BE	10111110
	120	78	SMBUS Value(Step #8) = Max nits (Typically = 00h, XXX nits)	FF	11111111
	121	79	Dual channel LVDS, No RTC support	02	00000010
	122	7A	BIST support	01	00000001
	123	7B	(If<13 char--> 0Ah, then terminate with ASCⅡ code 0Ah,set remaining char = 20h)	0A	00001010
	124	7C	(If<13 char--> 0Ah, then terminate with ASCⅡ code 0Ah,set remaining char = 20h)	20	00100000
	125	7D	(If<13 char--> 0Ah, then terminate with ASCⅡ code 0Ah,set remaining char = 20h)	20	00100000
Checksum	126	7E	Extension flag (# f optional 128 panel ID extension block to follow, Typ = 0)	00	00000000
	127	7F	Check Sum (The 1-byte sum of all 128 bytes in this panel ID block shall = 0)	5E	01011110