SPECIFICATION

FOR

APPROVAL

( ) Preliminary Specification
(◆) Final Specification

Title	15.0" XGA TFT LCD

BUYER	DID
MODEL	

SUPPLIER	LG.Philips LCD Co., Ltd.
*MODEL	LS150X03
SUFFIX	A3

* When you obtain standard approval , please use the above model name without suffix.

SIGNATURE	DATE
/	
/	
/	

Please return 1 copy for your confirmation with your signature and comments.

APPROVED BY	DATE
Paul. Lee / G. Manager	
REVIEWED BY	
S. G. Hong / S.Engineer	
PREPARED BY	
S. S. Kim / Engineer	

Product Engineering Dept.
LG.Philips LCD Co., Ltd.

CONTENTS

NO.	ITEM	Page
-	COVER	1
-	CONTENTS	2
-	RECORDS OF REVISIONS	3
1	GENERAL DESCRIPTION	4
2	ABSOLUTE MAXIMUM RATINGS	5
3	ELECTRICAL SPECIFICATIONS	6
3-1	ELECTRICAL CHARACTERISTICS	6
3-2	INTERFACE CONNECTIONS	9
3-3	SIGNAL TIMING SPECIFICATIONS	12
3-4	SIGNAL TIMING WAVEFORMS	13
3-5	COLOR INPUT DATA REFERENCE	15
3-6	POWER SEQUENCE	16
4	OPTICAL SPECIFICATIONS	18
5	MECHANICAL CHARACTERISTICS	22
6	RELIABILITY	25
7	INTERNATIONAL STANDARDS	26
7-1	SAFETY	26
7-2	EMC	26
8	PACKING	27
8-1	DESIGNATION OF LOT MARK	27
8-2	PACKING FORM	27
9	PRECAUTIONS	28

RECORDS OF REVISIONS

Version No	Date	Page	DESCRIPTION	Page
0.0	DEC.08,2001		First draft. .	

1. General Description

The LS150X03 is a Color Active Matrix Liquid Crystal Display with an integral Cold Cathode Fluorescent Lamp(CCFL) back light system. The matrix employs a-Si Thin Film Transistor as the active element. It is a transmissive type display operating in the normally white mode. This TFT-LCD has a 15.0 inch diagonally measured active display area with XGA resolution(768 vertical by 1024 horizontal pixel array). Each pixel is divided into Red, Green and Blue sub-pixels or dots which are arranged in vertical stripes.

The LS150X03 LCD is intended to support applications where high brightness, wide viewing angle, high color saturation, and high color depth are very important. In combination with the vertical arrangement of the sub-pixels, the LS150X03 characteristics provide an excellent flat panel display for office automation products such as monitors.

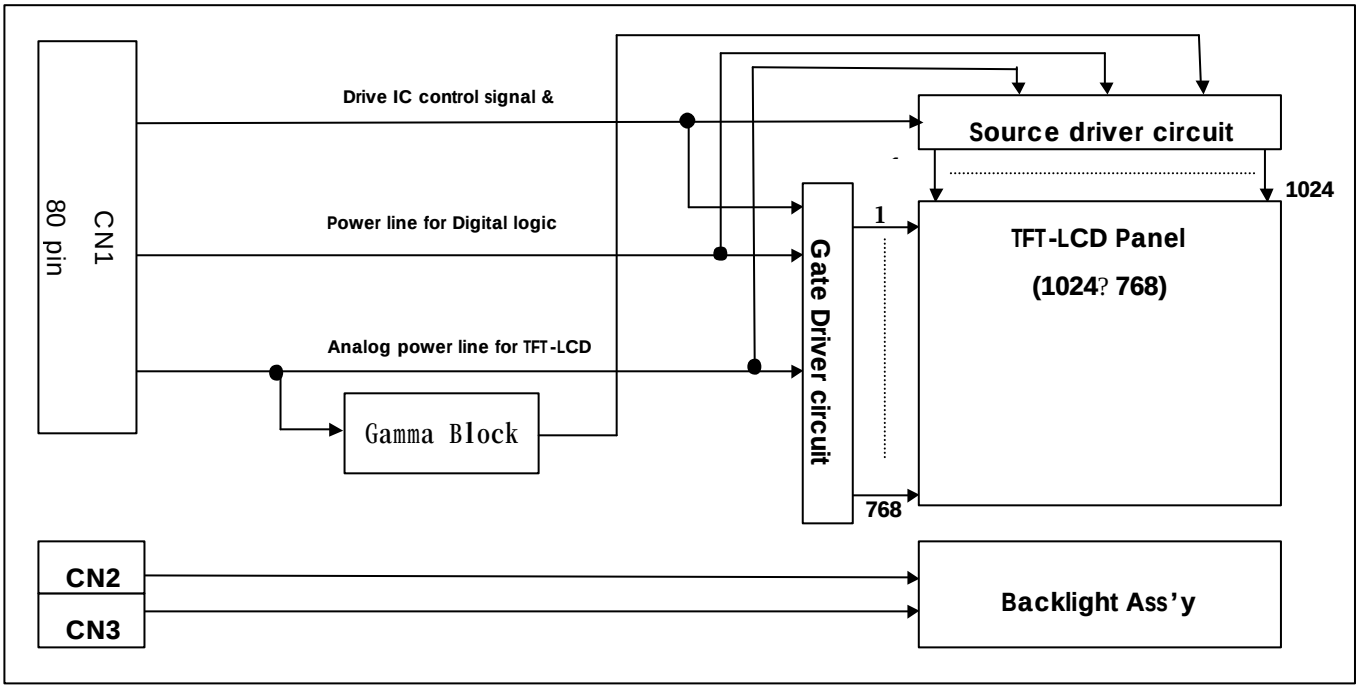

General Features

Active screen size	15.0 inches(38.016cm) diagonal
Outline dimensions	326(H) X 254(V) X 11.5(D)mm(typ.)
Pixel pitch	0.297mm x 0.297mm
Pixel format	1024 horiz. By 768 vert. pixels
	RGB stripe arrangement
Color depth	6-bits
Luminance, white	250 cd/㎡ (typ.)
Power Consumption	10.44W
Weight	1100 g (typ.)
Display operating mode	Transmissive mode, normally white
Surface treatments	Hard coating(3H)
	Anti-glare treatment of the front polarizer

2. Absolute Maximum Ratings

The following are maximum values which, if exceeded, may cause faulty operation or damage to the unit.

Table 1 ABSOLUTE MAXIMUM RATINGS

Parameter	Symbol	Min.	Max.	Units	Notes
Digigal Voltage Supply	DVCC	-0.3	+3.6	V	1
Digital input data Voltage	Vi	-0.3	DVcc+0.3	V	1
Analog Power Supply Voltage	AVDD	-0.3	11.0	V	1
VGH (Gate On)	VGH	-10	20	V	1
VGL (Gate Off)	VGL	-10	+0.3	V	1
Operating Temperature	TOPTST	0	50	℃	2
Storage temperature	HST	-20	60	℃	
Operation ambient Humidity	HST	10	90	%	
Storage Humidity		10	90	%	

If the LSI is used beyond the above maximum ratings,it may be permanently damaged. It should always be used Within its specified operating range for normal operation to prevent malfunction or degraded reliability.

Note :

1. Value when GND = 0.0V
2. Temperature and relative humidity range are shown in the figure below.
   Wet bulb temperature should be 39 ℃ Max, and no condensation of water.

90%

-20

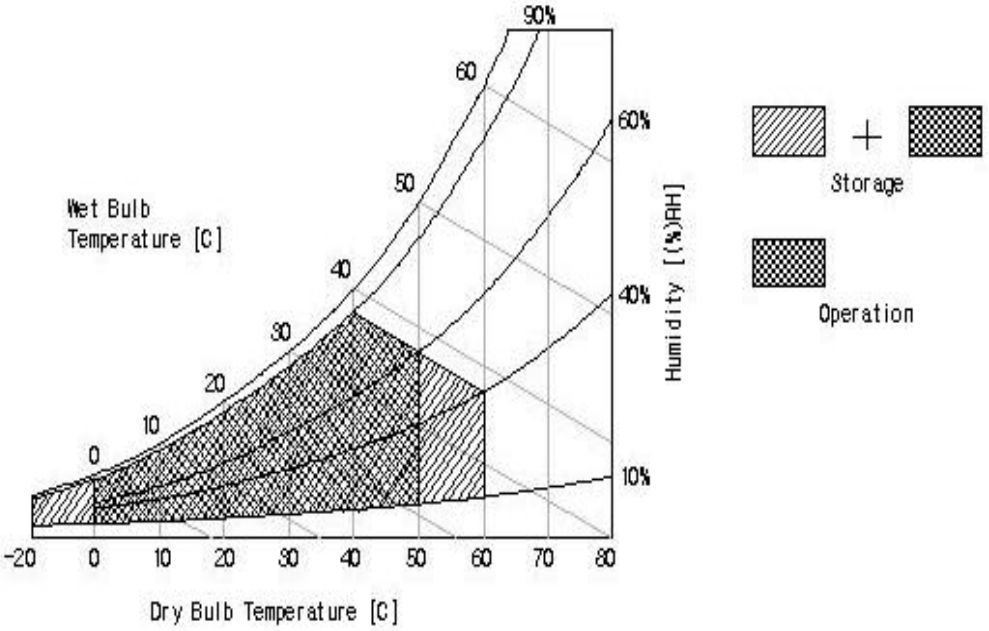

3. Electrical Specifications

3-1. Electrical Characteristics

Table 2. Electrical Characteristics

Parameter	Symbol	Values			Units	Notes
		Min.	Typ.	Max.		
Data high level Voltage	V_{iH}	0.7xDVCC	-	DVcc	V	
Data low level Voltage	V_{iL}	0	-	0.3xDVCC	V	
Digital Voltage Supply	DVcc	3.15	3.3	3.45	V	1
Digigal Current Supply	DIcc	-	-	0.5	A	
Analog Power Supply Voltage	AV_{DD}	9.45	9.6	9.75	V	2
Analog Power Supply Current	AIDD	-	-	0.5	A	
Gate On Power Supply Voltage	VGH	17.5	18.0	18.5	V	3
Gate On Power Supply Current	I_{VGH}	-	-	50	mA	
Gate Off Power Supply Voltage	VGL	-5.4	-5.2	-5.0	V	4
Gate Off Power Supply Current	I_{VGL}	-		30	mA	
Panel Control (common voltage)	VCOM	3.3	3.8	4.3	V	
Panel Control Current(common voltage)	IVCOM	-	-	0.1	A	
Inrush Current(DVcc)	Iic	-	-	1.5	A	5

Note 1.The variance of voltage is 5%,(The ripple of voltage ≤±50mV)

2.The variance of voltage is 1.5%, (The ripple of voltage ≤±50mV)

3.The variance of voltage is 2.5%, (The ripple of voltage ≤±50mV)

4.The variance of voltage is 2.5%, (The ripple of voltage ≤±50mV)

5.The variance of voltage is 1.5%, (The ripple of voltage ≤±50mV)

Table 2 Lamp Electrical Characteristics:

Parameter	Symbol	Values			Units	Notes
		Min.	Typ.	Max.		
LAMP						
Operating Voltage	V_{BL}	570(9mA)	590(8 mA)	710(3mA)	V_{RMS}	4
Operating Current	I_{BL}	3.0	8.0	9.0	mA	
Established Starting Voltage	V_{BS}					5
at 25℃		-	-	860	V_{RMS}	
at 0℃		-	-	1200	V_{RMS}	
Operating Frequency	f_{BL}	45	60	80	kHz	6
Discharge Stabilization Time	T_S			3	Minutes	7
Power Consumption(2 CCFL's)	P_{BL}	-	9.44	10.39	Watts	8
Life Time		40000		-	Hrs	9

Note. The design of the inverter must have specifications for the lamp in LCD Assembly.
The performance of the Lamp in LCM, for example life time or brightness, is extremely influenced by the characteristics of the DC-AC Inverter. So all the parameters of an inverter should be carefully designed so as not to produce too much leakage current from high-voltage output of the inverter.
When you design or order the inverter, please make sure unwanted lighting caused by the mismatch of the lamp and the inverter(no lighting,flicker,etc) never occurs.When you confirm it,the LCD Assembly should be operated in the same condition as installed in your instrument.

Note. Do not attach a conducting tape to lamp connecting wire.. If the lamp wire attach to conducting tape, TFT-LCD Module have a low luminance and the inverter has abnormal action because leakage current occurs between lamp wire and conducting tape. 1. The specified current and power consumption are under the V_{CC}=3.3V, 25 ℃, f_V(frame frequency) =60Hz condition whereas mosaic(black & white) pattern shown in the [figure 3] is displayed.

2. The duration of rush current is about 20ms.
3. The variance of the voltage is ±10%.
4. The voltage above V_{BS} should be applied to the lamps for more than 1second for start-up. Otherwise,the lamps may not be turned on.
5. The output of the inverter must have symmetrical(negative and positive) voltage waveform and symmetrical current waveform.(Unsymmetrical ratio is less than 10%) Please do not use the inverter which has unsymmetrical voltage and unsymmetrical current and spike wave.

Lamp frequency may produce interference with horizontal synchronous frequency and as a result this

may cause beat on the display.Therefore lamp frequency shall be as away as possible from the horizontal synchronous frequency and from its harmonics in order to prevent interference.

6. Let' s define the brightness of the lamp after being lighted for 5 minutes as 100%.
   T_S is the time required for the brightness of the center of the lamp to be not less than 95%.
   The used lamp current is the lamp typical current.
7. The lamp power consumption shown above does not include loss of external inverter.
   The used lamp current is the lamp typical current.
8. The life time is determined as the time at which brightness of lamp is 50% compared to that of initial value at the typical lamp current on condition of continuous operating at 25 ±2℃.
9. Requirements for a system inverter design, which is intended to have a better display performance, a better power efficiency and a more reliable lamp.
   It shall help increase the lamp lifetime and reduce its leakage current.
   a. The unbalance rate of the inverter waveform should be 10% below;
   b. The distortion rate of the waveform should be within √2 ±10%;
   c. The ideal sine wave form shall be symmetric in positive and negative polarities.

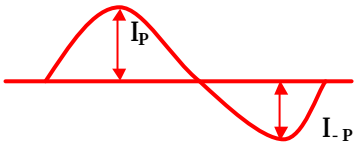

* Asymmetry rate = $| I_p - I_{-p} | / I_{rms}$ * 100%
* Distortion rate = I_p (or I_{-p}) / I_{rms}

10. Inverter open voltage must be more than lamp starting voltage.

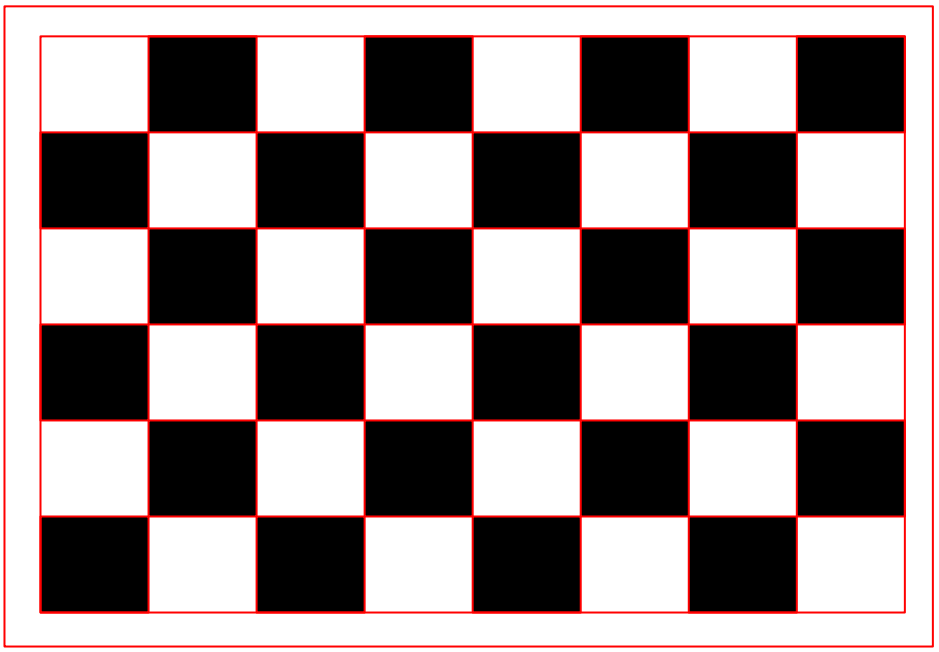

[figure 3] mosaic pattern for Power Consumption measurement

3-2. Interface Connections

Table 3 MODULE CONNECTOR PIN CONFIGURATION
(ODD Data : First Pixel, EVEN Data : Second Pixel)

This LCM has three interface connectors, a 80 pin connector is used for the module electronics and two three pin connectors are used for the integral back light system.

LCD Connector : 53475(53643) manufactured by Molex

Mating Connector : 52760(52885) manufactured by Molex

Pin	Symbol	Description	Pin	Symbol	Description
1	GND	Ground	2	GND	Ground
3	GND	Ground	4	GND	Ground
5	SSC	Source Shift Clock	6	GE0	Green Data 0 (Even)
7	GND	Ground	8	GE1	Green Data 1 (Even)
9	RE5	Red Data 5 (Even)	10	GE2	Green Data 2 (Even)
11	RE4	Red Data 4 (Even)	12	GE3	Green Data 3 (Even)
13	RE3	Red Data 3 (Even)	14	GE4	Green Data 4 (Even)
15	RE2	Red Data 2 (Even)	16	GE5	Green Data 5 (Even)
17	RE1	Red Data 1 (Even)	18	GND	Ground
19	RE0	Red Data 0 (Even)	20	BE0	Blue Data 0 (Even)
21	GND	Ground	22	BE1	Blue Data 1 (Even)
23	BO5	Blue Data 5 (Odd)	24	BE2	Blue Data 2 (Even)
25	BO4	Blue Data 4 (Odd)	26	BE3	Blue Data 3 (Even)
27	BO3	Blue Data 3 (Odd)	28	BE4	Blue Data 4 (Even)
29	BO2	Blue Data 2 (Odd)	30	BE5	Blue Data 5 (Even)
31	BO1	Blue Data 1 (Odd)	32	GND	Ground
33	BO0	Blue Data 0 (Odd)	34	SOE	Source Output Enable
35	GND	Ground	36	INVERT	Invert Input Data
37	GO5	Green Data 5 (Odd)	38	GND	Ground
39	GO4	Green Data 4 (Odd)	40	SSP	Source Start Pulse
41	GO3	Green Data 3 (Odd)	42	GND	Ground
43	GO2	Green Data 2 (Odd)	44	GSP	Gate Start Pulse
45	GO1	Green Data 1 (Odd)	46	GSC	Gate Shift Clock
47	GO0	Green Data 0 (Odd)	48	GOE	Gate Output Enable
49	GND	Ground	50	GND	Ground
51	RO5	Red Data 5(Odd)	52	VCOM	Panel Control (Common Voltage)
53	RO4	Red Data 4 (Odd)	54	VCOM	Panel Control (Common Voltage)
55	RO3	Red Data 3 (Odd)	56	VCOM	Panel Control (Common Voltage)
57	RO2	Red Data 2 (Odd)	58	VGH	Panel Control (Gate On)
59	RO1	Red Data 1 (Odd)	60	VGH	Panel Control (Gate On)
61	RO0	Red Data 0 (Odd)	62	VGH	Panel Control (Gate On)
63	GND	Ground	64	VGL	Panel Control (Gate Off)
65	POL	Manual Polarity	66	VGL	Panel Control (Gate Off)
67	GND	Ground	68	VGL	Panel Control (Gate Off)
69	DVCC	Digital Voltage Supply(3.3V)	70	DVCC	Digital Voltage Supply(3.3V)
71	DVCC	Digital Voltage Supply(3.3V)	72	DVCC	Digital Voltage Supply(3.3V)
73	AVDD	Analog Power Supply Voltage	74	AVDD	Analog Power Supply Voltage
75	AVDD	Analog Power Supply Voltage	76	AVDD	Analog Power Supply Voltage
77	GND	Ground	78	GND	Ground
79	GND	Ground	80	GND	Ground

Pin Function

Pin No.	Symbol	Description
36	INVERT	Data polarity inversion to reduce power consumption of data bus lines. When INVERT is high, display data is inverted in the driver IC. When INVERT is low, display data is input without being inverted in the

Pixel assignment of LCD active

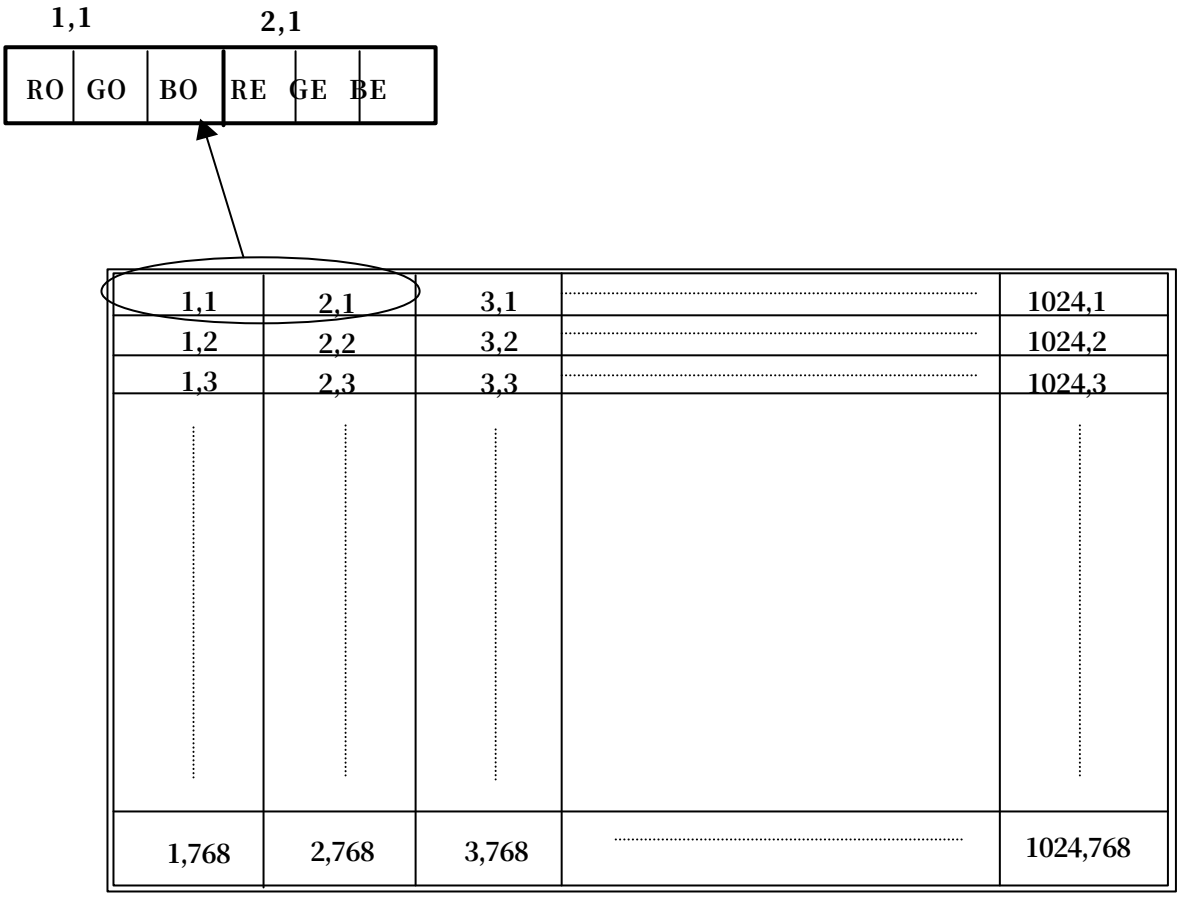

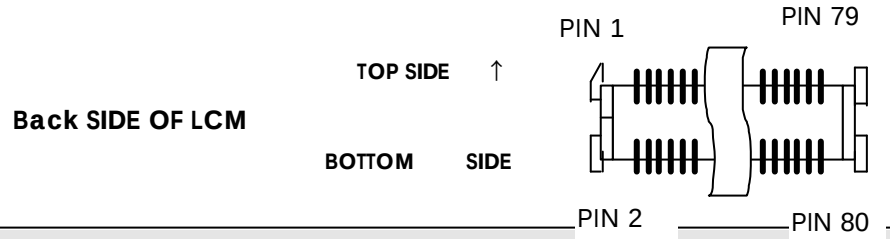

The backlight interface connector is a model BHR-03VS-1, manufactured by JST. The mating connector part number is SM02(8.0)B-BHS-1-TB or equivalent. The pin configuration for the connector is shown in the table below.

Table 4 BACKLIGHT CONNECTOR PIN CONFIGURATION

Pin	Symbol	Description	Notes
1	HV	Lamp power input(High)	1
2	NC	No connect	
3	LV	Lamp power input(Low)	

Notes: 1. The input power terminal (High) is colored pink.

3-3. Signal Timing Specifications

All of the interface signal timing should be satisfied with the following specifications for it' s proper operation.

Table 5 Timing Table (Source and Gate Driver Control Signal)

ITEM		SYMBOL	MIN.	TYP.	MAX.	UNIT	NOTE
SSC	Frequency	f_{SSC}	27	32.5	34	Mhz	
	Period	t_{SSC}	29.4	30.7	37.5	nsec	
	Width_High	t_{WCH}	6	-	-	nsec.	
	Width_Low	t_{WCL}	6	-	-	nsec.	
	Pulse_height	t_{PH}	DVcc	-	DVcc+0.3	V	
SOE	Pulse Width	T_{SWD}	200	-	-	nsec.	
	Period	t_{HP}	572	672	684	t_{SSC}	
SSP	Pulse Width	T_{SPWD}		1	-	.t_{SSC}	
	Set-up Duration	T_{SPSD}	5	-	-	nsec.	
	Hold Duration	T_{SPHD}	5	-	-	nsec.	
	Period	t_{SPHP}	572	672	684	t_{SSC}	
Data	Set-up Duration	T_{SD}	5	-	-	nsec.	
	Hold Duration	T_{HD}	5	-	-	nsec.	
GSC	Period	T_{GSCP}	572	672	684	t_{SSC}	
	Width_high	T_{CPVH}	5	-	-	usec	
	Width_low	T_{CPVL}	5	-	-	usec	
GSP	Frequency	f_{GSP}	50	60	75	Hz	
	Period	T_{VP}	13.3	16.7	20.0	msec	
	Pulse Width	T_{GPWD}	-	1	-	T_{GSCP}	
	Setup_Duration	T_{GSDC}	1	-	-	usec	
	Hold_Duration	T_{GHD}	1	-	-	usec	
GOE	Pulse Width	T_{GWD}	2.0	2.5	3.0	usec.	
	Period	T_{GOEP}	572	672	684	t_{SSC}	
	Width_High	T_{GS}	2.0	2.5	4.0	usec	
	Set-up Duration	T_{OESP}	0.01	-	T_{GS} - 1	usec	

3-4. Signal Timing Waveforms

Source signal Ref Condition : DV_{CC} =3.3V
High level: 0.7 x DVcc
Low level : 0.3 x DVcc

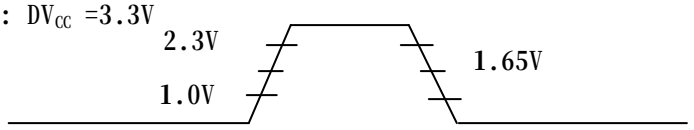

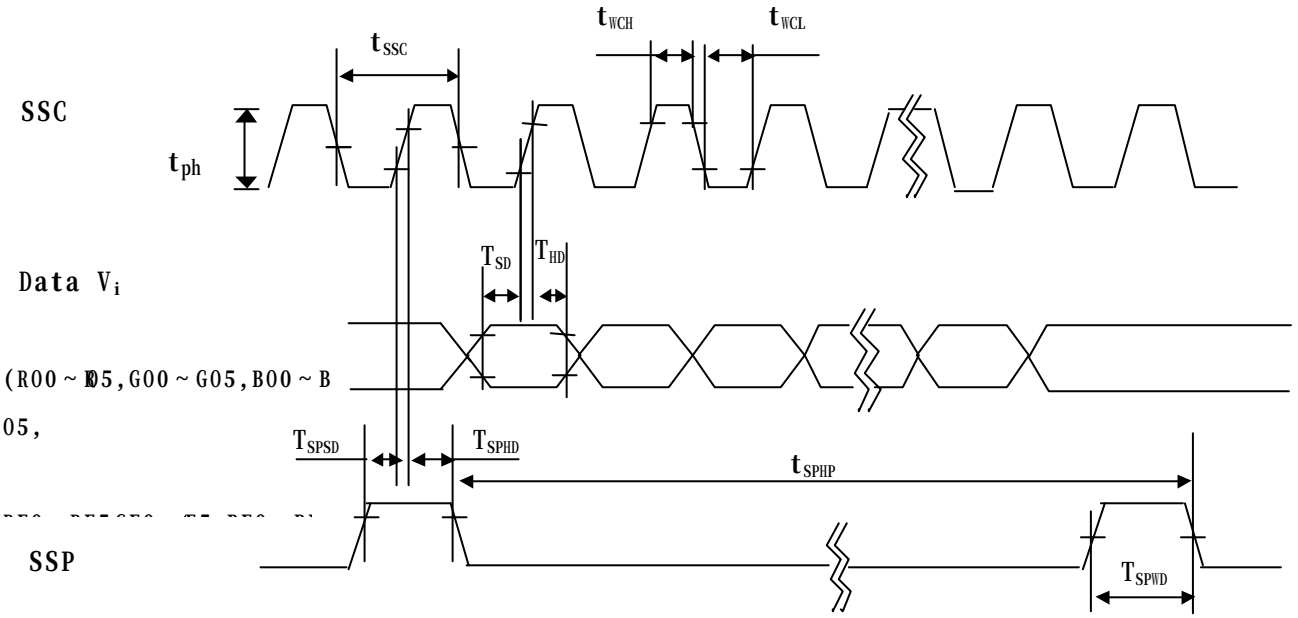

PIN 65 POL: Current -alternating signal,controlling liquid-crystal alternate current drive. the pol signalis input after provision of a setup time with respect to the rise of the soe signal. positive polarity and negative polarity output voltages are generated as shown below according to the polarity of the latched pol signal.

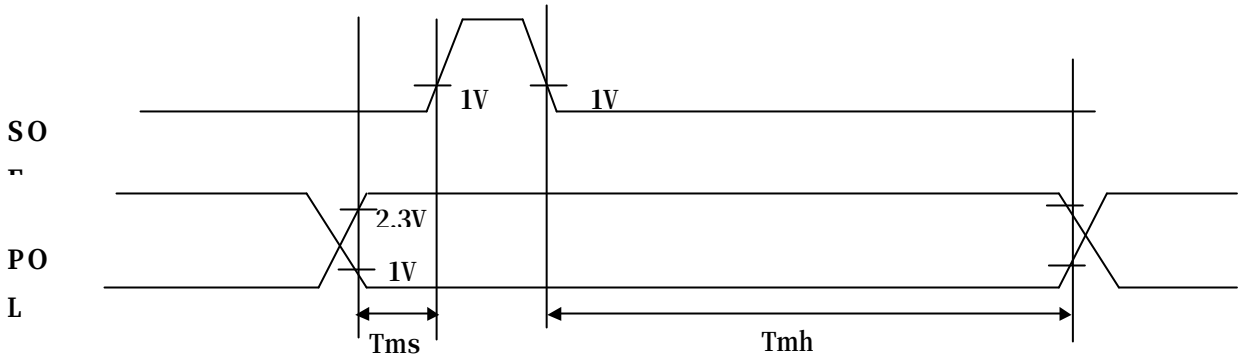

item	symbol	Applications pins	Min	typ	max	unit
Pol setup time	Tms	Soe, pol	5	-	-	ns
Pol hold time	Tmh	Soe, pol	5	-	-	ns

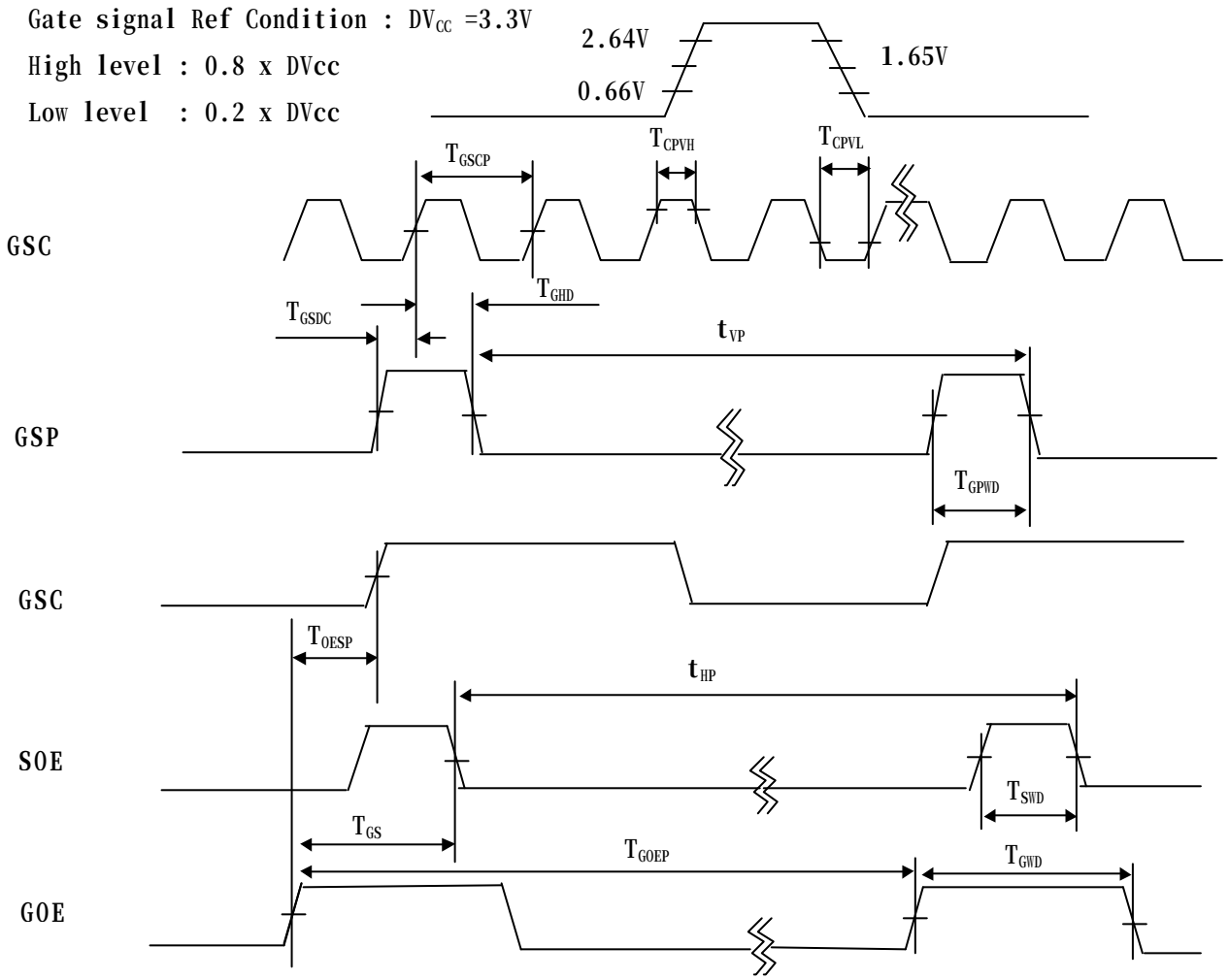

Rising/Falling time of Gate signal

ITEM	SYMBOL	MIN	MAX	UNIT	NOTE
Gate input signal rising time	Tr_in	-	100	ns	1
Gate input signal falling time	Tf_in	-	100	ns	2

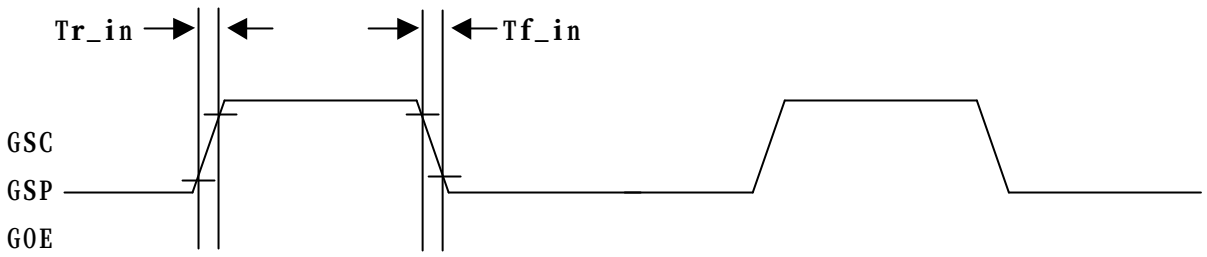

Note 1. Value from 0.1x DVcc to 0.9 x DVcc

2. Value from 0.9x DVcc to 0.1 x DVcc

3-5. Color Input Data Reference

The brightness of each primary color(red, green and blue) is based on the 8bit gray scale data input for the color; the higher the binary input, the brighter the color. The table below provides a reference for color versus data input.

Table 7 COLOR DATA REFERENCE

Color		Input Color Data																	
		Red						Green						Blue					
		MSB					LSB	MSB					LSB	MSB					LSB
		R5	R4	R3	R2	R1	R0	G5	G4	G3	G2	G1	G0	B5	B4	B3	B2	B1	B0
Basic Colors	Black	0	0	0	0	0	0	0	0	0	0	0	0	0	0	0	0	0	0
	Red(255)	1	1	1	1	1	1	0	0	0	0	0	0	0	0	0	0	0	0
	Green(255)	0	0	0	0	0	0	1	1	1	1	1	1	0	0	0	0	0	0
	Blue(255)	0	0	0	0	0	0	0	0	0	0	0	0	1	1	1	1	1	1
	Cyan	0	0	0	0	0	0	1	1	1	1	1	1	1	1	1	1	1	1
	Magenta	1	1	1	1	1	1	0	0	0	0	0	0	1	1	1	1	1	1
	Yellow	1	1	1	1	1	1	1	1	1	1	1	1	0	0	0	0	0	0
	White	1	1	1	1	1	1	1	1	1	1	1	1	1	1	1	1	1	1
Red	Red(000) Dark	0	0	0	0	0	0	0	0	0	0	0	0	0	0	0	0	0	0
	Red(001)	0	0	0	0	0	1	0	0	0	0	0	0	0	0	0	0	0	0
	Red(002)	0	0	0	0	1	0	0	0	0	0	0	0	0	0	0	0	0	0
		:	:	:	:	:	:	:	:	:	:	:	:	:	:	:	:	:	:
	Red(253)	1	1	1	1	0	1	0	0	0	0	0	0	0	0	0	0	0	0
	Red(254)	1	1	1	1	1	0	0	0	0	0	0	0	0	0	0	0	0	0
	Red(255) Bright	1	1	1	1	1	1	0	0	0	0	0	0	0	0	0	0	0	0
Green	Green(000) Dark	0	0	0	0	0	0	0	0	0	0	0	0	0	0	0	0	0	0
	Green(001)	0	0	0	0	0	0	0	0	0	0	0	1	0	0	0	0	0	0
	Green(002)	0	0	0	0	0	0	0	0	0	0	1	0	0	0	0	0	0	0
		:	:	:	:	:	:	:	:	:	:	:	:	:	:	:	:	:	:
	Green(253)	0	0	0	0	0	0	1	1	1	1	0	1	0	0	0	0	0	0
	Green(254)	0	0	0	0	0	0	1	1	1	1	1	0	0	0	0	0	0	0
	Green(255) Bright	0	0	0	0	0	0	1	1	1	1	1	1	0	0	0	0	0	0
Blue	Blue(000)	0	0	0	0	0	0	0	0	0	0	0	0	0	0	0	0	0	0
	Dark	0	0	0	0	0	0	0	0	0	0	0	0	0	0	0	0	0	1
	Blue(001)	0	0	0	0	0	0	0	0	0	0	0	0	0	0	0	0	1	0
	Blue(002)	:	:	:	:	:	:	:	:	:	:	:	:	:	:	:	:	:	:
		0	0	0	0	0	0	0	0	0	0	0	0	1	1	1	1	0	1
	Blue(253)	0	0	0	0	0	0	0	0	0	0	0	0	1	1	1	1	1	0
	Blue(254)	0	0	0	0	0	0	0	0	0	0	0	0	1	1	1	1	1	1

3-6. Power Sequence

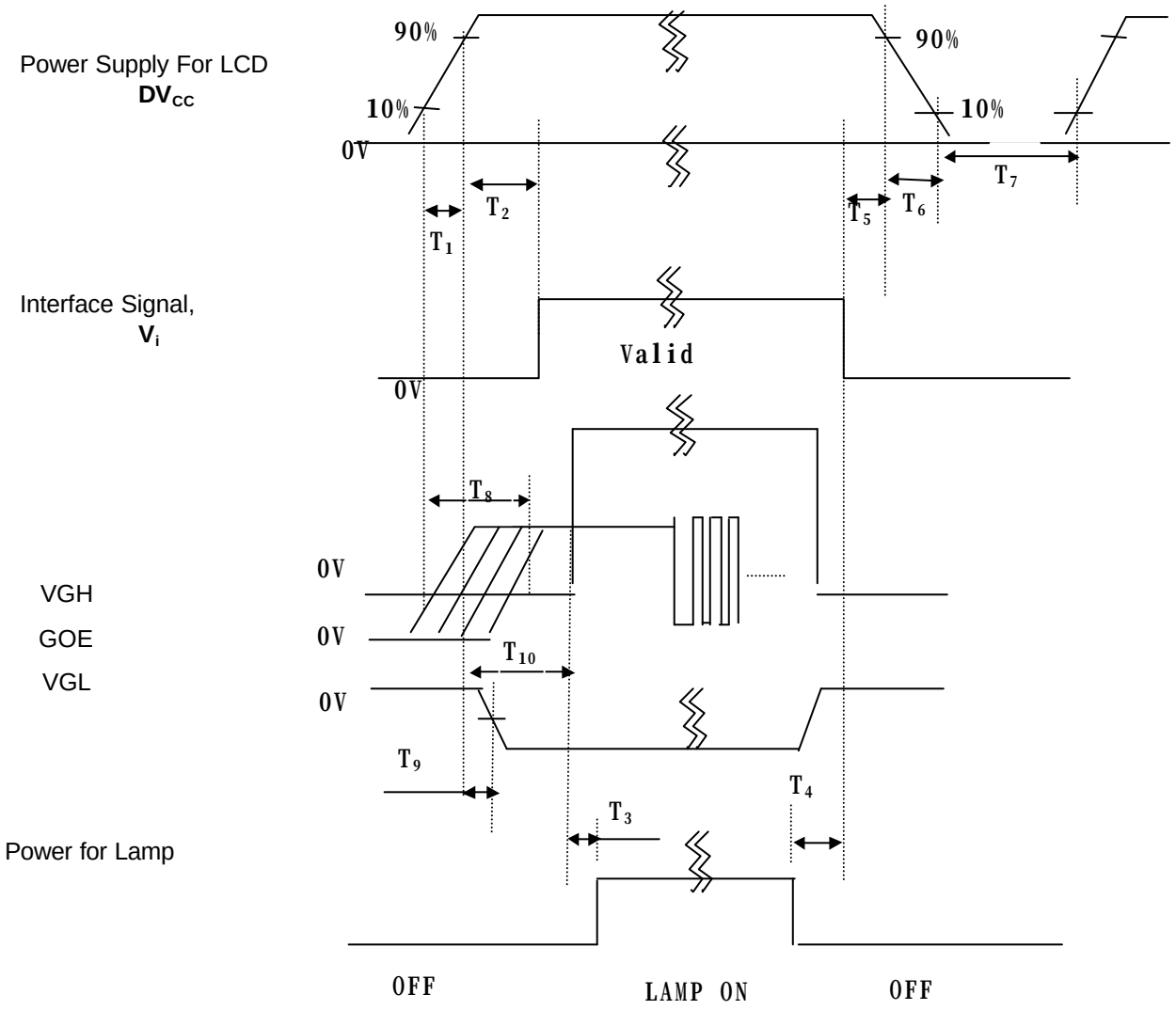

Parameter	Values			Units
	Min.	Typ.	Max.	
T_1	0.5	-	10	ms
T_2	10	-	50	ms
T_3	200	-	-	ms
T_4	200	-	-	ms
T_5	0.01	-	50	ms
T_6	-	-	10	ms
T_7	1000	-	-	ms
T_8	0.05	-	T_2	ms
T_9	1	-	$T_2 - 5$	ms
T_{10}	$T_2 + 20$	-	80	ms

Notes: 1. Please avoid floating state of interface signal at invalid period.
2. When the interface signal is invalid, be sure to pull down the power supply for LCD V_{CC} to 0V.
3. Lamp power must be turn on after power supply for LCD and interface signal are valid.

5.Detail information about first GOE MASKING AND other sequence for power stablization.

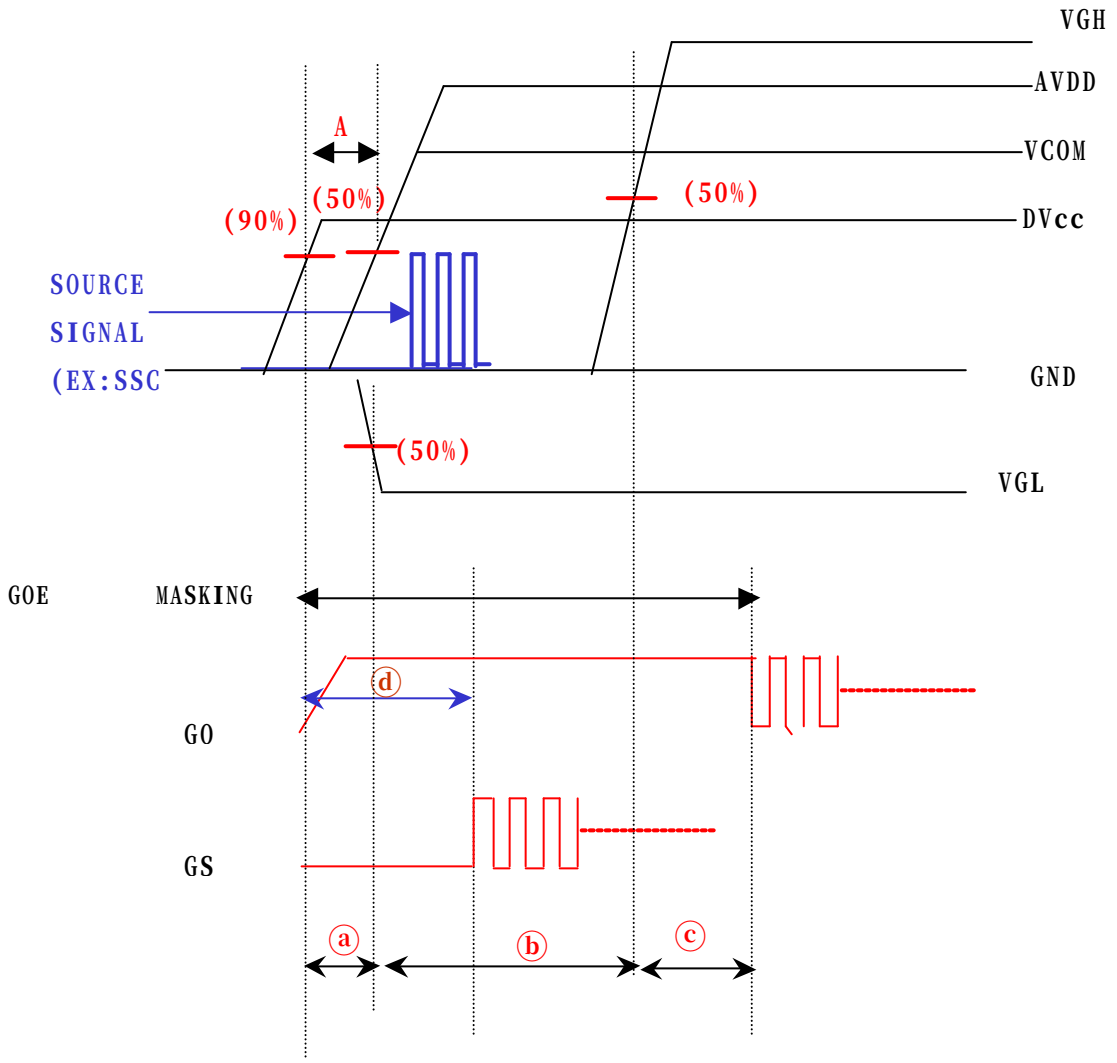

ITEM	Description	min	typ	max	unit
ⓐ	DVCC 90% ~ VGL 50%	1		T2-10	msec
ⓑ	VGL 50% ~ VGH 50%	30	-	80-A	msec
ⓒ	VGH 50% ~ GOE Mask Falling	17	-	40	msec
ⓓ	DVCC 90% ~GSC	T9+5	-	50	msec

A	DVCC 90% ~ AVDD 50%	0.5	-	T9+20	msec

4. Optical Specifications

Optical characteristics are determined after the unit has been ‘ON’ and stable for approximately 30 minutes in a dark environment at 25℃. The values specified are at an approximate distance 50cm from the LCD surface at a viewing angle of ? and ? equal to 0?.

Table 8 OPTICAL CHARACTERISTICS (Ta=25℃, Vcc=3.3V, f_{GSP}=60Hz, SSP=32.5MHz, I_{BL}=8mA)

Parameter	Symbol	Values			Units	Notes
		Min.	Typ.	Max.		
Contrast Ratio	CR	200	300	-		1
Surface Luminance, white	L_{WH}	200	250	-	cd/m^2	2
Luminance Variation	δ_{WHITE}	70	85		%	3
Luminance Uniformity -angular-dependent(TCO '99)	LR	-	-	1.7		4
Response Time	Tr					5
Rise Time	Tr_R	-	10	15	ms	
Decay Time	Tr_D	-	20	30		
CIE Color Coordinates						
Red	x_R	0.596	0.626	0.656		
	y_R	0.317	0.347	0.377		
Green	x_G	0.278	0.308	0.338		
	y_G	0.558	0.588	0.618		
Blue	x_B	0.116	0.146	0.176		
	y_B	0.089	0.119	0.149		
White	x_W	0.283	0.313	0.343		
	y_W	0.299	0.329	0.359		
Viewing Angle(C/R>10)					degree	6
x axis, right (Φ=0º)	θr	55	60	-		
x axis, left(Φ=180º)	θl	55	60	-		
y axis, up(Φ=90º)	θu	40	45	-		
y axis, down (Φ=270º)	θd	40	45	-		
Viewing Angle(C/R>5)						
x axis, right (Φ=0º)	θr	70	75	-		
x axis, left(Φ=180º)	θl	70	75	-		
y axis, up(Φ=90º)	θu	50	55	-		
y axis, down (Φ=270º)	θd	55	60	-		
Gray Scale		-	-	-		7

FIG. 1 Optical Characteristic Measurement Equipment and Method

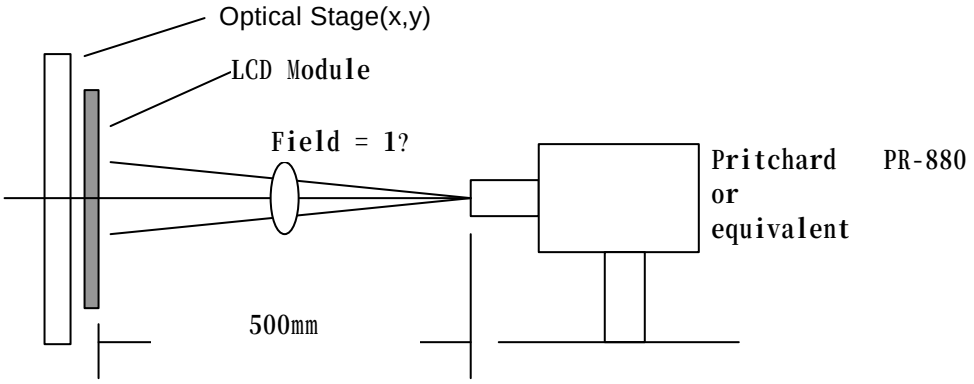

Notes 1. Contrast Ratio (CR) is defined mathematically as:

$$\frac{\text{(Surface Luminance with all white pixels)}}{\text{(Surface Luminance with all black pixels)}}$$

Contrast ratio shall be measured at the center of the display (Location 5).
For more information see FIG. 2.

2. Surface luminance is the center point across the LCD surface 50cm from the surface with all pixels displaying white.

3. The variation in surface Luminances, Lsv is defined as :

$$\frac{\text{Minimum } (B_1, B_2, \ldots B_9)}{\text{Maximum } (B_1, B_2, \ldots B_9)} \quad ? \ 100(\%)$$

Where B1 to B9 are the Luminance with all pixels displaying white at 9 locations.

FIG. 2 Luminance Variation

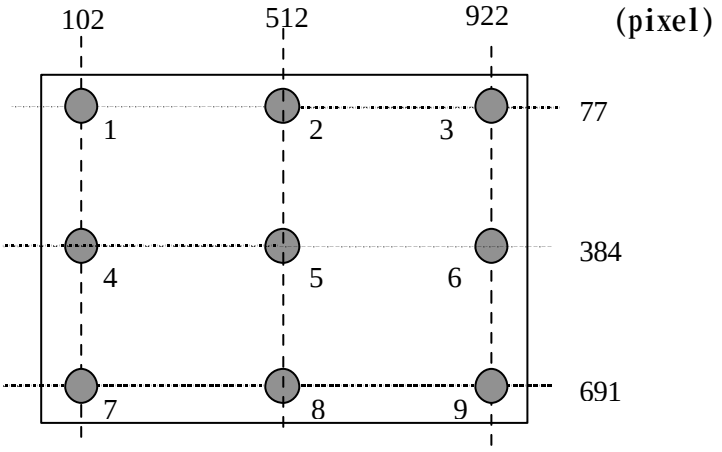

4 Luminance Uniformity – angular – dependent (L_R) : TCO '99

TCO ' 99 Certification Requirements and test methods for environmental labelling of Display [Flat]report No.2 (X1.5.2 B Luminance Uniformity – angular - dependent)

- Measure Point : 2-Point
- Measure Distance : D (Diagonal)×1.5
- Method : Measure the Luminance at the Point R & L with +30deg. -30deg

$$L_R = ((L_{max,+30deg.} / L_{min,+30deg.}) + (L_{max,-30deg.} / L_{min,-30deg.})) / 2$$

FIG. 3 TCO 99

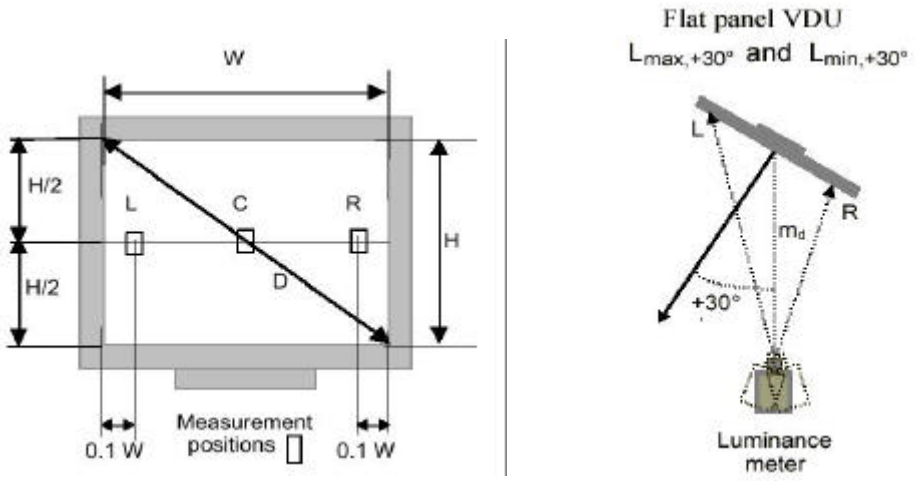

5. The response time is defined as the following figure and shall be measured by switching the input signal for "black" and "white".

FIG. 4 Response Time

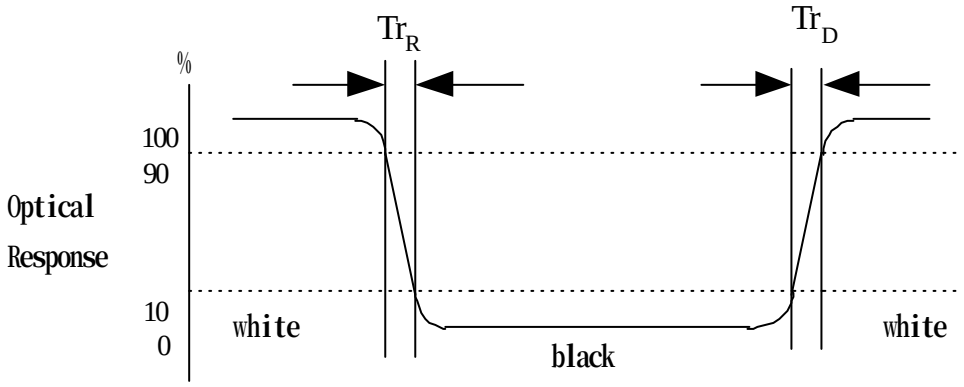

6. Viewing angle is the angle at which the contrast ratio is greater than 10. The angles are determined for the horizontal or x axis and the vertical or y axis with respect to the z axis which is normal to the LCD surface.

FIG. 5 Viewing angle

<Definition of viewing angle range>

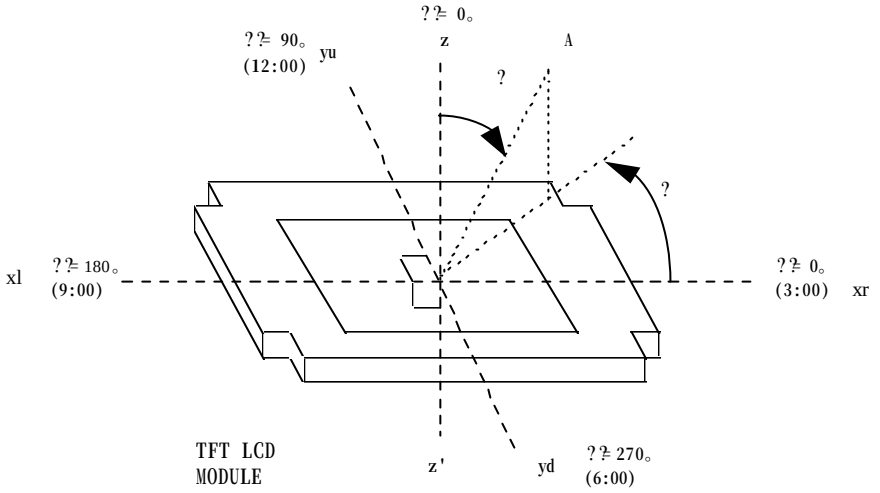

7. Gray scale specification.

No.	Gray	Relative Brightness (%)	Notes
		Typ.	
1	0	0.26	-
2	3	0.38	
3	7	0.83	
4	11	2.04	
5	15	4.06	
6	19	7.10	
7	23	10.9	
8	27	15.8	
9	31	21.3	
10	35	27.9	
11	39	35.7	
12	43	44.6	
13	47	54.7	
14	51	65.6	
15	55	78.6	
16	59	89.5	
17	63	100	

5. Mechanical Characteristics

The contents provide general mechanical characteristics for the model LS150X03-A3. In addition, the figures in the next page are detailed mechanical drawings of the LCD.

Outside dimensions :

	Horizontal	326.0 ±0.5 mm
	Vertical	254.0 ±0.5 mm
	Depth	11.5 ± 0.5 mm
Bezel area :		
	Horizontal	308.2 mm
	Vertical	232.1 mm
Active Display area :		
	Horizontal	304.128 mm
	Vertical	228.096 mm

Weight (approximate) : 1100 g (typ), 1150 g(max).

Surface Treatment : Hard coating 3H.
Anti-glare treatment of the front polarizer.

< FRONT VIEW >

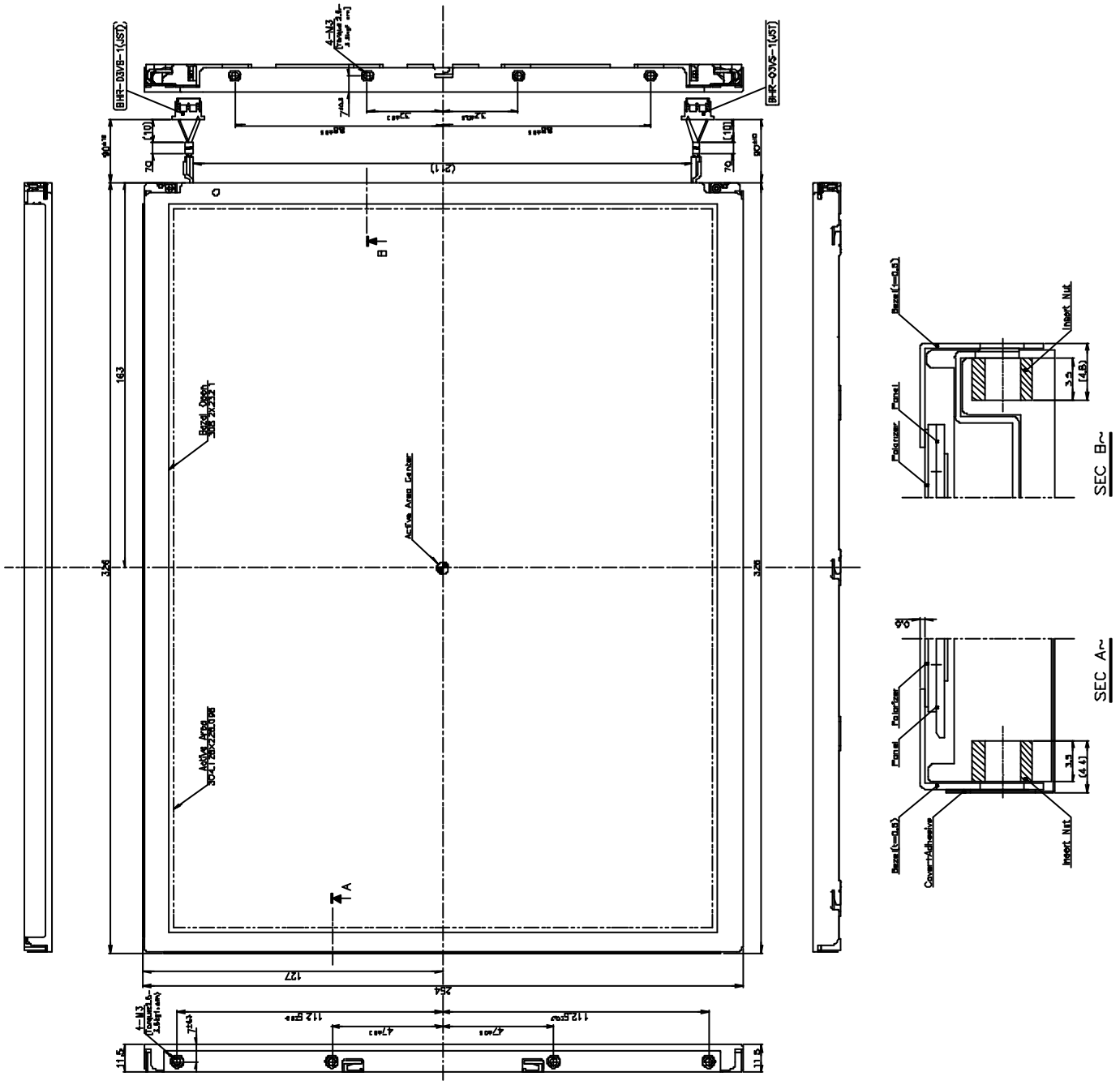
BHR-03VB-1(JST)
BHR-03VS-1(JST)
4-M3
Active Area Center
Bezel Open
Active Area
Insert Nut
Panel
Polarizer
Cover+Adhesive
SEC B~
SEC A~
163
326
127
254
11.5

< REAR VIEW >

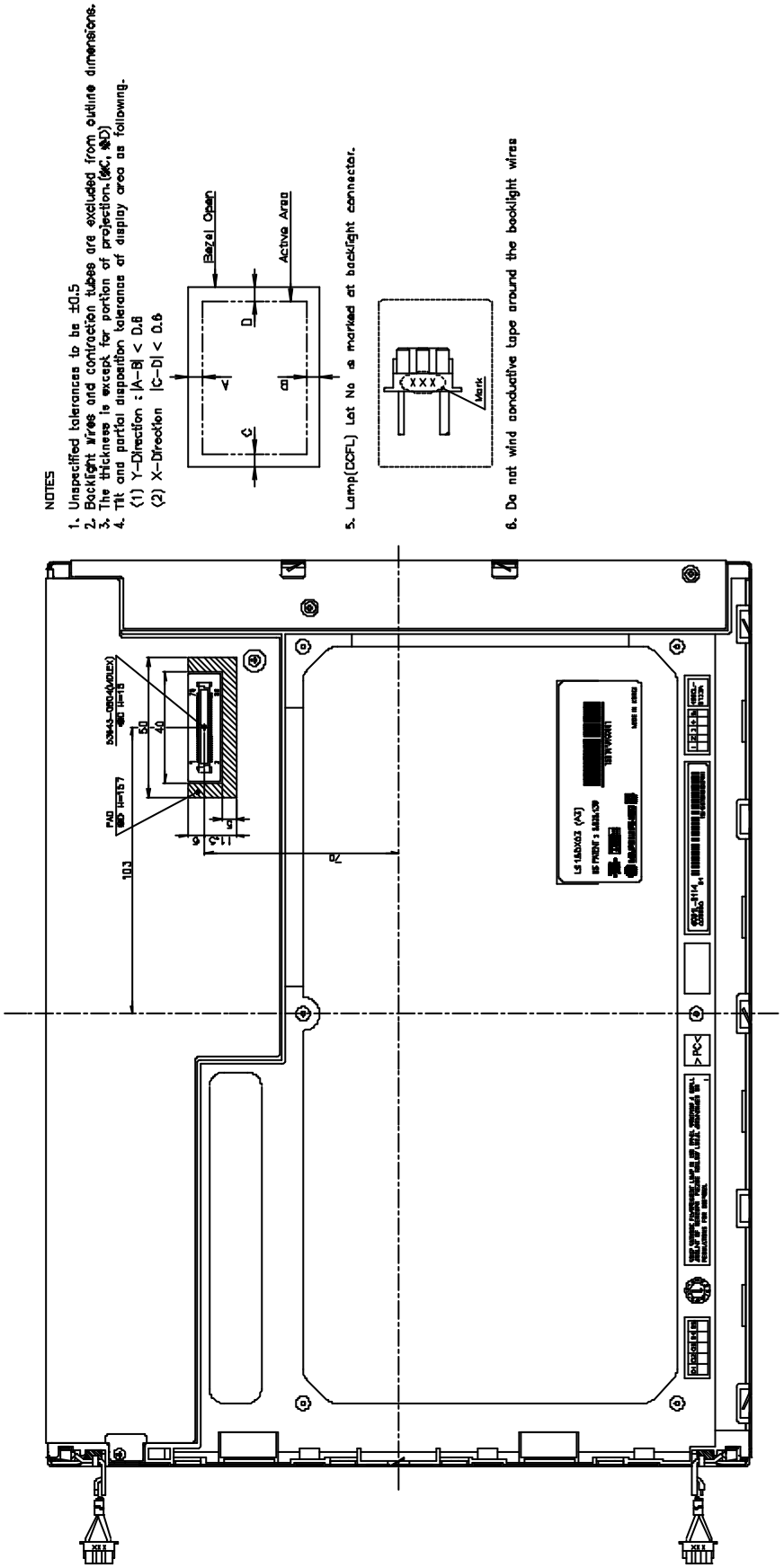
NOTES
1. Unspecified tolerances to be ±0.5
2. Backlight wires and contraction tubes are excluded from outline dimensions.
3. The thickness is except for portion of projection.(※C, ※D)
4. Tilt and partial disposition tolerance of display area as following.
(1) Y-Direction : |A-B| < 0.8
(2) X-Direction |C-D| < 0.6
Bezel Open
Active Area
5. Lamp(CCFL) Lot No is marked at backlight connector.
Mark
6. Do not wind conductive tape around the backlight wires
PAD
103
70
50
40

6. Reliablity

- Environment test condition

No.	Test Item	Conditions
1	High temperature storage test	Ta = 60℃ 240h
2	Low temperature storage test	Ta = -20℃ 240h
3	High temperature operation test	Ta = 50℃ 50%RH 240h
4	Low temperature operation test	Ta = 0℃ 240h
5	Vibration test (non-operating)	Wave form:random Vibration level:1.0G RMS Bandwidth:10-500Hz Duration:X,Y,Z, 20 min One time each direction
6	Shock test (non-operating)	Shock level:120G Waveform:half sine wave, 2ms Direction: ±X, ±Y, ±Z One time each direction
7	Altitude operating storage/shipment	 0 - 10,000 feet (3048m) 0 - 40,000 feet (12192m)

{Result Evaluation Criteria}

There should be no change which might affect the practical display function when the display quality test is conducted under normal operating condition.

7. International Standards

7-1. Safety

a) UL 1950 Third Edition, Underwriters Laboratories, Inc. Jan. 28, 1995.
Standard for Safety of Information Technology Equipment Including Electrical Business Equipment.

b) CAN/CSA C22.2 No. 950-95 Third Edition, Canadian Standards Association, Jan. 28, 1995.
Standard for Safety of Information Technology Equipment Including Electrical Business Equipment.

c) EN 60950 : 1992 + A1 : 1993 + A2 : 1993 + A3 : 1995 + A4 : 1997 + A11 : 1997
IEC 950 : 1991 + A1 : 1992 + A2 : 1993 + A3 : 1995 + A4 : 1996
European Committee for Electrotechnical Standardization (CENELEC)
EUROPEAN STANDARD for Safety of Information Technology Equipment Including Electrical Business Equipment.

7-2. EMC

a) ANSI C63.4 "Methods of Measurement of Radio-Noise Emissions from Low-Voltage Electrical and Electronic Equipment in the Range of 9kHz to 40GHz." American National Standards Institute(ANSI),1992.

b) C.I.S.P.R "Limits and Methods of Measurement of Radio Interference Characteristics of Information Technology Equipment." International Special Committee on Radio Interference

c) EN 55022 "Limits and Methods of Measurement of Radio Interference Characteristics of Information Technology Equipment." European Committee for Electrotechnical Standardization (CENELEC),1988

8. Packing

8-1. Designation of Lot Mark

a) Lot Mark

A	B	C	D	E	F	G	H	I	J	K	L	M

A, B, C : Inch CODE
D:YEAR
E : MONTH
F,G : Panel Code
H: Assemblely Code
I, J, K, L,M : SERIAL NO.

Note : 1. YEAR(D)

YEAR	98	99	2000	2001	2002	2003	2004	2005	2006	2007	2008
Mark	8	9	0	1	2	3	4	5	6	7	8

2. MONTH(E)

MONTH	Jan.	Feb.	Mar.	Apr.	May	Jun.	Jun.	Aug.	Sep.	Oct.	Nov.	Dec.
Mark	1	2	3	4	5	6	7	8	9	A	B	C

3. Serial No.

Serial No.	1 ~ 99999	100000 ~
Mark	00001 ~ 99999	A0001 ~ A9999, ·····, Z9999

b) Location of Lot Mark

Serial NO. Is printed on the label. The label is attached to the backside of the LCD module.
This is subject to change without prior notice.

8-2. Packing Form

a) Package quantity in one box : 8

b) Box Size : 338 X 309 X 401

9.PRECAUTIONS

Please pay attention to the followings when you use this TFT LCD module.

9.1 MOUNTING PRECAUTIONS

(1) You must mount a module using holes arranged in four corners or four sides.
(2) You should consider the mounting structure so that uneven force (ex. twisted stress) is not applied to the module.
And the case on which a module is mounted should have sufficient strength so that external force is not transmitted directly to the module.
(3) Please attach a transparent protective plate to the surface in order to protect the polarizer.
Transparent protective plate should have sufficient strength in order to resist external force.
(4) You should adopt radiation structure to satisfy the temperature specification.
(5) Acetic acid type and chlorine type materials for the cover case are not desirable because the former 0 generates corrosive gas of attacking the polalizer at high temperature and the latter causes circuit break by electro-chemical reaction.
(6) Do not touch, push or rub the exposed polarizers with glass, tweezers or anything harder than HB pencil lead. And Please do not rub with dust clothes with chemical treatment.
Do not touch the surface of polarizer for bare hand or greasy cloth. (Some cosmetics are detrimental to the polarizer.)
(7) When the surface becomes dusty, please wipe gently with absorbent cotton or other soft materials like chamois soaked with petrolium benzene. Normal-hexane is recommended for cleaning the adhesives used to attach front / rear polarizers. Do not use acetone, toluen and alcohol because they cause chemical damage to the polarizer.
(8) Wipe off saliva or water drops as soon as possible. Their long time contact with polarizer causes deformations and color fading.
(9) Do not open the case because inside circuits do not have sufficient strength.

9.2 OPERATING PRECAUTIONS

(1) The spike noise causes the mis-operation of circuits. It should be lower than following voltage :
V = ? 200mV (Over and under shoot voltage).
(2) Response time depends on the temperature. (In lower temperature, it becomes longer.)
(3) Brightness depends on the temperature. (In lower temperature, it becomes lower.)
And in lower temperature, response time (required time that brightness is stable after turned on) becomes longer.
(4) Be careful for condensation at sudden temperature change. Condensation makes damage to polarizer or electrical contacted parts. And after fading condensation, smear or spot will occur.
(5) When fixed patterns are displayed for a long time, remnant image is likely to occur.
(6) A module has high frequency circuit. If you need to shield the electromagnetic noise, please do in yours. When a Back-light unit is operating, it sounds. If you need to shield the noise, please do in yours.

9.3 ELECTROSTATIC DISCHARGE CONTROL

Since a module is composed of electronic circuits, it is not strong to electrostatic discharge. Make certain that treatment persons are connected to ground through wrist band etc . And don' t touch interface pin directly.

9.4 PRECAUTIONS FOR STRONG LIGHT EXPOSURE

Strong light exposure causes degradation of polarizer and color filter.

9.5 STORAGE

When storing modules as spares for a long time, the following precautions are necessary.

(1) Store them in a dark place. Do not expose the module to sunlight or fluorescent light. Keep the temperature between 5℃ and 35℃ at normal humidity.

(2) The polarizer surface should not come in contact with any other object.
It is recommended that they be stored in the container in which they were shipped.

9.6 HANDLING PRECAUTIONS FOR PROTECTION FILM

(1) The protection film is attached to the bezel with a small masking tape.
When the protection film is peeled off, static electricity is generated between the film and polarizer.
This should be peeled off slowly and carefully by people who are electrically grounded and with well ion-blown equipment or in such a condition, etc.

(2) When the module with protection film attached is stored for a long time, sometimes there remains a very small amount of glue still on the Bezel after the protection film is peeled off.

(3) You can remove the glue easily. When the glue remains on the Bezel or its vestige is recognized, please wipe them off with absorbent cotton waste or other soft material like chamois soaked with normal-hexane.