NEC

TFT COLOR LCD MODULE
NL10276AC24-05

31cm (12.1 type), 1024 × 768 pixels, Full color
Vertical screen expansion (Multi-scan), Incorporated backlight with inverter

DESCRIPTION

NL10276AC24-05 is a TFT (thin film transistor) active matrix color liquid crystal display (LCD) comprising amorphous silicon TFT attached to each signal electrode, a driving circuit and a backlight. NL10276AC24-05 has a built-in backlight/inverter.

The 31cm diagonal display area contains 1024×768 pixels and can display full-color (more than 16 million colors) simultaneously by analog RGB signals of XGA, SVGA, VGA, VGA-TEXT, PC-9801, NTSC, and PAL.

NL10276AC24-05 is a succeeding model for NL10276AC24-02, and it has two additional operating modes of NTSC and PAL.

FEATURES

- ○ Analog RGB interface
- ○ Vertical screen expansion (Multi-scan)~XGA, SVGA, VGA, VGA-TEXT, PC-9801, NTSC, PAL.
- ○ High luminous / Low reflection
- ○ Incorporated edge-light type backlight with inverter.

APPLICATIONS

- ○ Engineering workstation (EWS), Personal computer (PC), Word processor
- ○ Display terminals for control system
- ○ New media
- ○ Monitors for process controller

The information in this document is subject to change without notice.

Document No. EN0208EJ2V0DS00
Date Published April 1997 M
Printed in Japan

© NEC Corporation 1996

STRUCTURE AND FUNCTIONS

A TFT color LCD module comprises a TFT LCD panel, LSIs for driving liquid crystal, and a backlight. The TFT LCD panel is composed of a TFT array glass substrate superimposed on a color filter glass substrate with liquid crystal filled in the narrow gap between two substrates. The backlight apparatus is located on the backside of the LCD panel.

RGB (Red, Green, Blue) data signals are sent to LCD panel drivers after modulation into suitable forms for active matrix addressing through signal processor.

Each of the liquid crystal cells acts as an electro-optical switch that controls the light transmission from the backlight by a signal applied to a signal electrode through the TFT switch.

BLOCK DIAGRAM

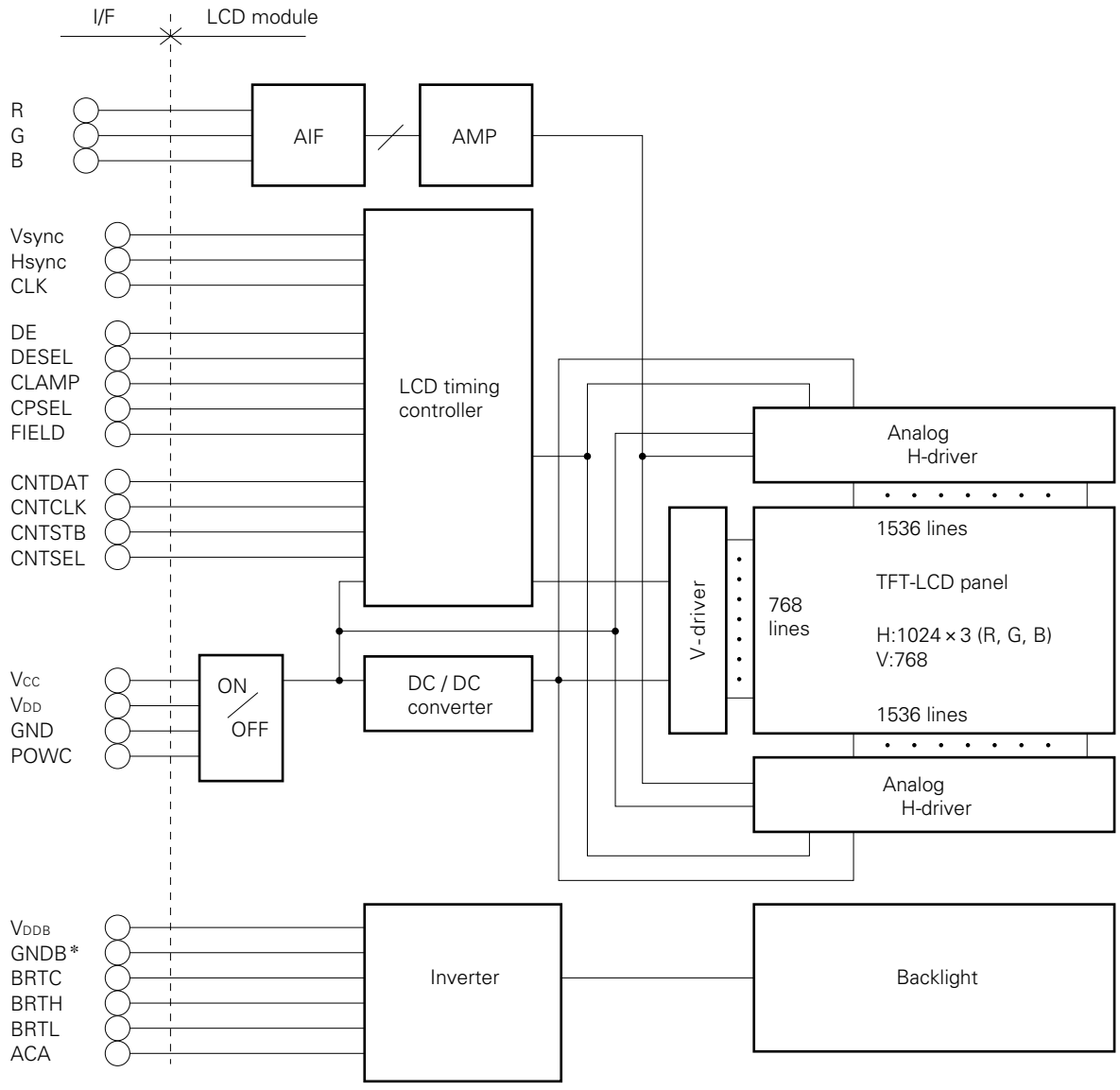

*1 : GNDB is connected to the module frame ground.

OUTLINE OF CHARACTERISTICS (at room temperature)

Display area	245.76 (H) × 184.32 (V)mm
Drive system	a-Si TFT active matrix
Display colors	Full-color
Number of pixels	1024 × 768
Pixel arrangement	RGB vertical stripe
Pixel pitch	0.24 (H) × 0.24 (V)mm
Module size	290 (H) × 225.0 (V) × 17.0 max. (D)mm
Weight	970 g (typ.)
Contrast ratio	150:1 (typ.)

Viewing angle (more than the contrast ratio of 10:1)

- Horizontal: 50° (typ. left side, right side)
- Vertical : 20° (typ. upper side), 20° (typ. lower side)

Designed viewing direction

- Wider viewing angle with contrast ratio : Down side (6 o'clock)
- Wider viewing angle without image reversal : Up side (12 o'clock)
- Optimum grayscale (γ = 2.2) : Perpendicular

Color gamut	40% (min., At center, To NTSC)
Response time	40 ms (max.), "white" to "black"
Luminance	200 cd/m^2 (typ.)
Signal system	Analog RGB signals, Synchronous signals (Hsync, Vsync), Dot clock
Supply voltage	3.3 V, 12 V, 12 V
Backlight	Edge light type, Two cold cathode fluorescent lamps with inverter
Power consumption	14.4 W (typ.)

GENERAL SPECIFICATIONS

Item	Specifications	Unit
Module size	290.0 ± 0.5(H) × 225.0 ± 0.5(V) × 17.0 max. (D)	mm
Display area	245.76(H) × 184.32 (V)	mm
Number of pixels	1024(H) × 768 (V)	pixel
Dot pitch	0.08(H) × 0.24 (V)	mm
Pixel pitch	0.24(H) × 0.24 (V)	mm
Pixel arrangement	RGB(Red, Green, Blue) vertical stripe	–
Display colors	Full-color	color
Weight	1000 (max.)	g

note : A variable resistor for the luminance control is extra.

ABSOLUTE MAXIMUM RATINGS

Parameter	Symbol	Ratings	Unit	Remarks	
Supply voltage	V_{CC}	–0.3 to +4.6	V	Ta = 25˚C	
	V_{DD}	–0.3 to +14	V		
	V_{DDB}	–0.3 to +14	V		
Logic input voltage	VIN1	–0.3 to +5.5	V		
R, G, B input voltage	VIN2	–4.0 to +4.0	V		
CLK input voltage	VIN3	–7.0 to +7.0	V		
Storage temp.	Tst	–20 to +60	˚C	–	
Operating temp.	Top	0 to +50	˚C	Module surface *	
Humidity		≦ 95% relative humidity		Ta ≦ 40˚C	no condensation
		≦ 85% relative humidity		40˚C<Ta≦50˚C	
		Absolute humidity shall not exceed Ta = 50˚C, 85% relative humidity level.		Ta > 50˚C	

* Measured at the display area

ELECTRICAL CHARACTERISTICS

(1) Logic/LCD driving/Backlight Ta = 25˚C

Parameter	Symbol	min.	typ.	max.	Unit	Remarks
Supply voltage	V_{CC}	3.0	3.3	3.6	V	for logic
	V_{DD}	11.4	12.0	12.6	V	for LCD driving
	V_{DDB}	11.4	12.0	12.6	V	for backlight
Logic input "L" voltage	V_{IL}	0	–	0.8	V	TTL level Vcc=3.3 V
Logic input "H" voltage	V_{IH}	2.2	–	5.25	V	
Logic input "L" current 1	I_{IL1}	–1080	–	–	μA	for CNTSEL, CPSEL and POWC terminals
Logic input "H" current 1	I_{IH1}	–	–	10	μA	
Logic input "L" current 2	I_{IL2}	–670	–	–	μA	for BRTC terminal
Logic input "H" current 2	I_{IH2}	–	–	80	μA	
Logic input "L" current 3	I_{IL3}	–90	–	–	μA	for ACA terminal
Logic input "H" current 3	I_{IH3}	–	–	0	μA	
Logic input "L" current 4	I_{IL4}	–10	–	–	μA	except the above logic input terminals
Logic input "H" current 4	I_{IH4}	–	–	130	μA	
CLK input voltage	V_{ICLK}	0.4 *1	–	1.0	Vp-p	for CLK
CLK DC input level	V_{Idc}-CLK	–4.5	–	+4.5	V	
Supply current	I_{DDB}	–	710	800	mA	V_{DDB} = 12 V *2
	I_{DD}	–	480	700	mA	V_{DD} = 12 V *2
	I_{CC}	–	120	200	mA	V_{CC} = 3.3 V *2

*1 : Ta = 0 to 50˚C : V_{ICLK} = 0.6 V_{p-p} (MIN.).
Ta = 25˚C : V_{ICLK} = 0.4 V_{p-p} (MIN.).
*2 : dot-checkered pattern

CLK input equivalent circuit

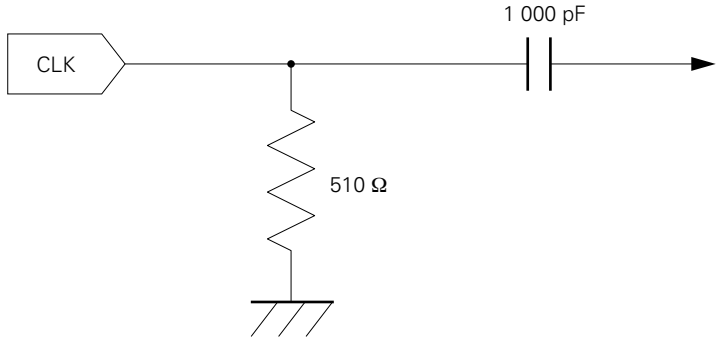

(2) Input video signals (R, G, B) Ta = 25˚C

Parameter	Symbol	min.	typ.	max.	Unit	Remarks
Video input voltages	V_{IRGB}	0 (black)	–	0.7 (White)	Vp-p	for RGB Zi = 75 Ω
Video input limits	V_{Idc}-RGB	–2.5	–	+2.5	V	

SUPPLY VOLTAGE SEQUENCE

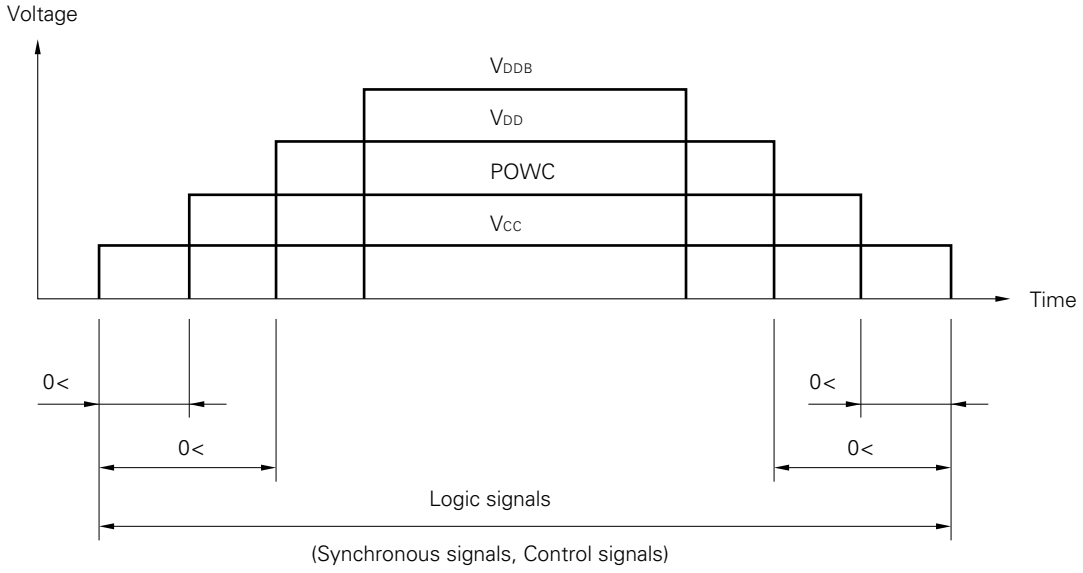

CAUTION

Wrong power sequence may damage to the module.

(1) Logic signals (synchronous signals and control signals) should be "0" voltage (V), when V_{CC} is not input. If higher than 0.3 V is input to signal lines, the internal circuit will be damaged.

(2) LCD module will shut down the power supply of driving voltage to LCD panel internally, when one of CLK, Hsync, Vsync, DE (at DE mode) is not input more than 90 ms typically. During this period, the display data are unstable. But the backlight works correctly even this period, and the backlight can be controlled by BRTC signal.

(3) The ON/OFF switching of backlight should operate while logic signals are supplied.
If the backlight power supply (V_{DDB}) is turned ON / OFF without logic signals, unstable data will be displayed.

(4) Keep POWC signal "L" more than 200 ms after the power supply (V_{CC}) is input, if POWC signal is controlled. (refer to PIN FUNCTION)

(5) Analog RGB inputs are independent from this power supply sequence.

(6) It is better for the timing between logic signals and V_{CC} as follows.

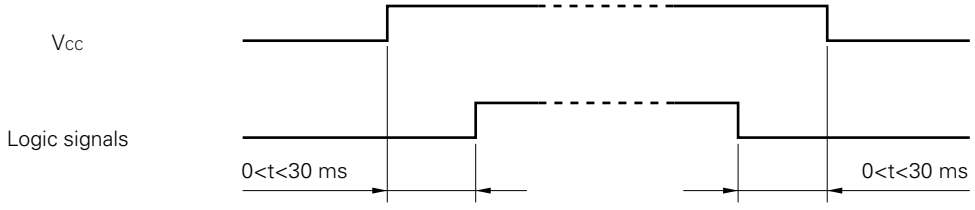

INTERFACE PIN CONNECTION

(1) Connector 1

CN1 : MRF03-6R-SMT (coaxial type)
Adaptable socket : MRF03-2×6P-1.27 (For cable type) or
MRF03-6PR-SMT (For board to board type)
Supplier : HIROSE ELECTRIC CO., LTD.

Coaxial cable : UL20537PF75VLAS
Supplier : HITACHI CO., LTD.
note : A coaxial cable shield should be connected with GND.

Pin No.	Symbol	Pin No.	Symbol
1	CLK	4	R
2	Hsync	5	G
3	Vsync	6	B

<Figure from socket view>

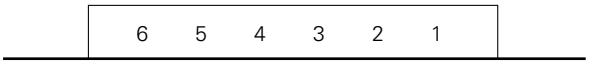

(2) Connector 2

CN2 : IL-Z-12PL1-SMTY
Adaptable socket : IL-Z-12S-S125C3
Supplier : Japan Aviation Electronics Industry Limited (JAE)

Pin No.	Symbol	Pin No.	Symbol
1	V_{DD}	7	V_{CC}
2	V_{DD}	8	V_{CC}
3	GND	9	DESEL
4	GND	10	GND
5	POWC	11	GND
6	GND	12	DE

<Figure from socket view>

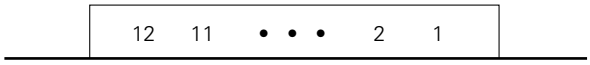

(3) Connector 3

CN3 : IL-Z-11PL1-SMTY
Adaptable socket : IL-Z-11S-S125C3
Supplier : Japan Aviation Electronics Industry Limited (JAE)

Pin No.	Symbol	Pin No.	Symbol
1	V_{DDB}	7	ACA
2	V_{DDB}	8	BRTC
3	V_{DDB}	9	BRTH
4	GNDB	10	BRTL
5	GNDB	11	N.C.
6	GNDB		

<Figure from socket view>

note : N.C. (No Connection) should be open.

(4) Connector 4

CN4 : IL-Z-13PL1-SMTY

Adaptable socket : IL-Z-13S-S125C3

Supplier : Japan Aviation Electronics Industry Limited (JAE)

Pin No.	Symbol	Pin No.	Symbol
1	GND	8	CLAMP
2	CNTSEL	9	GND
3	CNTDAT	10	FIELD
4	CNTSTB	11	GND
5	GND	12	N.C.
6	CNTCLK	13	GND
7	CPSEL		

note : N.C. (No Connection) should be open.

<Figure from socket view>

<Connector location: Rear view>

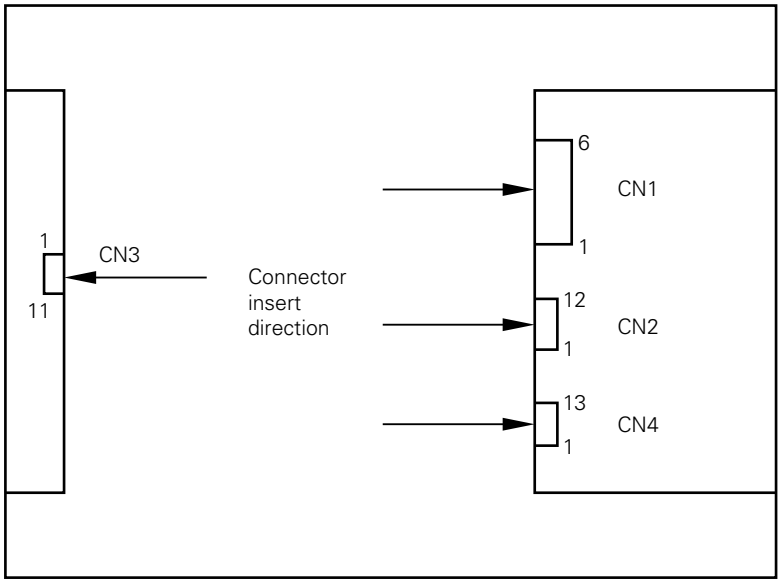

PIN FUNCTION

Symbol	Logic	Description
CLK	Positive	Dot clock input, timing signal for display data
Hsync	Negative	Horizontal synchronous signal input (TTL level)
Vsync	Negative	Vertical synchronous signal input (TTL level)
DE	Positive	Data enable signal input (TTL level) Back-porch becomes free, when DESEL is "H". Back-porch becomes fix, when DESEL is "L". (DE should be fixed "H" or "L".)
R	–	Red video signal input (0.7 Vp-p, 75 Ω)
G	–	Green video signal input (0.7 Vp-p, 75 Ω)
B	–	Blue video signal input (0.7 Vp-p, 75 Ω)
CLAMP	–	Clamp timing signal of black level (TTL level) Valid for only CPSEL is "L".
CNTSEL	–	Display control signal in case of serial communication. (TTL level) H or open : Default L : External control
CNTDAT	Positive	Display control data (serial data) (TTL level)
CNTCLK	Positive	CLK for display control data (TTL level)
CNTSTB	Positive	Latch pulse for display control data (TTL level)
DESEL	Positive	DE function select signal (TTL level) H : DE mode L or open : Fixed mode
CPSEL	–	Clamp signal function select signal (TTL level) H or open : Default L : CLAMP signal is possible
FIELD	–	Field select signal (valid for only NTSC/PAL-mode) (TTL level) 1st field is "H". 2nd field is "L". Field terminal is possible to use "OPEN" in case of except NTSC/ PAL-mode.
POWC	Positive	Power control signal (TTL level) H or open : Logic, LCD power is on L : Logic, LCD power is off (*1)
BRTH/BRTL	–	Pins for backlight brightness control Connect 10 kW variable resistor (*2) or voltage control (*3).
BRTC	Positive	Backlight ON/OFF control signal H or open : Backlight on L : Backlight off
ACA	Positive	Luminance control signal H or open : Normal luminance L : Low luminance (1/2 of normal luminance)
V_{CC}	–	V_{CC} (+3.3 V) power supply for logic
V_{DD}	–	V_{DD} (+12 V ± 5%) power supply for LCD
V_{DDB}	–	V_{DDB} (+12 V ± 5%) power supply for backlight
GNDB		Ground for backlight (V_{DDB}) GNDB is connected to the module frame ground.
GND	–	Signal ground for logic / LCD driving (V_{CC}, V_{DD}) (Connect to a system ground.)

*1 : When POWC is "L" logic input signal should be all "0 V". If input signals are more than "0.3 V", inside circuits of the LCD module may be broken.
When POWC is "L", serial communication data is clear. Please set it again.

*2 : The variable resistor for brightness control should be 10 kΩ type, and zero point of the resistor corresponds to the minimum of luminance.

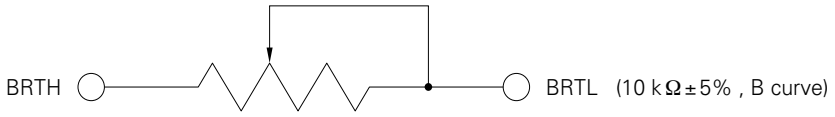

< connection of the variable resistor to pins >

*3 : In case of voltage control for brightness by BRTH/BRTL, at first, set BRTH to be "0 V". And BRTL input voltage can control the brightness. When BRTL input voltage is "1 V" the luminance become maximum. And when its voltage is "0 V", the luminance becomes minimum.

FUNCTIONS

(1) Serial data

This LCD module has following functions by serial data input (Table 1).

No.	FUNCTIONS	DETAIL
1	Expansion mode (Screen mode)	See Table 2 and EXPANSION FUNCTION
2	Display position control (HORIZONTAL)	See Table 6
3	Display position control (VERTICAL)	See Table 3
4	CLK delay control	See Table 4
5	Hsync period count number	See Table 7
6	CLK fall/rise synchronous change	See Table 5
7	Input frequency selection	See Table 8

HOW TO USE THE ABOVE FUNCTIONS

If CNTSEL is "L", the above functions are valid. (CNTSEL is "H" or open, default values are valid.) After serial data are transferred, the data is latched by CNTSTB. Once, the data is latched, the above functions are effective.

Please keep CNTSTB to be "L" during transferring data.

Input data can be changed during power on, but LCD display may be disturbed. When the serial data are changed, we recommend that the backlight power is off using BRTC function.

ATTENTION

Input data can be changed during power on, but LCD display may be disturbed. When the serial data are changed, we recommend that the backlight power is off using BRTC function.

(2) Serial communication timing and waveform

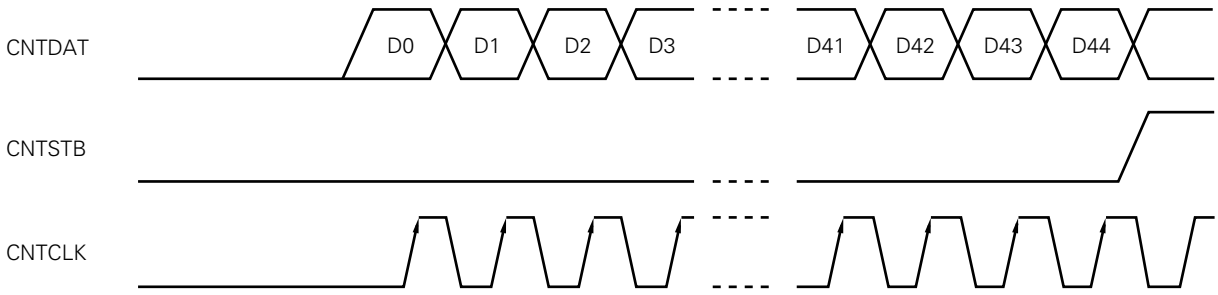

Parameter	Symbol	min.	max.	Unit	Remarks
CLK pulse width	twck	50	–	ns	CNTCLK
CLK frequency	fclk	–	5	MHz	
DATA setup-time	tdst	50	–	ns	CNTDAT
DATA hold-time	tdhl	50	–	ns	
Latch-pulse width	twlp	50	–	ns	CNTSTB
Latch setup-time	tlst	50	–	ns	
Rise / fall time	tr, tf	–	50	ns	CNT × × ×

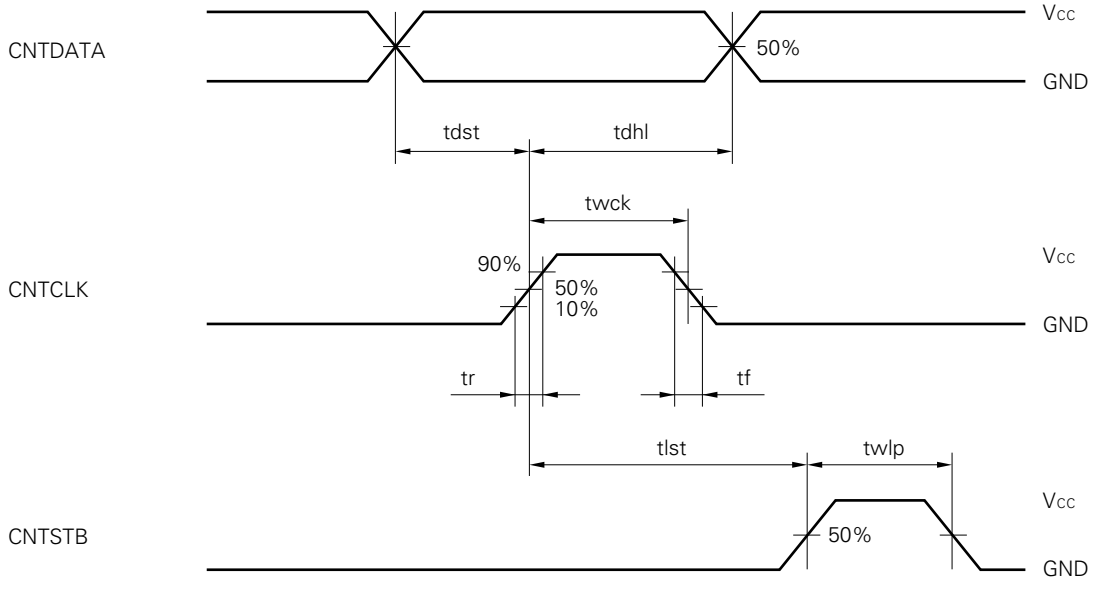

Table 1. CNTDAT COMPOSITION

Data	Data name	Function	
D0	VEX3	Expansion mode	See table 2
D1	VEX2	Expansion mode	
D2	VEX1	Expansion mode	
D3	VEX0	Expansion mode	
D4	VD10	Vertical display position (MSB)	See table 3
D5	VD9	Vertical display position	
D6	VD8	Vertical display position	
D7	VD7	Vertical display position	
D8	VD6	Vertical display position	
D9	VD5	Vertical display position	
D10	VD4	Vertical display position	
D11	VD3	Vertical display position	
D12	VD2	Vertical display position	
D13	VD1	Vertical display position	
D14	VD0	Vertical display position (LSB)	
D15	DELAY6	CLK delay (MSB)	See table 4
D16	DELAY5	CLK delay	
D17	DELAY4	CLK delay	
D18	DELAY3	CLK delay	
D19	DELAY2	CLK delay	
D20	DELAY1	CLK delay	
D21	DELAY0	CLK delay (LSB)	
D22	CKS	CLK reverse signal	See table 5
D23	HD8	Horizontal display position (MSB)	See table 6
D24	HD7	Horizontal display position	
D25	HD6	Horizontal display position	
D26	HD5	Horizontal display position	
D27	HD4	Horizontal display position	
D28	HD3	Horizontal display position	
D29	HD2	Horizontal display position	
D30	HD1	Horizontal display position	
D31	HD0	Horizontal display position (LSB)	
D32	HSE10	Horizontal count number (MSB)	See table 7
D33	HSE9	Horizontal count number	
D34	HSE8	Horizontal count number	
D35	HSE7	Horizontal count number	
D36	HSE6	Horizontal count number	
D37	HSE5	Horizontal count number	
D38	HSE4	Horizontal count number	
D39	HSE3	Horizontal count number	
D40	HSE2	Horizontal count number	
D41	HSE1	Horizontal count number	
D42	HSE0	Horizontal count number (LSB)	
D43	MOD1	CLK frequency select	See table 8
D44	MOD0	CLK frequency select	

MSB : Most Significant Bit
LSB : Least Significant Bit

Table 2. Display mode (VEX3 to VEX0 ; 4 bit)

VEX3	VEX2	VEX1	VEX0	Vertical magnification	Display mode	Display image
0	0	0	0	1	XGA	Standard (note 1)
0	0	0	1	1.25	SVGA	See DISPLAY IMAGE
0	0	1	0	1.6	PC98, VGA, TEXT	
0	0	1	1	–	Prohibit	
0	1	0	1	2.5	PAL	
0	1	1	0	3.2	NTSC	
0	1	1	1	–	Prohibit	
1	X	X	X	–	Prohibit	

note 1 : Display mode is XGA, when CNTSEL is "H" or "open".

Table 3. Vertical position (VD10 to VD0 ; 11 bit)

VD10	VD9	VD8	VD7	VD6	VD5	VD4	VD3	VD2	VD1	VD0	Vertical position [H] (note 2)
0	0	0	0	0	0	0	0	0	0	0	Prohibit
0	0	0	0	0	0	0	0	0	0	1	Prohibit
0	0	0	0	0	0	0	0	0	1	0	Prohibit
0	0	0	0	0	0	0	0	0	1	1	Prohibit
0	0	0	0	0	0	0	0	1	0	0	4
0	0	0	0	0	0	0	0	1	0	1	5
•	•	•	•	•	•	•	•	•	•	•	•
•	•	•	•	•	•	•	•	•	•	•	•
•	•	•	•	•	•	•	•	•	•	•	•
1	1	1	1	1	1	1	1	1	0	1	2045
1	1	1	1	1	1	1	1	1	1	0	2046
1	1	1	1	1	1	1	1	1	1	1	2047 (note 3)

note 2 : This is horizontal line number for effecting VIDEO signal from Vsync-fall.

note 3 : The maximum vertical position is Vsync total.

note 4 : Vertical position is fixed at 35 H, when CNTSEL is "H" or "open".

Table 4. Clock (CLK) delay (DELAY6 to DELAY0 ; 7 bit)

DA (6 : 0) (**note 5**)	Delay value	DA (6 : 0) (**note 5**)	Delay value	DA (6:0) (**note 5**)	Delay value
00H	7.0 ns	2CH	33.3 ns	58H	59.2 ns
01H	7.6 ns	2DH	33.9 ns	59H	59.8 ns
02H	8.2 ns	2EH	34.4 ns	5AH	60.4 ns
03H	8.8 ns	2FH	35.1 ns	5BH	61.1 ns
04H	9.4 ns	30H	35.6 ns	5CH	61.6 ns
05H	10.0 ns	31H	36.2 ns	5DH	62.2 ns
06H	10.5 ns	32H	36.8 ns	5EH	62.7 ns
07H	11.2 ns	33H	37.5 ns	5FH	63.3 ns
08H	11.8 ns	34H	37.9 ns	60H	64.0 ns
09H	12.4 ns	35H	38.5 ns	61H	64.7 ns
0AH	13.0 ns	36H	39.1 ns	62H	65.3 ns
0BH	13.7 ns	37H	39.7 ns	63H	66.0 ns
0CH	14.2 ns	38H	40.4 ns	64H	66.5 ns
0DH	14.8 ns	39H	41.0 ns	65H	67.1 ns
0EH	15.3 ns	3AH	41.5 ns	66H	67.7 ns
0FH	15.9 ns	3BH	42.1 ns	67H	68.3 ns
10H	16.6 ns	3CH	42.6 ns	68H	68.9 ns
11H	17.2 ns	3DH	43.2 ns	69H	69.5 ns
12H	17.8 ns	3EH	43.8 ns	6AH	70.1 ns
13H	18.4 ns	3FH	44.4 ns	6BH	70.7 ns
14H	18.9 ns	40H	45.0 ns	6CH	71.2 ns
15H	19.5 ns	41H	45.6 ns	6DH	71.9 ns
16H	20.1 ns	42H	46.2 ns	6EH	72.4 ns
17H	20.7 ns	43H	46.8 ns	6FH	73.1 ns
18H	21.4 ns	44H	47.3 ns	70H	73.6 ns
19H	22.0 ns	45H	47.8 ns	71H	74.2 ns
1AH	22.6 ns	46H	48.4 ns	72H	74.8 ns
1BH	23.2 ns	47H	49.0 ns	73H	75.4 ns
1CH	23.8 ns	48H	49.6 ns	74H	75.9 ns
1DH	24.4 ns	49H	50.2 ns	75H	76.5 ns
1EH	24.9 ns	4AH	50.8 ns	76H	77.0 ns
1FH	25.6 ns	4BH	51.4 ns	77H	77.7 ns
20H	26.3 ns	4CH	51.9 ns	78H	78.3 ns
21H	26.9 ns	4DH	52.6 ns	79H	79.0 ns
22H	27.4 ns	4EH	53.1 ns	7AH	79.6 ns
23H	28.1 ns	4FH	53.7 ns	7BH	80.2 ns
24H	28.5 ns	50H	54.5 ns	7CH	80.8 ns
25H	29.1 ns	51H	55.0 ns	7DH	81.4 ns
26H	29.7 ns	52H	55.6 ns	7EH	81.9 ns
27H	30.3 ns	53H	56.3 ns	7FH	82.5 ns
28H	31.0 ns	54H	56.8 ns		
29H	31.6 ns	55H	57.4 ns		
2AH	32.2 ns	56H	57.9 ns		
2BH	32.8 ns	57H	58.5 ns		

note 5 : DA (6:0) means Delay 6 (D15) to 0 (D21)

<EXAMPLE>

DA (6:0)=00H

↓

D15	16	17	18	19	20	21
0	0	0	0	0	0	0

DA (6 : 0) = 2AH

↓

D15	16	17	18	19	20	21
0	1	0	1	0	1	0

note 6 : Delay value is approximate.

note 7 : DA (6:0) is fixed at 00H, when CNTSEL is "H" or "open". This value is the upper limit by setting MOD as next page.

MOD1	MOD0	Upper limit of VD6 to VD0 CLK-delay setting (HEXADECIMAL)
0	0	Prohibit
0	1	59H
1	0	6BH
1	1	7FH

note 8 : This delay value is typical at Ta = 25˚C, V_{CC} = 3.3 V. By changing ambient temperature and power supply, the delay will be changed also.
See the following references.

① Variation of CLK delay by temperature drift. (as reference)
The temperature constant of CLK delay is 0.2 % / ˚C.
Calculated example:
In case that delay time is 20 ns at Ta = 25˚C;
(a) In case of Ta rising to 50 ˚C.
Increase of delay time → (50˚C-25˚C) × 0.002 × 20 ns = +1 ns
So, the total delay time is 21 ns at Ta = 50˚C.
(b) In case of Ta falling to 0˚C.
Decrease of delay time → (0˚C-25˚C) × 0.002 × 20ns = –1 ns
So, the total delay time is 19 ns at Ta = 0˚C.

② Variation of CLK delay time against V_{CC} voltage change. (as reference)
Increase of 35 % / V in case of rising from V_{CC} = 3.3 V.
Decrease of 48 % / V in case of falling from V_{CC} = 3.3 V.
Calculated example:
In case that delay time is 20 ns at V_{CC} = 3.3 V.
(a) In case of V_{CC} rising to 3.6 V.
Decrease of delay time → (3.3 V-3.6 V) × 0.35 × 20 ns = –2.1 ns
So, the total delay time is 17.9 ns at V_{CC} = 3.6 V.
(b) In case of V_{CC} falling to 3.0 V.
Increase of delay time → (3.3 V-3.0 V) × 0.48 × 20 ns = +2.88 ns
So, the total delay time is 22.88 ns at V_{CC} = 3.0 V.

Table 5. CLK reverse signal

CKS	FUNCTION
0	Data is sampled on rising edge of CLK. 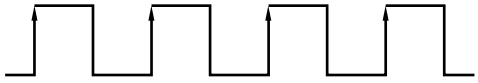
1	Data is sampled on falling edge of CLK. 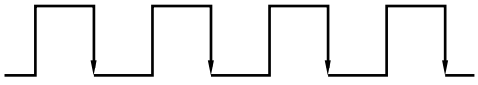

note 9 : CKS is "0", when CNTSEL is "H" or "open".

Table 6. Display horizontal position (HD8 to HD0; 9 bit)

HD8	HD7	HD6	HD5	HD4	HD3	HD2	HD1	HD0	Horizontal position [CLK] (**note 10**)
0	0	0	0	0	0	0	0	0	Prohibit
0	0	0	0	0	0	0	0	1	Prohibit
•	•	•	•	•	•	•	•	•	•
•	•	•	•	•	•	•	•	•	•
0	0	0	1	1	1	1	1	1	Prohibit
0	0	1	0	0	0	0	0	0	64
0	0	1	0	0	0	0	0	1	65
•	•	•	•	•	•	•	•	•	•
•	•	•	•	•	•	•	•	•	•
1	1	1	1	1	1	1	0	1	509
1	1	1	1	1	1	1	1	0	510
1	1	1	1	1	1	1	1	1	511

note 10 : This is CLK number from Hsync-fall to effecting VIDEO signal.
note 11 : Horizontal position is set at 296 CLK, when CNTSET is "H" or "open".

Table 7. Display horizontal CLK numbers (HSE10 to HSE0; 11 bit)

HSE10	HSE9	HSE8	HSE7	HSE6	HSE5	HSE4	HSE3	HSE2	HSE1	HSE0	CLK number (**note 12**)
0	0	0	0	0	0	0	0	0	0	0	0
0	0	0	0	0	0	0	0	0	0	1	1
0	0	0	0	0	0	0	0	0	1	0	2
0	0	0	0	0	0	0	0	0	1	1	3
0	0	0	0	0	0	0	0	1	0	0	4
•	•	•	•	•	•	•	•	•	•	•	•
•	•	•	•	•	•	•	•	•	•	•	•
•	•	•	•	•	•	•	•	•	•	•	•
1	1	1	1	1	1	1	1	1	0	1	2045
1	1	1	1	1	1	1	1	1	1	0	2046
1	1	1	1	1	1	1	1	1	1	1	2047

note 12 : This is from one falling edge of Hsync to the next Hsync.
note 13 : CLK number is set 1344 CLK, when CNTSEL is "H" or "open".
note 14 : Set HSE0 to 10 complying with CLK number of Hsync. If the setting value is different from actual input signal, it cause a malfunction.

Table 8. Setting of CLK frequency (MOD1 to MOD0; 2 bit)

MOD1	MOD0	CLK frequency [MHz]
0	0	Prohibit
0	1	65 to 79
1	0	50 to 65
1	1	20 to 50

note 15 : Set MOD0 and MOD1 complying with input CLK frequency.
note 16 : CLK frequency is set 65 to 79 MHz, when CNTSEL is "H" or "open".

EXPANSION FUNCTION

HOW TO USE EXPANSION FUNCTION AND SCREEN IMAGE

Expansion mode is a function to expand screen. For example, VGA signal has 640 × 480 pixels. But, if the display data can expanded to 1.6 times vertically and horizontally, VGA screen image can be displayed fully on the screen of XGA resolution.

This LCD module has the function of expanding vertical direction as shown in Table 1. And expanding horizontal direction is possible by setting input CLK frequency which is equivalent to the magnification. It is necessary to make this CLK outside of this LCD module.

DISPLAY IMAGE of after two pages is display example, when DE function is default and HD and VD are set to most suitable frequency. And when DE function is used, HD and VD become default. Please adjust the display to the best position by DE signal.

Please adopt these modes after evaluating display quality, because of becoming bad display in some cases.

The followings show display magnifications for each mode.

Input display	Resolution	Magnification	
		Vertical	Horizontal *
XGA	1024 × 768	1	1
SVGA	800 × 600	1.25	1.25
VGA	640 × 480	1.6	1.6
VGA TEXT	720 × 400	1.6	1.4
PC-9801	640 × 400	1.6	1.6
NTSC	640 × (vertical 240 × 2)	3.2	1.6
PAL	640 × (vertical 280 × 2)	2.5	1.6

* The horizontal magnification multiples the input clock (CLK).

Input CLK = system CLK × horizontal magnification

Example :

In case of XGA, VGA and PC-9801, CLK frequency can be decided as follows.

XGA : (system CLK (65MHz)) × 1.0=65MHz

VGA : (system CLK (25.175MHz)) × 1.6=40.28MHz

PC-9801 : (system CLK (21.053MHz)) × 1.6=33.68MHz

SETTING SERIAL DATA FOR EXPANSION

Input signal								Module serial-data setting		
Mode	CLK [MHz]	Hsync [kHz]	Vsync [Hz]	Horizontal		Vertical		HSE	HD	VD
				Count number [CLK]	DSP (**note 1**) [CLK]	Count number [H]	DSP (**note 1**) [H]			
				(A)	(B)	–	(C)	Calculation formula		
								(A) × Vertical magnitude	(B) × Horizontal magnitude	= (C)
XGA	65.000 75.000 79.000 78.750	48.363 56.476 58.088 60.023	60.004 70.069 72.980 75.029	1344 1328 1360 1312	296 280 328 272	806 806 807 800	35 35 39 31	(A) × 1	(B) × 1	= (C)
SVGA	36.000 40.000 50.000 49.500	35.156 37.879 48.077 46.875	56.25 60.317 72.188 75.000	1024 1056 1040 1056	200 216 184 240	625 628 666 666	24 27 29 24	(A) × 1.25	(B) × 1.25	
VGA	25.175 31.500 31.500 31.334	31.469 37.861 37.500 34.971	59.940 72.809 75.000 66.611	800 832 840 896	144 168 184 176	525 520 500 525	35 31 19 6	(A) × 1.6	(B) × 1.6	
VGA TEXT	28.322 31.500	31.469 37.927	70.087 85.040	900 936	153 180	449 446	37 45	(A) × 1.4	(B) × 1.4	
PC-9801	21.053 25.175	24.827 31.469	56.424 70.086	848 800	144 144	440 449	33 37	(A) × 1.6	(B) × 1.6	433
NTSC	20.000	15.734	59.940	–	205	262.5	9	1271	= (B)	= (C)
PAL	20.000	15.625	50.000	–	205	312.5	9	1280	= (B)	= (C)

note 1 : DSP = Display Start Period. DSP is the total of "pulse-width" and "back-porch".
note 2 : HD and VD are approximate values. Set HD and VD in case of adjusting display to the screen center.
note 3 : The pulse-width of Hsync, Vsync and back-porch are the same as XGA-mode. (Standard-mode).
note 4 : Detail of HSE is mentioned in CLK number of Table 7.
note 5 : Detail of HD is mentioned in horizontal position of Table 6.
note 6 : Detail of VD is mentioned in vertical position of Table 3.

DISPLAY IMAGE

(1) SVGA MODE (800×600)

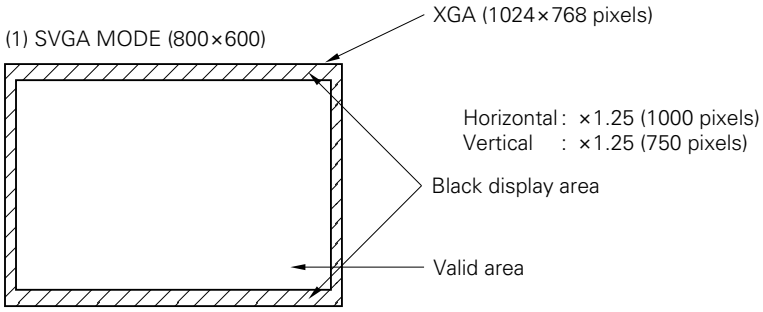

(2) VGA MODE (640×480)

Horizontal : ×1.6 (1024 pixels)
Vertical : ×1.6 (768 pixels)

(3) PC-9801 MODE (640×400)

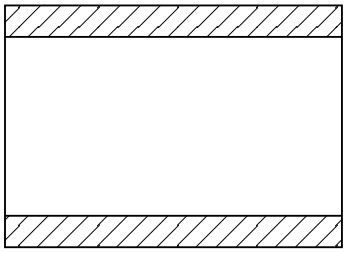

Horizontal : ×1.6 (1024 pixels)
Vertical : ×1.6 (640 pixels)

(4) VGA-TEXT MODE (720×400)

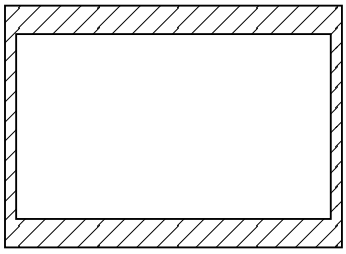

Horizontal : ×1.4 (1008 pixels)
Vertical : ×1.6 (640 pixels)

(5) NTSC MODE (640×240)

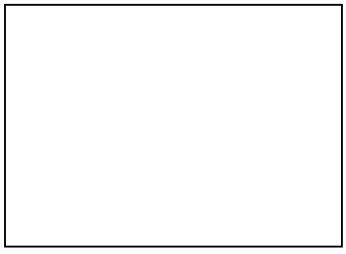

Horizontal : ×1.6 (1024 pixels)
Vertical : ×3.2 (768 pixels)

(6) PAL MODE (640×280)

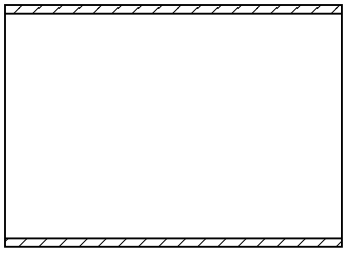

Horizontal : ×1.6 (1024 pixels)
Vertical : ×2.5 (700 pixels)

INPUT SIGNAL TIMING

(1) XGA-MODE (Standard) Without use serial communication (CNTSEL = "H" or OPEN)

Name		Symbol	min.	typ.	max.	Unit	Remarks
CLK	Frequency	1 / tc	52.0 –	65.0 15.385	79.0 –	MHz ns	XGA standard
	Rise / fall	tcrf	–	–	10.0	ns	–
	Duty	tch / tc	0.4	0.5	0.6	–	–
Hsync	Period	th	16.6 –	20.677 1344	22.7 –	μs CLK	48.363 kHz (typ.)
	Display	thd	– –	15.754 1024	– –	μs CLK	–
	Front-porch	thf	– 10	0.369 24	- -	μs CLK	–
	Pulse-width	thp	– 16	2.092 136	– –	μs CLK	–
	Back-porch	thb	1.0 44	2.462 160	– –	μs CLK	–
	Pulse-width + Back-porch	thpb	1.8	–	–	μs	–
	CLK-Hsync timing hold / setup time	thch	4.0	–	–	ns	–
		thcs	2.0	–	–	ns	–
	V-Hsync timing hold / setup time	thvh	4.0	–	–	ns	–
		thvs	1.0	–	–	CLK	–
	Rise / fall	thrf	–	–	10.0	ns	–
Vsync	Period	tv	13.3 –	16.665 806	18.5 –	ms H	60.004 Hz (typ.)
	Display	tvd	– –	15.880 768	– –	ms H	–
	Front-porch	tvf	– 1	62.031 3	– –	μs H	–
	Pulse-width	tvp	– 2	124.06 6	– –	μs H	–
	Back-porch	tvb	– 5	599.63 29	– –	μs H	–
	Rise / fall	tvrf	–	–	10.0	ns	NTSC/PAL MODE
	Field timing	tfi	±1	–	–	H	–
DE	Setup time	tds	2.0	–	–	ns	–
	Hold time	tdh	4.0	–	–	ns	–
	Rise/fall	tdrf	–	–	10.0	ns	–
Analog RGB		tda	5.0	–	–	ns	–

Without use serial communication (CNTSEL = "H" or OPEN)

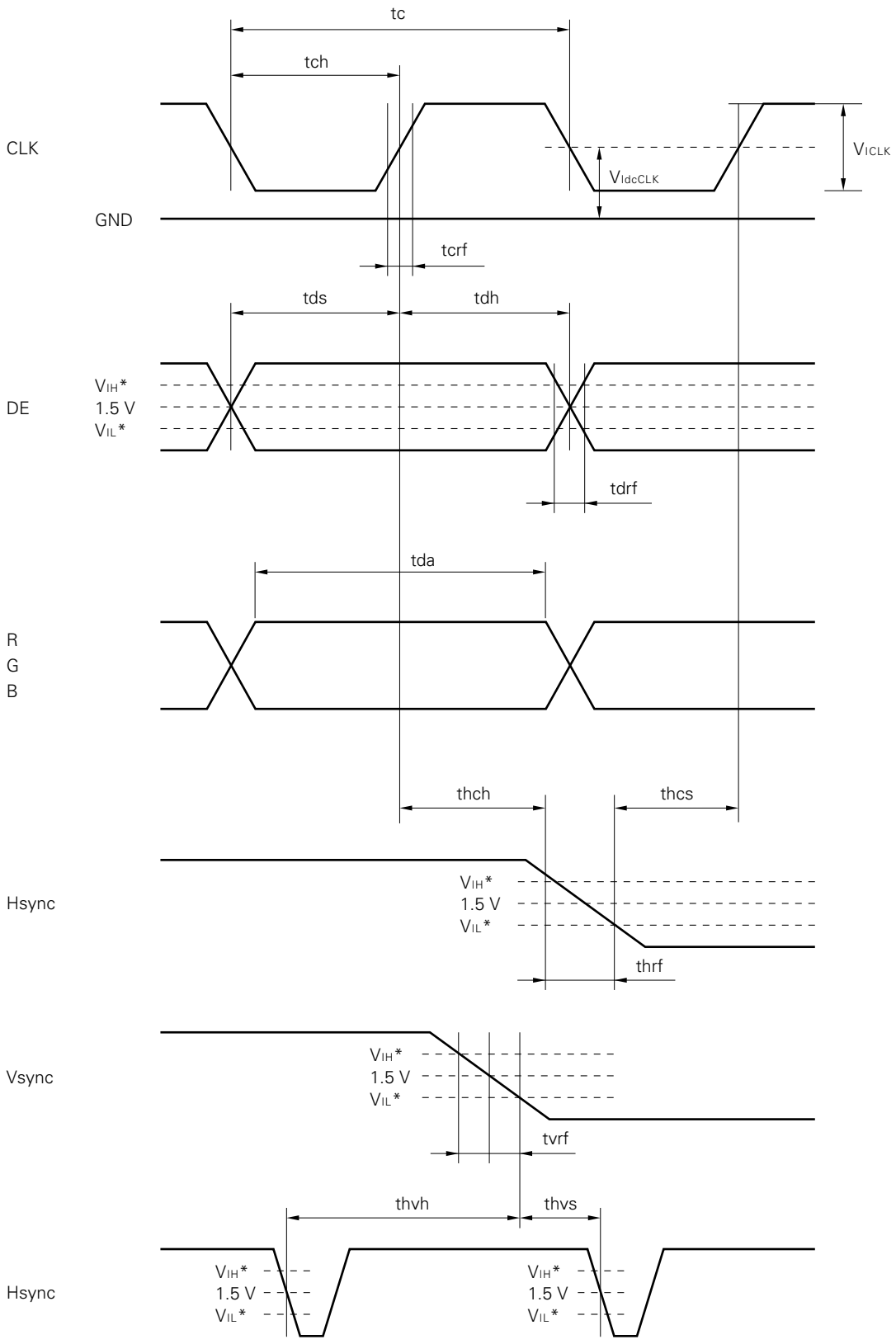

*V_{IH} = 2.2 V (min.) to 5.25 V (max.)
V_{IL} = 0 V (min.) to 0.8 V (max.)

<Horizontal>

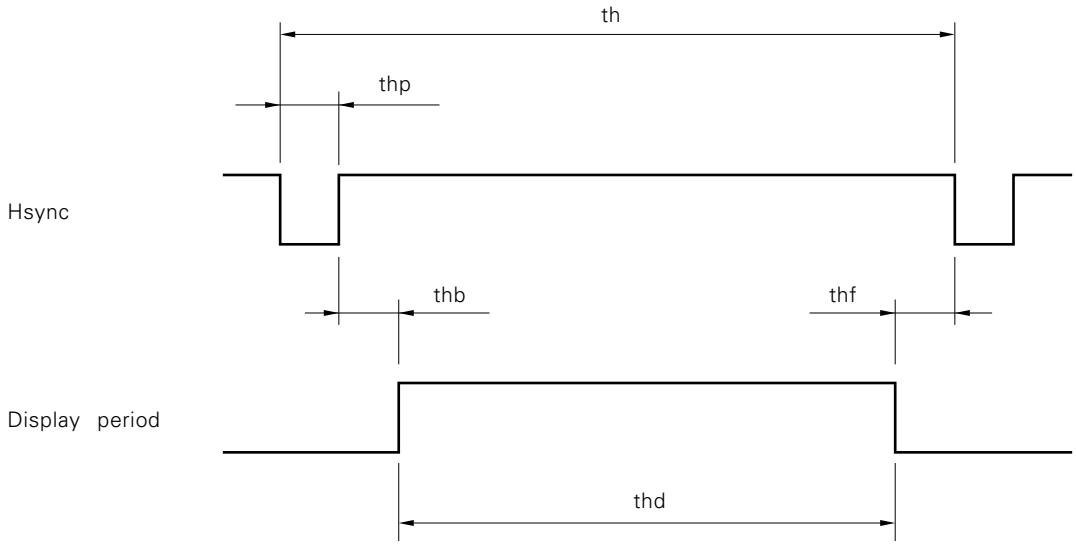

<Vertical>

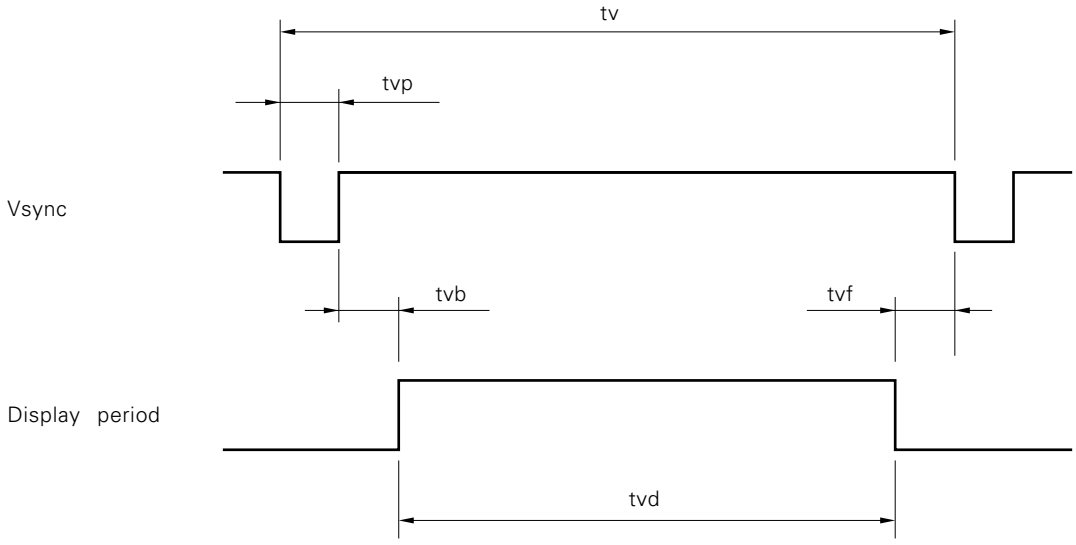

(NTSC/PAL)

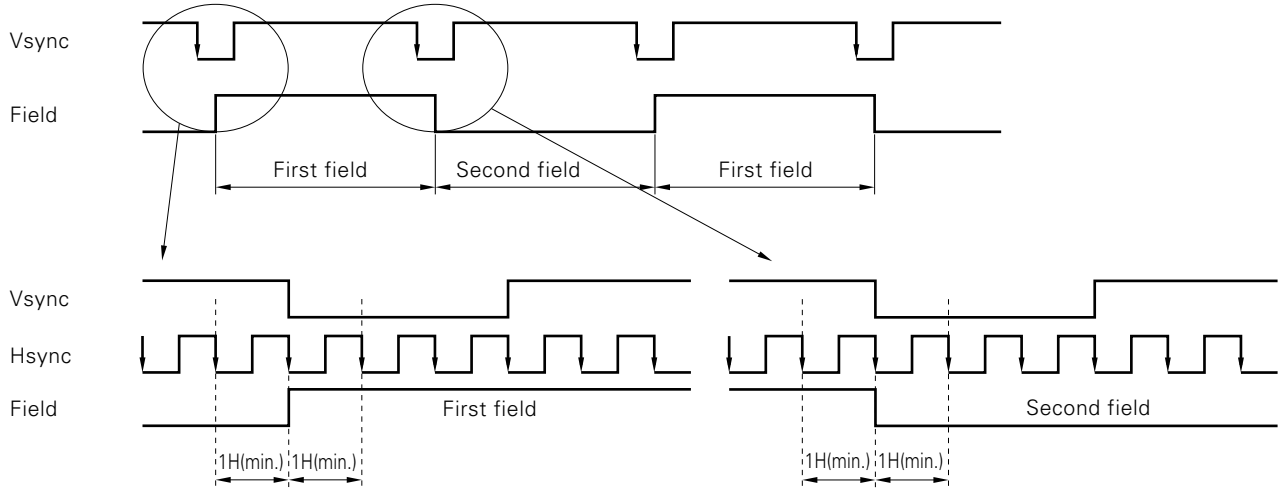

(2) Timing for generating CLAMP signal internally

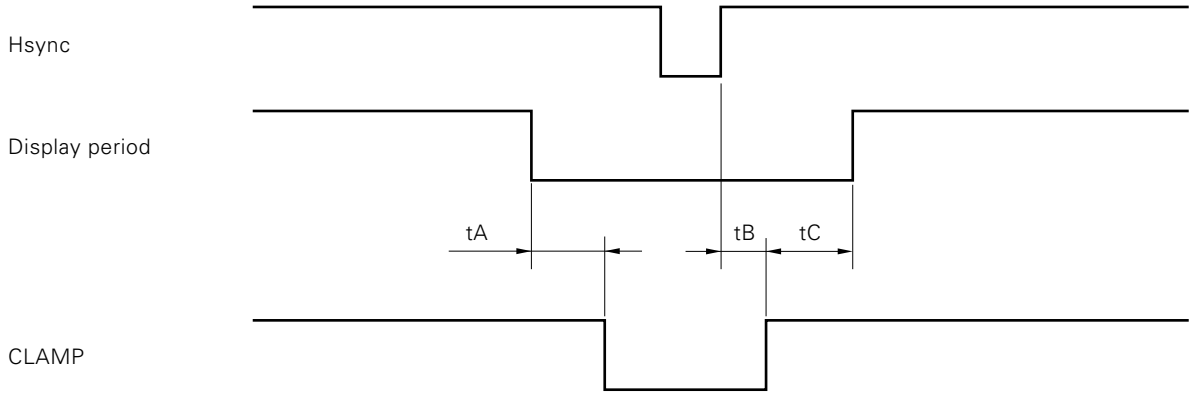

MOD1	MOD0	tA [CLK]	tB [CLK]	tC [ns]
0	0	Prohibit		
0	1	44	32	200 min.
1	0	34	22	
1	1	28	18	

note : Exclude noises on analog RGB signal. Because during CLAMP = "L", the pedestal level of analog RGB signals is sampled. If noises are on the analog signals, luminance level of display is changed and the display becomes bad.

(3) Timing for inputting CLAMP signal from outside

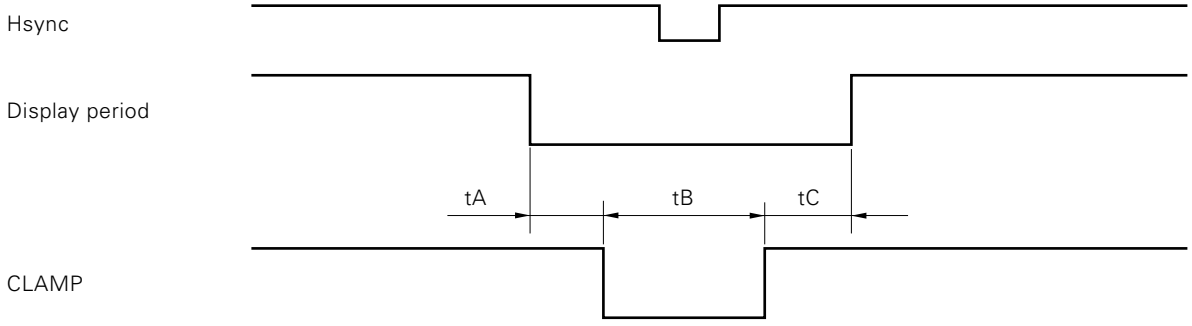

ITEMS	min.	typ.	max.	Unit	Remarks
tA	0.1	–	–	μs	–
tB	0.3	–	–	μs	–
tC	0.2	–	–	μs	–

note : Exclude noises on analog RGB signal. Because during CLAMP = "L", the pedestal level of analog RGB signals is sampled. If noises are on the analog signals, luminance level of display is changed and the display becomes bad.

INPUT SIGNAL AND DISPLAY POSITION (XGA STANDARD TIMING)

(1) DELSEL="L"

Pixels

D (0, 0)	D (0, 1)	D (0, 2)	• • • • • •	D (0, 1023)
D (1, 0)	D (1, 1)			
D (2, 0)				
⋮				⋮
D (767, 0)	D (767, 1)	D (767, 2)	• • • • • •	D (767, 1023)

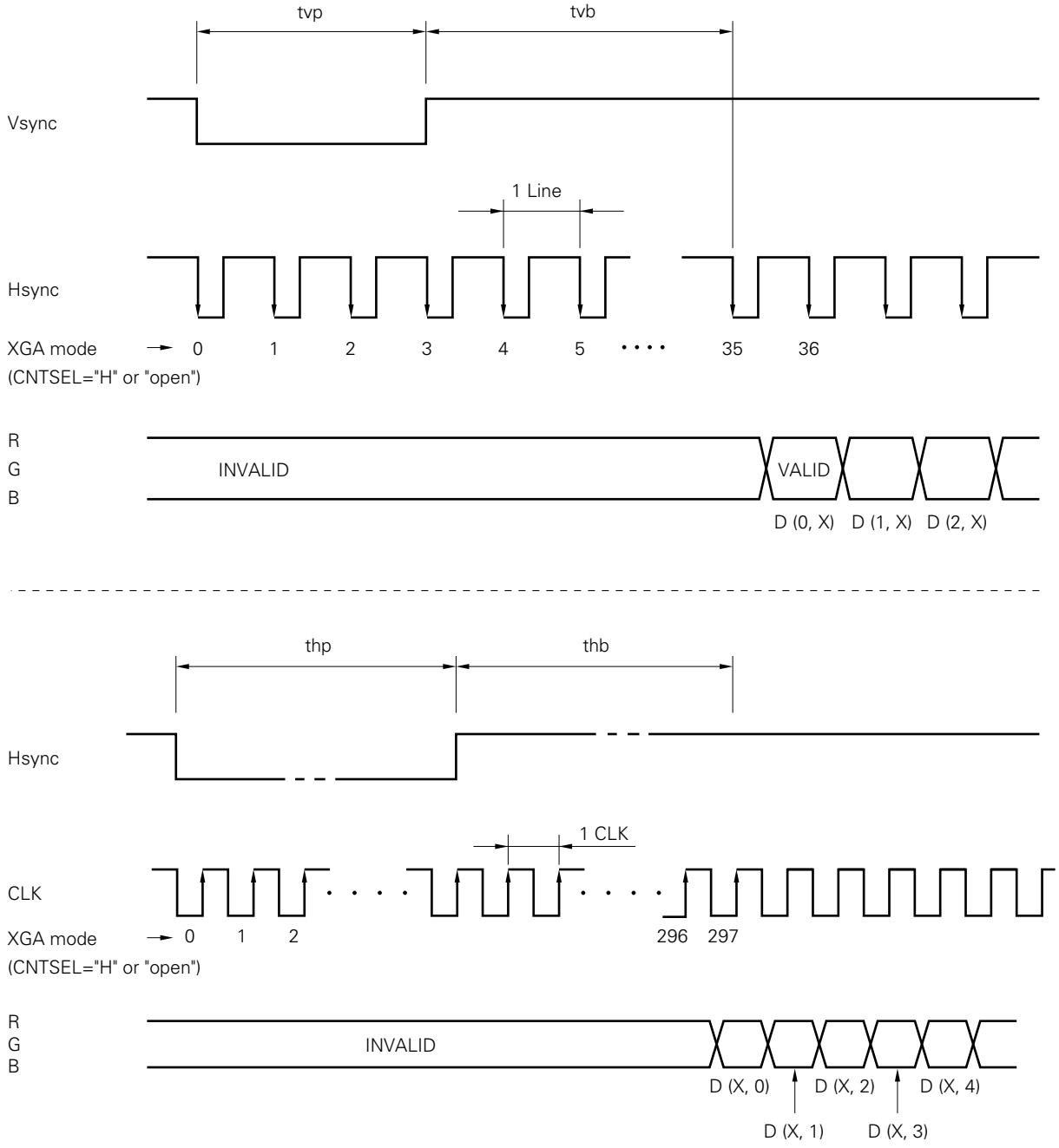

(2) DELSEL="H"

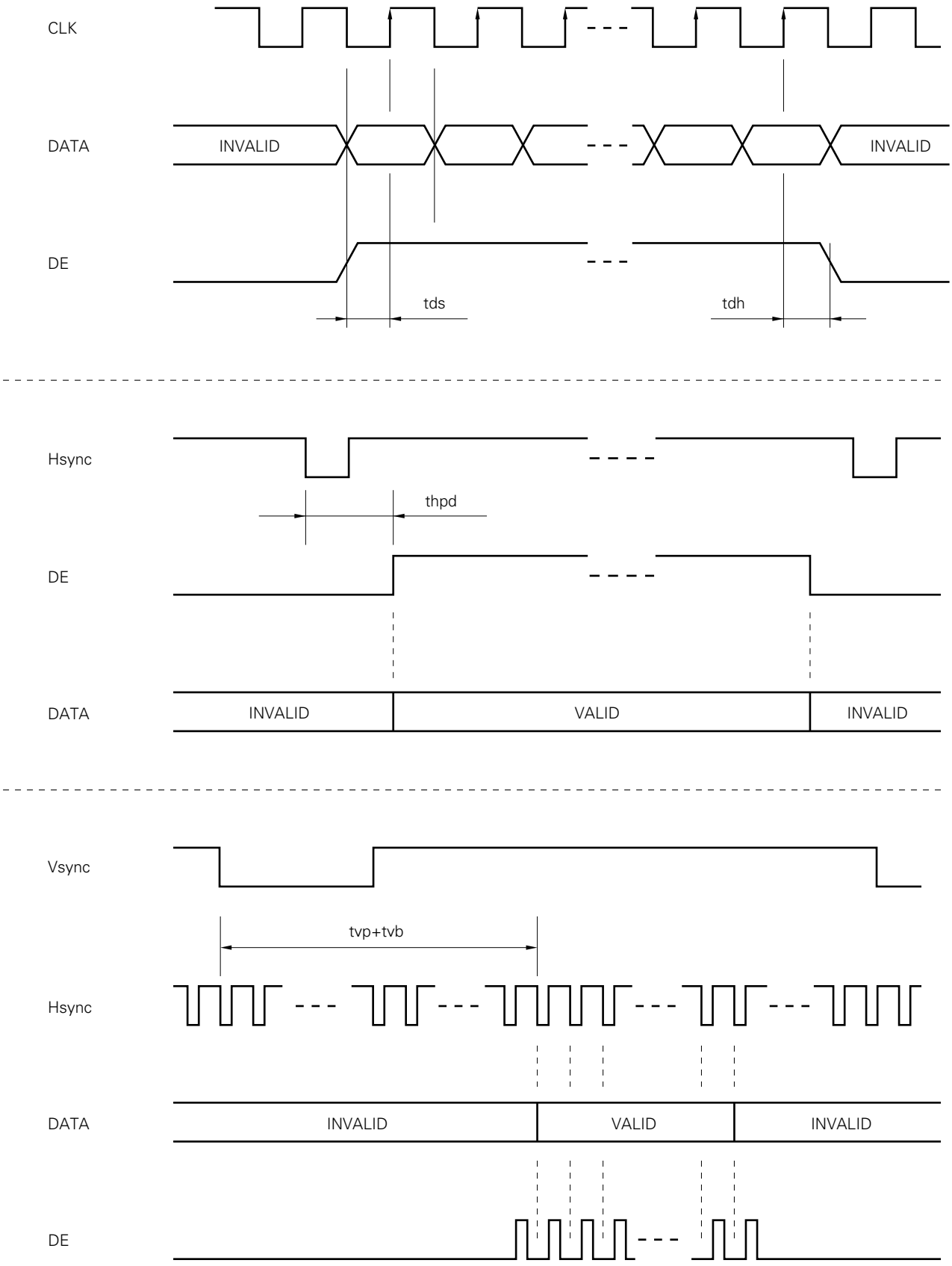
CLK
DATA
INVALID
INVALID
DE
tds
tdh
Hsync
thpd
DE
DATA
INVALID
VALID
INVALID
Vsync
tvp+tvb
Hsync
DATA
INVALID
VALID
INVALID
DE

GENERAL CAUTION

WARNING

Do not touch an inverter --on which is stuck a caution label-- while the LCD module is under the operation, because of dangerous high voltage.

ATTENTION

Input data can be changed during power on, but LCD display may be disturbed. When the serial data are changed, we recommend that the backlight power is off using BRTC function.

(1) Caution when taking out the module

① Pick the pouch only, when taking out module from a shipping package.

(2) Cautions for handling the module

① As the electrostatic discharges may break the LCD module, handle the LCD module with care. Peel a protection sheet off from the LCD panel surface as slowly as possible.

② As the LCD panel and back-light element are made from fragile glass material, impulse and pressure to the LCD module should be avoided.

③ As the surface of polarizer is very soft and easily scratched, use a soft dry cloth without chemicals for cleaning.

④ Do not pull the interface connectors in or out while the LCD module is operating.

⑤ Put the module display side down on a flat horizontal plane.

⑥ Handle connectors and cables with care.

⑦ The torque to mounting screws should be less than 0.392N•m (4 kgf•cm).

(3) Cautions for the operation

① When the module is operating, do not lose CLK, Hsync, or Vsync signals. If any one of these signals is lost, the LCD panel would be damaged.

② Obey the supply voltage sequence. If wrong sequence is applied, the module would be damaged.

③ Connect the variable resistor or fixed resistor (10 kΩ or less) to the pin of BRTH and BRTL. If the resistors are not connected, the life of fluorescent lamp would be short.

④ Please use a range of ELECTRICAL CHARACTERISTICS. If use over range of ABSOLUTE MAXIMUM RATING, we can not guarantee the operation of LCD.

(4) Cautions for the atmosphere

① Dew drop atmosphere should be avoided.

② Do not store and / or operate the LCD module in a high temperature and/or humidity atmosphere. Storage in an electro-conductive polymer packing pouch and under relatively low temperature atmosphere is recommended.

(5) Cautions for the module characteristics

① Do not apply fixed pattern data signal to the LCD module at product aging. Applying fixed pattern for a long time may cause image sticking.

(6) Other cautions

① Do not disassemble and / or reassemble LCD module.

② Do not re-adjust variable resistor or switch etc.

③ When returning the module for repair or etc., Please pack the module not to be broken.
We recommend to use the original shipping packages.

Liquid Crystal Display has following specific characteristics. These are not defects or malfunction.
The display condition of LCD module may be affected by the ambient temperature.
The LCD module uses cold cathode tube for backlight. The optical characteristics, like luminance or uniformity, will change during life time.
Uneven brightness and/or small spots may be noticed depending on different display patterns.

OUTLINE DRAWING : Front View (Unit in mm)

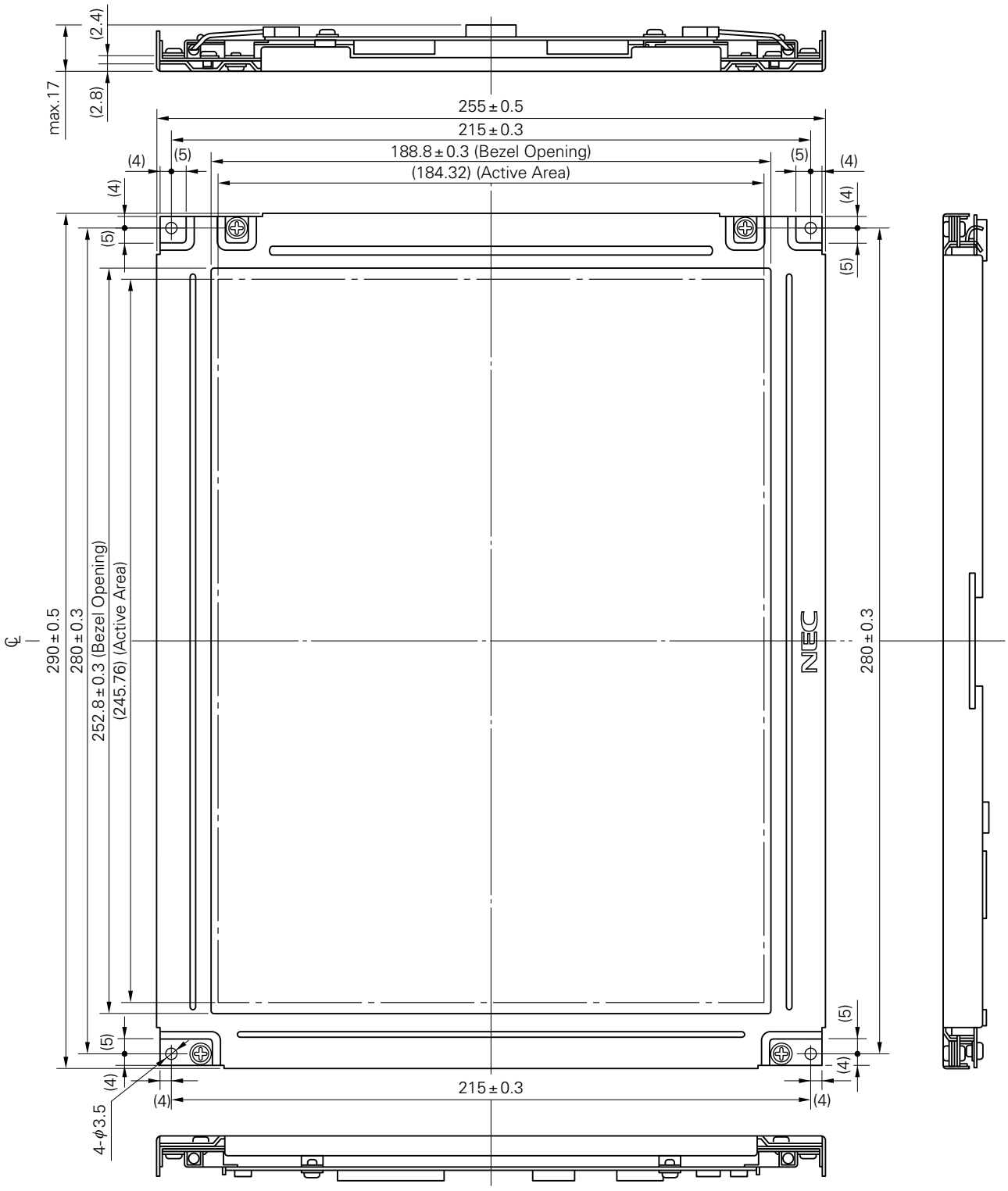

note : The torque to mounting screws should be less than 0.392 N•m (4 kgf•cm).

OUTLINE DRAWING : Rear View (Unit in mm)

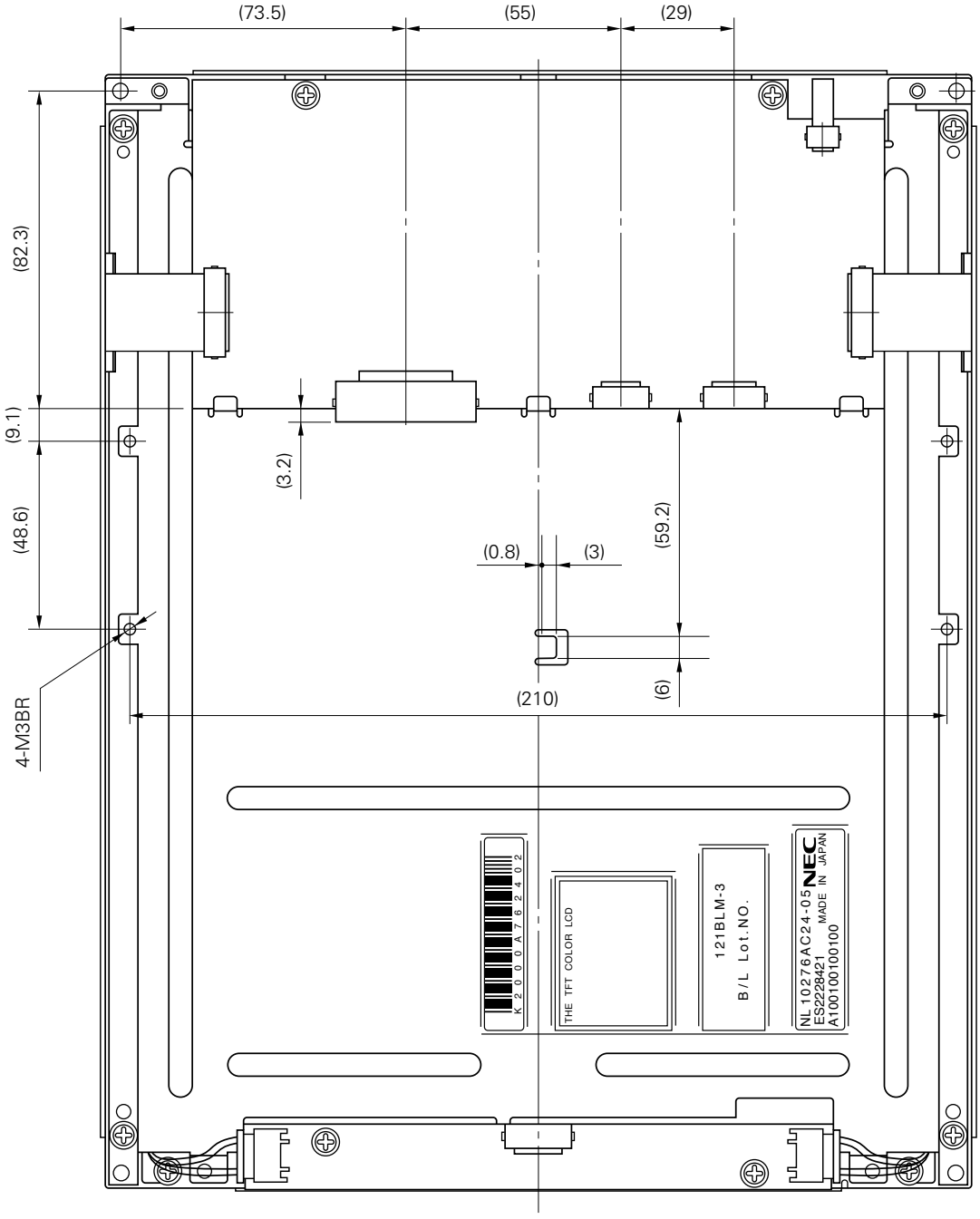

note : The torque to mounting screws should be less than 0.392 N•m (4 kgf•cm).

No part of this document may be copied in any form or by any means without the prior written consent of NEC Corporation.
NEC Corporation does not assume any liability for infringement of patents, copyrights or other intellectual property rights of third parties by or arising from use of a device described herein or any other liability arising from use of such device. No license, either express, implied or otherwise, is granted under any patents, copyrights or other intellectual property rights of NEC Corporation or others.