NEC LCD Technologies, Ltd.

TFT COLOR LCD MODULE

NL160120AC27-22B

54 cm (21.3 Type)
UXGA
LVDS Interface (2 port)

DATA SHEET

DOD-PP-0919 (2nd edition)

This DATA SHEET is updated document from DOD-PP-0675(1).

All information is subject to change without notice. Please confirm the sales representative before starting to design your system.

INTRODUCTION

NEC does and will not assume any liability for infringement of patents, copyrights or other intellectual property rights of any third party arising out of or in connection with application of the products described herein except for that directly attributable to mechanisms and workmanship thereof. No license, express or implied, is granted under any patent, copyright or other intellectual property right of NEC.

Some electronic parts/components would fail or malfunction at a certain rate. In spite of every effort to enhance reliability of products by NEC, the possibility of failures and malfunction might not be avoided entirely. To prevent the risks of damage to death, human bodily injury or other property arising out thereof or in connection therewith, each customer is required to take sufficient measures in its safety designs and plans including, but not limited to, redundant system, fire-containment and anti-failure.

The products are classified into three quality grades: **"Standard"**, **"Special"**, and **"Specific"** of the highest grade of a quality assurance program at the choice of a customer. Each quality grade is designed for applications described below. Any customer who intends to use a product for application other than that of Standard quality grade is required to contact an NEC sales representative in advance.

The **Standard** quality grade applies to the products developed, designed and manufactured in accordance with the NEC standard quality assurance program, which are designed for such application as any failure or malfunction of the products (sets) or parts/components incorporated therein a customer uses are, directly or indirectly, free of any damage to death, human bodily injury or other property, like general electronic devices.

Examples: Computers, office automation equipment, communications equipment, test and measurement equipment, audio and visual equipment, home electronic appliances, machine tools, personal electronic equipment, industrial robots, etc.

The **Special** quality grade applies to the products developed, designed and manufactured in accordance with an NEC quality assurance program stricter than the standard one, which are designed for such application as any failure or malfunction of the products (sets) or parts/components incorporated therein a customer uses might directly cause any damage to death, human bodily injury or other property, or such application under more severe condition than that defined in the Standard quality grade without such direct damage.

Examples: Control systems for transportation equipment (automobiles, trains, ships, etc.), traffic control systems, anti-disaster systems, anti-crime systems, medical equipment not specifically designed for life support, safety equipment, etc.

The **Specific** quality grade applies to the products developed, designed and manufactured in accordance with the standards or quality assurance program designated by a customer who requires an extremely higher level of reliability and quality for such products.

Examples: Military systems, aircraft control equipment, aerospace equipment, nuclear reactor control systems, medical equipment/devices/systems for life support, etc.

The quality grade of this product is the **"Standard"** unless otherwise specified in this document.

CONTENTS

CONTENTS

1. OUTLINE

1.1 STRUCTURE AND PRINCIPLE

Color LCD module NL160120AC27-22B is composed of the amorphous silicon thin film transistor liquid crystal display (a-Si TFT LCD) panel structure with driver LSIs for driving the TFT (Thin Film Transistor) array and a backlight.

The a-Si TFT LCD panel structure is injected liquid crystal material into a narrow gap between the TFT array glass substrate and a color-filter glass substrate.

Grayscale data signals from a host system (e.g. signal generator, etc.) are modulated into best form for active matrix system by a signal processing board, and sent to the driver LSIs which drive the individual TFT arrays.

The TFT array as an electro-optical switch regulates the amount of transmitted light from the backlight assembly, when it is controlled by data signals. Color images are created by regulating the amount of transmitted light through the TFT array of red, green and blue dots.

1.2 APPLICATION

- Color monitor system

1.3 FEATURES

- Ultra-wide viewing angle (Ultra-Advanced Super Fine TFT (UA-SFT))
- High luminance
- High contrast
- High resolution
- Low reflection
- Wide color gamut
- 256 gray scale in each R, G, B sub-pixel (8-bit), 16,777,216 colors
- LVDS interface
- Adjustable gamma characteristics by using built-in 10-bit LUT (look up table)
- Selectable LVDS data input map
- Small foot print
- Incorporated direct light type backlight with an inverter
- Compliance with the European RoHS directive (2002/95/EC)

2. GENERAL SPECIFICATIONS

Display area	432.0 (H) × 324.0 (V) mm
Diagonal size of display	54 cm (21.3 inches)
Drive system	a-Si TFT active matrix
Display color	16,777,216 colors
Pixel	1,600 (H) × 1,200 (V) pixels (1 pixel consists of 3 sub-pixels (RGB).)
Pixel arrangement	RGB (Red dot, Green dot, Blue dot) vertical stripe
Dot pitch	0.090 (H) × 0.270 (V) mm
Pixel pitch	0.270 (H) × 0.270 (V) mm
Module size	457.0 (W) × 350.0 (H) × 34.0 (D) mm (typ.)
Weight	2,600 g (typ.)
Contrast ratio	1050:1 (typ.)
Viewing angle	*At the contrast ratio ≥ 10:1* • Horizontal: Right side 88° (typ.), Left side 88° (typ.) • Vertical: Up side 88° (typ.), Down side 88° (typ.)
Designed viewing direction	Viewing angle with optimum grayscale (γ≒ DICOM): normal axis (perpendicular) Note1
Polarizer surface	Antiglare
Polarizer pencil-hardness	2H (min.) [by JIS K5400]
Color gamut	*At LCD panel center* 72 % (typ.)[against NTSC color space]
Response time	*Ton+Toff (10%←→ 90%)* 35 ms (typ.)
Luminance	*At the maximum luminance* 860 cd/m^2 (typ.)
Signal system	2 ports LVDS interface (THC63LVD824 THine Electronics, Inc. or equivalent) [RGB 8-bit signals, Data enable signal (DE), Dot clock (CK)]
Power supply voltage	LCD panel signal processing board: 12.0V Inverter: 24.0V
Backlight	Direct light type: 16 cold cathode fluorescent lamps with an inverter (Replaceable part • Inverter: 213PW071)
Power consumption	*At checkered flag pattern, the maximum luminance* 72 W (typ.)

Note1: When the product luminance is 400cd/m^2, the gamma characteristic is designed to γ≒ DICOM.

3. BLOCK DIAGRAM

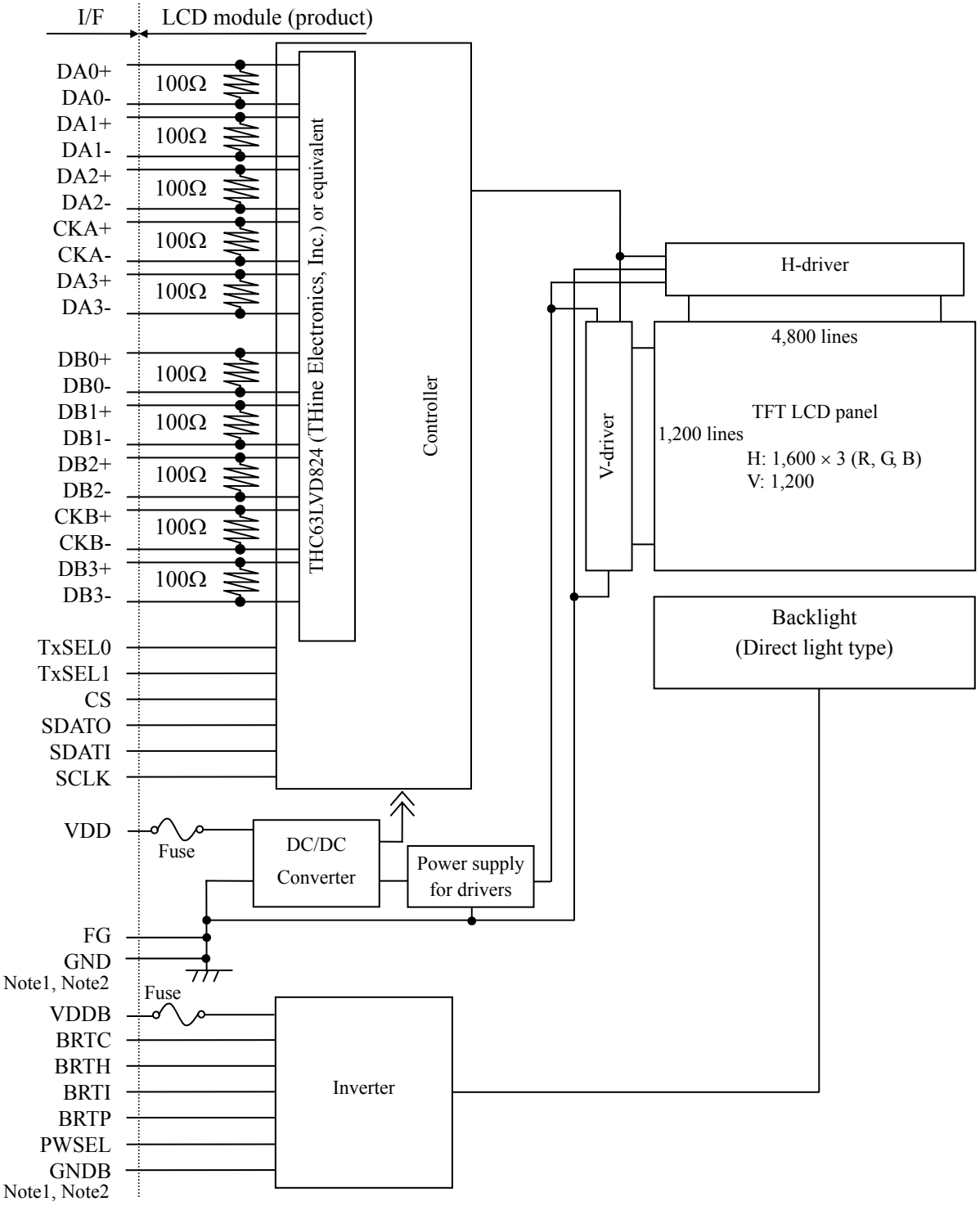

Note1: Relations between GND (Signal ground), FG (Frame ground) and GNDB (Inverter ground) in the LCD module are as follows.

GND - FG	Connected
GND - GNDB	Not connected
FG - GNDB	Not connected

Note2: GND, FG and GNDB must be connected to customer equipment's ground, and it is recommended that these grounds are connected together in customer equipment.

4. DETAILED SPECIFICATIONS

4.1 MECHANICAL SPECIFICATIONS

Parameter	Specification		Unit
Module size	457.0 ±0.5 (W) × 350.0 ±0.5 (H) × 34.0 (typ., D) 37.0 (max. D)	Note1, Note2	mm
Display area	432.0 (H) × 324.0 (V)	Note1	mm
Weight	2,600(typ.), 2,800 (max.)		g

Note1: Excluding warpage of the signal processing board cover and the connection board cover
Note2: See "**7. OUTLINE DRAWINGS**".

4.2 ABSOLUTE MAXIMUM RATINGS

Parameter			Symbol	Rating	Unit	Remarks
Power supply voltage	LCD panel signal processing board		VDD	-0.3 to +14.0	V	Ta = 25°C
	Inverter		VDDB	-0.3 to +27.0	V	
Input voltage for signals	LCD panel signal processing board Note1		Vi	-0.3 to +3.45	V	VDD= 12.0V
	Inverter	BRTI signal	VBI	-0.3 to +1.5	V	VDDB= 24.0V
		BRTP signal	VBP	-0.3 to +5.5	V	
		BRTC signal	VBC	-0.3 to +5.5	V	
		PWSEL signal	VBS	-0.3 to +5.5	V	
Storage temperature			Tst	-20 to +60	°C	-
Operating temperature	Front surface		TopF	0 to +55	°C	Note2
	Rear surface		TopR	0 to +60	°C	Note3
Relative humidity Note4			RH	≤ 95	%	Ta ≤ 40°C
				≤ 85	%	40°C < Ta ≤ 50°C
				≤ 70	%	50°C < Ta ≤ 55°C
Absolute humidity Note4			AH	≤ 73 Note5	g/m^3	Ta > 55°C
Operating altitude			-	≤ 4,850	m	0°C ≤ Ta ≤ 55°C
Storage altitude			-	≤ 13,600	m	-20°C ≤ Ta ≤ 60°C

Note1: DA0+/-, DA1+/-, DA2+/-, DA3+/-, CKA+/-, DB0+/-, DB1+/-, DB2+/-, DB3+/-, CKB+/-
CS, SDATI, SCLK, TxSEL0, TxSEL1
Note2: Measured at center of LCD panel surface (including self-heat)
Note3: Measured at center of LCD module's rear shield surface (including self-heat)
Note4: No condensation
Note5: Water amount at Ta = 55°C and RH = 70%

4.3 ELECTRICAL CHARACTERISTICS

4.3.1 LCD panel signal processing board

(Ta = 25°C)

Parameter		Symbol	min.	typ.	max.	Unit	Remarks
Supply voltage		VDD	10.8	12.0	13.2	V	-
Supply current		IDD	-	400 Note1	600 Note2	mA	at VDD=12.0V
Ripple voltage		VRP	-	-	100	mVp-p	for VDD
Differential input threshold voltage	High	VTH	-	-	+100	mV	at VCM=1.2V Note3, Note4
	Low	VTL	-100	-	-	mV	
Input voltage swing		VI	0	-	2.4	V	Note4
Terminating resistance		RT	-	100	-	Ω	-
Control signal input threshold voltage	High	VIH	Keep this pin open.			-	Note5
	Low	VIL	0	-	0.8	V	
Control signal input current	Low	IIL	-10	-	10	μA	
Serial communication signal input threshold voltage	High	V+	-	1.98	2.07	V	Note6
	Low	V-	0.63	0.66	-	V	
	Hysteresis	VH	0.4	-	-	V	
Output signal threshold voltage	High	VOH	2.4	-	-	V	Note7
	Low	VOL	-	-	0.4	V	
Output signal current	High	IOH	-12	-	-	mA	
	Low	IOL	-	-	12	mA	

Note1: Checkered flag pattern (by EIAJ ED-2522)
Note2: Pattern for maximum current
Note3: Common mode voltage for LVDS driver
Note4: DA0+/-, DA1+/-, DA2+/-, DA3+/-, CKA+/-, DB0+/-, DB1+/-, DB2+/-, DB3+/-, CKB+/-
Note5: T_XSEL0, T_XSEL1
Note6: CS, SDATI, SCLK
Note7: SDATO

4.3.2 Inverter

(Ta = 25°C)

Parameter			Symbol	min.	typ.	max.	Unit	Remarks
Power supply voltage			VDDB	22.8	24.0	25.2	V	-
Power supply current			IDDB	2,500	2,800	3,100	mA	VDDB = 24.0V, At the maximum luminance
Input voltage for signals	BRTI signal		VBI	0.25	-	1.0	V	-
	BRTP signal	High	VBPH	2.0	-	5.25	V	
		Low	VBPL	0	-	0.8	V	
	BRTC signal	High	VBCH	2.0	-	5.25	V	
		Low	VBCL	0	-	0.8	V	
	PWSEL signal	High	VBSH	2.0	-	5.25	V	
		Low	VBSL	0	-	0.8	V	
Input current for signals	BRTI signal		IBI	-200	-	1,000	μA	
	BRTP signal	High	IBPH	-	-	1,000	μA	
		Low	IBPL	-600	-	-	μA	
	BRTC signal	High	IBCH	-	-	440	μA	
		Low	IBCL	-600	-	-	μA	
	PWSEL signal	High	IBSH	-	-	440	μA	
		Low	IBSL	-600	-	-	μA	

4.3.3 Inverter current wave

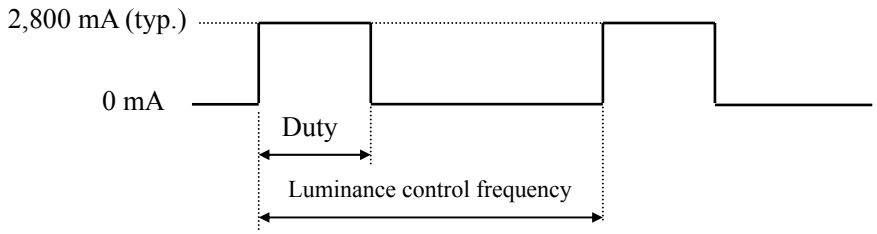

Maximum luminance control: 100%
Minimum luminance control: 20%
Luminance control frequency: 270Hz (typ.)

Note1: Luminance control frequency indicate the input pulse frequency, when select the external pulse control. See "**4.6.3 Detail of BRTP timing**".

Note2: The power supply lines (VDDB and GNDB) have large ripple voltage (See "**4.3.4 Power supply voltage ripple**".) during luminance control. There is the possibility that the ripple voltage produces acoustic noise and signal wave noise in audio circuit and so on. Put a capacitor (5,000 to 6,000μF) between the power supply lines (VDDB and GNDB) to reduce the noise, if the noise occurred in the circuit..

4.3.4 Power supply voltage ripple

This product works, even if the ripple voltage levels are beyond the permissible values as following the table, but there might be noise on the display image.

Power supply voltage		Ripple voltage Note1 (Measure at input terminal of power supply)	Unit
VDD	12.0 V	≤ 100	mVp-p
VDDB	24.0 V	≤ 200	mVp-p

Note1: The permissible ripple voltage includes spike noise.

Example of the power supply connection

a) Separate the power supply

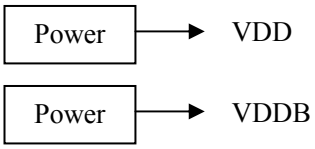

b) Put in the filter

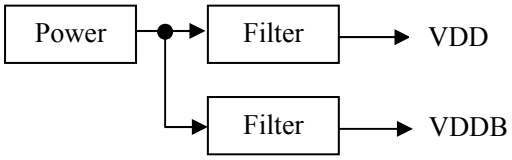

4.3.5 Fuse

Parameter	Fuse		Rating	Fusing current	Remarks
	Type	Supplier			
VDD	FCC16132AB	KAMAYA ELECTRIC Co., Ltd.	1.25A	2.5A, 5 seconds maximum	Note1
			32V		
VDDB	11CT-6.3A	SOC	6.3A	10A, 5 seconds maximum	
			72V		

Note1: The power supply capacity should be more than the fusing current. If it is less than the fusing current, the fuse may not blow in a short time, and then nasty smell, smoke and so on may occur.

4.4 POWER SUPPLY VOLTAGE SEQUENCE

4.4.1 LCD panel signal processing board

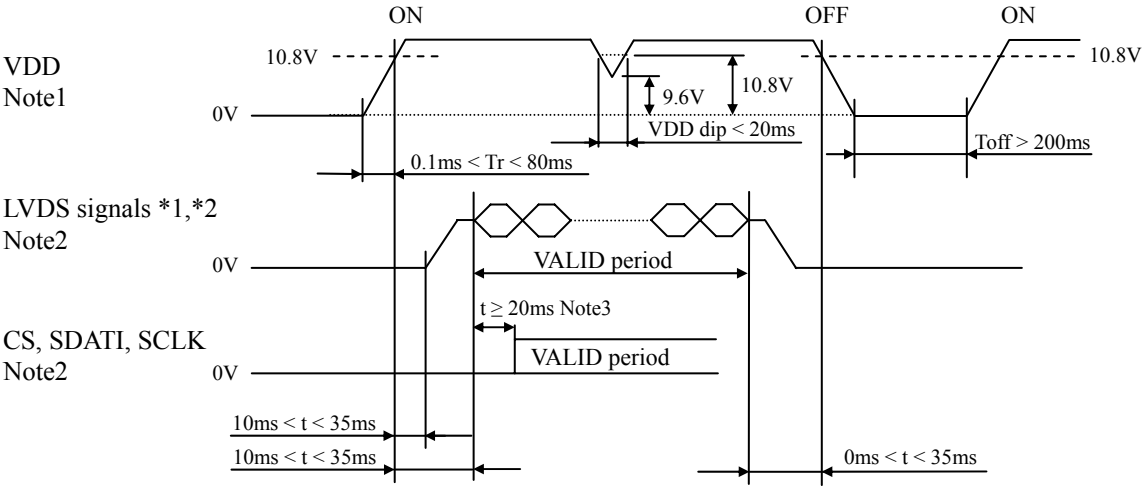

*1: DA0+/-, DA1+/-, DA2+/-, DA3+/-, CKA+/-, DB0+/-, DB1+/-, DB2+/-, DB3+/- and CKB+/-
*2: LVDS signals should be measured at the terminal of 100Ω resistance.

Note1: In terms of voltage variation (voltage drop) while VDD rising edge is below 10.8V, a protection circuit may work, and then this product may not work.
Note2: LVDS signals and CS, SDATI, SCLK must be Low or High-impedance, exclude the VALID period (See above sequence diagram), in order to avoid that internal circuits is damaged.
If some of signals are cut while this product is working, even if the signal input to it once again, it might not work normally. VDD should be cut when the display and function signals are stopped.
Note3: At the beginning of the serial communication mode, take 20ms or more after the LVDS signal input. As writing and reading the LUT data, see "**4.11 TEN-bit LOOK UP TABLE FOR GAMMA ADJUSTMENT**".
Note4: The backlight should be turned on within the valid period of LVDS signals, in order to avoid unstable data display.

4.4.2 Inverter

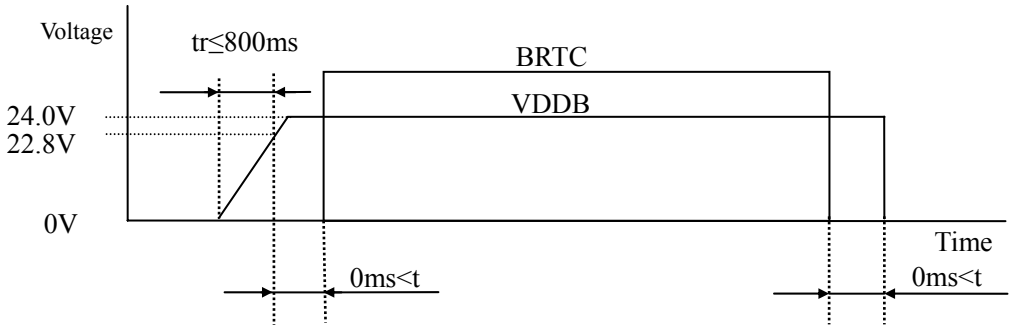

Note1: The backlight should be turned on within the valid period of LVDS signals, in order to avoid unstable data display.
Note2: If tr is more than 800ms, the backlight will be turned off by a protection circuit for inverter.
Note3: When VDDB is ON and BRTC is high, voltage to BRTI, BRTP and PWSEL terminals should be applied.

4.5 CONNECTIONS AND FUNCTIONS FOR INTERFACE PINS

4.5.1 LCD panel signal processing board

CN1 Socket (LCD module side): DF19G-30P-1H (56) (Hirose Electric Co., Ltd. (HRS))
Adaptable plug: DF19-30S-1C (Hirose Electric Co., Ltd. (HRS))

Pin No.	Symbol	Signal	Remarks
1	DA0-	Pixel data A0	Odd pixel data Input (LVDS differential signal) Note1
2	DA0+		
3	DA1-	Pixel data A1	Odd pixel data Input (LVDS differential signal) Note1
4	DA1+		
5	DA2-	Pixel data A2	Odd pixel data Input (LVDS differential signal) Note1
6	DA2+		
7	GND	Ground	Signal ground Note2
8	CKA-	Pixel clock	Odd pixel clock Input (LVDS differential signal) Note1
9	CKA+		
10	DA3-	Pixel data A3	Odd pixel data Input (LVDS differential signal) Note1
11	DA3+		
12	DB0-	Pixel data B0	Even pixel data Input (LVDS differential signal) Note1
13	DB0+		
14	GND	Ground	Signal ground Note2
15	DB1-	Pixel data B1	Even pixel data Input (LVDS differential signal) Note1
16	DB1+		
17	GND	Ground	Signal ground Note2
18	DB2-	Pixel data B2	Even pixel data Input (LVDS differential signal) Note1
19	DB2+		
20	CKB-	Pixel clock	Even pixel clock Input (LVDS differential signal) Note1
21	CKB+		
22	DB3-	Pixel data B3	Even pixel data Input (LVDS differential signal) Note1
23	DB3+		
24	GND	Ground	Signal ground Note2
25	TxSEL0	Selection of LVDS data input map	Note3, Note4
26	TxSEL1		
27	GND	Ground	Signal ground Note2
28	VDD	Power supply	12V Note2
29	VDD		
30	VDD		

TxSEL1	TxSEL0	Mode
Open	Open	A
Open	Low	B
Low	Open	C
Low	Low	A

Note1: Twist pair wires with 100Ω (Characteristic impedance) should be used between LCD panel signal processing board and LVDS transmitter.
Note2: All GND and VDD terminals should be used without any non-connected lines.
Note3: This terminal is pulled-up in the product. (Pull-up resistance: 50kΩ)
Note4: See "**4.7 LVDS DATA INPUT MAP**".

CN2 Socket (LCD module side): SM10B-SRSS-TB (LF)(SN) (J.S.T. Mfg Co., Ltd.)
Adaptable plug: SHR-10V-S, SHR-10V-S-B or 10SR-3S (J.S.T. Mfg Co., Ltd.)

Pin No.	Symbol	Signal	Remarks	
1	RSVD	Reserved	Keep this pin Open.	
2	RSVD			
3	RSVD			
4	GND	Ground	Signal ground	Note1
5	CS	Chip selection	For LUT communication control	Note2
6	SDATO	Serial data output	For LUT output signal	
7	SDATI	Serial data input	For LUT communication control	Note3
8	SCLK	Serial clock	For LUT communication control	Note3
9	GND	Ground	Signal ground	Note1
10	RSVD	Reserved	Keep this pin Open.	

Note1: All GND terminals should be used without any non-connected lines.
Note2: This terminal is pulled-up in the product. (Pull-up resistance: 50kΩ)
Note3: These terminals are pulled-down in the product. (Pull-down resistance: 50kΩ)

4.5.2 Inverter

CN201 socket (LCD module side): DF3Z-10P-2H (2∗) (HIROSE ELECTRIC Co,. Ltd.)
Adaptable plug: DF3-10S-2C (HIROSE ELECTRIC Co,. Ltd.)

Pin No.	Symbol	Function	Description
1	GNDB	Inverter ground	Note1
2	GNDB		
3	GNDB		
4	GNDB		
5	GNDB		
6	VDDB	Power supply	Note1
7	VDDB		
8	VDDB		
9	VDDB		
10	VDDB		

Note1: All VDDB and GNDB terminals should be used without any non-connected lines.

CN202 socket (LCD module side): IL-Z-9PL-SMTYE (Japan Aviation Electronics Industry Limited (JAE))
Adaptable plug: IL-Z-9S-S125C3 (Japan Aviation Electronics Industry Limited (JAE))

Pin No.	Symbol	Function	Description
1	GNDB	Inverter ground	Note1
2	GNDB		
3	N.C.	-	Keep this pin Open.
4	BRTC	Backlight ON/OFF control signal	High or Open: Backlight ON Low: Backlight OFF
5	BRTH	Luminance control terminal	Note2, Note3
6	BRTI		
7	BRTP	BRTP signal	
8	GNDB	Inverter ground	Note1
9	PWSEL	Selection of luminance control signal method	Note2, Note3

Note1: All GNDB terminals should be used without any non-connected lines.
Note2: See "**4.6.1 LUMINANCE CONTROL** ".
Note3: When VDDB is ON and BRTC is high, voltage to BRTI, BRTP and PWSEL terminals should be applied.

4.5.3 Positions of socket

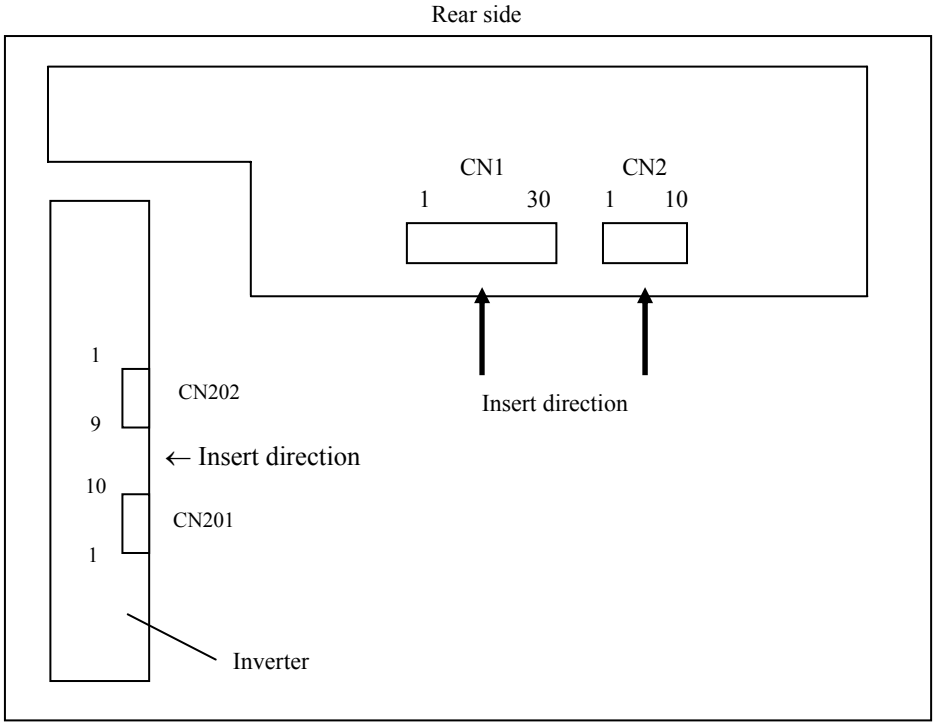

4.6 LUMINANCE CONTROL

4.6.1 Luminance control methods

<table>
<tr><th>Method</th><th>Adjustment and luminance ratio</th><th>PWSEL terminal</th><th>BRTP terminal</th></tr>
<tr><td>Variable resistor control

Note1</td><td>• Adjustment

The variable resistor (R) for luminance control should be 10kΩ ±5%, 1/10W. Minimum point of the resistance is the minimum luminance and maximum point of the resistance is the maximum luminance.
The resistor (R) must be connected between BRTH-BRTI terminals.
 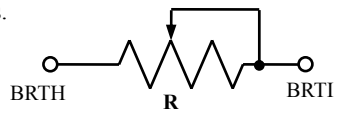

• Luminance ratio Note3
<table><tr><th>Resistance</th><th>Luminance ratio</th></tr><tr><td>1.5 kΩ Note4</td><td>20% (Min. Luminance)</td></tr><tr><td>10 kΩ</td><td>100% (Max. Luminance)</td></tr></table></td><td rowspan="2">High or Open</td><td rowspan="2">Open</td></tr>
<tr><td>Voltage control

Note1
Note5</td><td>• Adjustment

Voltage control method works, when BRTH terminal is 0V and VBI voltage is input between BRTI-BRTH terminals. This control method can carry out continuation adjustment of luminance.
Luminance is the maximum when BRTI terminal is Open.
• Luminance ratio Note3
<table><tr><th>BRTI Voltage (VBI)</th><th>Luminance ratio</th></tr><tr><td>0.2 V Note4</td><td>20% (Min. Luminance)</td></tr><tr><td>1.0 V</td><td>100% (Max. Luminance)</td></tr></table></td></tr>
<tr><td>Pulse width modulation

Note1
Note2
Note6</td><td>• Adjustment

Pulse width modulation (PWM) method works, when PWSEL terminal is Low and PWM signal (BRTP signal) is input into BRTP terminal. The luminance is controlled by duty ratio of BRTP signal.
• Luminance ratio Note3
<table><tr><th>Duty ratio</th><th>Luminance ratio</th></tr><tr><td>0.2 Note4</td><td>20% (Min. Luminance)</td></tr><tr><td>1.0</td><td>100% (Max. Luminance)</td></tr></table></td><td>Low</td><td>BRTP signal</td></tr>
</table>

Note1: In case of the variable resistor control method and the voltage control method, noises may appear on the display image depending on the input signals timing for LCD panel signal processing board.
Use PWM method, if interference noises appear on the display image!

Note2: The inverter will stop working, if the Low period of BRTP signal is more than 500ms while BRTC signal is High or Open. Then the backlight will not turn on anymore, even if BRTP signal is input again. This is not out of order. The inverter will start to work when power is supplied again.

Note3: These data are the target values.

Note4: Do not set the variable resistor, BRTI voltage and Pulse width modulation in less than 1.5kΩ or less than 0.2V or less than 0.2(Duty ratio). Otherwise flicker or display mura may cause, or the lamp may not be turned on.

Note5: See "**4.6.2 Detail of BRTI timing**".

Note6: See "**4.6.3 Detail of BRTP timing**".

4.6.2 Detail of BRTI timing

(1) Timing diagrams

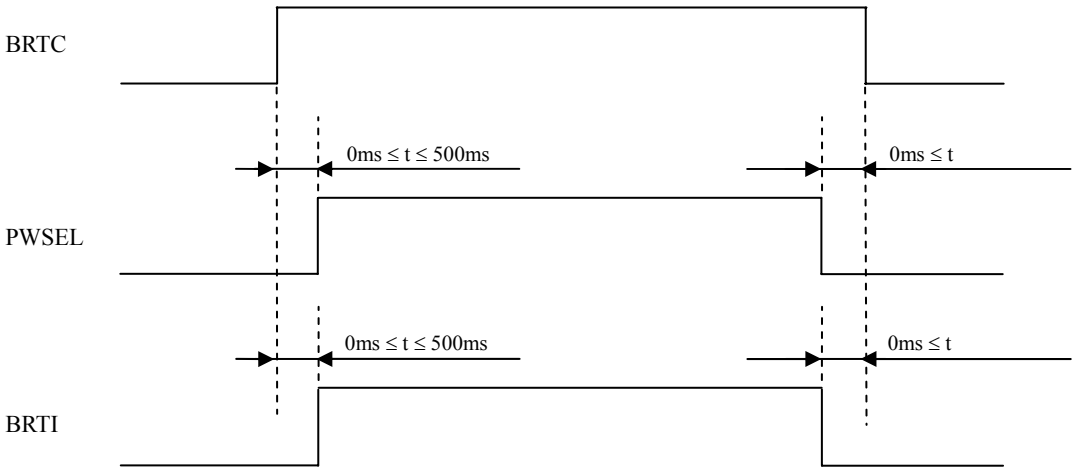

Note1: When VDDB is ON and BRTC is high, voltage to BRTI, BRTP and PWSEL terminals should be applied.

4.6.3 Detail of BRTP timing

(1) Timing diagrams

• Outline chart

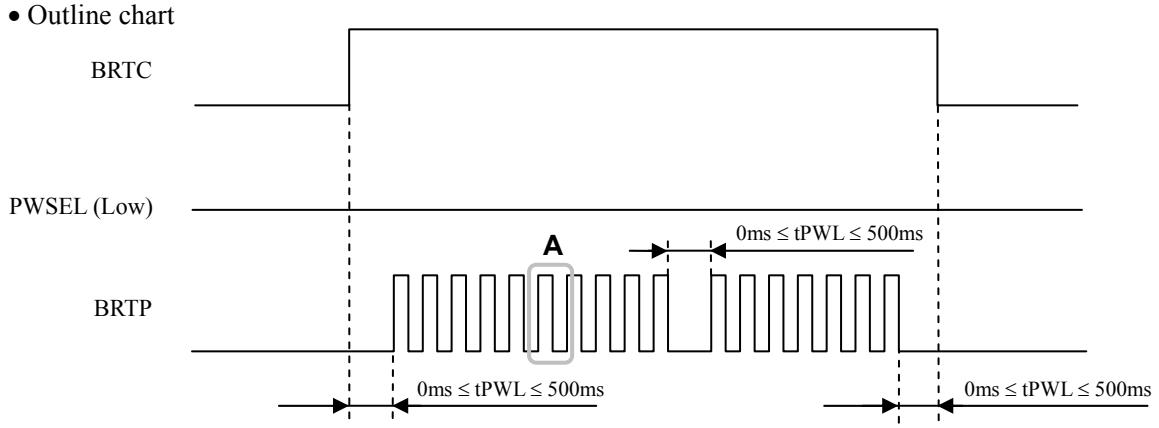

• Detail of **A** part

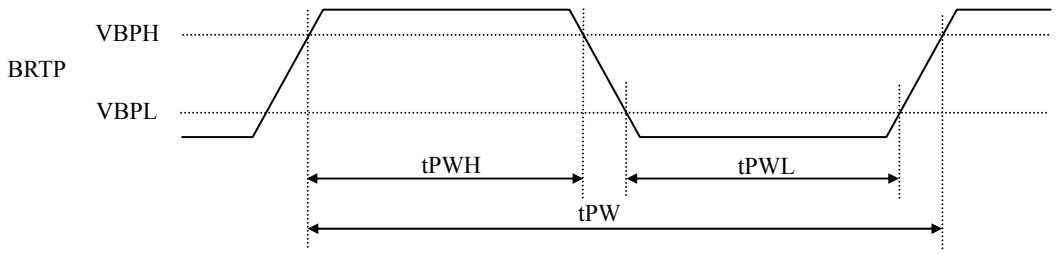

(2) Each parameter

Parameter	Symbol	min.	typ.	max.	Unit	Remarks
Luminance control frequency	FL	185	-	325	Hz	Note1, Note2
Duty ratio	DL	0.2	-	1.0	-	Note1, Note3
Low period	tPWL	0	-	500	ms	Note4

Note1: Definition of parameters is as follows.

$$FL = \frac{1}{tPW} \quad DL = \frac{tPWH}{tPW}$$

Note2: See the following formula for luminance control frequency.
Luminance control frequency = 1/tv × (n+0.25) [or (n + 0.75)]
n = 1, 2, 3 · · · · · ·
tv: Vertical cycle (See "**4.9.1 Timing characteristics**".)

The interference noise of luminance control frequency and input signal frequency for LCD panel signal processing board may appear on a display. Set up luminance control frequency so that the interference noise does not appear!

Note3: See "**4.6.1 Luminance control methods**".
Note4: If tPWL is more than 500ms, the backlight will be turned off by a protection circuit for inverter. The inverter will start to work when power is supplied again.
Note5: When VDDB is ON and BRTC is high, voltage to BRTI, BRTP and PWSEL terminals should be applied.

4.7 LVDS DATA INPUT MAP

4.7.1 Mode A

☆

Input data	Note1		Transmitter Pin	THC63LVDF83A		Pin	THC63LVD823	Note2		CN1 Pin	Symbol
Odd pixel data and control signal	RA2	→	51	TA0		53	R12				
	RA3	→	52	TA1		54	R13	TA1-	→	1	DA0-
	RA4	→	54	TA2		57	R14	TA1+	→	2	DA0+
	RA5	→	55	TA3		58	R15				
	RA6	→	56	TA4		59	R16	TB1-	→	3	DA1-
	RA7	→	3	TA5		60	R17	TB1+	→	4	DA1+
	GA2	→	4	TA6		63	G12				
	GA3	→	6	TB0		64	G13	TC1-	→	5	DA2-
	GA4	→	7	TB1		65	G14	TC1+	→	6	DA2+
	GA5	→	11	TB2		66	G15			7	GND
	GA6	→	12	TB3		67	G16	TCLK1-	→	8	CKA-
	GA7	→	14	TB4		68	G17	TCLK1+	→	9	CKA+
	BA2	→	15	TB5		73	B12				
	BA3	→	19	TB6		74	B13	TD1-	→	10	DA3-
	BA4	→	20	TC0	1st	75	B14	TD1+	→	11	DA3+
	BA5	→	22	TC1		76	B15				
	BA6	→	23	TC2		77	B16				
	BA7	→	24	TC3		78	B17				
	Note3 RSVD	→	27	TC4		7	RSVD				
	Note3 RSVD	→	28	TC5		8	RSVD				
	DE	→	30	TC6		9	DE				
	RA0	→	50	TD0		51	R10				
	RA1	→	2	TD1		52	R11				
	GA0	→	8	TD2		61	G10				
	GA1	→	10	TD3		62	G11				
	BA0	→	16	TD4		69	B10				
	BA1	→	18	TD5		70	B11				
	Note3 RSVD	→	25	TD6		-					
	CLK	→	31	CLKIN		10	CLK				
Even pixel data	RB2	→	51	TA0		81	R22				
	RB3	→	52	TA1		82	R23	TA2-	→	12	DB0-
	RB4	→	54	TA2		83	R24	TA2+	→	13	DB0+
	RB5	→	55	TA3		84	R25			14	GND
	RB6	→	56	TA4		85	R26	TB2-	→	15	DB1-
	RB7	→	3	TA5		86	R27	TB2+	→	16	DB1+
	GB2	→	4	TA6		91	G22			17	GND
	GB3	→	6	TB0		92	G23	TC2-	→	18	DB2-
	GB4	→	7	TB1		93	G24	TC2+	→	19	DB2+
	GB5	→	11	TB2		94	G25				
	GB6	→	12	TB3		95	G26	TCLK2-	→	20	CKB-
	GB7	→	14	TB4		96	G27	TCLK2+	→	21	CKB+
	BB2	→	15	TB5		99	B22				
	BB3	→	19	TB6		100	B23	TD2-	→	22	DB3-
	BB4	→	20	TC0	2nd	1	B24	TD2+	→	23	DB3+
	BB5	→	22	TC1		2	B25			24	GND
	BB6	→	23	TC2		5	B26			25	TxSEL0
	BB7	→	24	TC3		6	B27			26	TxSEL1
	Note3 RSVD	→	27	TC4		-				27	GND
	Note3 RSVD	→	28	TC5		-				28	VDD
	Note3 RSVD	→	30	TC6		-				29	VDD
	RB0	→	50	TD0		79	R20			30	VDD
	RB1	→	2	TD1		80	R21				
	GB0	→	8	TD2		89	G20				
	GB1	→	10	TD3		90	G21				
	BB0	→	16	TD4		97	B20				
	BB1	→	18	TD5		98	B21				
	Note3 RSVD	→	25	TD6		-					
	CLK	→	31	CLKIN		-					

4.7.2 Mode B ☆

Input data	Note1		Transmitter Pin	DS90CF383, C385		Note2		CN1 Pin	Symbol
Odd pixel data and control signal	RA7	→	51	TXIN0					
	RA6	→	52	TXIN1		TA1-	→	1	DA0-
	RA5	→	54	TXIN2		TA1+	→	2	DA0+
	RA4	→	55	TXIN3					
	RA3	→	56	TXIN4		TB1-	→	3	DA1-
	RA2	→	3	TXIN6		TB1+	→	4	DA1+
	GA7	→	4	TXIN7					
	GA6	→	6	TXIN8		TC1-	→	5	DA2-
	GA5	→	7	TXIN9		TC1+	→	6	DA2+
	GA4	→	11	TXIN12				7	GND
	GA3	→	12	TXIN13		TCLK1-	→	8	CKA-
	GA2	→	14	TXIN14		TCLK1+	→	9	CKA+
	BA7	→	15	TXIN15					
	BA6	→	19	TXIN18		TD1-	→	10	DA3-
	BA5	→	20	TXIN19	1st	TD1+	→	11	DA3+
	BA4	→	22	TXIN20					
	BA3	→	23	TXIN21					
	BA2	→	24	TXIN22					
Note3	RSVD	→	27	TXIN24					
Note3	RSVD	→	28	TXIN25					
	DE	→	30	TXIN26					
	RA1	→	50	TXIN27					
	RA0	→	2	TXIN5					
	GA1	→	8	TXIN10					
	GA0	→	10	TXIN11					
	BA1	→	16	TXIN16					
	BA0	→	18	TXIN17					
Note3	RSVD	→	25	TXIN23					
	CLK	→	31	CLKIN					
Even pixel data	RB7	→	51	TXIN0					
	RB6	→	52	TXIN1		TA2-	→	12	DB0-
	RB5	→	54	TXIN2		TA2+	→	13	DB0+
	RB4	→	55	TXIN3				14	GND
	RB3	→	56	TXIN4		TB2-	→	15	DB1-
	RB2	→	3	TXIN6		TB2+	→	16	DB1+
	GB7	→	4	TXIN7				17	GND
	GB6	→	6	TXIN8		TC2-	→	18	DB2-
	GB5	→	7	TXIN9		TC2+	→	19	DB2+
	GB4	→	11	TXIN12					
	GB3	→	12	TXIN13		TCLK2-	→	20	CKB-
	GB2	→	14	TXIN14		TCLK2+	→	21	CKB+
	BB7	→	15	TXIN15					
	BB6	→	19	TXIN18		TD2-	→	22	DB3-
	BB5	→	20	TXIN19	2nd	TD2+	→	23	DB3+
	BB4	→	22	TXIN20				24	GND
	BB3	→	23	TXIN21				25	TxSEL0
	BB2	→	24	TXIN22				26	TxSEL1
Note3	RSVD	→	27	TXIN24				27	GND
Note3	RSVD	→	28	TXIN25				28	VDD
Note3	RSVD	→	30	TXIN26				29	VDD
	RB1	→	50	TXIN27				30	VDD
	RB0	→	2	TXIN5					
	GB1	→	8	TXIN10					
	GB0	→	10	TXIN11					
	BB1	→	16	TXIN16					
	BB0	→	18	TXIN17					
Note3	RSVD	→	25	TXIN23					
	CLK	→	31	CLKIN					

4.7.3 Mode C ☆

Input data	Note1		Transmitter Pin	DS90CF383, C385		Note2		CN1 Pin	Symbol
Odd pixel data and control signal	RA0	→	51	TXIN0					
	RA1	→	52	TXIN1		TA1-	→	1	DA0-
	RA2	→	54	TXIN2		TA1+	→	2	DA0+
	RA3	→	55	TXIN3					
	RA4	→	56	TXIN4		TB1-	→	3	DA1-
	RA5	→	3	TXIN6		TB1+	→	4	DA1+
	GA0	→	4	TXIN7					
	GA1	→	6	TXIN8		TC1-	→	5	DA2-
	GA2	→	7	TXIN9		TC1+	→	6	DA2+
	GA3	→	11	TXIN12				7	GND
	GA4	→	12	TXIN13		TCLK1-	→	8	CKA-
	GA5	→	14	TXIN14		TCLK1+	→	9	CKA+
	BA0	→	15	TXIN15					
	BA1	→	19	TXIN18		TD1-	→	10	DA3-
	BA2	→	20	TXIN19	1st	TD1+	→	11	DA3+
	BA3	→	22	TXIN20					
	BA4	→	23	TXIN21					
	BA5	→	24	TXIN22					
	Note3 RSVD	→	27	TXIN24					
	Note3 RSVD	→	28	TXIN25					
	DE	→	30	TXIN26					
	RA6	→	50	TXIN27					
	RA7	→	2	TXIN5					
	GA6	→	8	TXIN10					
	GA7	→	10	TXIN11					
	BA6	→	16	TXIN16					
	BA7	→	18	TXIN17					
	Note3 RSVD	→	25	TXIN23					
	CLK	→	31	CLKIN					
Even pixel data	RB0	→	51	TXIN0					
	RB1	→	52	TXIN1		TA2-	→	12	DB0-
	RB2	→	54	TXIN2		TA2+	→	13	DB0+
	RB3	→	55	TXIN3				14	GND
	RB4	→	56	TXIN4		TB2-	→	15	DB1-
	RB5	→	3	TXIN6		TB2+	→	16	DB1+
	GB0	→	4	TXIN7				17	GND
	GB1	→	6	TXIN8		TC2-	→	18	DB2-
	GB2	→	7	TXIN9		TC2+	→	19	DB2+
	GB3	→	11	TXIN12					
	GB4	→	12	TXIN13		TCLK2-	→	20	CKB-
	GB5	→	14	TXIN14		TCLK2+	→	21	CKB+
	BB0	→	15	TXIN15					
	BB1	→	19	TXIN18		TD2-	→	22	DB3-
	BB2	→	20	TXIN19	2nd	TD2+	→	23	DB3+
	BB3	→	22	TXIN20				24	GND
	BB4	→	23	TXIN21				25	TxSEL0
	BB5	→	24	TXIN22				26	TxSEL1
	Note3 RSVD	→	27	TXIN24				27	GND
	Note3 RSVD	→	28	TXIN25				28	VDD
	Note3 RSVD	→	30	TXIN26				29	VDD
	RB6	→	50	TXIN27				30	VDD
	RB7	→	2	TXIN5					
	GB6	→	8	TXIN10					
	GB7	→	10	TXIN11					
	BB6	→	16	TXIN16					
	BB7	→	18	TXIN17					
	Note3 RSVD	→	25	TXIN23					
	CLK	→	31	CLKIN					

Note1: LSB (Least Significant Bit) – RA0, GA0, BA0, RB0, GB0, BB0
MSB (Most Significant Bit) – RA7, GA7, BA7, RB7, GB7, BB7

Note2: Twist pair wires with 100Ω (Characteristic impedance) should be used between LCD panel signal processing board and LVDS transmitter.

Note3: Input signal RSVD is not used inside the product, but do not keep pin open to avoid noise problem.

4.8 DISPLAY COLORS AND INPUT DATA SIGNALS

This product can display in equivalent to 16,777,216 colors in 256 gray scales in each RGB sub-pixel. Also the relation between display colors and input data signals is as the following table.

Display colors		Data signal (0: Low level, 1: High level)																							
		RA7	RA6	RA5	RA4	RA3	RA2	RA1	RA0	GA7	GA6	GA5	GA4	GA3	GA2	GA1	GA0	BA7	BA6	BA5	BA4	BA3	BA2	BA1	BA0
		RB7	RB6	RB5	RB4	RB3	RB2	RB1	RB0	GB7	GB6	GB5	GB4	GB3	GB2	GB1	GB0	BB7	BB6	BB5	BB4	BB3	BB2	BB1	BB0
Basic Colors	Black	0	0	0	0	0	0	0	0	0	0	0	0	0	0	0	0	0	0	0	0	0	0	0	0
	Blue	0	0	0	0	0	0	0	0	0	0	0	0	0	0	0	0	1	1	1	1	1	1	1	1
	Red	1	1	1	1	1	1	1	1	0	0	0	0	0	0	0	0	0	0	0	0	0	0	0	0
	Magenta	1	1	1	1	1	1	1	1	0	0	0	0	0	0	0	0	1	1	1	1	1	1	1	1
	Green	0	0	0	0	0	0	0	0	1	1	1	1	1	1	1	1	0	0	0	0	0	0	0	0
	Cyan	0	0	0	0	0	0	0	0	1	1	1	1	1	1	1	1	1	1	1	1	1	1	1	1
	Yellow	1	1	1	1	1	1	1	1	1	1	1	1	1	1	1	1	0	0	0	0	0	0	0	0
	White	1	1	1	1	1	1	1	1	1	1	1	1	1	1	1	1	1	1	1	1	1	1	1	1
Red gray scale	Black	0	0	0	0	0	0	0	0	0	0	0	0	0	0	0	0	0	0	0	0	0	0	0	0
		0	0	0	0	0	0	0	1	0	0	0	0	0	0	0	0	0	0	0	0	0	0	0	0
	dark	0	0	0	0	0	0	1	0	0	0	0	0	0	0	0	0	0	0	0	0	0	0	0	0
	↑					:								:								:			
	↓					:								:								:			
	bright	1	1	1	1	1	1	0	1	0	0	0	0	0	0	0	0	0	0	0	0	0	0	0	0
		1	1	1	1	1	1	1	0	0	0	0	0	0	0	0	0	0	0	0	0	0	0	0	0
	Red	1	1	1	1	1	1	1	1	0	0	0	0	0	0	0	0	0	0	0	0	0	0	0	0
Green gray scale	Black	0	0	0	0	0	0	0	0	0	0	0	0	0	0	0	0	0	0	0	0	0	0	0	0
		0	0	0	0	0	0	0	0	0	0	0	0	0	0	0	1	0	0	0	0	0	0	0	0
	dark	0	0	0	0	0	0	0	0	0	0	0	0	0	0	1	0	0	0	0	0	0	0	0	0
	↑					:								:								:			
	↓					:								:								:			
	bright	0	0	0	0	0	0	0	0	1	1	1	1	1	1	0	1	0	0	0	0	0	0	0	0
		0	0	0	0	0	0	0	0	1	1	1	1	1	1	1	0	0	0	0	0	0	0	0	0
	Green	0	0	0	0	0	0	0	0	1	1	1	1	1	1	1	1	0	0	0	0	0	0	0	0
Blue gray scale	Black	0	0	0	0	0	0	0	0	0	0	0	0	0	0	0	0	0	0	0	0	0	0	0	0
		0	0	0	0	0	0	0	0	0	0	0	0	0	0	0	0	0	0	0	0	0	0	0	1
	dark	0	0	0	0	0	0	0	0	0	0	0	0	0	0	0	0	0	0	0	0	0	0	1	0
	↑					:								:								:			
	↓					:								:								:			
	bright	0	0	0	0	0	0	0	0	0	0	0	0	0	0	0	0	1	1	1	1	1	1	0	1
		0	0	0	0	0	0	0	0	0	0	0	0	0	0	0	0	1	1	1	1	1	1	1	0
	Blue	0	0	0	0	0	0	0	0	0	0	0	0	0	0	0	0	1	1	1	1	1	1	1	1

4.9 INPUT SIGNAL TIMINGS

4.9.1 Timing characteristics

Parameter		Symbol	min.	typ.	max.	Unit	Remarks
CLK	Frequency	1/ tc	60.0	64.5	65.0	MHz	LVDS transmitter input
	Pulse width	tc	15.38	15.5	-	ns	
	Duty	-	See the data sheet of LVDS transmitter.			-	-
	Rise, fall	-				ns	
Horizontal	Cycle	th	13.1	13.3	19.2	µs	Note1
			848	860	1,156	CLK	
	Display period	thd	800			CLK	-
Vertical	Cycle	1/tv	59	60	61	Hz	-
		tv	1,206	1,250	-	H	
	Display period	tvd	1,200			H	-
DE, DATA	Setup time	-	See the data sheet of LVDS transmitter.			ns	-
	Hold time	-				ns	
	Rise, fall	-				ns	

Note1: During operation, fluctuation of horizontal cycle should be within ±1 CLK.

4.9.2 Input signal timing chart

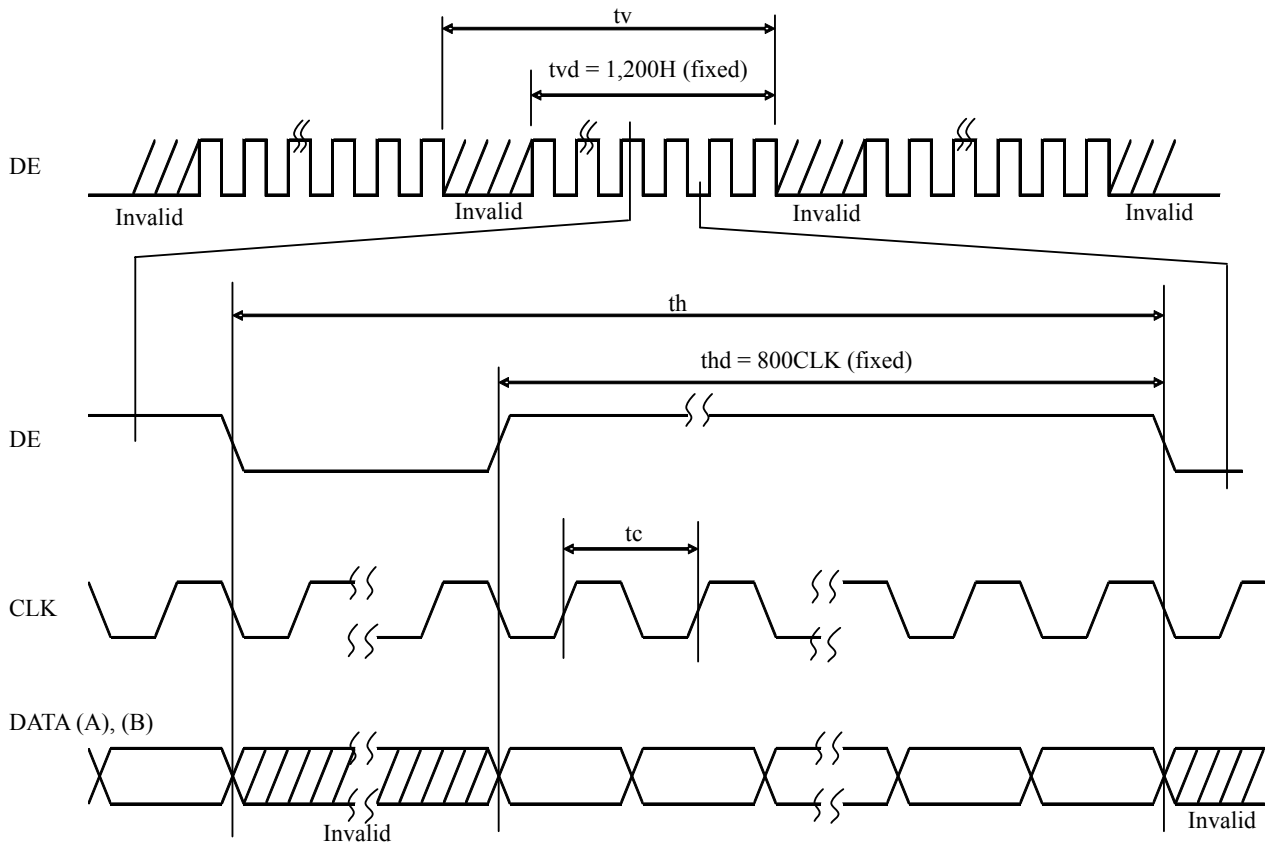

4.10 DISPLAY POSITIONS

Even pixel: RA= Red data
GA= Green data
BA= Blue data

Odd pixel: RB= Red data
GB= Green data
BB= Blue data

D (0, 0)			D (1, 0)		
RA	GA	BA	RB	GB	BB

D(0, 0)	D(1, 0)	•••	D(X, 0)	•••	D(1598, 0)	D(1599, 0)
D(0, 1)	D(1, 1)	•••	D(X, 1)	•••	D(1598, 1)	D(1599, 1)
• • •	• • •	• ••• •	• • •	• ••• •	• • •	• ••• •
D(0, Y)	D(1, Y)	•••	D(X, Y)	•••	D(1598, Y)	D(1599, Y)
• • •	• • •	• ••• •	• • •	• ••• •	• • •	• • •
D(0, 1198)	D(1, 1198)	•••	D(X, 1198)	•••	D(1598, 1198)	D(1599, 1198)
D(0, 1199)	D(1, 1199)	•••	D(X, 1199)	•••	D(1598, 1199)	D(1599, 1199)

4.11 TEN-bit LOOK UP TABLE FOR GAMMA ADJUSTMENT

Adjustment of gamma characteristics for each 8-bit RGB data is possible by using built-in 10-bit LUT (look up table) for Gamma characteristics.

The LUT is set with the serial data. The combination of the control command determines the R/W actions.: READ, Random/Sequential Address WRITE and Individual/Simultaneous RGB setting.

The serial data is composed as Table1.

Table1: Serial data Composition

DATA	DATA name	Function	Remarks
D31	CMD5	Control Command	See Table2 and 3.
D30	CMD4	Control Command	
D29	CMD3	Control Command	
D28	CMD2	Control Command	
D27	CMD1	Control Command	
D26	CMD0	Control Command	
D25	ADD9	LUT Address (MSB)	See Table4.
D24	ADD8	LUT Address	
D23	ADD7	LUT Address	
D22	ADD6	LUT Address	
D21	ADD5	LUT Address	
D20	ADD4	LUT Address	
D19	ADD3	LUT Address	
D18	ADD2	LUT Address	
D17	ADD1	LUT Address	
D16	ADD0	LUT Address (LSB)	
D15	Dummy	Dummy Data “0”	See Table5.
D14	Dummy	Dummy Data “0”	
D13	Dummy	Dummy Data “0”	
D12	Dummy	Dummy Data “0”	
D11	Dummy	Dummy Data “0”	
D10	Dummy	Dummy Data “0”	
D9	DATA9	LUT Data (MSB)	
D8	DATA8	LUT Data	
D7	DATA7	LUT Data	
D6	DATA6	LUT Data	
D5	DATA5	LUT Data	
D4	DATA4	LUT Data	
D3	DATA3	LUT Data	
D2	DATA2	LUT Data	
D1	DATA1	LUT Data	
D0	DATA0	LUT Data (LSB)	

Table2: Command table (CMD5 to CMD0: 6-bit)

DATA name	Parameter	Remarks
CMD5	Selection of WRITE/READ mode "1": WRITE mode "0": READ mode	In case of "0", must be set as follows. CMD4: "1", CMD3: "0", CMD2: "1" CMD1: "0", CMD0: "0"
CMD4	Must be set to "1".	-
CMD3	Selection of Random/Sequential Address WRITE "1": Random Address WRITE "0": Sequential Address WRITE	-
CMD2	Must be set to "1".	-
CMD1	Selection of Individual/Simultaneous RGB setting "1": Individual RGB setting "0": Simultaneous RGB setting	"1": Select the color by using ADD9 and ADD8. (See Table4.) "0": ADD9 and ADD8 are invalid.
CMD0	Must be set to "0".	-

Table3: Command Combination table (CMD5 to CMD0: 6-bit)

CMD5	CMD4	CMD3	CMD2	CMD1	CMD0	Mode
1	1	1	1	1	0	Random Address WRITE, Individual RGB setting
1	1	1	1	0	0	Random Address WRITE, Simultaneous RGB setting
1	1	0	1	1	0	Sequential Address WRITE, Individual RGB setting
1	1	0	1	0	0	Sequential Address WRITE, Simultaneous RGB setting
0	1	0	1	0	0	READ mode

*Other combinations are prohibited, and may cause function error.

Table4: Address table (ADD9 to ADD0: 10-bit)

DATA name	Parameter	Remarks
ADD9	Sub-pixel selection ADD[9:8]= 0:0 Red 0:1 Green 1:0 Blue 1:1 ON/OFF selection of Gamma Correction	When "ADD[9:8]=1:1", ON/OFF of Gamma correction can select according to the GMA[2:0]. (See Table6 and Table7.)
ADD8		
ADD7	LUT Address 256 address = 00h - FFh	When ADD[9:8] = 1:1, ADD[7:0] must be set to 00h.
ADD6		
ADD5		
ADD4		
ADD3		
ADD2		
ADD1		
ADD0		

Table5: Data table (DATA15 to DATA0: 16-bit)

DATA	DATA name	Parameter	Remarks
DATA15	Dummy	Dummy Data Must be set to "0".	-
DATA14	Dummy		
DATA13	Dummy		
DATA12	Dummy		
DATA11	Dummy		
DATA10	Dummy		
DATA9	DATA9	[MSB]	-
DATA8	DATA8		
DATA7	DATA7		
DATA6	DATA6		
DATA5	DATA5	10-bit LUT Data 000h - 3FFh	
DATA4	DATA4		
DATA3	DATA3		
DATA2	DATA2		
DATA1	DATA1		
DATA0	DATA0	[LSB]	

Table6: Gamma correction table (DATA15 to DATA0: 16bit)

DATA	DATA name	Parameter	Remarks
DATA15	Dummy	Dummy Data Must be set to "0".	-
DATA14	Dummy		
DATA13	Dummy		
DATA12	Dummy		
DATA11	Dummy		
DATA10	Dummy		
DATA9	Dummy		
DATA8	Dummy		
DATA7	Dummy		
DATA6	Dummy		
DATA5	Dummy		
DATA4	Dummy		
DATA3	Dummy		
DATA2	GMA2	[MSB]	See Table7.
DATA1	GMA1	GMA Data	
DATA0	GMA0	[LSB]	

Table7: Control code GMA[2:0]

GMA2	GMA1	GMA0	Function
0	0	0	No correction (Initial setting)
0	0	1	Correction according to the LUT Data. Note1

*Other combinations are prohibited, and may cause function error.

Note1: Initial setting of the LUT is undefined data. The LUT should be enabled by setting of the GMA after writing the LUT data in all the 256 addresses, in order to avoid undefined data display.

Note2: Transfer the data every power-on, because the LUT data isn't stored in the LCD module.

Note3: As writing and reading the LUT data, a noise may appear on the display image. In order to prevent the noise appearing on the display, following measures should be performed.

(1)The LUT data should be rewritten during invalid period of pixel data (See "**4.9 INPUT SIGNAL TIMINGS**".).

(2) The LUT data should be rewritten when the Gamma Correction is OFF (GMA[2:0] = 000).

4.12 LUT SERIAL COMMUCATION TIMINGS

4.12.1 Timing Chart

(1) READ Timing Chart

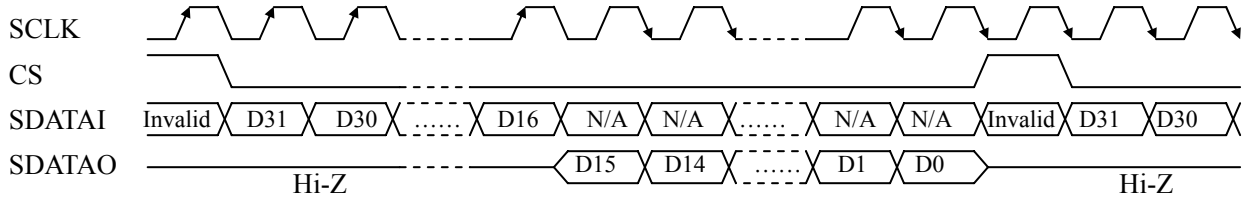

(2) Random Address WRITE Timing Chart

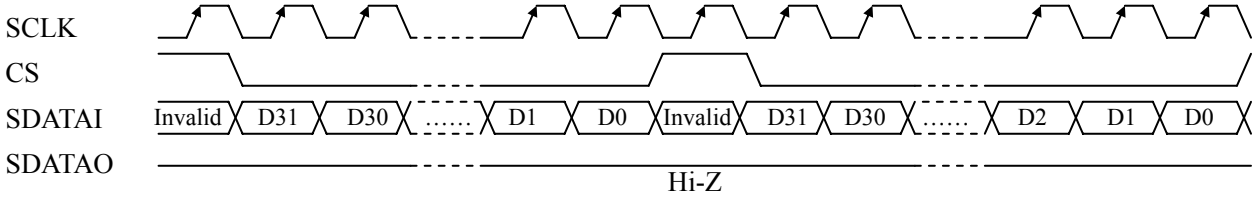

(3) Sequential Address WRITE Timing Chart

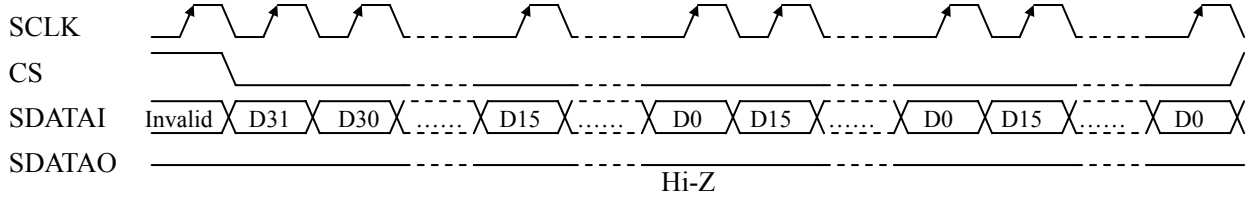

4.12.2 Timing specifications

Parameter	Symbol	min.	typ.	max.	Unit	Remarks
SCLK Frequency	1/Tsck	-	-	5	MHz	-
SCLK Pulse Width (WRITE)	Twsck	50	-	-	ns	-
SCLK Pulse Width (READ)	Twsck	5	-	-	tc	Note1
SDATI-SCLK Setup Time	Tds	50	-	-	ns	-
SDATI-SCLK Hold Time	Tdh	50	-	-	ns	-
CS-SCLK Setup Time	Tcs	50	-	-	ns	-
CS-SCLK Hold Time	Tch	50	-	-	ns	-

Note1: At the READ of the serial communication mode, the SCLK Pulse Width (Twsck) must be greater than 5CLK (5 tc's). (See "**4.9.1 Timing characteristics**".)

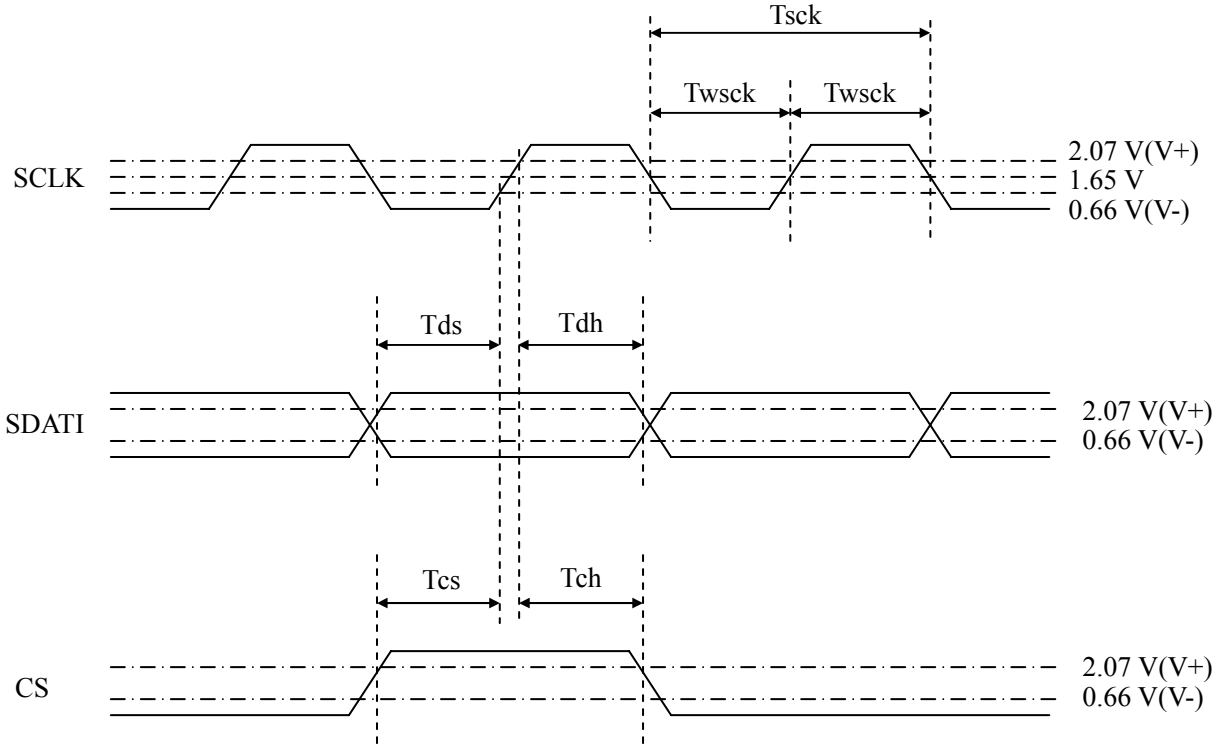

Note2: During the serial communication mode, the display noise may appear because of rewriting the data. To avoid this, rewrite the LUT data when the pixel data is invalid or the Gamma Correction is OFF (GMA[2:0] = 000). The external noise may cause the data change, refresh the data regularly according to need.

4.13 OPTICS

4.13.1 Optical characteristics

(Note1, Note2, Note3)

Parameter		Condition	Symbol	min.	typ.	max.	Unit	Measuring instrument	Remarks
Luminance		White at center θR = 0°, θL = 0°, θU = 0°, θD = 0°	L	650	860	-	cd/m^2	BM-5A or SR-3	-
Contrast ratio		White/Black at center θR = 0°, θL = 0°, θU = 0°, θD = 0°	CR	800	1050	-	-	BM-5A or SR-3	Note4
Luminance uniformity		White θR = 0°, θL = 0°, θU = 0°, θD = 0°	LU	75	-	-	%	BM-5A or SR-3	Note5
Chromaticity	White	**x** coordinate	Wx	0.293	0.313	0.333	-	SR-3	Note6
		y coordinate	Wy	0.309	0.329	0.349	-		
	Red	**x** coordinate	Rx	-	0.650	-			
		y coordinate	Ry	-	0.330	-			
	Green	**x** coordinate	Gx	-	0.290	-			
		y coordinate	Gy	-	0.610	-			
	Blue	**x** coordinate	Bx	-	0.150	-			
		y coordinate	By	-	0.060	-			
Color gamut		θR = 0°, θL = 0°, θU = 0°, θD = 0° at center, against NTSC color space	C	65	72	-	%	SR-3	-
Response time		Black to White	Ton	-	18	26	ms	BM-5A	Nore7
		White to Black	Toff	-	17	24	ms		
Viewing angle	Right	θU = 0°, θD = 0°, CR ≥ 10	θR	70	88	-	°	EZ Contrast	Note8
	Left	θU = 0°, θD = 0°, CR ≥ 10	θL	70	88	-	°		
	Up	θR = 0°, θL = 0°, CR ≥ 10	θU	70	88	-	°		
	Down	θR = 0°, θL = 0°, CR ≥ 10	θD	70	88	-	°		

Note1: These are initial characteristics.
Note2: Measurement conditions are as follows.
Ta = 25°C, VDD = 12.0V, VDDB = 24.0V, Display mode: UXGA,
Horizontal cycle = 1/75.19 kHz, Vertical cycle = 1/60.0Hz

Optical characteristics are measured after 20 minutes from working the product, in the dark room. Also measurement methods are as follows.

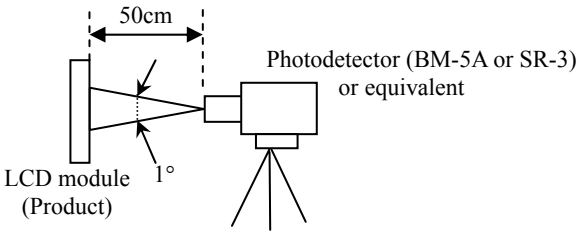

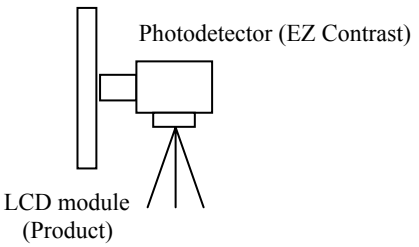

Note3: TopF=40°C (Center of LCD panel surface at the maximum luminance)
Note4: See "**4.13.2 Definition of contrast ratio**".
Note5: See "**4.13.3 Definition of luminance uniformity**".
Note6: These coordinates are found on CIE 1931 chromaticity diagram.
Note7: See "**4.13.4 Definition of response times**".
Note8: See "**4.13.5 Definition of viewing angles**".

4.13.2 Definition of contrast ratio

The contrast ratio is calculated by using the following formula.

$$\text{Contrast ratio (CR)} = \frac{\text{Luminance of white screen}}{\text{Luminance of black screen}}$$

4.13.3 Definition of luminance uniformity

The luminance uniformity is calculated by using following formula.

$$\text{Luminance uniformity (LU)} = \frac{\text{Minimum luminance from ① to ⑤}}{\text{Maximum luminance from ① to ⑤}}$$

The luminance is measured at near the 5 points shown below.

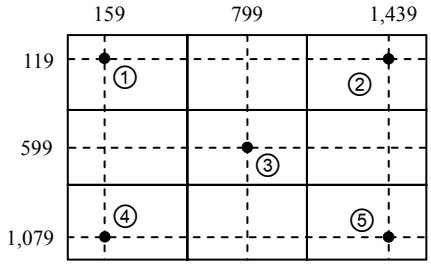

4.13.4 Definition of response times

Response time is measured, the luminance changes from "black" to "white", or "white" to "black" on the same screen point, by photo-detector. Ton is the time it takes the luminance change from 10% up to 90%. Also Toff is the time it takes the luminance change from 90% down to 10% (See the following diagram.).

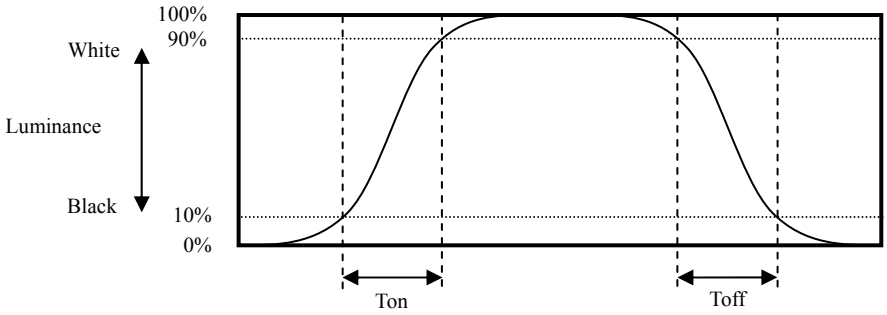

4.13.5 Definition of viewing angles

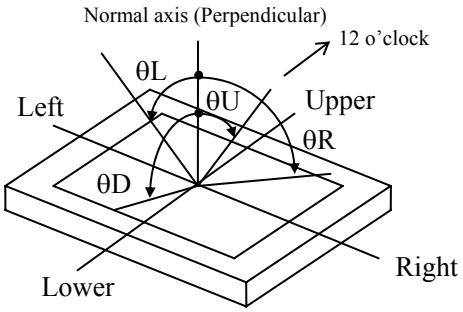

5. RELIABILITY TESTS

Test item		Condition	Judgment Note1
High temperature and humidity (Operation)		① 60 ± 2°C, RH = 60%, 500hours ② Display data is white. Note2	No display malfunctions
Heat cycle (Operation)		① 0 ± 3°C…1hour 55 ± 3°C…1hour ② 50cycles, 4hours/cycle ③ Display data is white. Note2	
Thermal shock (Non operation)		① -20 ± 3°C…30minutes 60 ± 3°C…30minutes ② 100cycles, 1hour/cycle ③ Temperature transition time is within 5 minutes.	
Vibration (Non operation)		① 5 to 100Hz, 11.76m/s^2 ② 1 minute/cycle ③ X, Y, Z directions ④ 10 times each directions	No display malfunctions No physical damages
Mechanical shock (Non operation)		① 294m/s^2, 11ms ② X, Y, Z directions ③ 3 times each directions	
ESD (Operation)		① 150pF, 150Ω, ±10kV ② 9 places on a panel surface Note3 ③ 10 times each places at 1 sec interval	No display malfunctions
Dust (Operation)		① Sample dust: No.15 (by JIS-Z8901) ② 15 seconds stir 8 times repeat at 1 hour interval Note2	
Low pressure	Non-operation	① 15 kPa (Equivalent to altitude 13,600m) ② -20°C±3°C…24 hours ③ +60°C±3°C…24 hours	No display malfunctions
	Operation	① 53.3 kPa (Equivalent to altitude 4,850m) ② 0°C±3°C…24 hours ③ +55°C±3°C…24 hours Note2	

Note1: Display and appearance are checked under environmental conditions equivalent to the inspection conditions of defect criteria.
Note2: Luminance: 500cd/m^2 at luminance control.
Note3: See the following figure for discharge points

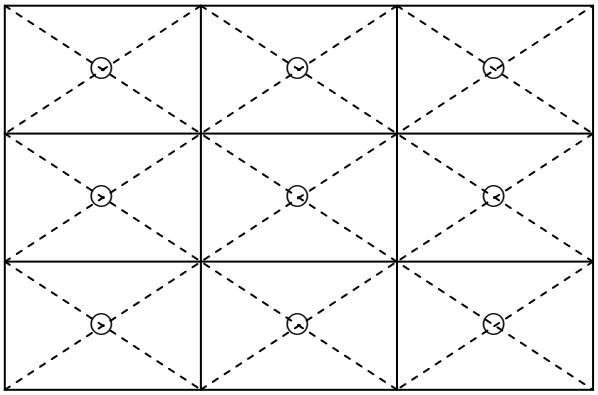

6. PRECAUTIONS

6.1 MEANING OF CAUTION SIGNS

The following caution signs have very important meaning. **Be sure to read "6.2 CAUTIONS" and "6.3 ATTENTIONS", after understanding these contents!**

⚠	This sign has the meaning that customer will be injured by himself or the product will sustain a damage, if customer has wrong operations.
⚡	This sign has the meaning that customer will get an electrical shock, if customer has wrong operations.
✋	This sign has the meaning that customer will be injured by himself, if customer has wrong operations.

6.2 CAUTIONS

⚡

∗ Do not touch the working backlight. There is a danger of an electric shock.

✋

∗ Do not touch the working backlight . There is a danger of burn injury.
∗ Do not shock and press the LCD panel and the backlight! There is a danger of breaking, because they are made of glass. (Shock: To be not greater 294m/s^2 and to be not greater 11ms, Pressure: To be not greater 19.6N (ϕ16mm jig))

6.3 ATTENTIONS ⚠

6.3.1 Handling of the product

① Take hold of both ends without touching the circuit board when the product (LCD module) is picked up from inner packing box to avoid broken down or misadjustment, because of stress to mounting parts on the circuit board.
② Do not hook nor pull cables such as lamp cable, and so on, in order to avoid any damage.
③ When the product is put on the table temporarily, display surface must be placed downward.
④ When handling the product, take the measures of electrostatic discharge with such as earth band, ionic shower and so on, because the product may be damaged by electrostatic.
⑤ The torque for product mounting screws must never exceed 0.735 N·m. Higher torque might result in distortion of the bezel. And the length of product mounting screws must be ≤ 4.7mm.

⑥ The product must be installed using mounting holes without undue stress such as bends or twist (See outline drawings). And do not add undue stress to any portion (such as bezel flat area). Bends or twist described above and undue stress to any portion may cause display mura.

Recommended installing method: Ideal plane "A" is defined by one mounting hole (datum point) and other mounting holes. The ideal plane "A" should be the same plane within ±0.3 mm.

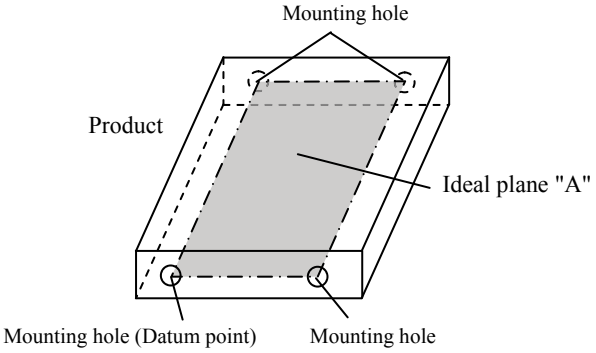

⑦ Do not press or rub on the sensitive product surface. When cleaning the product surface, use of the cloth with ethanolic liquid such as screen cleaner for LCD is recommended.
⑧ Do not push nor pull the interface connectors while the product is working.
⑨ When handling the product, use of an original protection sheet on the product surface (polarizer) is recommended for protection of product surface. Adhesive type protection sheet may change color or characteristics of the polarizer.
⑩ Usually liquid crystals don't leak through the breakage of glasses because of the surface tension of thin layer and the construction of LCD panel. But, if you contact with liquid crystal for the worst, please wash it out with soap.

6.3.2 Environment

① Do not operate or store in high temperature, high humidity, dewdrop atmosphere or corrosive gases. Keep the product in packing box with antistatic pouch in room temperature to avoid dusts and sunlight, when storing the product.
② In order to prevent dew condensation occurring by temperature difference, the product packing box should be opened after enough time being left under the environment of an unpacking room. Evaluate the leaving time sufficiently because a situation of dew condensation occurring is changed by the environmental temperature and humidity. (Recommended leaving time: 6 hours or more with packing state)
③ Do not operate in high magnetic field. Circuit boards may be broken down by it.
④ This product is not designed as radiation hardened.

6.3.3 Characteristics

The following items are neither defects nor failures.

① Response time, luminance and color may be changed by ambient temperature.
② Display mura, flicker, vertical seam or small spot may be observed depending on display patterns.
③ Optical characteristics (e.g. luminance, display uniformity, etc.) gradually is going to change depending on operating time, and especially low temperature, because the LCD has cold cathode fluorescent lamps.
④ Do not display the fixed pattern for a long time because it may cause image sticking. Use a screen saver, if the fixed pattern is displayed on the screen.
⑤ The display color may be changed depending on viewing angle because of the use of condenser sheet in the backlight.
⑥ Optical characteristics may be changed depending on input signal timings.
⑦ The interference noise between input signal frequency for this product's signal processing board and luminance control frequency of the inverter may appear on a display. Set up luminance control frequency of the inverter so that the interference noise does not appear.
⑧ After the product is stored under condition of low temperature or dark place for a long time, the cold cathode fluorescent lamp may not be turned on under the same condition because of the general characteristic of cold cathode fluorescent lamp. In addition, when Luminance control ratio is low in pulse width modulation method inverter, the lamp may not be turned on. In this case, power should be supplied again.

6.3.4 Other

① All VDD, VDDB, GND and GNDB terminals should be used without any non-connected lines.
② Do not disassemble a product or adjust variable resistors.
③ See “REPLACEMENT MANUAL FOR INVERTER”, when replacing the inverter.
④ Pack the product with original shipping package, in order to avoid any damages during transportation, when returning the product to NEC for repair and so on.
⑤ The LCD module by itself or integrated into end product should be packed and transported with display in the vertical position. Otherwise the display characteristics may be degraded.
⑥ The information of China RoHS directive six hazardous substances or elements in this product is as follows.

China RoHS directive six hazardous substances or elements					
Lead (Pb)	Mercury (Hg)	Cadmium (Cd)	Hexavalent Chromium (Cr VI)	Polybrominated Biphenys (PBB)	Polybrominated Biphenyl Ethers (PBDE)
×	×	○	○	○	○

Note1: ○: This indicates that the poisonous or harmful material in all the homogeneous materials for this part is equal or below the limitation level of SJ/T11363-2006 standard regulation.
×: This indicates that the poisonous or harmful material in all the homogeneous materials for this part is above the limitation level of SJ/T11363-2006 standard regulation.

7. OUTLINE DRAWINGS

7.1 FRONT VIEW

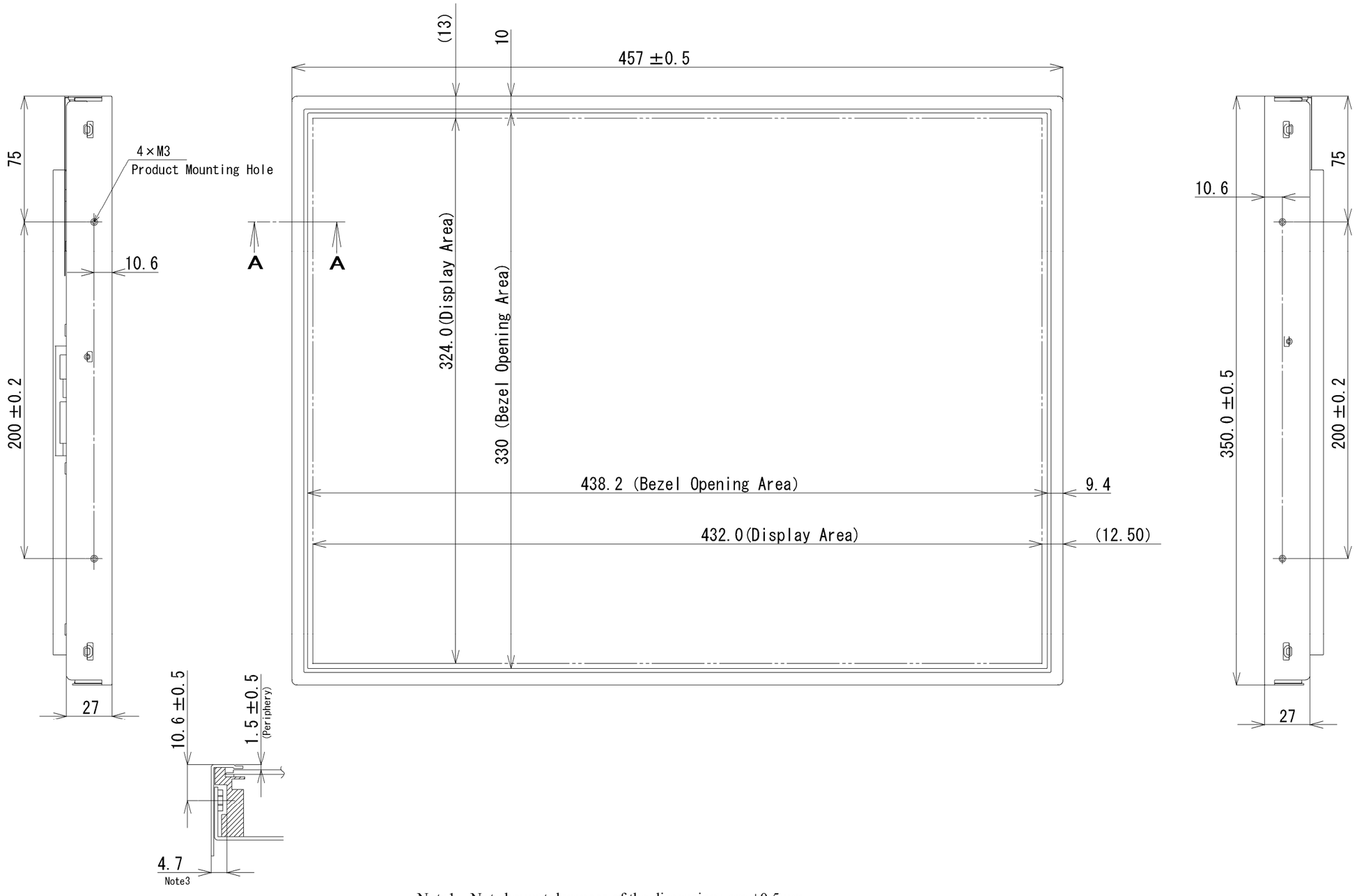

Note1: Not shown tolerances of the dimensions are ±0.5mm.
Note2: The torque for product mounting screws must never exceed 0.735N·m.
Note3: The length of product mounting screws from surface of plate must be ≤ 4.7mm.
Note4: The values in parentheses are for reference.

Unit: mm

7.2 REAR VIEW

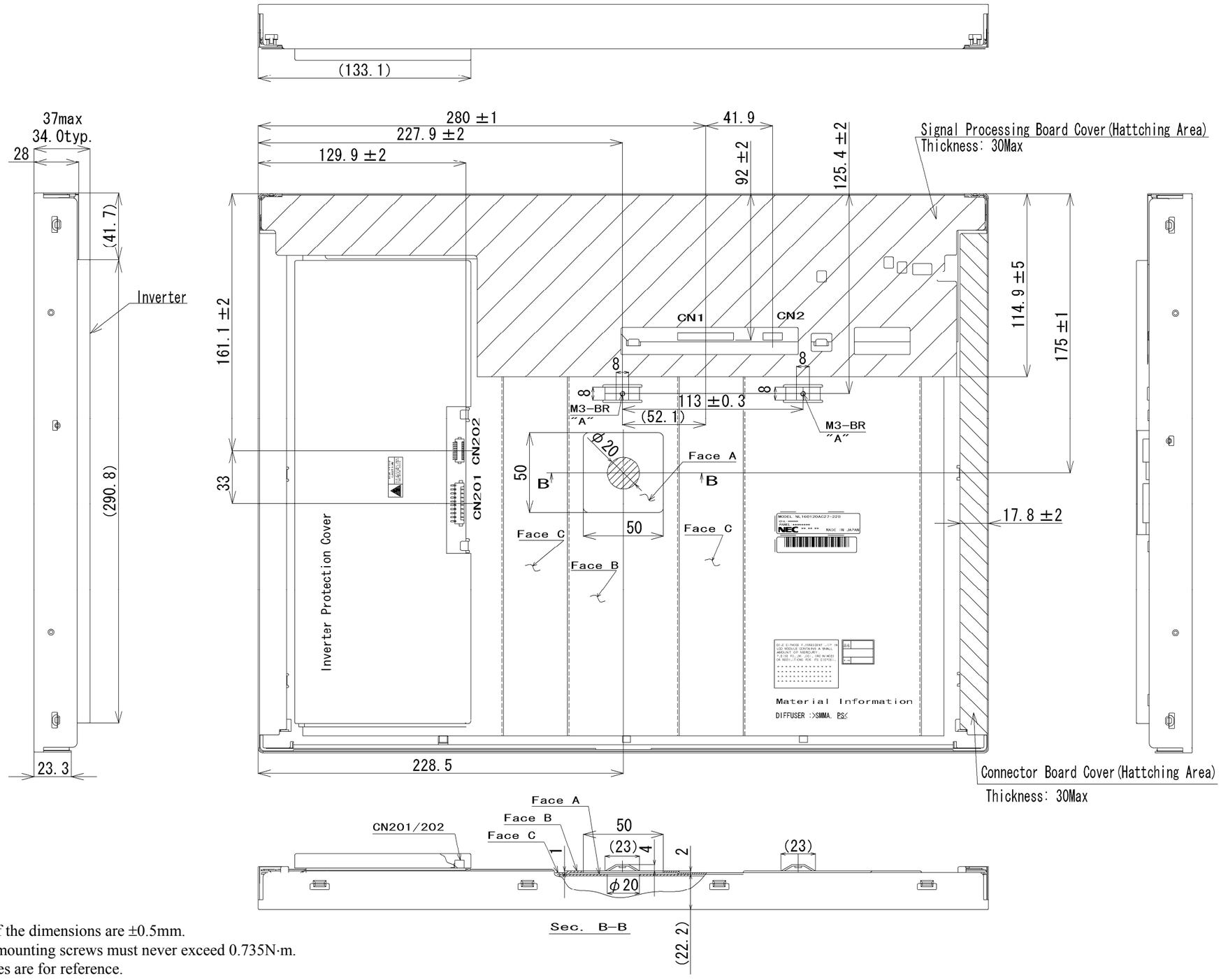

Note1: Not shown tolerances of the dimensions are ±0.5mm.
Note2: The torque for product mounting screws must never exceed 0.735N·m.
Note3: The values in parentheses are for reference.
Note4: The torque for the holes "A" must never exceed 0.44N·m.

Unit: mm