PRELIMINARY

NEC LCD Technologies, Ltd.

TFT COLOR LCD MODULE

NL8060BC21-11C

21cm (8.4 Type)
SVGA
LVDS interface (1port)

PRELIMINARY DATA SHEET

DOD-PP-0909 (2nd edition)

This PRELIMINARY DATA SHEET is updated document from DOD-PP-0708(1)

All information is subject to change without notice. Please confirm the sales representative before starting to design your system.

INTRODUCTION

NEC does and will not assume any liability for infringement of patents, copyrights or other intellectual property rights of any third party arising out of or in connection with application of the products described herein except for that directly attributable to mechanisms and workmanship thereof. No license, express or implied, is granted under any patent, copyright or other intellectual property right of NEC.

Some electronic parts/components would fail or malfunction at a certain rate. In spite of every effort to enhance reliability of products by NEC, the possibility of failures and malfunction might not be avoided entirely. To prevent the risks of damage to death, human bodily injury or other property arising out thereof or in connection therewith, each customer is required to take sufficient measures in its safety designs and plans including, but not limited to, redundant system, fire-containment and anti-failure.

The products are classified into three quality grades: **"Standard"**, **"Special"**, and **"Specific"** of the highest grade of a quality assurance program at the choice of a customer. Each quality grade is designed for applications described below. Any customer who intends to use a product for application other than that of Standard quality grade is required to contact an NEC sales representative in advance.

The **Standard** quality grade applies to the products developed, designed and manufactured in accordance with the NEC standard quality assurance program, which are designed for such application as any failure or malfunction of the products (sets) or parts/components incorporated therein a customer uses are, directly or indirectly, free of any damage to death, human bodily injury or other property, like general electronic devices.

Examples: Computers, office automation equipment, communications equipment, test and measurement equipment, audio and visual equipment, home electronic appliances, machine tools, personal electronic equipment, industrial robots, etc.

The **Special** quality grade applies to the products developed, designed and manufactured in accordance with an NEC quality assurance program stricter than the standard one, which are designed for such application as any failure or malfunction of the products (sets) or parts/components incorporated therein a customer uses might directly cause any damage to death, human bodily injury or other property, or such application under more severe condition than that defined in the Standard quality grade without such direct damage.

Examples: Control systems for transportation equipment (automobiles, trains, ships, etc.), traffic control systems, anti-disaster systems, anti-crime systems, medical equipment not specifically designed for life support, safety equipment, etc.

The **Specific** quality grade applies to the products developed, designed and manufactured in accordance with the standards or quality assurance program designated by a customer who requires an extremely higher level of reliability and quality for such products.

Examples: Military systems, aircraft control equipment, aerospace equipment, nuclear reactor control systems, medical equipment/devices/systems for life support, etc.

The quality grade of this product is the **"Standard"** unless otherwise specified in this document.

CONTENTS

1. OUTLINE

1.1 STRUCTURE AND PRINCIPLE

Color LCD module NL8060BC21-11C is composed of the amorphous silicon thin film transistor liquid crystal display (a-Si TFT LCD) panel structure with driver LSIs for driving the TFT (Thin Film Transistor) array and a backlight.

The a-Si TFT LCD panel structure is injected liquid crystal material into a narrow gap between the TFT array glass substrate and a color-filter glass substrate.

Color (Red, Green, Blue) data signals from a host system (e.g. signal generator, etc.) are modulated into best form for active matrix system by a signal processing board, and sent to the driver LSIs which drive the individual TFT arrays.

The TFT array as an electro-optical switch regulates the amount of transmitted light from the backlight assembly, when it is controlled by data signals. Color images are created by regulating the amount of transmitted light through the TFT array of red, green and blue dots.

1.2 APPLICATION

- For industrial use

1.3 FEATURES

- Adoption of ST-NLT (Super-Transmissive Natural Light TFT)
- High luminance
- High contrast
- Low reflection
- Wide viewing angle
- Wide temperature range
- LVDS interface
- Reversible-scan direction
- Selectable 8bit or 6bit digital signals for data of RGB
- LED backlight type
- Replaceable lamp holder for backlight
- Color Conversion(Tentative name) 2

2. GENERAL SPECIFICATIONS

Display area	170.4 (H) × 127.8 (V) mm	
Diagonal size of display	21cm (8.4 inches)	
Drive system	a-Si TFT active matrix	
Display color	16,777,216 colors (At 8-bit input, FRC terminal= High) 262,144 colors (At 6-bit input, FRC terminal= Low or Open)	
Pixel	800 (H) × 600 (V) pixels	
Pixel arrangement	RGB (Red dot, Green dot, Blue dot) vertical stripe	
Dot pitch	0.071 (H) × 0.213 (V) mm	
Pixel pitch	0.213 (H) × 0.213 (V) mm	
Module size	200.0 (W) × 152.0 (H) × 10.5 (D) mm (typ.)	
Weight	TBDg (typ.)	2
Contrast ratio	(900:1)(typ.)	2
Viewing angle	*At the contrast ratio ≥10:1* • Horizontal: Right side 80° (typ.), Left side 80° (typ.) • Vertical: Up side 80° (typ.), Down side 80° (typ.)	2
Designed viewing direction	*At DPS terminal= Low or Open: Normal scan* • Viewing direction without image reversal: up side (12 o'clock) • Viewing direction with contrast peak: down side (6 o'clock) • Viewing angle with optimum grayscale (γ≒ 2.2): normal axis (perpendicular)	
Polarizer surface	Clear + Antireflection (AR)	
Polarizer pencil-hardness	2H (min.) [by JIS K5400]	
Color gamut	*At LCD panel center* 40% (typ.) [against NTSC color space]	
Response time	*Ton+Toff (10%←→ 90%)* (18)ms (typ.)	2
Luminance	*At IL=50mA/One circuit* (800) cd/m^2 (typ.)	2
Signal system	LVDS 1port (Receiver: THC63LVDF84B, THine Electronics Inc. or equivalent) [8bit/6bit digital signals for data of RGB colors, Dot clock (CLK), Data enable (DE)]	
Power supply voltage	LCD panel signal processing board: 3.3V	
Backlight	LED backlight type: (Replaceable part • Lamp holder set: Type No. TBD) (Recommended LED driver board (Option) • LED driver board: Type No. 104PW03F)	2
Power consumption	*At IL=50mA/One circuit, Checkered flag pattern* (5.6)W (typ.)	2 2

3. BLOCK DIAGRAM

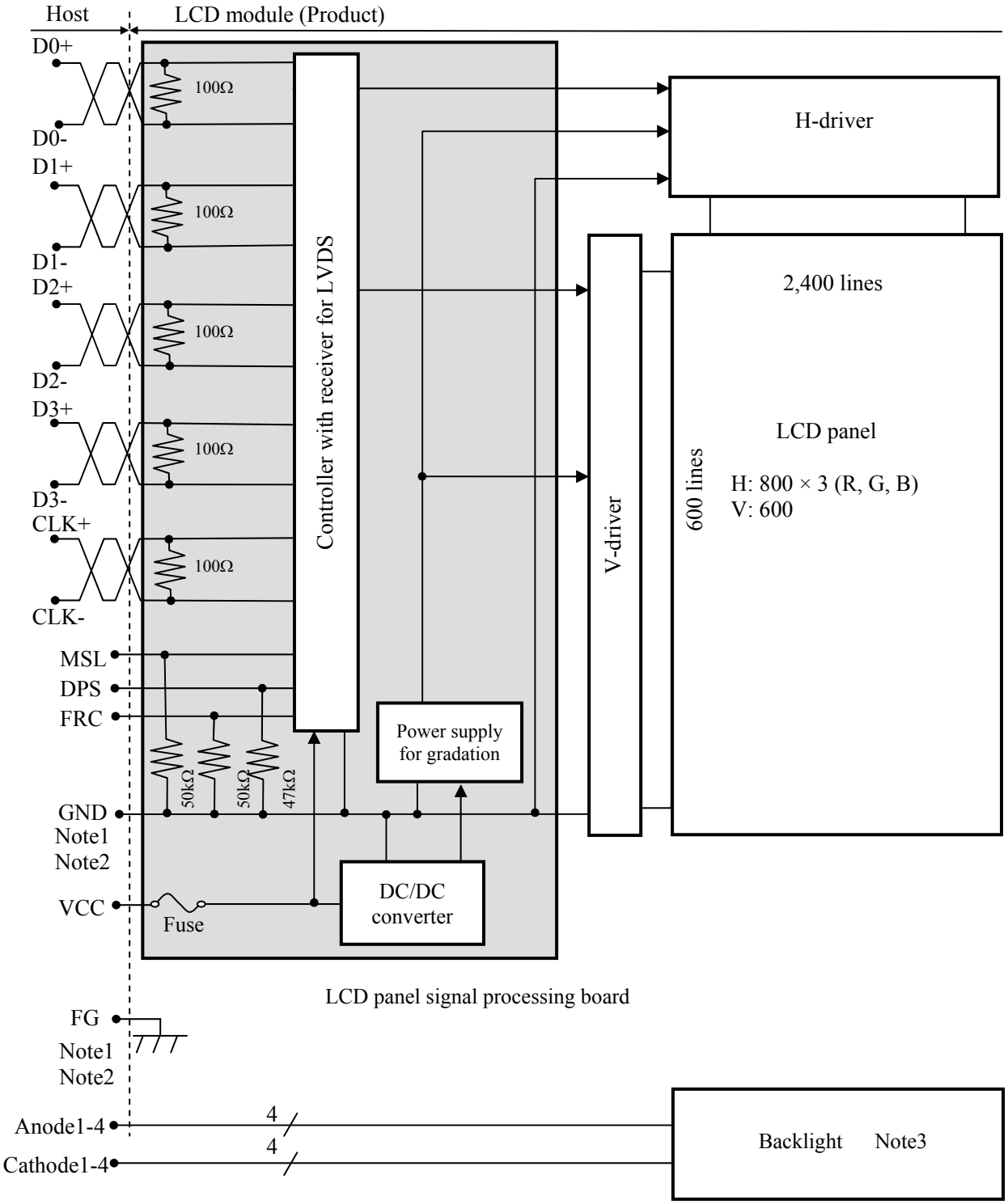

Note1: Relations between GND (Signal ground) and FG (Frame ground) in the LCD module are as follows.

GND - FG	Connected

Note2: GND and FG must be connected to customer equipment's ground, and it is recommended that these grounds be connected together in customer equipment.

Note3: Backlight in detail

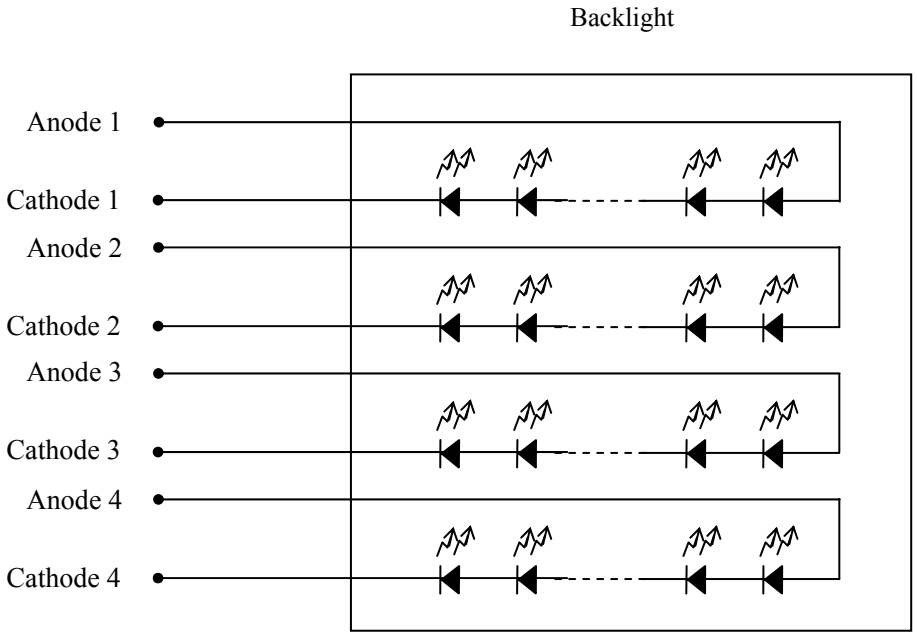

4. DETAILED SPECIFICATIONS

4.1 MECHANICAL SPECIFICATIONS

Parameter	Specification		Unit
Module size	200.0 ± 0.5 (W) × 152.0 ± 0.5 (H) × 10.5 ± 0.5 (D)	Note1	mm
Display area	170.4 (H) × 127.8 (V)	Note1	mm
Weight	TBD (typ.), TBD (max.)		g

2

Note1: See "**8. OUTLINE DRAWINGS**".

4.2 ABSOLUTE MAXIMUM RATINGS

Parameter		Symbol	Rating	Unit	Remarks
Power supply voltage	LCD panel signal processing board	VCC	-0.3 to +4.0	V	-
Input voltage for signals	Display signals Note1	VD	-0.3 to VCC+0.3	V	
	Function signals Note2	VF			
Backlight	Power dissipation	PD	TBD	W	per one circuit
	Forward current	IL	TBD	mA	per one circuit
Incident light intensity		II	150,000	lx	Note3
Storage temperature		Tst	-30 to +80	°C	-
Operating temperature	Front surface	TopF	-30 to +80	°C	Note4
	Rear surface	TopR	-30 to +80	°C	Note5
Relative humidity Note6		RH	≤ 95	%	Ta≤ 40°C
			≤ 85	%	40°C <Ta≤ 50°C
			≤ 55	%	50°C <Ta≤ 60°C
			≤ 36	%	60°C <Ta≤ 70°C
			≤ 24	%	70°C <Ta≤80°C
Absolute humidity Note6		AH	≤ 70 Note7	g/m^3	-

Note1: D0+/-, D1+/-, D2+/-, D3+/- and CLK+/-
Note2: DPS, FRC and MSL.
Note3: If the product surface (polarizer) is exposed to an ultraviolet ray, the polarizer may discolor (Surface treatment may be damaged.). Use a filter to protect the polarizer from the ultraviolet ray.
Note4: Measured at LCD panel surface (including self-heat)
Note5: Measured at LCD module's rear shield surface (including self-heat)
Note6: No condensation
Note7: Water amount at Ta= 70°C and RH= 36%

4.3 ELECTRICAL CHARACTERISTICS

4.3.1 LCD panel signal processing board

(Ta= 25°C)

Parameter		Symbol	min.	typ.	max.	Unit	Remarks
Power supply voltage		VCC	3.0	3.3	3.6	V	-
Power supply current		ICC	-	(300) Note1	(450) Note2	mA	at VCC= 3.3V
Permissible ripple voltage		VRP	-	-	100	mVp-p	for VCC
Differential input threshold voltage	High	VTH	-	-	+100	mV	at VCM= 1.2V Note3
	Low	VTL	-100	-	-	mV	
Terminating resistance		RT	-	100	-	Ω	-
Input voltage for DPS, FRC and MSL signals	High	VFH	0.7VCC	-	VCC	V	CMOS level
	Low	VFL	0	-	0.3VCC	V	
Input current for FRC signal	High	IFH	-	-	300	μA	-
	Low	IFL	-300	-	-	μA	

Note1: Checkered flag pattern [by EIAJ ED-2522]
Note2: Pattern for maximum current
Note3: Common mode voltage for LVDS receiver

4.3.2 Backlight lamp

(Ta=25°C, Note1, Note2)

Parameter	Symbol	min.	typ.	max.	Unit	Remarks
Forward current	IL	-	50.0	55.0	mA	Note3
Forward Voltage	VL	-	23.1	26.6	V	at IL=50 mA /One circuit

2

Note1: Please drive with constant current.
Note2: The Luminance uniformity may be changed depending on the current variation between 4 circuits. It is recommended that the current value difference between each circuit be less than 5%.
Note3: See "**4.2 ABSOLUTE MAXIMUM RATINGS Note3**".

4.3.3 Power supply voltage ripple

This product works, even if the ripple voltage levels are beyond the permissible values as sated in the following table, but there might be noise on the display image.

Power supply voltage		Ripple voltage Note1 (Measure at input terminal of power supply)	Unit
VCC	3.3V	≤ 100	mVp-p

Note1: The permissible ripple voltage includes spike noise.

4.3.4 Fuse

Parameter	Fuse		Rating	Fusing current	Remarks
	Type	Supplier			
VCC	TBD	TBD	TBD	TBD	Note1
			TBD		

Note1: The power supply capacity should be more than the fusing current. If it is less than the fusing current, the fuse may not blow in a short time, and then nasty smell, smoke and so on may occur.

4.4 POWER SUPPLY VOLTAGE SEQUENCE

4.4.1 LCD panel signal processing board

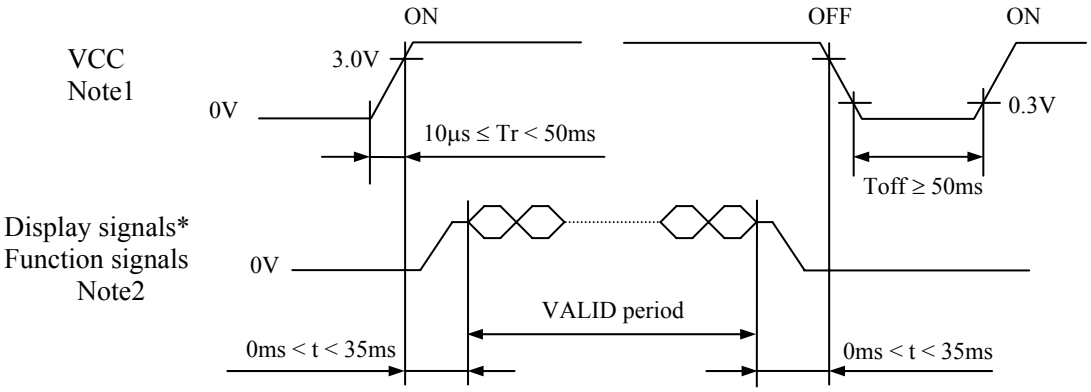

* These signals should be measured at the terminal of 100Ω resistance.

Note1: If there is a voltage variation (voltage drop) at the rising edge of VCC below 3.0V, there is a possibility that a product does not work due to a protection circuit.

Note2: Display signals (D0+/-, D1+/-, D2+/-, D3+/- and CLK+/-) and function signals (DPS, FRC and MSL) must be se to Low or High-impedance, exclude the VALID period (See above sequence diagram), in order to avoid the internal circuitry damage.
If some of display and function signals of this product are cut while this product is working, even if the signal input to it once again, it might not work normally. VCC should be cut when the display and function signals are stopped.

4.4.2 LED driver board (Option) 2

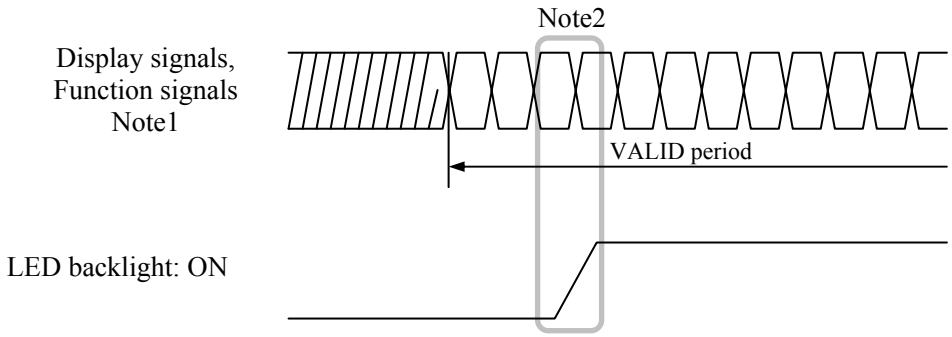

Note1: These are the display and function signals for LCD panel signal processing board.

Note2: The backlight should be turned on within the valid period of display and function signals, in order to avoid unstable data display.

4.5 CONNECTIONS AND FUNCTIONS FOR INTERFACE PINS

4.5.1 LCD panel signal processing board

CN1 socket (LCD module side): FI-SE20P-HFE (Japan Aviation Electronics Industry Limited (JAE))
Adaptable plug: FI-S20S (Japan Aviation Electronics Industry Limited (JAE))

2

Pin No.		Symbol	Signal	Input data signal: 8bit		Input data signal: 6bit	Remarks
				MAP A	MAP B		
1	A	D3+	Pixel data	R0-R1,G0-G1,B0-B1	R6-R7,G6-G7,B6-B7	-	Note1, Note2
	B	GND	Ground	-		Ground	Note3
2	A	D3-	Pixel data	R0-R1,G0-G1,B0-B1	R6-R7,G6-G7,B6-B7	-	Note1, Note2
	B	GND	Ground	-		Ground	Note3
3		DPS	Selection of scan direction	High : Reverse scan Low or Open : Normal scan			Note4
4		FRC	Selection of the number of colors	High		Low or Open	Note1 Note5
5		GND	Ground	Ground			Note3
6		CLK+	Pixel clock	Pixel clock			Note2
7		CLK-					
8		GND	Ground	Ground			Note3
9		D2+	Pixel data	B4-B7,DE	B2-B5,DE		Note2
10		D2-					
11		GND	Ground	Ground			Note3
12		D1+	Pixel data	G3-G7,B2-B3	G1-G5,B0-B1		Note2
13		D1-					
14		GND	Ground	Ground			Note3
15		D0+	Pixel data	R2-R7,G2	R0-R5,G0		Note2
16		D0-					
17		GND	Ground	Ground			Note3
18		MSL	Selection of LVDS input map	Low	High	Low	Note5
19		VCC	Power supply	Power supply			Note3
20		VCC					

Note1: See "**4.6 DISPLAY COLORS AND INPUT DATA SIGNALS**".
Note2: Twist pair wires with 100Ω (Characteristic impedance) should be used between LCD panel signal processing board and LVDS transmitter.
Note3: All GND and VCC terminals should be used without any non-connected lines.
Note4: See "**4.8 SCANNING DIRECTIONS**".
Note5: See "**4.5.4 Connection between receiver and transmitter for LVDS**".

4.5.2 Backlight lamp

CN2 plug (LCD module side): SM08B-SRSS-TB (J.S.T. Mfg. Co., Ltd.)
Adaptable socket: SHR-08V-S (J.S.T. Mfg. Co., Ltd.)

Pin No.	Symbol	Signal	Remarks
1	A1	Anode1	-
2	K1	Cathode1	-
3	A2	Anode2	-
4	K2	Cathode2	-
5	A3	Anode3	-
6	K3	Cathode3	-
7	A4	Anode4	-
8	K4	Cathode4	-

4.5.3 Positions of plug and socket

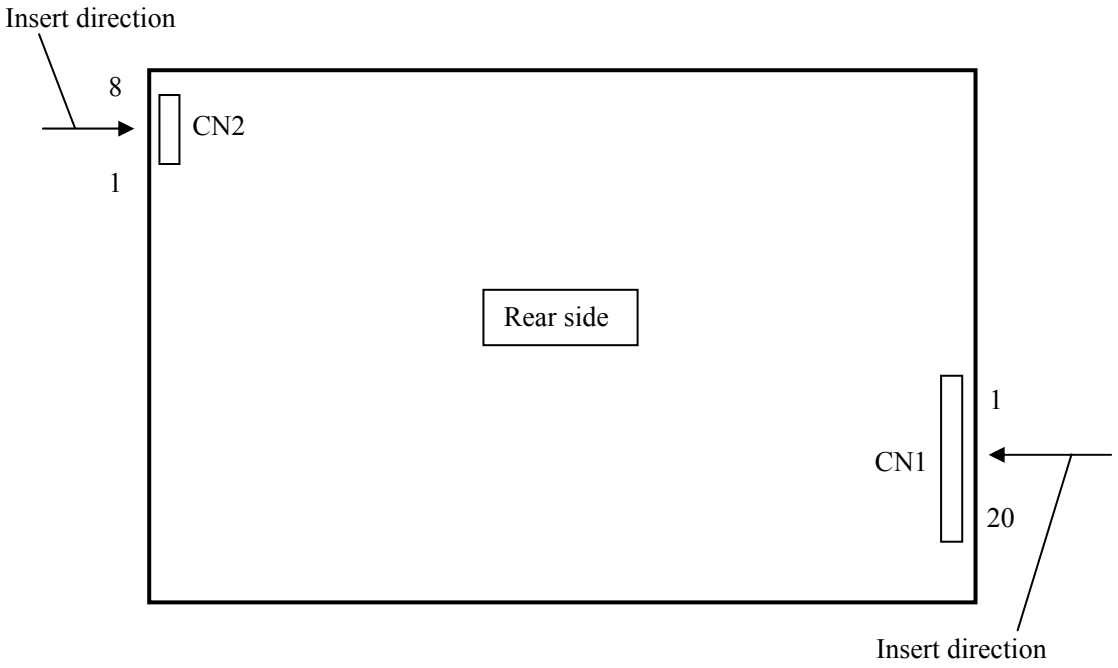

4.5.4 Connection between receiver and transmitter for LVDS

(1) Input data signal: 8bit, MAP A

2

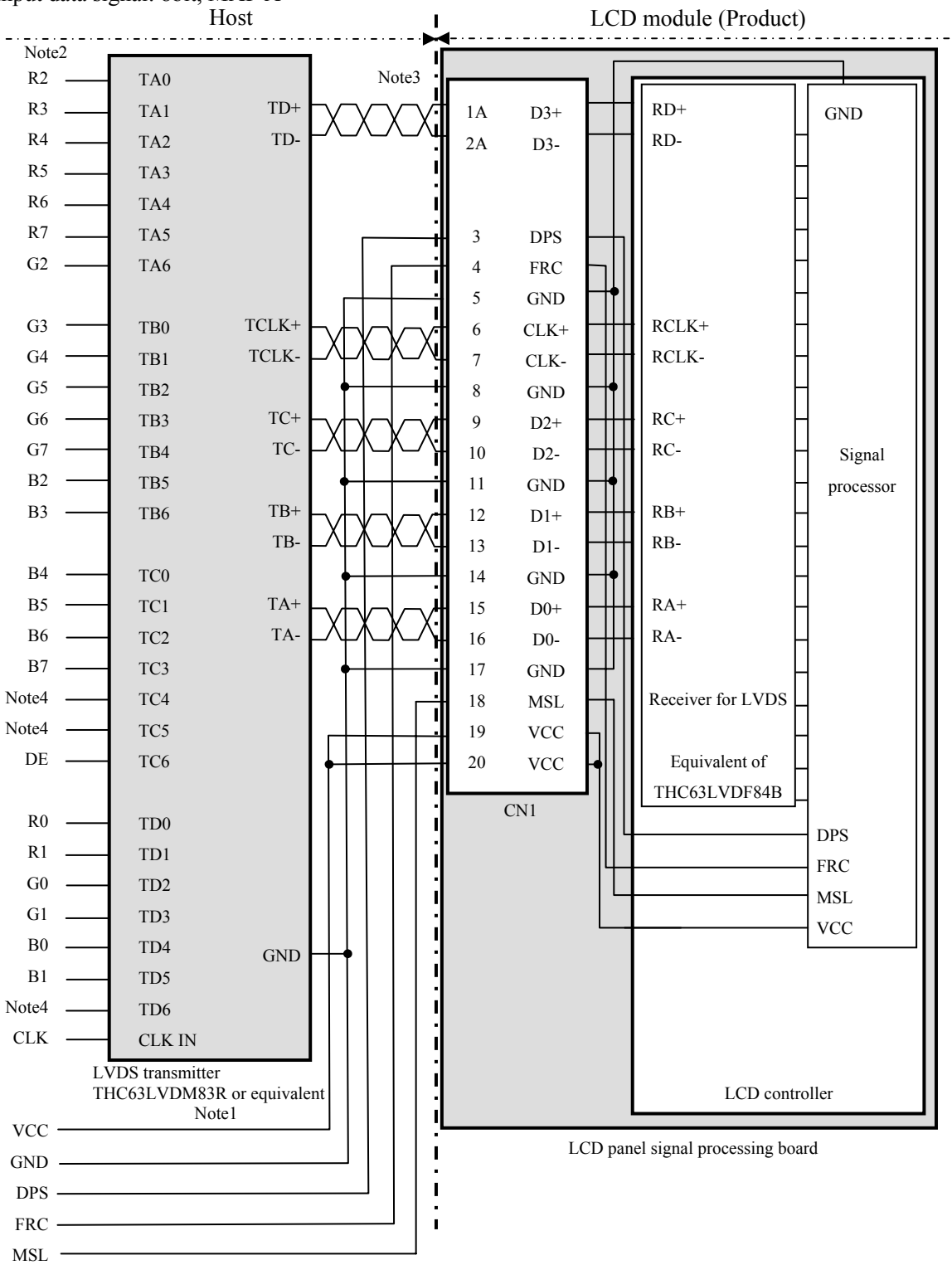

Note1: Recommended transmitter: THC63LVDM83R (THine Electronics Inc.) or equivalent

Note2: LSB (Least Significant Bit) – R0, G0, B0 MSB (Most Significant Bit) – R7, G7, B7

Note3: Twist pair wires with 100Ω (Characteristic impedance) should be used between LCD panel signal processing board and LVDS transmitter.

Note4: Input signals to TC4, TC5 and TD6 are not used inside the product, but do not keep TC4, TC5 and TD6 open to avoid noise problem.

(2) Input data signal: 8bit, MAP B

2

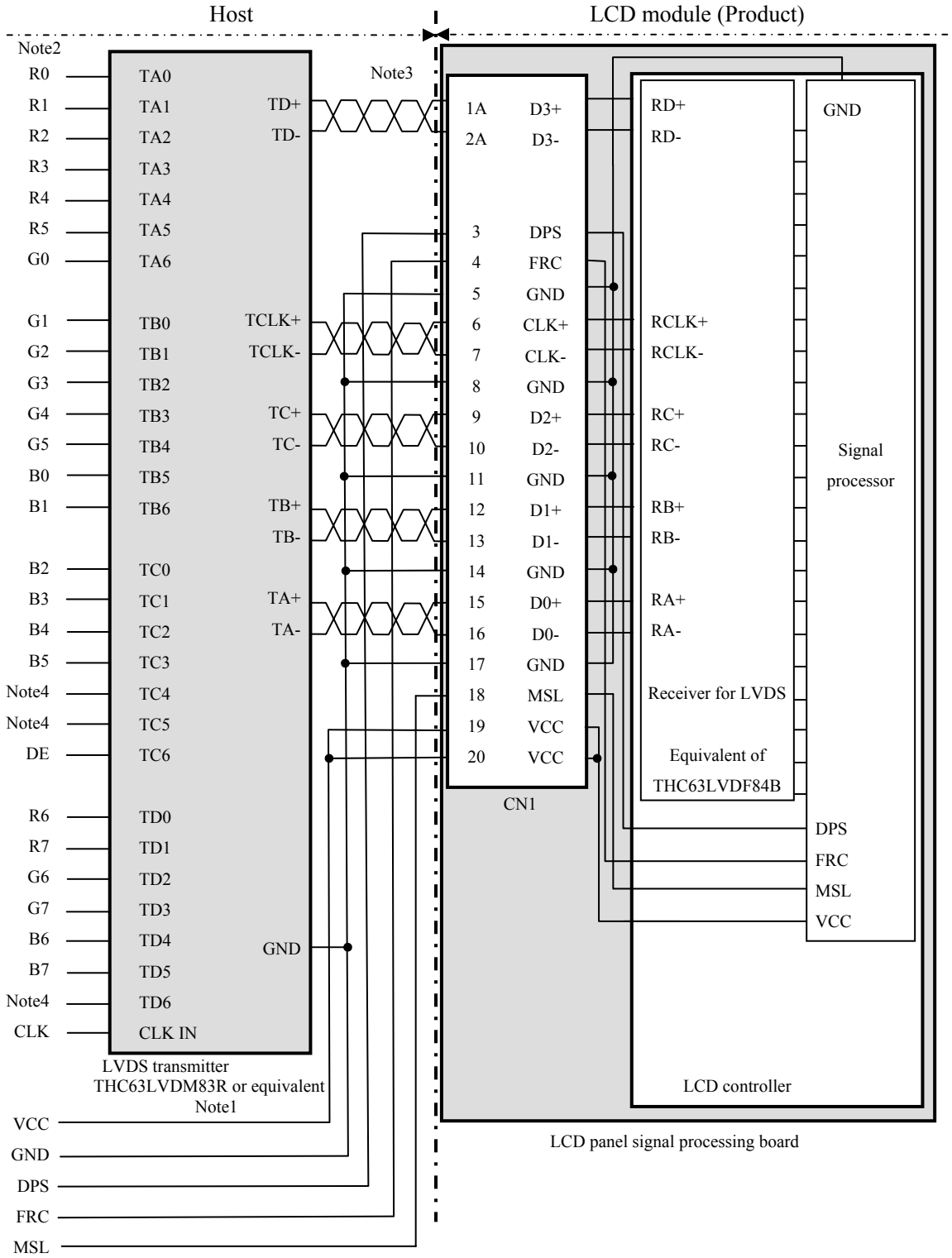

Note1: Recommended transmitter: THC63LVDM83R (THine Electronics Inc.) or equivalent

Note2: LSB (Least Significant Bit) – R0, G0, B0 MSB (Most Significant Bit) – R7, G7, B7

Note3: Twist pair wires with 100Ω (Characteristic impedance) should be used between LCD panel signal processing board and LVDS transmitter.

Note4: Input signals to TC4, TC5 and TD6 are not used inside the product, but do not keep TC4, TC5 and TD6 open to avoid noise problem.

(3) Input data signal: 6bit

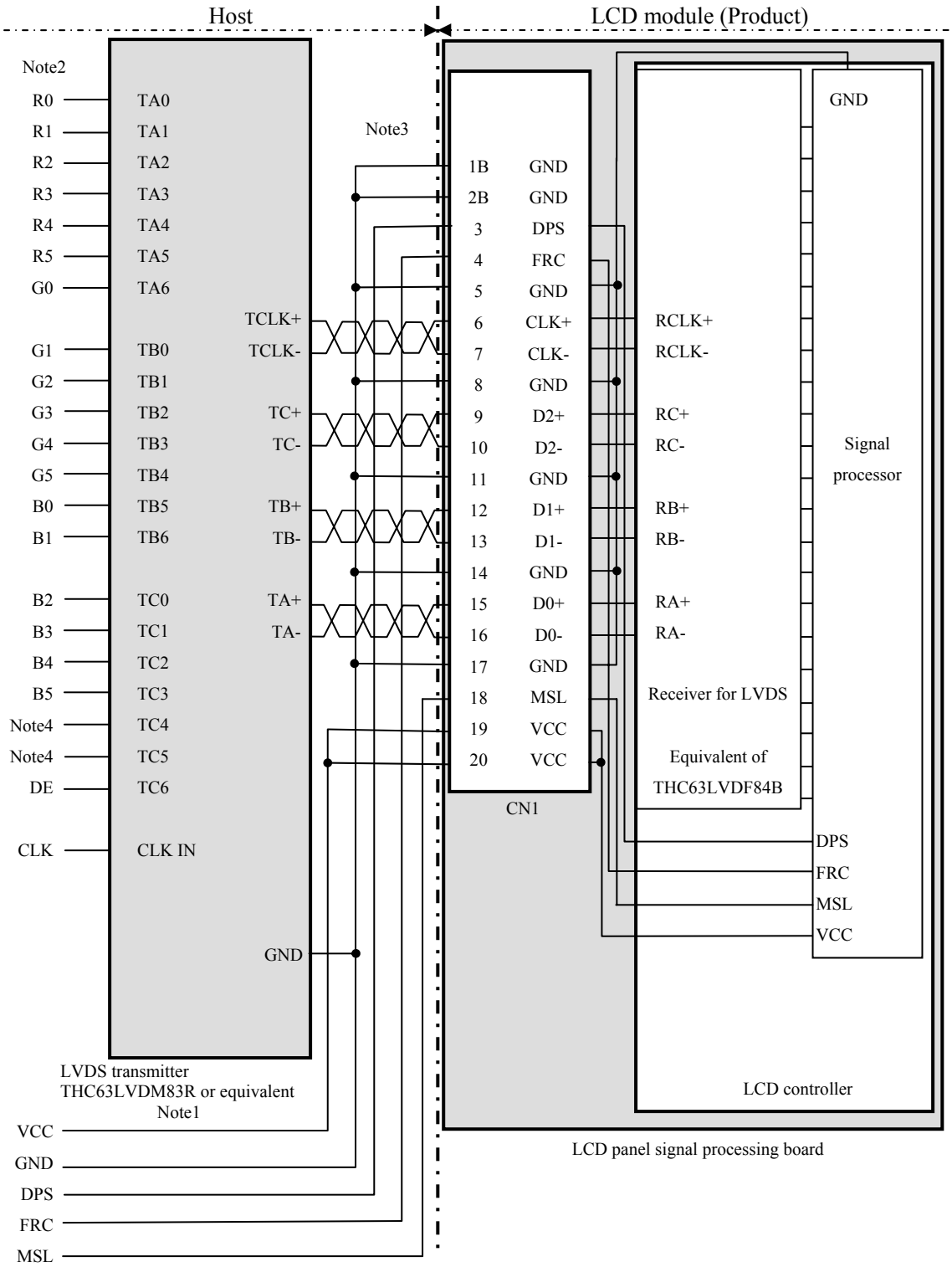

Note1: Recommended transmitter THC63LVDM83R (THine Electronics Inc.) or equivalent
Note2: LSB (Least Significant Bit) – R0, G0, B0 MSB (Most Significant Bit) – R5, G5, B5
Note3: Twist pair wires with 100Ω (Characteristic impedance) should be used between LCD panel signal processing board and LVDS transmitter.
Note4: Input signals to TC4 and TC5 are not used inside the product, but do not keep TC4 and TC5 open to avoid noise problem.

4.6 DISPLAY COLORS AND INPUT DATA SIGNALS

4.6.1 Combinations between input data signals and FRC signal

This product can display 16,777,216 colors equivalent in 256 gray scales and 262,144 colors equivalent in 64 gray scales by combination of input data, FRC and MSL signals. See the following table.

Combination	Input data signals	Input Data mapping	CN1- Pin No.1 and 2	FRC terminal	MSL terminal	Display colors	Remarks
①	8 bit	MAP A	D3+/-	High	Low	16,777,216	Note1
②	8 bit	MAP B	D3+/-	High	High	16,777,216	Note1
③	6 bit	-	GND	Low or open	Low	262,144	Note2

Note1: See "**4.6.2 16,777,216 colors**".
Note2: See "**4.6.3 262,144 colors**".

4.6.2 16,777,216 colors

This product can display 16,777,216 colors equivalent in 256 gray scales by combination ① or ②.
(See "**4.6.1 Combinations between input data signals, FRC signal and MSL signal**".)
Also the relation between display colors and input data signals is as follows.

Display colors		Data signal (0: Low level, 1: High level)																							
		R7	R6	R5	R4	R3	R2	R1	R0	G7	G6	G5	G4	G3	G2	G1	G0	B7	B6	B5	B4	B3	B2	B1	B0
Basic Colors	Black	0	0	0	0	0	0	0	0	0	0	0	0	0	0	0	0	0	0	0	0	0	0	0	0
	Blue	0	0	0	0	0	0	0	0	0	0	0	0	0	0	0	0	1	1	1	1	1	1	1	1
	Red	1	1	1	1	1	1	1	1	0	0	0	0	0	0	0	0	0	0	0	0	0	0	0	0
	Magenta	1	1	1	1	1	1	1	1	0	0	0	0	0	0	0	0	1	1	1	1	1	1	1	1
	Green	0	0	0	0	0	0	0	0	1	1	1	1	1	1	1	1	0	0	0	0	0	0	0	0
	Cyan	0	0	0	0	0	0	0	0	1	1	1	1	1	1	1	1	1	1	1	1	1	1	1	1
	Yellow	1	1	1	1	1	1	1	1	1	1	1	1	1	1	1	1	0	0	0	0	0	0	0	0
	White	1	1	1	1	1	1	1	1	1	1	1	1	1	1	1	1	1	1	1	1	1	1	1	1
Red gray scale	Black	0	0	0	0	0	0	0	0	0	0	0	0	0	0	0	0	0	0	0	0	0	0	0	0
		0	0	0	0	0	0	0	1	0	0	0	0	0	0	0	0	0	0	0	0	0	0	0	0
	dark	0	0	0	0	0	0	1	0	0	0	0	0	0	0	0	0	0	0	0	0	0	0	0	0
	↑					:								:								:			
	↓					:								:								:			
	bright	1	1	1	1	1	1	0	1	0	0	0	0	0	0	0	0	0	0	0	0	0	0	0	0
		1	1	1	1	1	1	1	0	0	0	0	0	0	0	0	0	0	0	0	0	0	0	0	0
	Red	1	1	1	1	1	1	1	1	0	0	0	0	0	0	0	0	0	0	0	0	0	0	0	0
Green gray scale	Black	0	0	0	0	0	0	0	0	0	0	0	0	0	0	0	0	0	0	0	0	0	0	0	0
		0	0	0	0	0	0	0	0	0	0	0	0	0	0	0	1	0	0	0	0	0	0	0	0
	dark	0	0	0	0	0	0	0	0	0	0	0	0	0	0	1	0	0	0	0	0	0	0	0	0
	↑					:								:								:			
	↓					:								:								:			
	bright	0	0	0	0	0	0	0	0	1	1	1	1	1	1	0	1	0	0	0	0	0	0	0	0
		0	0	0	0	0	0	0	0	1	1	1	1	1	1	1	0	0	0	0	0	0	0	0	0
	Green	0	0	0	0	0	0	0	0	1	1	1	1	1	1	1	1	0	0	0	0	0	0	0	0
Blue gray scale	Black	0	0	0	0	0	0	0	0	0	0	0	0	0	0	0	0	0	0	0	0	0	0	0	0
		0	0	0	0	0	0	0	0	0	0	0	0	0	0	0	0	0	0	0	0	0	0	0	1
	dark	0	0	0	0	0	0	0	0	0	0	0	0	0	0	0	0	0	0	0	0	0	0	1	0
	↑					:								:								:			
	↓					:								:								:			
	bright	0	0	0	0	0	0	0	0	0	0	0	0	0	0	0	0	1	1	1	1	1	1	0	1
		0	0	0	0	0	0	0	0	0	0	0	0	0	0	0	0	1	1	1	1	1	1	1	0
	Blue	0	0	0	0	0	0	0	0	0	0	0	0	0	0	0	0	1	1	1	1	1	1	1	1

4.6.3 262,144 colors

This product can display 262,144 colors in 64 gray scales by combination ③.
(See "**4.6.1 Combinations between input data signals, FRC signal and MSL signal**".)
Also the relation between display colors and input data signals is as follows.

Display colors		Data signal (0: Low level, 1: High level)																	
		R5	R4	R3	R2	R1	R0	G5	G4	G3	G2	G1	G0	B5	B4	B3	B2	B1	B0
Basic colors	Black	0	0	0	0	0	0	0	0	0	0	0	0	0	0	0	0	0	0
	Blue	0	0	0	0	0	0	0	0	0	0	0	0	1	1	1	1	1	1
	Red	1	1	1	1	1	1	0	0	0	0	0	0	0	0	0	0	0	0
	Magenta	1	1	1	1	1	1	0	0	0	0	0	0	1	1	1	1	1	1
	Green	0	0	0	0	0	0	1	1	1	1	1	1	0	0	0	0	0	0
	Cyan	0	0	0	0	0	0	1	1	1	1	1	1	1	1	1	1	1	1
	Yellow	1	1	1	1	1	1	1	1	1	1	1	1	0	0	0	0	0	0
	White	1	1	1	1	1	1	1	1	1	1	1	1	1	1	1	1	1	1
Red gray scale	Black	0	0	0	0	0	0	0	0	0	0	0	0	0	0	0	0	0	0
		0	0	0	0	0	1	0	0	0	0	0	0	0	0	0	0	0	0
	dark	0	0	0	0	1	0	0	0	0	0	0	0	0	0	0	0	0	0
	↑				:						:						:		
	↓				:						:						:		
	bright	1	1	1	1	0	1	0	0	0	0	0	0	0	0	0	0	0	0
		1	1	1	1	1	0	0	0	0	0	0	0	0	0	0	0	0	0
	Red	1	1	1	1	1	1	0	0	0	0	0	0	0	0	0	0	0	0
Green gray scale	Black	0	0	0	0	0	0	0	0	0	0	0	0	0	0	0	0	0	0
		0	0	0	0	0	0	0	0	0	0	0	1	0	0	0	0	0	0
	dark	0	0	0	0	0	0	0	0	0	0	1	0	0	0	0	0	0	0
	↑				:						:						:		
	↓				:						:						:		
	bright	0	0	0	0	0	0	1	1	1	1	0	1	0	0	0	0	0	0
		0	0	0	0	0	0	1	1	1	1	1	0	0	0	0	0	0	0
	Green	0	0	0	0	0	0	1	1	1	1	1	1	0	0	0	0	0	0
Blue gray scale	Black	0	0	0	0	0	0	0	0	0	0	0	0	0	0	0	0	0	0
		0	0	0	0	0	0	0	0	0	0	0	0	0	0	0	0	0	1
	dark	0	0	0	0	0	0	0	0	0	0	0	0	0	0	0	0	1	0
	↑				:						:						:		
	↓				:						:						:		
	bright	0	0	0	0	0	0	0	0	0	0	0	0	1	1	1	1	0	1
		0	0	0	0	0	0	0	0	0	0	0	0	1	1	1	1	1	0
	Blue	0	0	0	0	0	0	0	0	0	0	0	0	1	1	1	1	1	1

4.7 DISPLAY POSITIONS

The following table is the coordinates per pixel (See **"4.8 SCANNING DIRECTIONS"**.).

C (0, 0)

R	G	B

C(0, 0)	C(1, 0)	• • •	C(X, 0)	• • •	C(798, 0)	C(799, 0)
C(0, 1)	C(1, 1)	• • •	C(X, 1)	• • •	C(798, 1)	C(799, 1)
• • •	• • •	• • •	• • •	• • •	• • •	• • •
C(0, Y)	C(1, Y)	• • •	C(X, Y)	• • •	C(798, Y)	C(799, Y)
• • •	• • •	• • •	• • •	• • •	• • •	• • •
C(0, 598)	C(1, 598)	• • •	C(X, 598)	• • •	C(798, 598)	C(799, 598)
C(0, 599)	C(1, 599)	• • •	C(X, 599)	• • •	C(798, 599)	C(799, 599)

4.8 SCANNING DIRECTIONS

The following figures are seen from a front view. Also the arrow shows the direction of scan.

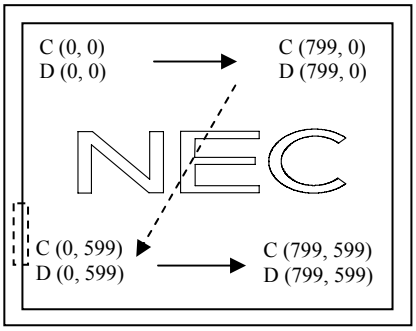

Note1 2

Figure1. Normal scan (DPS: Low or Open)

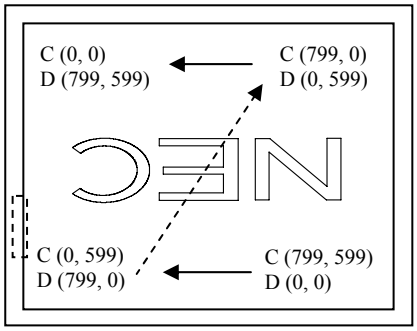

Note1 2

Figure2. Reverse scan (DPS: High)

Note1: Meaning of C (X, Y) and D (X, Y)
C (X, Y): The coordinates of the display position (See "**4.7 DISPLAY POSITIONS**".)
D (X, Y): The data number of input signal for LCD panel signal processing board

4.9 INPUT SIGNAL TIMINGS

4.9.1 Outline of input signal timings

- Horizontal signal

Note1

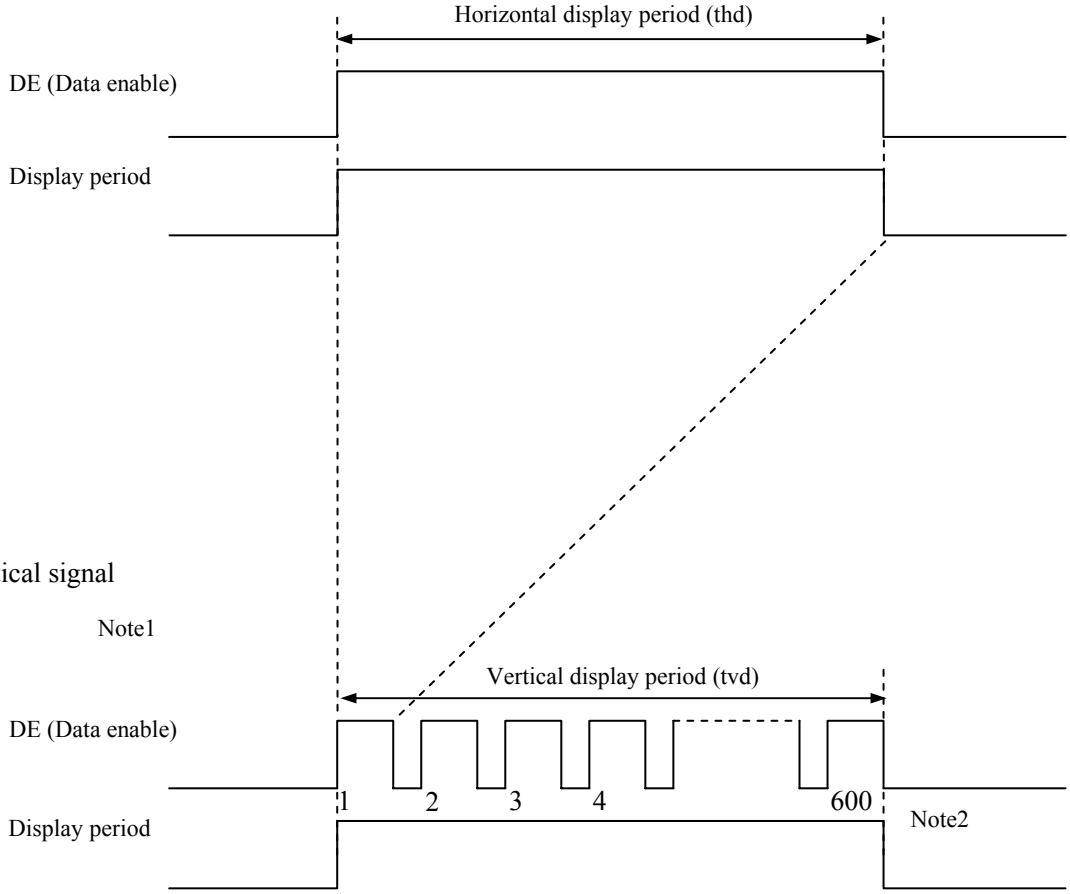

- Vertical signal

Note1

Note1: This diagram indicates virtual signal for set up to timing.
Note2: See "**4.9.3 Input signal timing chart**" for numeration of pulse.

4.9.2 Timing characteristics

(Note1, Note2, Note3)

Parameter			Symbol	min.	typ.	max.	Unit	Remarks
CLK	Frequency		1/tc	34.0	38.362	40.0	MHz	26.067ns (typ.)
	Duty		-	-			-	-
	Rise time, Fall time		-				ns	
DATA	CLK-DATA	Setup time	-	-			ns	-
		Hold time	-				ns	
	Rise time, Fall time		-				ns	
DE	Horizontal	Cycle	th	24.0	26.693	30.1	µs	37.463kHz (typ.)
				-	1,024	-	CLK	
		Display period	thd	800			CLK	
	Vertical (One frame)	Cycle	tv	16.1	16.683	17.2	ms	59.94Hz (typ.)
				-	625	-	H	
		Display period	tvd	600			H	
	CLK-DE	Setup time	-	-			ns	-
		Hold time	-				ns	
	Rise time, Fall time		-				ns	

Note1: Definition of parameters is as follows.
tc= 1CLK, th= 1H
Note2: See the data sheet of LVDS transmitter.
Note3: Vertical cycle (tv) should be specified in integral multiple of Horizontal cycle (th).

4.9.3 Input signal timing chart

Horizontal timing

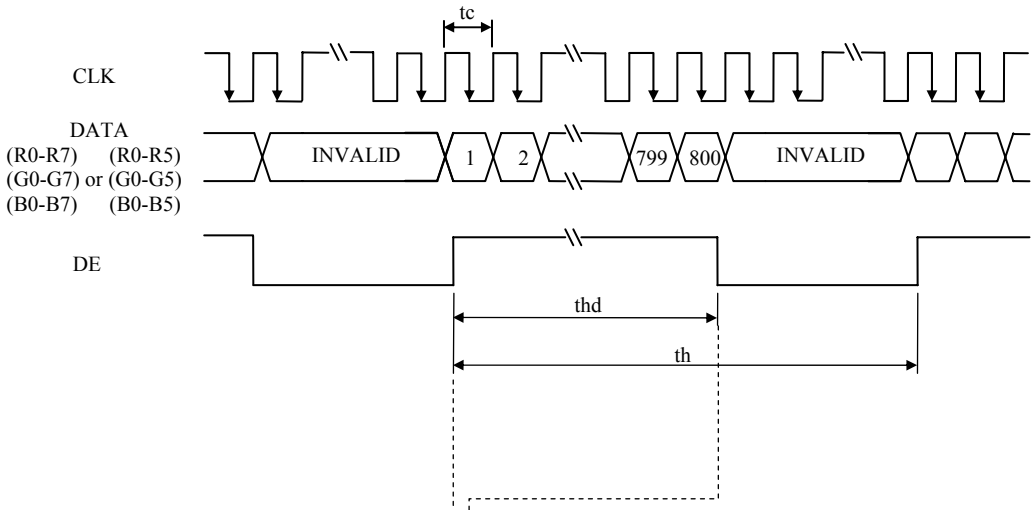

Vertical timing

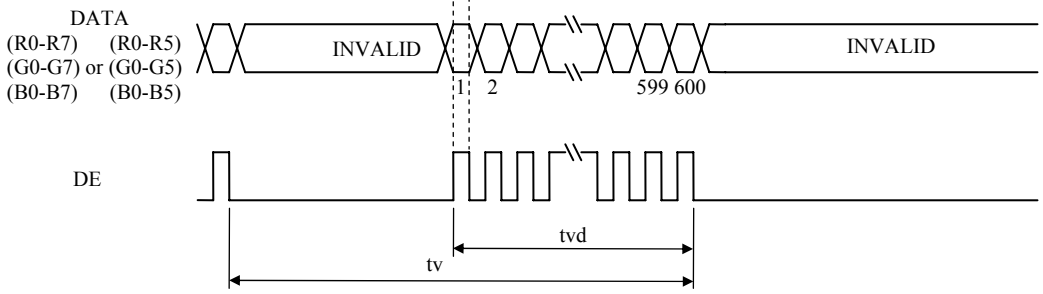

4.10 OPTICS

4.10.1 Optical characteristics

(Note1, Note2)

Parameter		Condition	Symbol	min.	typ.	max.	Unit	Measuring instrument	Remarks
Luminance		White at center θR= 0°, θL= 0°, θU= 0°, θD= 0°	L	TBD	(800)	-	cd/m^2	BM-5A	-
Contrast ratio		White/Black at center θR= 0°, θL= 0°, θU= 0°, θD= 0°	CR	TBD	(900)	-	-	BM-5A	Note3
Luminance uniformity		White θR= 0°, θL= 0°, θU= 0°, θD= 0°	LU	-	1.25	1.4	-	BM-5A	Note4
Chromaticity	White	x coordinate	Wx	TBD	TBD	TBD	-	SR-3	Note5
		y coordinate	Wy	TBD	TBD	TBD	-		
	Red	x coordinate	Rx	-	TBD	-	-		
		y coordinate	Ry	-	TBD	-	-		
	Green	x coordinate	Gx	-	TBD	-	-		
		y coordinate	Gy	-	TBD	-	-		
	Blue	x coordinate	Bx	-	TBD	-	-		
		y coordinate	By	-	TBD	-	-		
Color gamut		θR= 0°, θL= 0°, θU= 0°, θD= 0° at center, against NTSC color space	C	TBD	40	-	%		
Response time		White to Black	Ton	-	3	5	ms	BM-5A	Note6
		Black to White	Toff	-	15	20	ms		Note7
Viewing angle	Right	θU= 0°, θD= 0°, CR≥ 10	θR	70	80	-	°	EZ Contrast	Note8
	Left	θU= 0°, θD= 0°, CR≥ 10	θL	70	80	-	°		
	Up	θR= 0°, θL= 0°, CR≥ 10	θU	70	80	-	°		
	Down	θR= 0°, θL= 0°, CR≥ 10	θD	70	80	-	°		

Note1: These are initial characteristics.

Note2: Measurement conditions are as follows.

Ta= 25°C, VCC= 3.3V, IL= 50mA/One circuit, Display mode: SVGA, Horizontal cycle= 1/37.463kHz,

Vertical cycle= 1/59.94Hz, DPS= Low or Open: Normal scan

Optical characteristics are measured at luminance saturation 20minutes after a product works in the dark room. Also measurement methods are as follows.

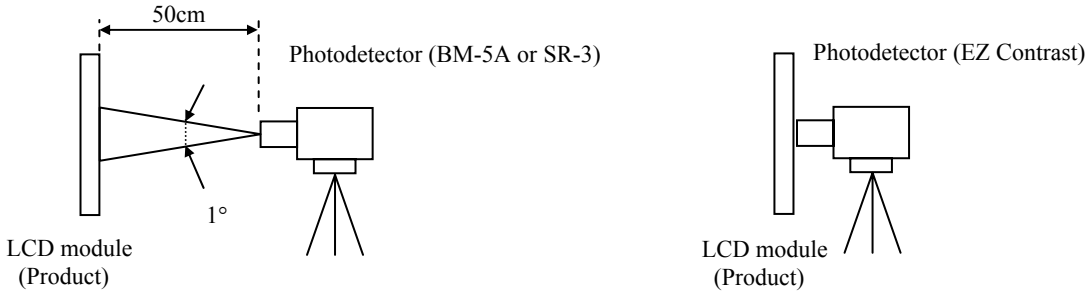

Note3: See "**4.10.2 Definition of contrast ratio**".

Note4: See "**4.10.3 Definition of luminance uniformity**".

Note5: These coordinates are found on CIE 1931 chromaticity diagram.

Note6: Product surface temperature: TopF= TBD °C

Note7: See "**4.10.4 Definition of response times**".

Note8: See "**4.10.5 Definition of viewing angles**".

4.10.2 Definition of contrast ratio

The contrast ratio is calculated by using the following formula.

$$\text{Contrast ratio (CR)} = \frac{\text{Luminance of white screen}}{\text{Luminance of black screen}}$$

4.10.3 Definition of luminance uniformity

The luminance uniformity is calculated by using following formula.

$$\text{Luminance uniformity (LU)} = \frac{\text{Maximum luminance from ① to ⑤}}{\text{Minimum luminance from ① to ⑤}}$$

The luminance is measured at near the 5 points shown below.

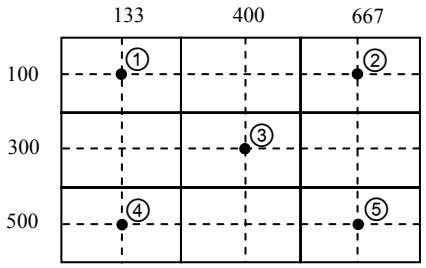

4.10.4 Definition of response times

Response time is measured at the time when the luminance changes from "white" to "black", or "black" to "white" on the same screen point, by photo-detector. Ton is the time when the luminance change from 90% down to 10%. Also Toff is the time when the luminance change from 10% up to 90% (See the following diagram.).

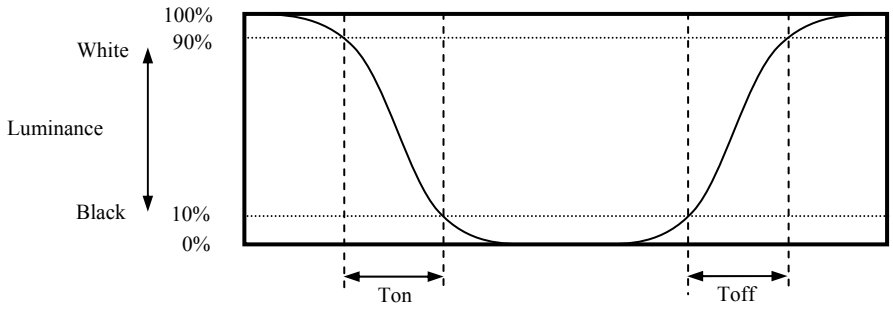

4.10.5 Definition of viewing angles

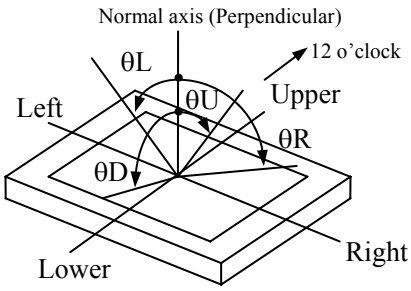

5. ESTIMATED LUMINANCE LIFETIME

The luminance lifetime is the time from initial luminance to half-luminance.

This lifetime is the estimated value, and is not guarantee value.

Condition		Expected luminance lifetime Note1, Note2	Unit	
LED elementary substance	25°C (Ambient temperature of the product) Continuous operation, IL=50mA/One circuit	70,000	h	2
	80°C (Surface temperature at screen) Continuous operation, IL=50mA/One circuit	60,000	h	2

Note1: Expected luminance lifetime is not the value for LCD module but the value for LED elementary substance.

Note2: The lifetime changes particularly depending on the ambient temperature. Especially in case that the product works under high temperature environment, the lifetime becomes short.

6. RELIABILITY TESTS

Test item	Condition	Judgment Note1
High temperature and humidity (Operation)	① 60 ± 2°C, RH= 90%, 240hours ② Display data is black.	No display malfunctions
High temperature (Operation)	① 80 ± 3°C ,240hours ② Display data is black.	
Heat cycle (Operation)	① -30 ± 3°C…1hour 80 ± 3°C…1hour ② 50cycles, 4 hours/cycle ③ Display data is black.	
Thermal shock (Non operation)	① -30 ± 3°C…30minutes 80 ± 3°C…30minutes ② 100cycles, 1hour/cycle ③ Temperature transition time is within 5 minutes.	
ESD (Operation)	① 150pF, 150Ω, ±10kV ② 9 places on a panel surface Note2 ③ 10 times each places at 1 sec interval	
Dust (Operation)	① Sample dust: No. 15 (by JIS-Z8901)) ② 15 seconds stir ③ 8 times repeat at 1 hour interval	
Vibration (Non operation)	① 5 to 100Hz, 19.6m/s^2 ② 1 minute/cycle ③ X, Y, Z directions ④ 120 times each directions	No display malfunctions No physical damages
Mechanical shock (Non operation)	① 539m/ s^2, 11ms ② ±X, ±Y, ±Z directions ③ 5 times each directions	

Note1: Display and appearance are checked under environmental conditions equivalent to the inspection conditions of defect criteria.

Note2: See the following figure for discharge points.

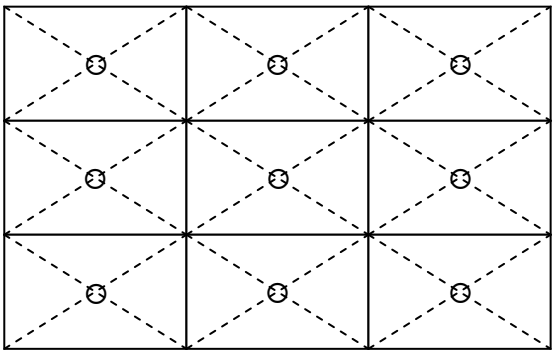

7. PRECAUTIONS

7.1 MEANING OF CAUTION SIGNS

The following caution signs have very important meaning. **Be sure to read "7.2 CAUTIONS" and "7.3 ATTENTIONS".**

⚠	This sign has the meaning that a customer will be injured by personnel or the product will sustain a damage, if the customer has wrong operations.
✋	This sign has the meaning that a customer will be injured by personnel, if the customer has wrong operations.

7.2 CAUTIONS

✋

∗ **Do not shock and press the LCD panel and the backlight! There is a danger of breaking, because they are made of glass. (Shock: Equal to or no greater than 539m/s^2 and equal to or no greater than 11ms, Pressure: Equal to or no greater than 19.6 N (ϕ16mm jig))**

2

7.3 ATTENTIONS ⚠

7.3.1 Handling of the product

① Take hold of both ends without touching the circuit board when the product (LCD module) is picked up from inner packing box to avoid broken down or misadjustment, because of stress to mounting parts on the circuit board.
② When the product is put on the table temporarily, display surface must be placed downward.
③ When handling the product, take the measures of electrostatic discharge with such as earth band, ionic shower and so on, because the product may be damaged by electrostatic.
④ The torque for product mounting screws must never exceed 0.294N·m. Higher torque might result in distortion of the bezel.
⑤ The product must be installed using mounting holes without undue stress such as bends or twist (See outline drawings). And do not add undue stress to any portion (such as bezel flat area). Bends or twist described above and undue stress to any portion may cause display mura.
⑥ Do not press or rub on the sensitive product surface. When cleaning the product surface, wipe it with a soft dry cloth.
⑦ Do not push or pull the interface connectors while the product is working.
⑧ When handling the product, use of an original protection sheet on the product surface (polarizer) is recommended for protection of product surface. Adhesive type protection sheet may change color or characteristics of the polarizer.
⑨ Usually liquid crystals don't leak through the breakage of glasses because of the surface tension of thin layer and the construction of LCD panel. But, if you contact with liquid crystal by any chance, please wash it away with soap and water.

7.3.2 Environment

① Do not operate or store in high temperature, high humidity, dewdrop atmosphere or corrosive gases. Keep the product in packing box with antistatic pouch in room temperature to avoid dusts and sunlight, when storing the product.
② In order to prevent dew condensation occurred by temperature difference, the product packing box must be opened after enough time being left in an unpacking room. Evaluate the storage time sufficiently because a dew condensation is affected by the environmental temperature and humidity. (Recommended leaving time: 6 hours or more with packing state)
③ Do not operate in high magnetic field. If you do, circuit boards may be broken down by it.
④ This product is not designed as radiation hardened.

7.3.3 Characteristics

The following items are neither defects nor failures.

① Characteristics of the LCD (such as response time, luminance, color uniformity and so on) may be changed depending on ambient temperature. If the product is stored under condition of low temperature for a long time, it may cause display mura. In this case, the product should be operated after enough time being left under condition of operating temperature.
② Display mura, flicker, vertical seam or small spot may be observed depending on display patterns.
③ Do not display the fixed pattern for a long time because it may cause image sticking. Use a screen saver, if the fixed pattern is displayed on the screen.
④ The display color may be changed depending on viewing angle because of the use of condenser sheet in the backlight.
⑤ Optical characteristics may be changed depending on input signal timings.
⑥ The product gives AR (antireflection) coating of the polarizer surface. Though AR (antireflection) coating actualizes the low reflection with the multilayer structure, the color of reflection may differ among products and the color change of reflection may occur in the same product by fluctuation of AR (antireflection) coating.

7.3.4 Other

① All VCC and GND terminals should be used without any non-connected lines.
② Do not disassemble a product or adjust variable resistors.
③ See "REPLACEMENT MANUAL FOR LAMP HOLDER SET", when replacing lamp holder set. 2
④ Pack the product with original shipping package, in order to avoid any damages during transportation, when returning the product to NEC for repairing and so on. 2

8. OUTLINE DRAWINGS

8.1 FRONT VIEW

2

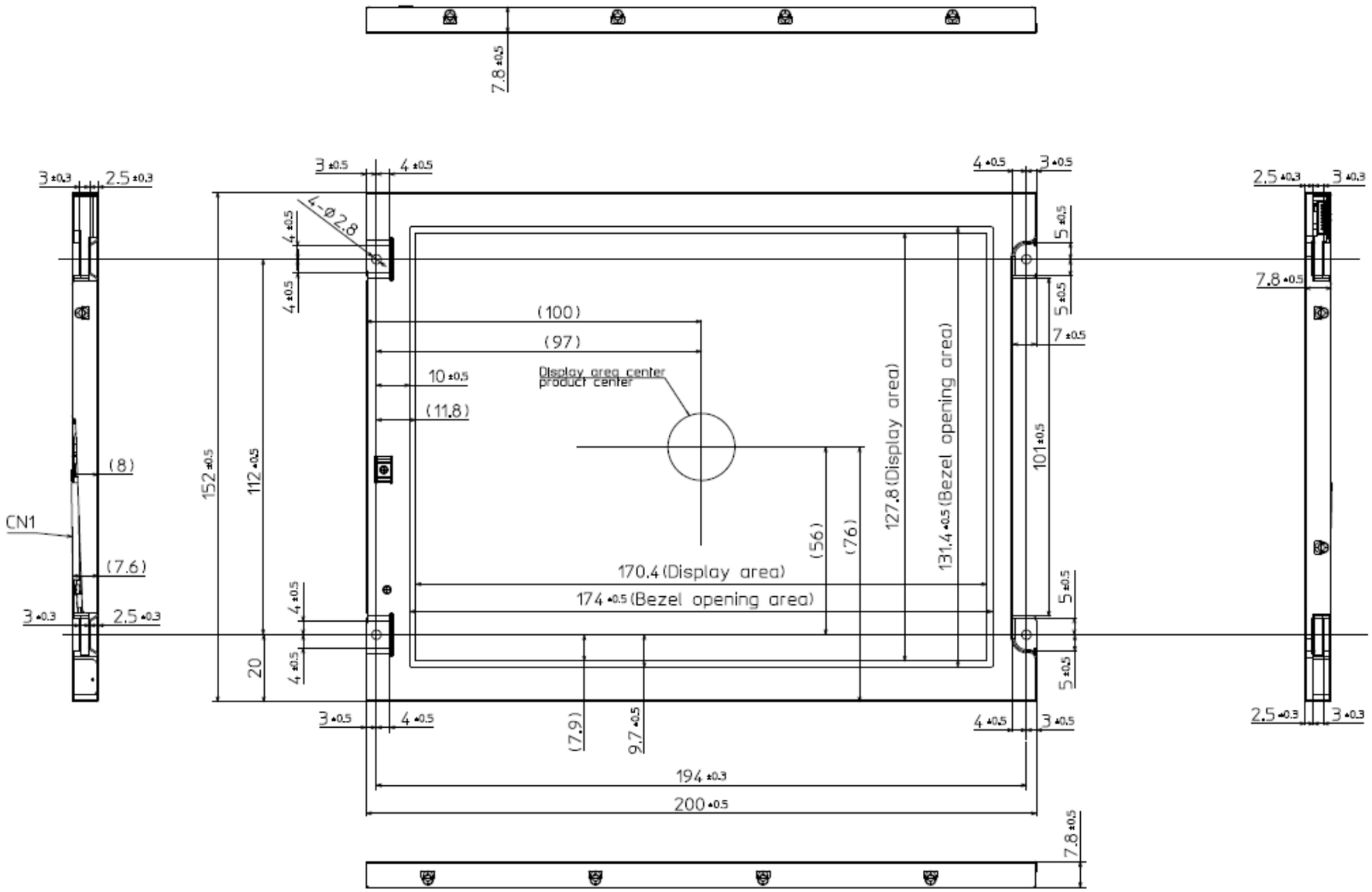

Note1: The values in parentheses are for reference.
Note2: The torque for product mounting screws must never exceed 0.294N·m.

Unit: mm

8.2 REAR VIEW

2

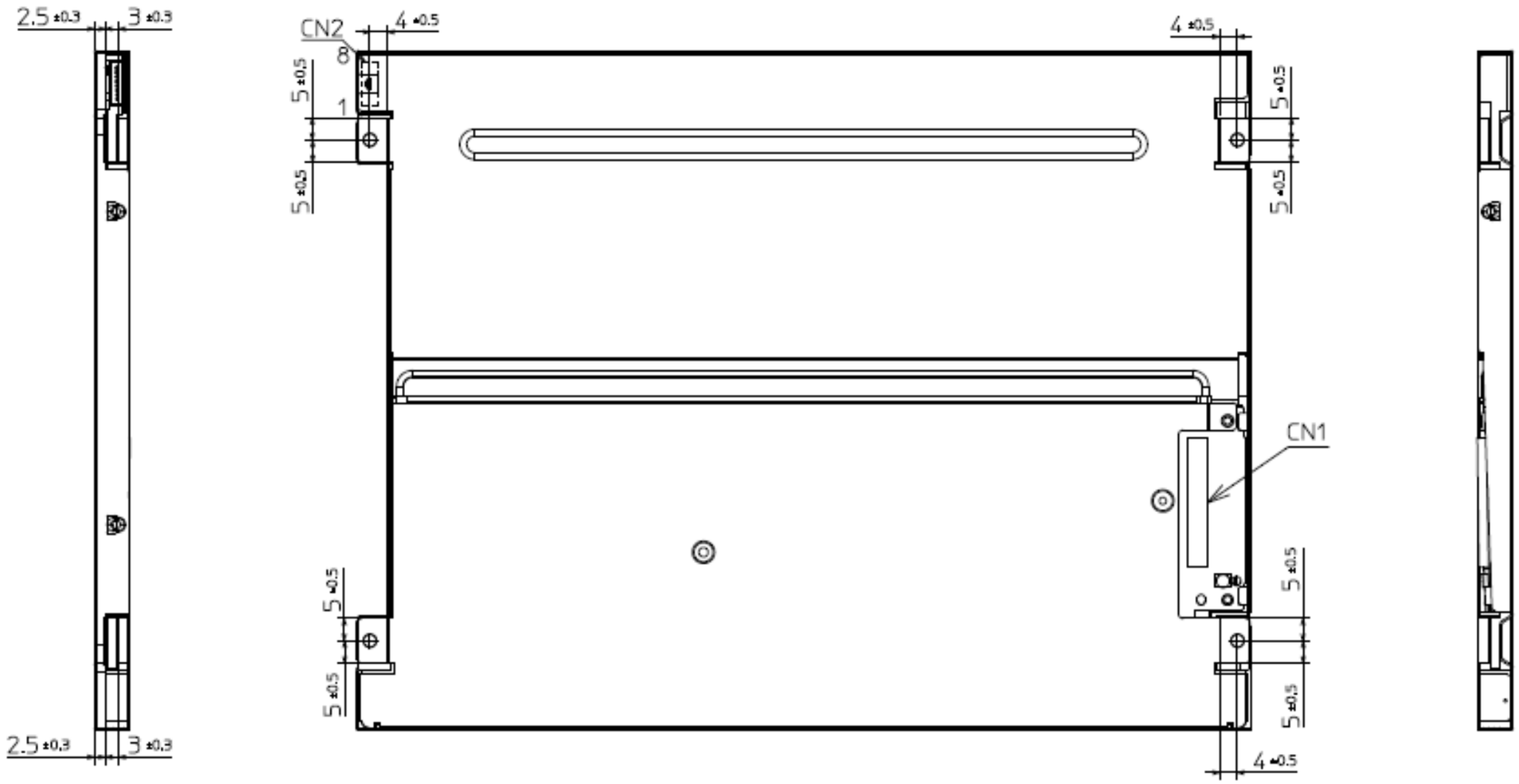

Note1:The value in parentheses are for referrence
Note2:The torque for mounting screws must never exeed 0.294N · m

Unit: mm

REVISION HISTORY

The inside of latest specifications is revised to the clerical error and the major improvement of previous edition. Only a changed part such as functions, characteristic value and so on that may affect a design of customers, are described especially below.

Edition	Document number	Prepared date	Revision contents and signature
1st edition	DOD-PP-0708	Jan. 8, 2009	**Revision contents** New issue **Writer** *Approved by* H. FUKUYOSHI *Checked by* ——— *Prepared by* A. KUMANO
2nd edition	DOD-PP-0909	Jan. 19, 2010	**Revision contents** P4 FEATURES • Color Conversion(Tentative name) (addition) P5 GENERAL SPECIFICATIONS • Weight: (330)g(typ.) → TBD g • Contrast ratio: (600:1)(typ.) →(900:1)(typ.) • Viewing angle: Vertical -Down side 60°(typ.) → 80°(typ.) • Response time: 25ms(typ.) → (18)ms(typ.) • Luminance: At IL= 50mA → At IL= 50mA/One circuit • Backlight: Recommended LED driver board (Option): 104PW03F (addition) • Power consumption: At IL= 50mA → At IL=50mA/One circuit (5.8)W (typ., Power dissipation of the inverter is not included.) → (5.6)W (typ.) P8 MECHANICAL SPECIFICATIONS • Weight: (330) (typ.) → TBD (typ.) P9 LCD panel signal processing board • Power supply current : 360(typ.), 480(max.) →(300)(typ.), (450)(max.) P10 Backlight lamp • Forward Voltage-Remark: at IL= 50mA → at IL=50mA/One circuit P11 Backlight lighting circuit → LED driver board (Option) P12 LCD panel signal processing board: chart (revised) P14 Input data signal: 8bit → Input data signal: 8bit, MAP A P15 Input data signal: 8bit, MAP B (addition) P20 SCANNING DIRECTION: figure (revised) P24 Optical characteristics • Contrast ratio: (600)(typ.) → 900(typ.) • Response time-Ton: 6(typ), 15(max.) → 3(typ), 5(max.) -Toff: 19(typ), 47(max.) → 15(typ), 21(max.) • Viewing angle-Down: 50(min.), 60(typ.) → 70(min.), 80(typ.) • Note2: … IL=50mA, … → … IL=50mA/One circuit, … P26 ESTIMATED LUMINACE LIFE TIME • 25°C (Ambient temperature of LED) → 25°C (Ambient temperature of the product) IL= 50mA → IL= 50mA/One circuit • 70°C (Ambient temperature of LED) → 80°C (Surface temperature at screen) IL= 50mA → IL= 50mA/One circuit P28 CAUTIONS (change of expression) P29 Other • ③ …LED hoider. → …lamp holder set. (correction) • ④ Pay attention … screw.(elimination) P30-P31 Outline Drawings (revised)

REVISION HISTORY

Edition	Document number	Prepared date	Revision contents and signature
2nd edition	DOD-PP-0909	Jan. 19, 2010	**Revision contents** **Signature of writer** *Approved by* T. OGAWA *Checked by* ____ *Prepared by* T. OGAWA