First Edition
Jun 28, 2006

LCD Module Technical Specification

Final Revision
******

Type No. **T-51952D065J-FW-A-ABN**

OPTREX CORPORATION

Apprroved : Shigeo Suzuki
QUALITY ASSURANCE DIVISION

Checked : Noboru Wada
ACI ENGINEERING DIVISION

Prepared : Satoshi Sano
ACI ENGINEERING DIVISION

APPROVED

By _____

Signature :
Date :

Please return this specification within two month with your signature.
If not returned within two month ,specification will be considered
as having been accepted.

Table of Contents

Revision History

Rev.	Date	Page	Comment

1. APPLICATION

This specification applies to color TFT-LCD module, T-51952D065J-FW-A-ABN.

OPTREX does not assume any liability for infringement of patents, copyrights or other intellectual property rights of third parties by or arising from use of a product specified in this document. No license, express, implied or otherwise, is granted under any patents, copyrights or other intellectual property rights of OPTREX or of others.

OPTREX classifies the usage of the TFT-LCD module as follows. Please confirm the usage before using the product.

(1) Standard Usage

Computers, office equipment, factory automation equipment, test and measurement equipment, communications, transportation equipment(automobiles, ships, trains, etc.), provided, however, that operation is not influenced by TFT-LCD directly.

(2) Special Usage

Medical equipment, safety equipment, transportation equipment, provided, however, that TFT-LCD is necessary to its operation.

(3) Specific Usage

Cockpit Equipment, military systems, aerospace equipment, nuclear reactor control systems, life support systems and any other equipment. OPTREX should make a contract that stipulate apportionment of responsibilities between OPTREX and our customer.

The product specified in this document is designed for “Standard Usage” unless otherwise specified in this document. If customers intend to use the product for applications other than those specified for “Standard Usage”, they should contact OPTREX sales representative in advance.

OPTREX has been making continuous effort to improve the reliability of its products. Customers should implement sufficient reliability design of their application equipments such as redundant system design, fail-safe functions, anti-failure features.

OPTREX assumes no responsibility for any damage resulting from the use of the product that does not comply with the instructions and the precautions specified in this document.

Please contact and consult a OPTREX sales representative for any questions regarding this product.

2. OVERVIEW

T-51952D065J-FW-A-ABN is 6.5" color TFT-LCD (Thin Film Transistor Liquid Crystal Display) module composed of LCD panel, driver ICs, control circuit, and backlight unit.

By applying 6 bit digital data 640 × 480, 262K-color images are displayed on the 6.5" diagonal screen. Input power voltages are 3.3 / 5.0V for LCD driving.
The type of data and control signals are digital and transmitted via CMOS interface per Typ. 25 MHz clock cycle.

Inverter for backlight is not included in this module. General specifications are summarized in the following table:

ITEM	SPECIFICATION
Display Area (mm)	132.48(H) × 99.36(V) (6.5-inch diagonal)
Number of Dots	640 × 3 (H) × 480 (V)
Pixel Pitch (mm)	0.207 (H) × 0.207 (V)
Color Pixel Arrangement	RGB vertical stripe
Display Mode	Normally white TN
Number of Color	262K
Luminance (cd/m^2)	600
Wide Viewing Angle Technology	Optical compensation film
Viewing Angle (CR ≥ 10)	−70~70° (H)　−60~50° (V)
Surface Treatment	Anti-glare and hard-coating 3H
Electrical Interface	CMOS
Optimum Viewing Angle (Contrast ratio)	6 o'clock
Module Size (mm)	154.0 (W) × 121.0 (H) × 11.0 (D)
Module Mass (g)	205
Backlight Unit	CCFL, 2-tubes, edge-light, replaceable

Characteristic value without any note is typical value.

3. ABSOLUTE MAXIMUM RATINGS

ITEM	SYMBOL	MIN.	MAX.	UNIT
Power Supply Voltage for LCD	VCC	–0.3	6.5	V
Logic Input Voltage	VI	–0.3	6.5	V
Lamp Voltage	VL	0	2000	Vrms
Lamp Current	IL	0	9.0	mArms
Lamp Frequency	FL	40	100	kHz
Operation Temperature (Panel) Note 1,2)	$T_{op(Panel)}$	–20	70	°C
Operation Temperature (Ambient) Note 2)	$T_{op(Ambient)}$	–20	70	°C
Storage Temperature Note 2)	T_{stg}	–20	80	°C

[Note]

1) Measured at the center of active area and at the center of panel back surface

2) Top,Tstg ≤ 40°C : 90%RH max. without condensation

Top,Tstg > 40°C : Absolute humidity shall be less than the value of 90%RH at 40°C without condensation.

4. ELECTRICAL CHARACTERISTICS

(1) TFT- LCD

Ambient Temperature : Ta = 25°C

ITEM		SYMBOL	MIN.	TYP.	MAX.	UNIT	Remarks
Power Supply Voltage for LCD	3.3V powered	VCC	3.0	3.3	3.6	V	*1)
	5.0V powered	VCC	4.5	5.0	5.5	V	*1)
Power Supply Current for LCD	3.3V powered	ICC	-	200	300	mA	*2)
	5.0V powered	ICC	-	150	200	mA	*2)
Permissive Input Ripple Voltage		VRP	-	-	100	mVp-p	VCC = +3.3V/5.0V
Logic Input Voltage	High	VIH	2.0	-	5.5	V	
	Low	VIL	0	-	0.8	V	

*1) Power and signals sequence:

t1 ≤ 10 ms　　200 ms ≤ t4

0 < t2 ≤ 50 ms　　200 ms ≤ t5

0 < t3 ≤ 50 ms　　0 ≤ t6

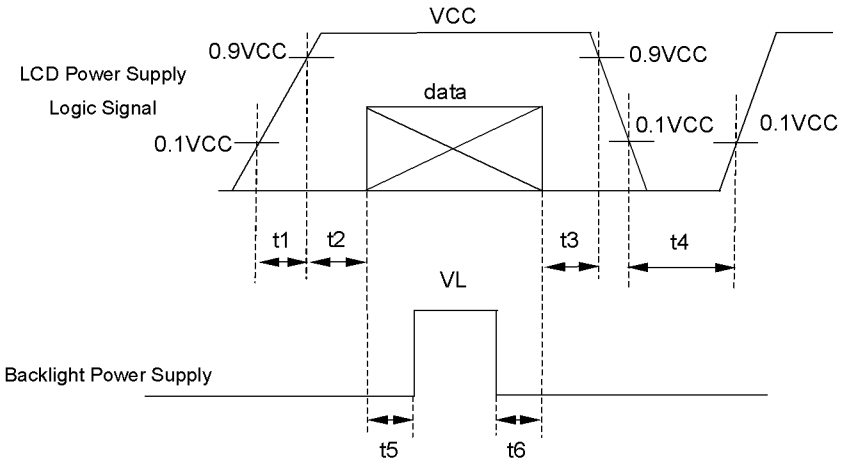

data: RGB DATA, DCLK, HD, VD, DENA

VCC-dip conditions:

(a) 3.3 V powered

1) When 2.4 V ≤ VCC < 3.0 V, td ≤ 10 ms

2) When VCC < 2.4 V

VCC-dip conditions should also follow the power and signals sequence.

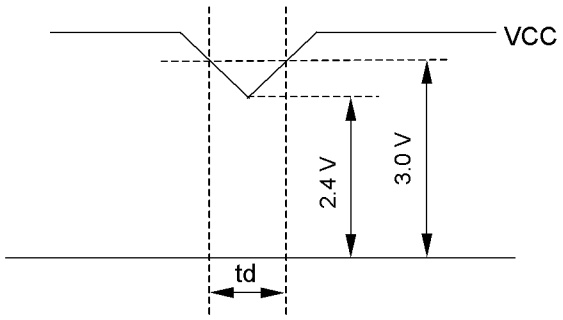

(b) 5.0V powered

1) When 3.6 V ≤ VCC < 4.5 V, td ≤ 10 ms

2) When VCC < 3.6 V

VCC-dip conditions should also follow the power and signals sequence.

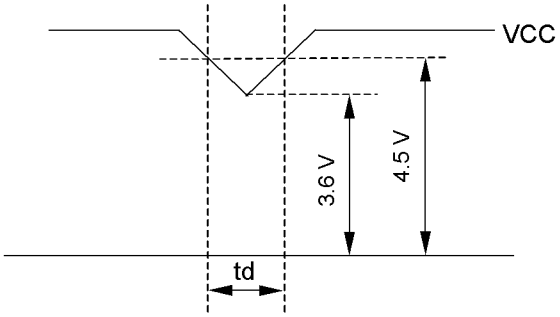

*2) Typical current condition:

64- gray- bar-pattern

480 line mode

VCC = + 3.3 / 5.0 V, f_H=31.5kHz, f_V=60Hz, f_{CLK}= 25MHz

(2) Backlight Ta=25°C

ITEM	SYMBOL	MIN.	TYP.	MAX.	UNIT	Remarks
Lamp Voltage	VL	--	340	--	Vrms	IL=6.0mArms
Lamp Current	IL	3.0	6.0	7.0	mArms	*1),*5)
Lamp Frequency	FL	40	--	80	kHz	*2)
Starting Lamp Voltage	VS	620	--	--	Vrms	Ta=25℃
		930	--	--	Vrms	Ta=0℃
		1000	--	--	Vrms	Ta= –20℃
Lamp Life Time	LT	50000	--	--	h	*3),*4) IL=6.0mArms Continuous Operation

*1) Lamp Current measurement method (The current meter is inserted in low voltage line.)

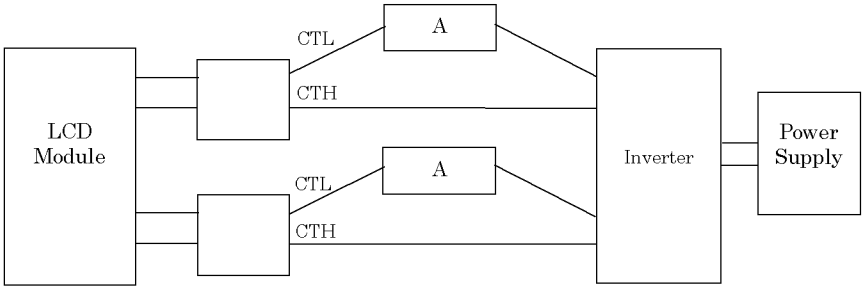

*2) Lamp frequency of inverter may produce interference with horizontal synchronous frequency, and this may cause horizontal beat on the display. Therefore, please adjust lamp frequency, and keep inverter as far from module as possible or use electronic shielding between inverter and module to avoid the interference.

*3) Lamp life time is defined as the time either when the brightness becomes 50% of the initial value, or when the starting lamp voltage does not meet the value specified in this table.

*4) The life time of the backlight depends on the ambient temperature. The life time will decrease under low/high temperature.

*5) Please use the inverter which has symmetrical current wave form as follows,

The degree of unbalance: less than 10%

The ratio of wave height: less than $\sqrt{2} \pm 10\%$

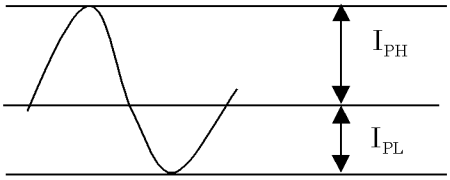

I_{PH}: High side peak

I_{PL}: Low side peak

The degree of unbalance = $| I_{PH} - I_{PL} | / Irms \times 100(\%)$

The ratio of wave height = I_{PH}(or I_{PL}) / Irms

CURRENT WAVE FORM

5. INTERFACE PIN CONNECTION

(1) CN 1(Interface Signal)

Used connector: DF9B-31P-1V(32) (HIROSE)

Corresponding connector: DF9-31S-1V(32) (HIROSE)

Pin No.	Symbol	Function
1	GND	
2	DCLK	Clock signal for sampling catch data signal
3	HD	Horizontal sync signal
4	VD	Vertical sync signal
5	GND	
6	R0	Red data signal(LSB)
7	R1	Red data signal
8	R2	Red data signal
9	R3	Red data signal
10	R4	Red data signal
11	R5	Red data signal(MSB)
12	GND	
13	G0	Green data signal(LSB)
14	G1	Green data signal
15	G2	Green data signal
16	G3	Green data signal
17	G4	Green data signal
18	G5	Green data signal(MSB)
19	GND	
20	B0	Blue data signal(LSB)
21	B1	Blue data signal
22	B2	Blue data signal
23	B3	Blue data signal
24	B4	Blue data signal
25	B5	Blue data signal(MSB)
26	GND	
27	DENA	Data enable signal (to settle the viewing area)
28	VCC	3.3 / 5.0 V Power Supply
29	VCC	3.3 / 5.0 V Power Supply
30	TEST	This pin should be open. Test signal output for only internal test use.
31	SC	Scan direction control (Low=Normal, High=Reverse)

*) The shielding case is connected with GND

(2) CN 2 , CN 3 (Backlight)

Backlight-side connector: BHR-02(8.0)VS-1N (JST)

Inverter-side connector: SM02(8.0)B-BHS(LF)(SN) (JST)

Pin No.	Symbol	Function
1	CTH	VBLH (High Voltage)
2	CTL	VBLL (Low Voltage)

[Note]

VBLH-VBLL=VL

6. INTERFACE TIMING

(1) Timing Specifications

ITEM		SYMBOL	MIN.	TYP.	MAX.	UNIT
DCLK	Frequency	f_{CLK}	20	25	30	MHz
	Period	t_{CLK}	33.3	40	50	ns
	Low Width	t_{WCL}	10	--	--	ns
	High Width	t_{WCH}	10	--	--	ns
DATA (R,G,B),DENA, HD,VD	Set up time	t_{Ds}	4	--	--	ns
	Hold time	t_{Dh}	4	--	--	ns
DENA	Horizontal Active Time	t_{HA}	640	640	640	t_{CLK}
	Horizontal Front Porch	t_{HFP}	0	16	--	t_{CLK}
	Horizontal Back Porch	t_{HBP}	2	144	--	t_{CLK}
	Vertical Active Time	t_{VA}	480	480	480	t_H
	Vertical Front Porch	t_{VFP}	3	10	--	t_H
	Vertical Back Porch	t_{VBP}		35	--	t_H
HD	Frequency	f_H	27	31.5	38	kHz
	Period	t_H	26.3	31.7	37.0	□s
	Low Width	t_{WHL}	2	96	--	t_{CLK}
VD	Frequency	f_V	55	60	70	Hz
	Period	t_V	14.3	16.7	18.2	ms
	Low Width	t_{WVL}	1	2	--	t_H

[Note]

1) DATA is latched at fall edge of DCLK in this specification.
2) Polarities of HD and VD are negative in this specification.
3) DENA (Data Enable) should always be positive polarity as shown in the timing specification.
4) DCLK should appear during all invalid period, and HD should appear during invalid period of frame cycle.
5) $t_{HFP} + t_{HBP} \geq 20\ t_{CLK}$

(2) Timing Chart

a. Pixel Timing Chart

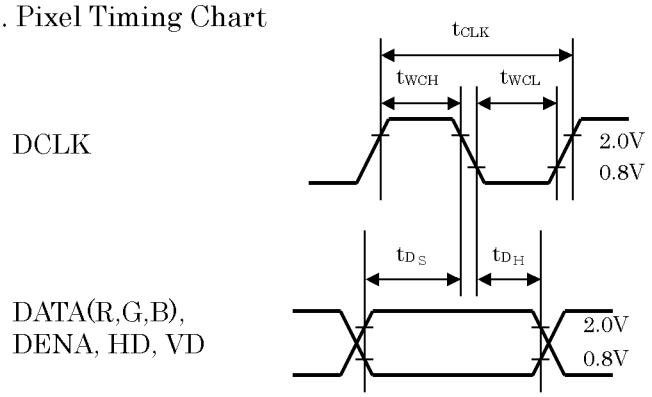

b. Horizontal Timing Chart

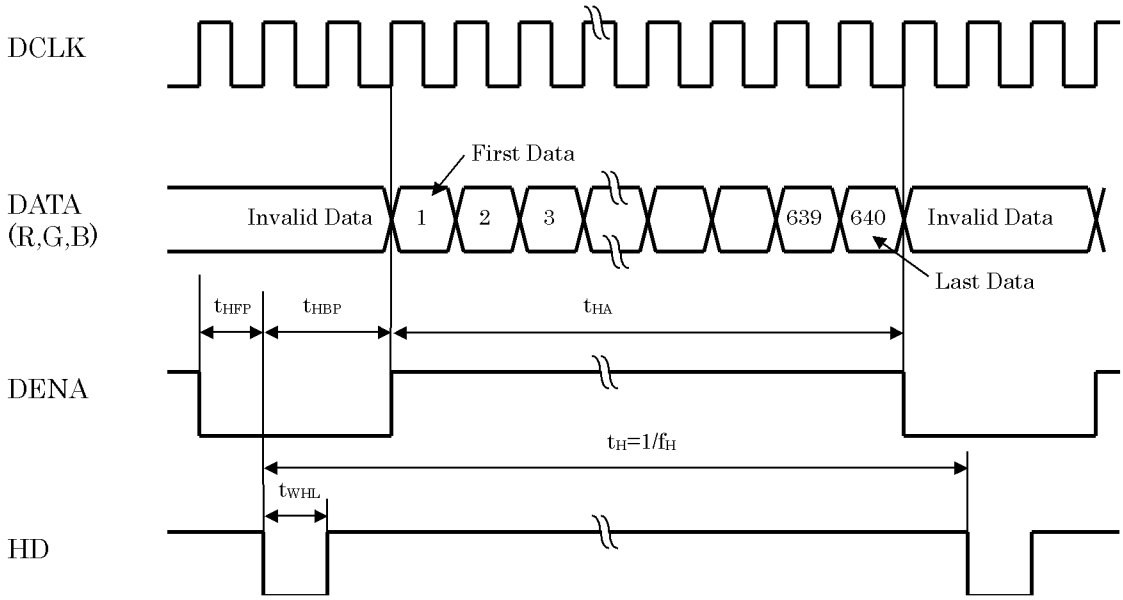

c. Vertical Timing Chart

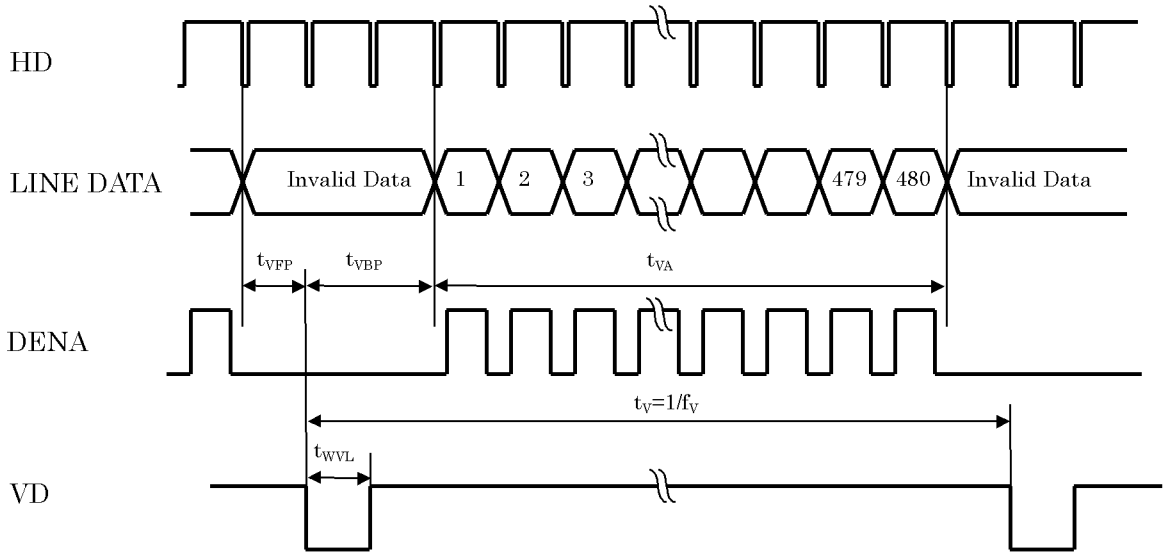

(3) Color Data Assignment

COLOR		INPUT DATA																	
		R DATA						G DATA						B DATA					
		R5	R4	R3	R2	R1	R0	G5	G4	G3	G2	G1	G0	B5	B4	B3	B2	B1	B0
		MSB					LSB	MSB					LSB	MSB					LSB
BASIC COLOR	BLACK	0	0	0	0	0	0	0	0	0	0	0	0	0	0	0	0	0	0
	RED(63)	1	1	1	1	1	1	0	0	0	0	0	0	0	0	0	0	0	0
	GREEN(63)	0	0	0	0	0	0	1	1	1	1	1	1	0	0	0	0	0	0
	BLUE(63)	0	0	0	0	0	0	0	0	0	0	0	0	1	1	1	1	1	1
	CYAN	0	0	0	0	0	0	1	1	1	1	1	1	1	1	1	1	1	1
	MAGENTA	1	1	1	1	1	1	0	0	0	0	0	0	1	1	1	1	1	1
	YELLOW	1	1	1	1	1	1	1	1	1	1	1	1	0	0	0	0	0	0
	WHITE	1	1	1	1	1	1	1	1	1	1	1	1	1	1	1	1	1	1
RED	RED(1)	0	0	0	0	0	1	0	0	0	0	0	0	0	0	0	0	0	0
	RED(2)	0	0	0	0	1	0	0	0	0	0	0	0	0	0	0	0	0	0
	RED(62)	1	1	1	1	1	0	0	0	0	0	0	0	0	0	0	0	0	0
	RED(63)	1	1	1	1	1	1	0	0	0	0	0	0	0	0	0	0	0	0
GREEN	GREEN(1)	0	0	0	0	0	0	0	0	0	0	0	1	0	0	0	0	0	0
	GREEN(2)	0	0	0	0	0	0	0	0	0	0	1	0	0	0	0	0	0	0
	GREEN(62)	0	0	0	0	0	0	1	1	1	1	1	0	0	0	0	0	0	0
	GREEN(63)	0	0	0	0	0	0	1	1	1	1	1	1	0	0	0	0	0	0
BLUE	BLUE(1)	0	0	0	0	0	0	0	0	0	0	0	0	0	0	0	0	0	1
	BLUE(2)	0	0	0	0	0	0	0	0	0	0	0	0	0	0	0	0	1	0
	BLUE(62)	0	0	0	0	0	0	0	0	0	0	0	0	1	1	1	1	1	0
	BLUE(63)	0	0	0	0	0	0	0	0	0	0	0	0	1	1	1	1	1	1

[Note]

1) Definition of gray scale

Color (n) ---n indicates gray scale level.

Higher n means brighter level.

2) Data

1:High, 0: Low

(4) Display Position and Scan Direction

D(X,Y) shows the data number of input signal for LCD panel signal processing PCB.

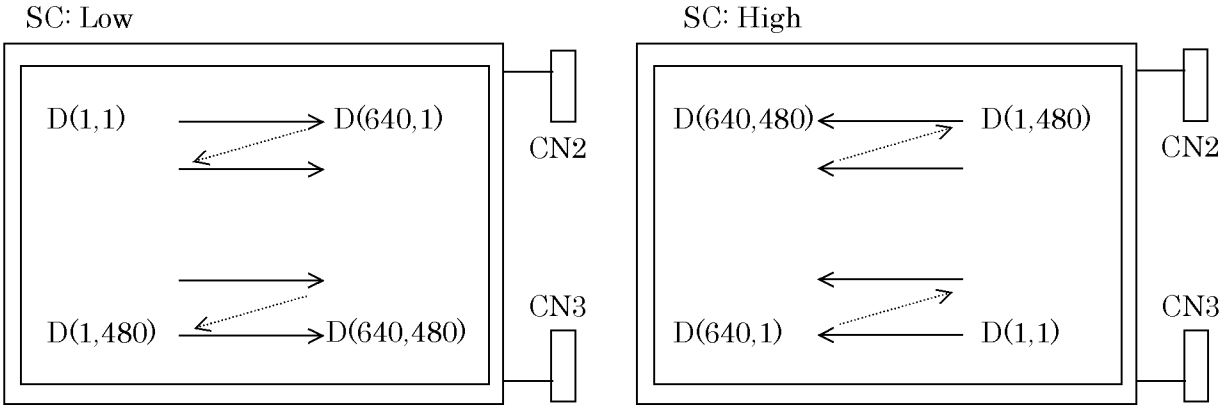

7. BLOCK DIAGRAM

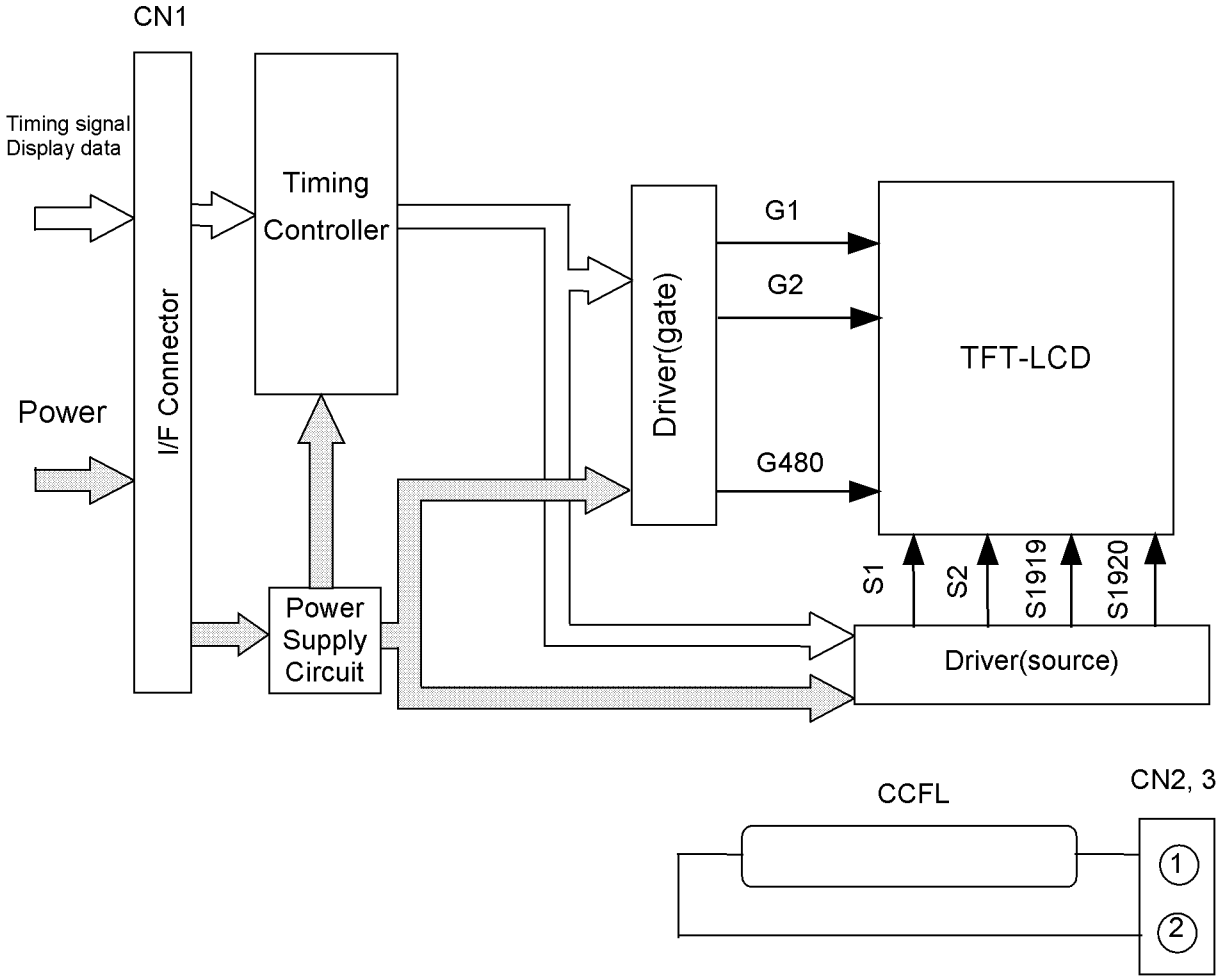

8. MECHANICAL SPECIFICATIONS

(1) Front Side

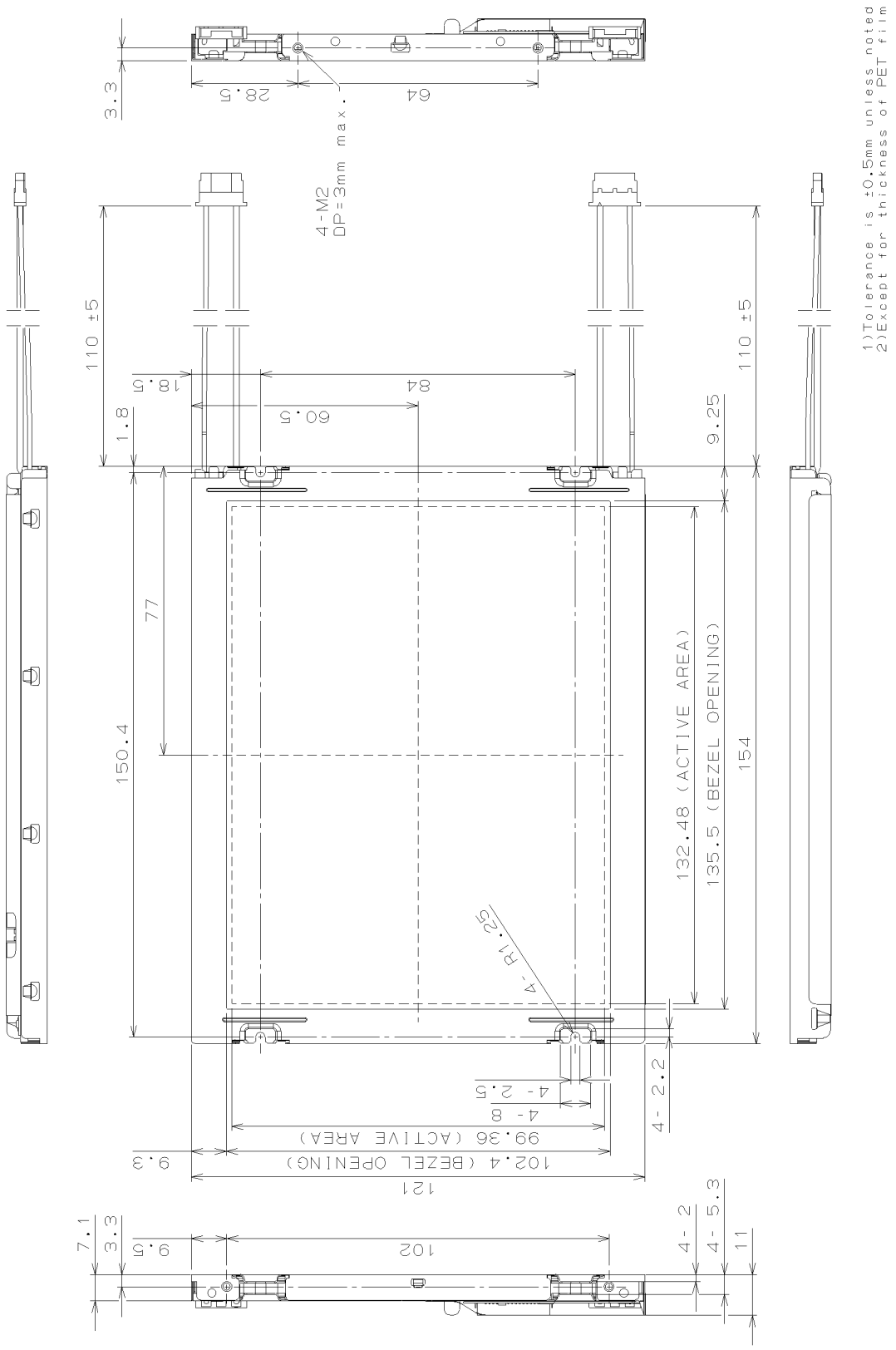

(Unit:mm)

(2) Rear Side

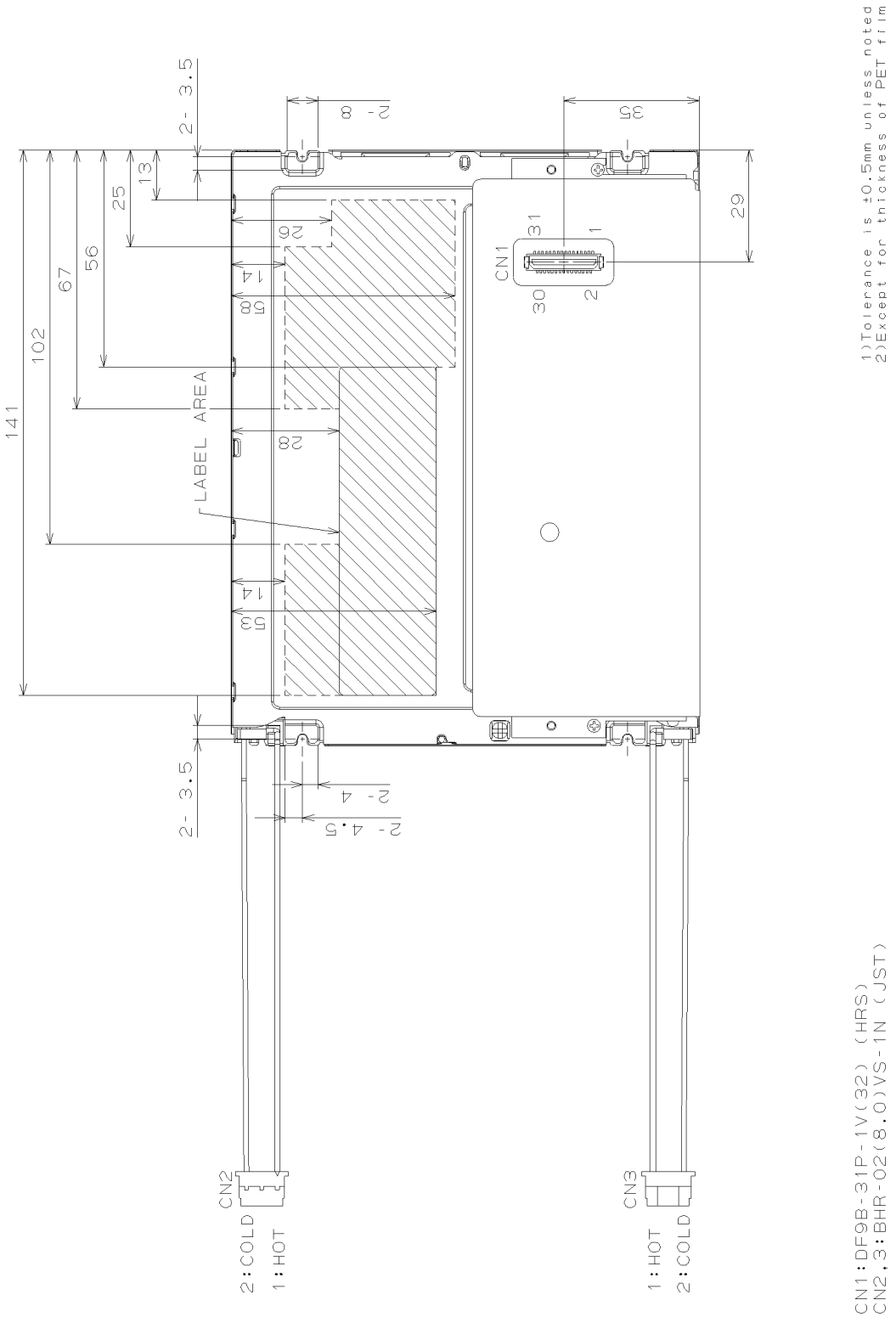

(Unit:mm)

[Note]

We recommend you referring to the detailed drawing for your design.

Please contact our company sales representative when you need the detailed drawing.

9. OPTICAL CHARACTERISTICS

Ta=25°C, VCC=3.3 / 5.0 V, Input Signals: Typ. Values shown in Section 6

ITEM		SYMBOL	CONDITION	MIN.	TYP.	MAX.	UNIT	Remarks
Contrast Ratio		CR	θ_V=0°, θ_H=0°	500	700	--	--	*1)*2)*5)
Luminance		Lw	θ_V=0°, θ_H=0°	500	600	--	cd/m^2	*1)*5)
Luminance Uniformity		ΔLw	θ_V=0°, θ_H=0°	--	--	30	%	*1)*3)*5)
Response Time		tr	θ_V=0°, θ_H=0°	--	6	--	ms	*1)*4)*5)
		tf	θ_V=0°, θ_H=0°	--	19	--	ms	*1)*4)*5)
Viewing Angle	Horizontal	θ_H	CR ≥ 10	–50~50	–70~70	--	°	*1)*5)
	Vertical	θ_V		–40~30	–60~50	--	°	*1)*5)
	Horizontal	θ_H	CR ≥ 5	–70~70	–80~80	--	°	*1)*5)
	Vertical	θ_V		–70~60	–80~70	--	°	*1)*5)
Image Sticking		tis	2 h	--	--	2	s	*6)
Color Coordinates	Red	Rx	θ_V=0°, θ_H=0°	0.553	0.583	0.613	--	*1)*5)
		Ry		0.303	0.333	0.363		
	Green	Gx		0.300	0.330	0.360		
		Gy		0.509	0.539	0.569		
	Blue	Bx		0.135	0.165	0.195		
		By		0.143	0.173	0.203		
	White	Wx		0.292	0.322	0.352		
		Wy		0.308	0.338	0.368		

[Note]

These items are measured using CS1000(MINOLTA) for color coordinates, EZContrast(ELDIM) for viewing angle and CS1000 or BM-5A(TOPCON) for others under the dark room condition (no ambient light) after more than 30 minutes from turning on the lamp unless noted.

Condition: IL=6.0 mArms, FL=55 kHz

Measurement method for luminance and color coordinates is as follows.

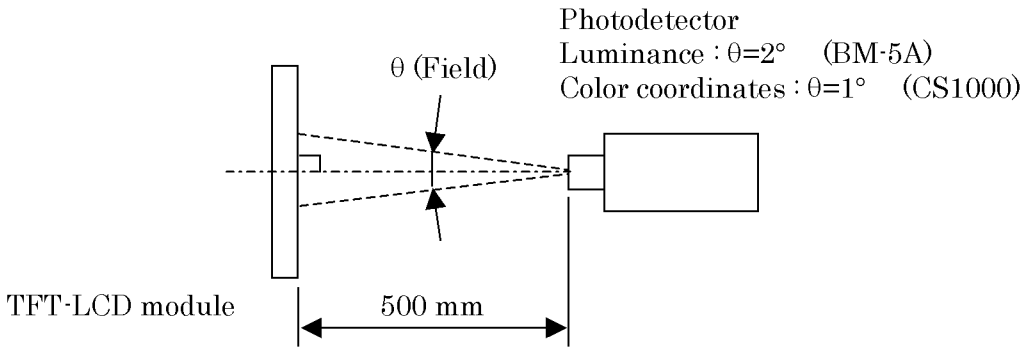

The luminance is measured according to FLAT PANEL DISPLAY MEASUREMENTS STANDARD (VESA Standard).

*1) Measurement Point

Contrast Ratio, Luminance, Response Time, Viewing Angle, Color Coordinates: Display Center

Luminance Uniformity: point 1~5 shown in a figure below

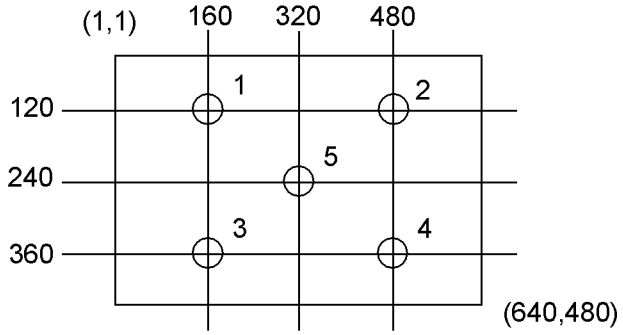

*2) Definition of Contrast Ratio

CR=Luminance with all white pixels / Luminance with all black pixels

*3) Definition of Luminance Uniformity

$\Delta Lw=[Lw(MAX)/Lw(MIN)-1] \times 100$

*4) Definition of Response Time

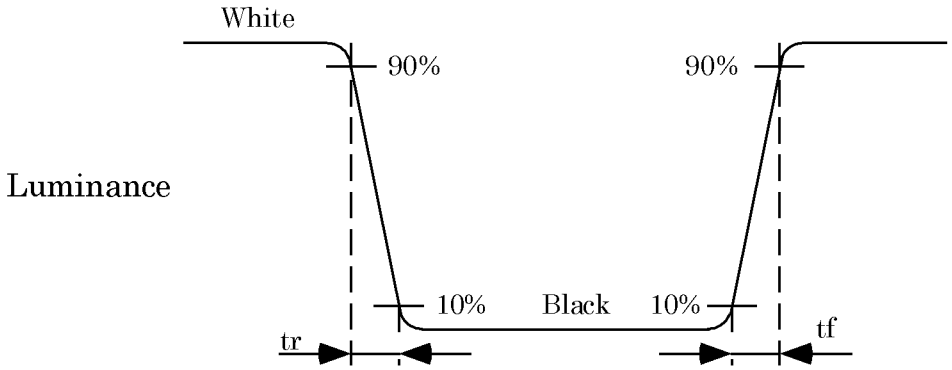

*5) Definition of Viewing Angle (θ_V, θ_H)

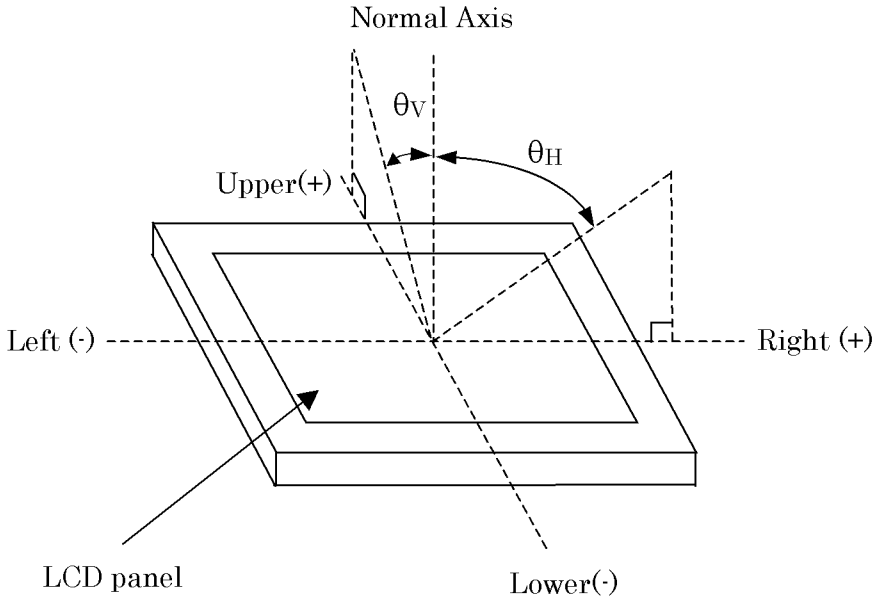

*6) Image Sticking

Continuously display the test pattern shown in the figure below for two-hours. Then display a completely white screen. The previous image shall not persist more than two seconds at 25°C.

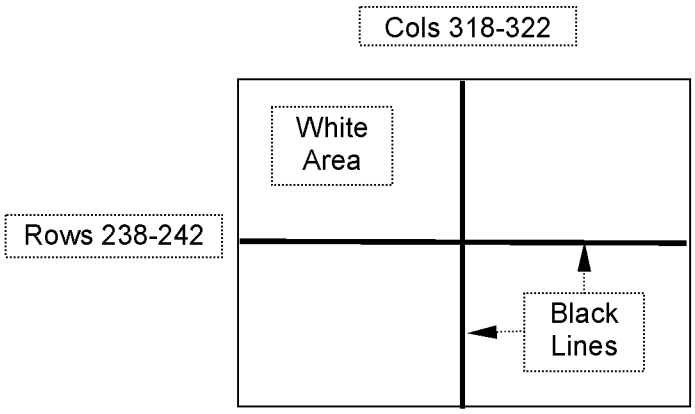

TEST PATTERN FOR IMAGE STICKING TEST

10. RELIABILITY TEST CONDITION

(1) Temperature and Humidity

ITEM	CONDITIONS
HIGH TEMPERATURE HIGH HUMIDITY OPERATION	40°C, 90%RH, 240 h (No condensation)
HIGH TEMPERATURE OPERATION	70°C, 240 h
LOW TEMPERATURE OPERATION	–20°C, 240 h
HIGH TEMPERATURE STORAGE	80°C, 240 h
LOW TEMPERATURE STORAGE	–20°C, 240 h
THERMAL SHOCK (NON-OPERATION)	BETWEEN –20°C (1h) and 80°C(1h), 100 CYCLES

(2) Shock & Vibration

ITEM	CONDITIONS
SHOCK (NON-OPERATION)	Shock level: 1470m/s^2 (150G) Waveform: half sinusoidal wave, 2ms Number of shocks: one shock input in each direction of three mutually perpendicular axis for a total of six shock inputs
VIBRATION (NON-OPERATION)	Vibration level: 9.8m/s^2 (1.0G) Waveform: sinusoidal Frequency range: 5 to 500Hz Frequency sweep rate: 0.5 octave /min Duration: one sweep from 5 to 500 Hz in each of three mutually perpendicular axis(total 3 hours)

(3) Judgment standard

The judgment of the above tests should be made as follow:

Pass: Normal display image, no damage of the display function. (ex. no line defect)
Partial transformation of the module parts should be ignored.

Fail: No display image, damage of the display function. (ex. line defect)