Version : ***0.2***

TECHNICAL SPECIFICATION

MODEL NO. : PA079DS1

☐Customer's Confirmation

Customer Name _____

Date _____

By _____

☐PVI's Confirmation

Confirmed By _____

Prepared By _____

Date : Mar. 13,2001

This technical specification is subject to change without notice.

Please return 1 copy with your signature on this page for approval.

TECHNICAL SPECIFICATION

CONTENTS

0. Application

This technical specification applies to 7.9” color TFT-LCD module1,PA079DS1.The applications of the panel are car TV, portable DVD , Video Display, multimedia applications and others AV system.

2. Features

. Compatible with NTSC & PAL system

. Pixel in stripe configuration

. Slim and compact

. Dual lamp design to make high picture brightness

. Image Reversion：Up/Down and Left/Right

3. Mechanical Specifications

Parameter	Specifications	Unit
Screen Size	7.9 (diagonal)	inch
Display Format	1440(H)× 234(V)	dot
Active Area	161.28 (H)× 117.936 (V)	mm
Dot Pitch	0.112(H)× 0.504 (V)	mm
Pixel Configuration	Stripe	
Outline Dimension	191.4 (W)× 144.6 (H)× 11.5 (D)(Typ.)	mm
Surface treatment	Anti-glare and hard coating	
Weight	365±10	g

4. Mechanical Drawing of TFT-LCD Module

REV.	ECN NO.	DESCRIPTION	DESIGN	CHECK	APPROVE	DATE
X1	XXXXXX	FOR SAMPLE RELEASE				. .

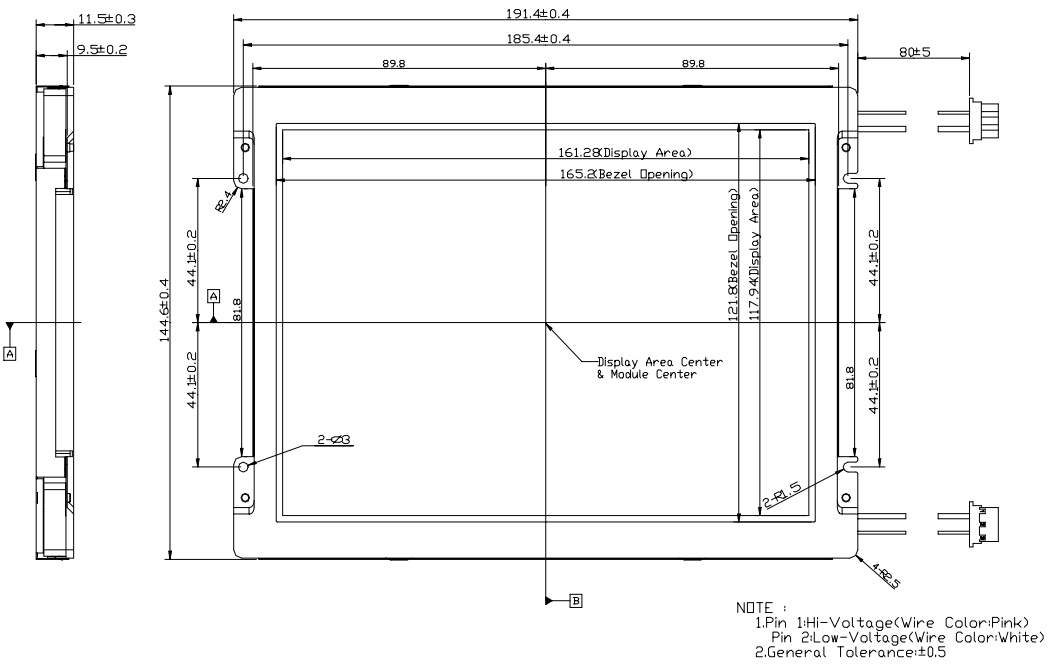

MATERIAL	HEAT & SURFACE TREATMENT	Prime View International Co.,Ltd.				
APPROVE	XXXXX	SCALE 1/1	UNIT mm	PROJECTION METHOD	DWG. NAME LCD MODULE , 080	
DESUGN	M.J.Chuang	ORIGINAL MODEL			DWG. NO.	REV. / SHT.
DATE	00'09.21	PA079DS1T1			M001-001	01 / 1/2

REV.	ECN NO.	DESCRIPTION	DESIGN	CHECK	APPROVE	DATE
X1	XXXXXX	FOR SAMPLE RELEASE				. .

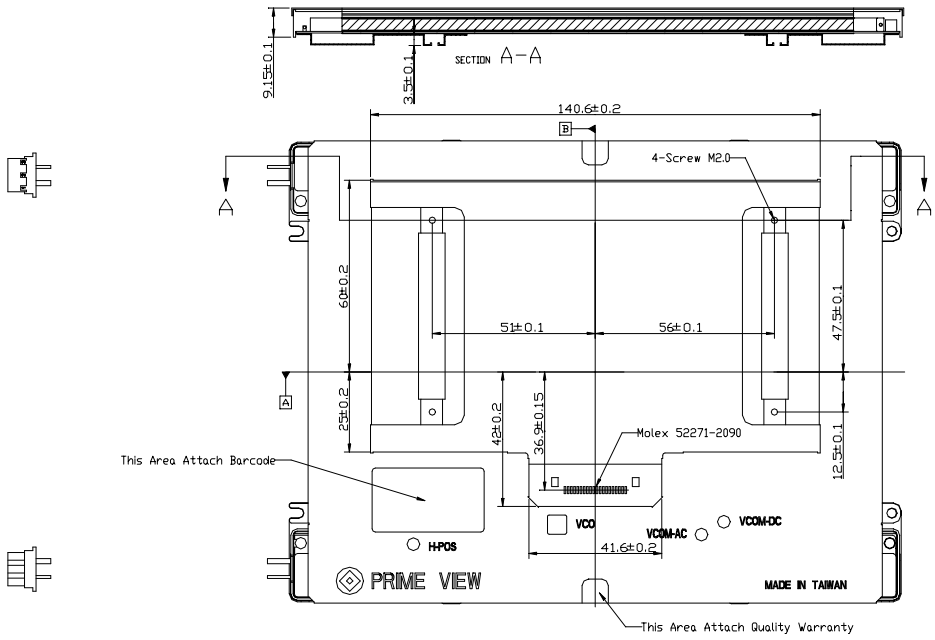

MATERIAL	HEAT & SURFACE TREATMENT	Prime View International Co.,Ltd.				
APPROVE	XXXXX	SCALE 1/1	UNIT mm	PROJECTION METHOD	DWG. NAME LCD MODULE , 080	
DESIGN	M.J.Chuang	ORIGINAL MODEL			DWG. NO.	REV. / SHT.
DATE	00'09.21	PA079DS1T1			M001-001	01 / 2/2

5. Input / Output Terminals

5-1) TFT-LCD Panel Driving

Pin No	Symbol	I/O	Description	Remark
1	$\overline{HSY}$	I/O	Horizontal Sync. Input / Output	Note 5-1
2	FRP	O	Video Polarity Alternating Signal	
3	CSY	I	Composite Sync. Signal	Note 5-1
4	V_{GH}	I	Supply Voltage for Gate Driver (Hi level)	Note 5-2
5	V_{GL}	I	Supply Voltage for Gate Driver (Low level)	Note 5-3
6	V_B	I	Video Signal (Blue)	
7	V_R	I	Video Signal (Red)	
8	V_G	I	Video Signal (Green)	
9	GND	I	Ground	
10	V_{DD}	I	Supply voltage for Controller	Note 5-4
11	V_{CC}	I	Supply voltage for source driver	Note 5-5
12	GND	I	Ground	
13	CKC	I	Control pin for select I/O signal	Note 5-1
14	$\overline{VSY}$	I/O	Vertical Sync. Input/ Output	Note 5-1
15	PSI	O	Synchronize Pulse for Decoder	
16	PSC	O	Synchronize Pulse for DC-DC Converter	
17	NC	-	No Connection	
18	UD	I	UP/DOWN Control	Note 5-7
19	RL	I	Right/Left Shift Control	Note 5-6
20	NP	I	NTSC/PAL Input	Note 5-8

Note 5-1：Pin 13 (CKC) can select the function for Pin 1 ($\overline{HSY}$), Pin 3 (CSY), and Pin 14 ($\overline{VSY}$) .

Pin 13 (CKC)	**Pin 1 (** $\overline{HSY}$ **)**	**Pin 3** (CSY)	**Pin 14 (** $\overline{VSY}$ **)**
Hi	$\overline{HSY}$ Output	CSY Input	$\overline{VSY}$ Output
Low	External Horizontal Sync Input	External Clock Input	External Vertical Sync Input

Note 5-1-1: CKC= High:

a. If CKC=1,the phase lock loop (PLL) is adopted in the LCD module.

b. Inputs CSY, the controller of LCD module will separate the Vertical Sync and Horizontal Sync from CSY.

c. Output Horizontal Sync ($\overline{HSY}$, Pin 1) and Vertical Sync ($\overline{VSY}$, Pin 14)..

d. The internal detect will detect Vertical Sync to reset the vertical counter.

Note 5-1-2: CKC= Low (VGA mode)

a. If CKC=0, the phase lock loop (PLL) is not adopted in the LCD module.
b. If CKC=0, the external clock input frequency of Pin 3 is 25.175 MHz.
c. Input external Horizontal Sync (Pin 1) to synchronize the LCD module. External Horizontal Sync and External Vertical Sync input pulse can be high going or low going.

0. The cycle of external Horizontal Sync input is 31.8μs. The cycle of external Vertical Sync input is 525H.

Note 5-1-3: If there is any question about CKC=0, please contact PVI.

Note 5-2：V_{GH} TYP.＝+17V

Note 5-3：V_{GL} TYP.＝-15V

Note 5-4：V_{DD}TYP.＝+5V

Note 5-5：V_{CC} TYP.＝+5V

Note 5-6 : Low (0V) for shift Right; Input Hi (+5.0V) for inverse (shift Left).

Note 5-7 : Hi (+5.0V) for DOWN; Low (0V) for UP.

Note 5-8 : PAL= LOW(0V),NTSC= Hi(+5.0V)

	Low	High
Note5-6	Right	Left
Note5-7	Down	Up
Note5-8	PAL	NTSC

5-2) Backlight driving

Pin No	Symbol	Description	Remark
1	VL1	Input terminal (Hi voltage side)	Wire color: pink
2	NC	NO Connection	
3	VL2	Input terminal (Low voltage side)	Wire color: white Note 5-9

Note 5-9：Low voltage side of backlight inverter connects with Ground of inverter circuits.

5-3) Input / Output Connector

0. LCD Module Connector
6200-20P (Molex)
FFC Down Connector
20 Pins
Pitch：1.0 mm

B) Backlight Connector

JST BHR-03VS-1
Pin No.：3
Pitch：4 mm

Pink: High Voltage
White: Low Voltage

6. Absolute Maximum Ratings:

GND = 0 V， Ta = 25 ℃

Parameter		Symbol	MIN.	MAX.	Unit	Remark
Supply Voltage For Source Driver		V_{CC}	-0.5	7	V	
		V_{DD}	-0.5	7	V	
Supply Voltage For Gate Driver		V_{GH}- V_{GL}	-0.3	40	V	
	H Level	V_{GH}	0	40	V	
	L Level	V_{GL}	-20	0	V	
Analog Signal Input Level		V_R,V_G,V_B	-0.3	7.0	V	
Digital Input Signals			-0.3	5.5	V	Note 6-1
Digital Output Signals			-0.3	5.5	V	Note 6-2
Storage Temperature			-30	+80	℃	
Operation Temperature			-20	+70	℃	

Note 6-1 : $\overline{HSY}$, CSY, $\overline{VSY}$, CKC,

Note 6-2 : $\overline{HSY}$, $\overline{VSY}$, PSI, PSC

7. Electrical Characteristics

7-1) Recommended Operating Conditions:

0. Driving for TFT-LCD Panel

GND = 0V， Ta = 25 ℃

Parameter		Symbol	MIN.	Typ	MAX	Unit	Remark
Supply Voltage For Source Driver	Analog	V_{CC}	4.5	5.0	5.5	V	
	Logic	V_{DD}	4.5	5.0	5.5	V	
Supply Voltage For Gate Driver	H level	V_{GH}	+15	+17	+19	V	
	L level	V_{GL}	-16	-15	-14	V	
Supply Voltage For controller		V_{DD}	4.5	5.0	5.5	V	
Analog Signal input Level	Amplitude		0.3		V_{CC}-0.3	V	
Digital input voltage	H level	V_{IH}	0.7 V_{DD}	-	V_{DD}	V	
	L level	V_{IL}	-0.3	-	0.3 V_{DD}	V	
Digital output voltage	H level	V_{OH}	0.7 V_{DD}	-	V_{DD}	V	
	L level	V_{OL}	-0.3	-	0.3 V_{DD}	V	

B) Driving for backlight Ta= 25 ℃

Parameter	Symbol	Min.	Typ.	Max.	Unit	Remark
Lamp voltage	V_L		400		Vrms	I_L= 6 mA
Lamp current	I_L	3.5	6	8	mA	
Lamp frequency	P_L		60		KHz	Note 7-1
Kick-off voltage(25℃)	Vs	TBD	TBD	750	Vrms	Note 7-2
Kick-off voltage(0℃)	Vs	TBD	TBD	950	Vrms	Note 7-2

Note 7-1 : The wave form of lamp driving voltage should be as closed to a perfect SIN wave as possible.

Note 7-2 : The Kick-off times≧1sec

7-2) Power Consumption Ta= 25 ℃

Parameter	Symbol	Conditions	TYP.	MAX	Unit	Remark
Supply current for Gate Driver (Hi level)	I_{GH}	V_{GH} = +17V	0.15	0.2	mA	
Supply current for Gate Driver (Low level)	I_{GL}	V_{GL} = -15V	20	30	mA	
Supply current for Source Driver	I_{CC}	V_{CC}= +5V	20	30	mA	
Supply current for controller	I_{DD}	V_{DD} = +5V	20	30	mA	
LCD Panel Power Consumption			0.51		W	Note 7-3
Backlight Lamp Power Consumption			4.8		W	Note 7-4

Note 7-3：The power consumption for backlight is not included.

Note 7-4：Backlight lamp power consumption is calculated by $I_L \times V_L$.

7-3) Input / Output signal timing chart

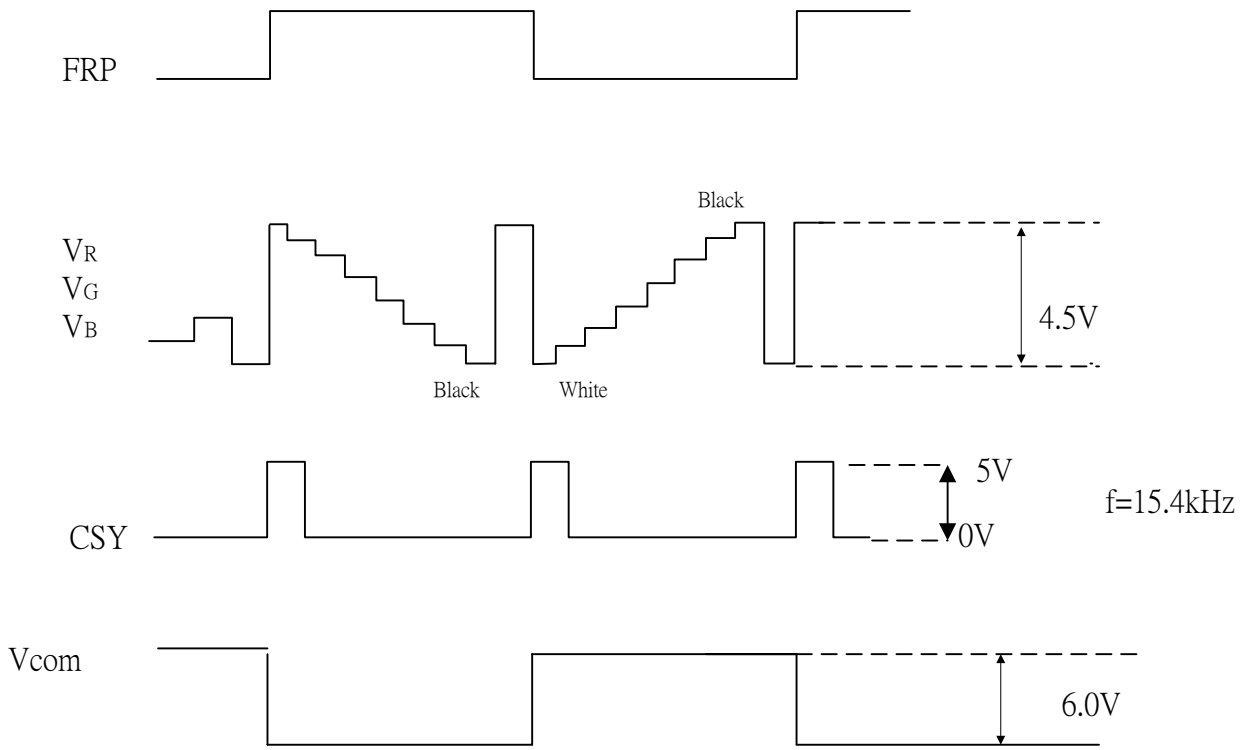

Parameter			Symbol	MIN.	TYP.	MAX.	Unit	Remarks
Horizontal Sync. Output Pulse	Frequency	NTSC	$F_{HO}(N)$	-	15.73	-	KHz	
		PAL	$F_{HO}(P)$	-	15.63	-	KHz	
	Pulse Width		T_{HO}	4.4	4.7	5.0	μs	
	Phase Difference		T_{HP}	0	2	-	μs	
	Rising Time		T_{HR}	-	-	0.05	μs	
	Falling Time		T_{HF}	-	-	0.05	μs	
Vertical Sync. Output Pulse	Frequency	NTSC			fh/262.5			
		PAL			fh/312.5			
	Pulse Width		T_{VO}	-	4H	-	μs	
	Phase Difference	NTSC	$T_{VPO(N)}$	-	2H	-	μs	odd field
		PAL	$T_{VPO(P)}$	-	1H	-		
	Phase Difference	NTSC	$T_{VPE(N)}$	-	1.5H	-	μs	even field
		PAL	$T_{VPE(P)}$	-	0.5H	-		

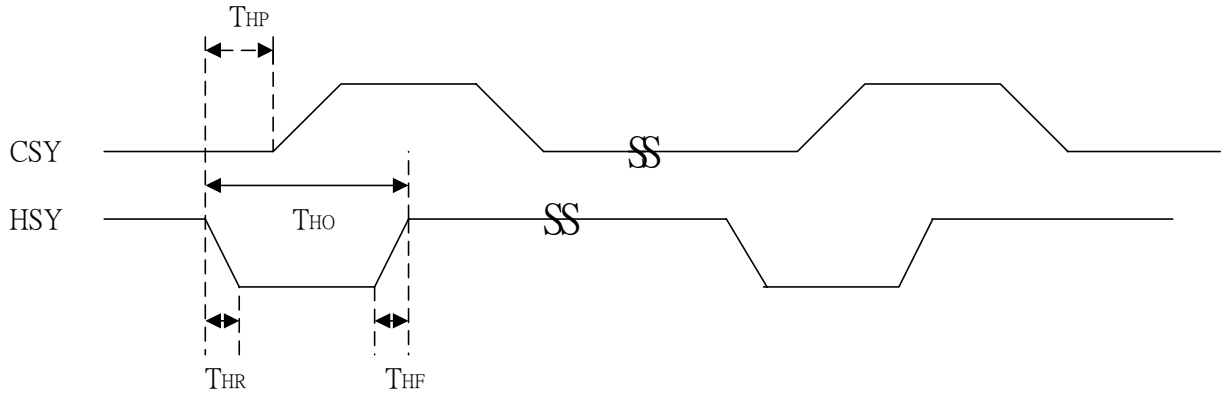

7-4) Display Time Range

A) When sync. Signal of NTSC system is applied.

a) Horizontally

11.35 ~ 61.36 μs.

b) Vertical

22 ~ 255 H

0. When sync. Signal of PAL system is applied.

a) Horizontally

11.54 ~ 61.9 μs

0. Vertical

28 ~ 300 H

0. NTSC System

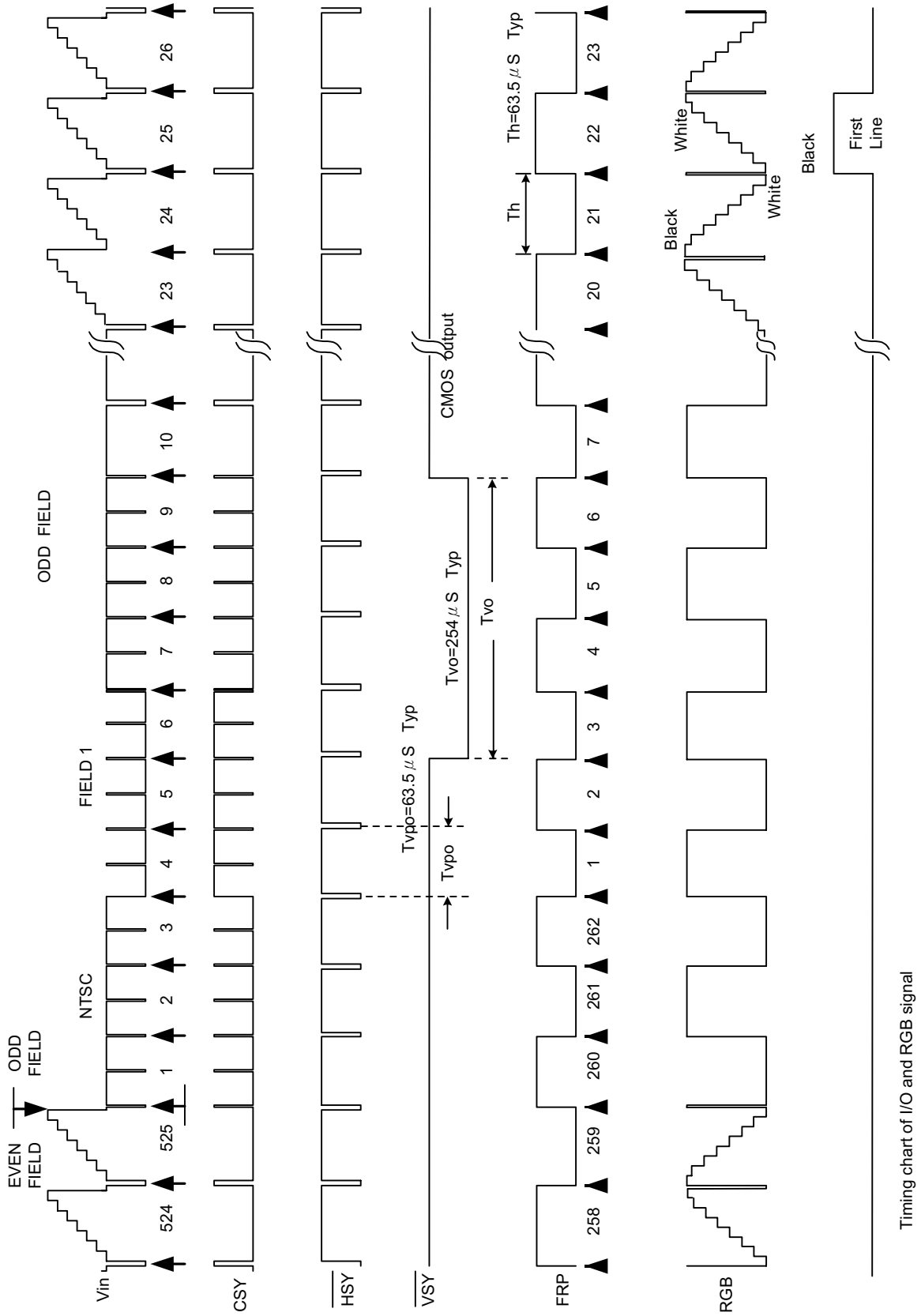

Timing chart of I/O and RGB signal

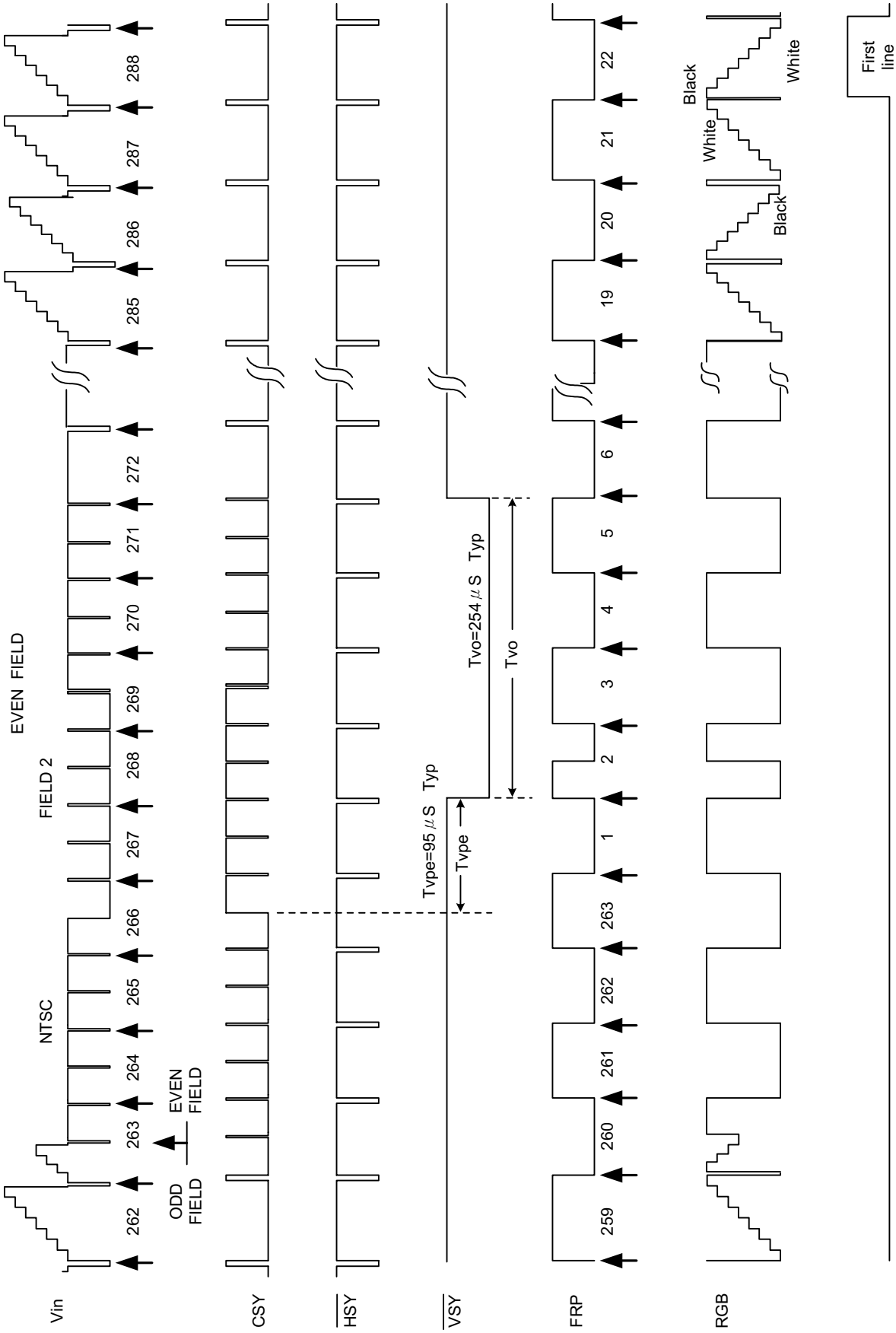

Timing chart of I/O and RGB signal

D) PAL System

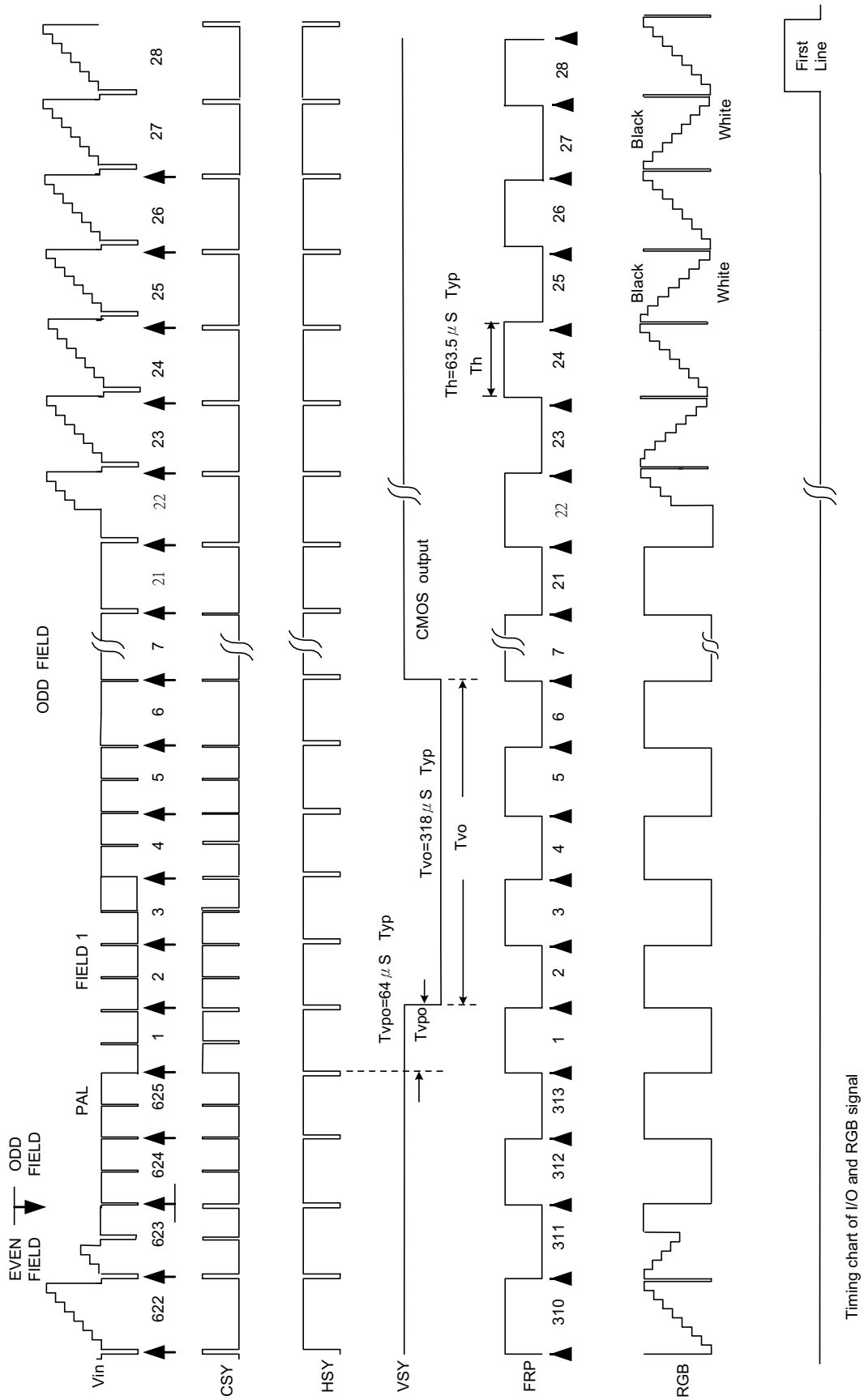

Timing chart of I/O and RGB signal

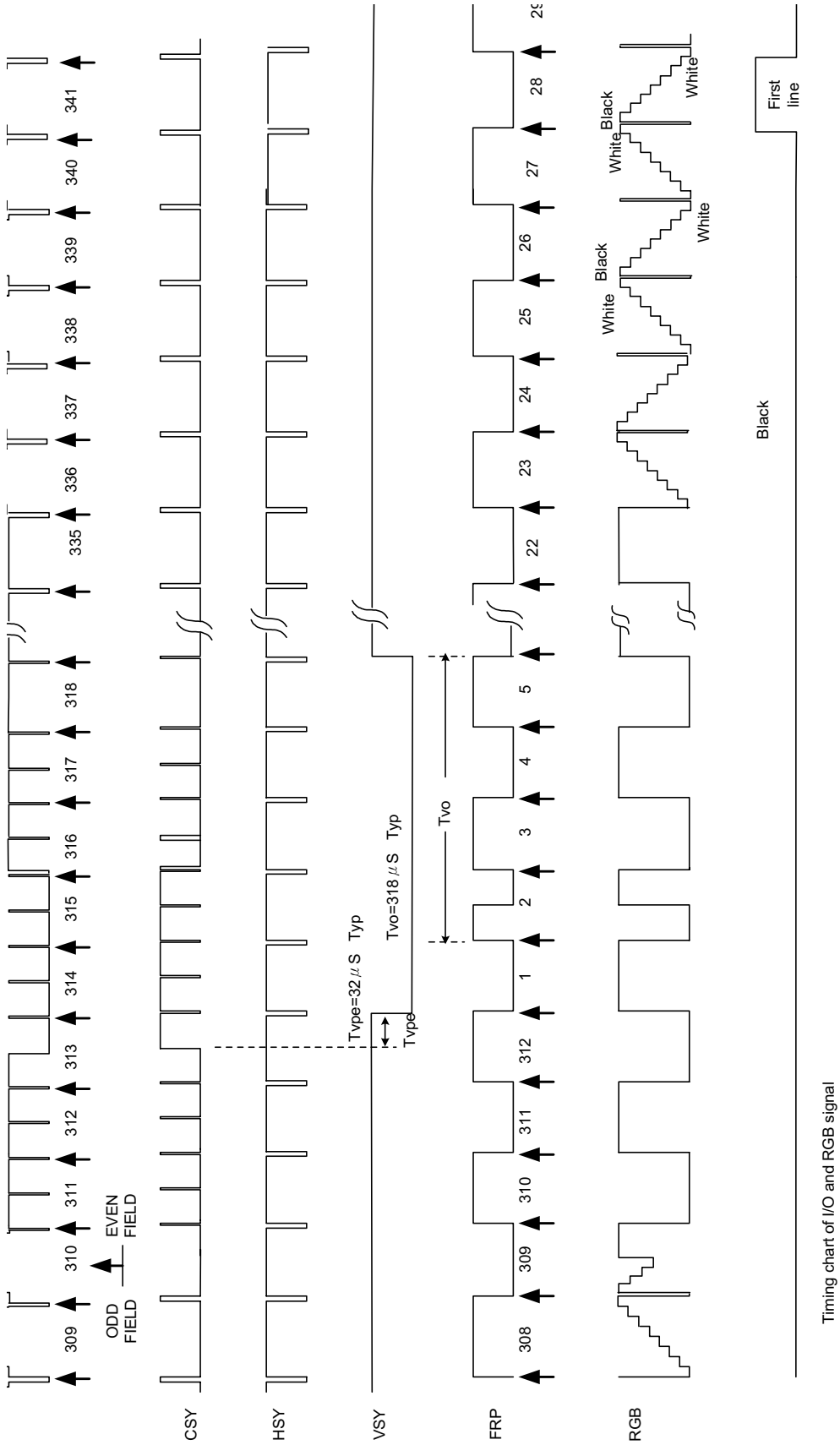

Timing chart of I/O and RGB signal

E) Display Timing

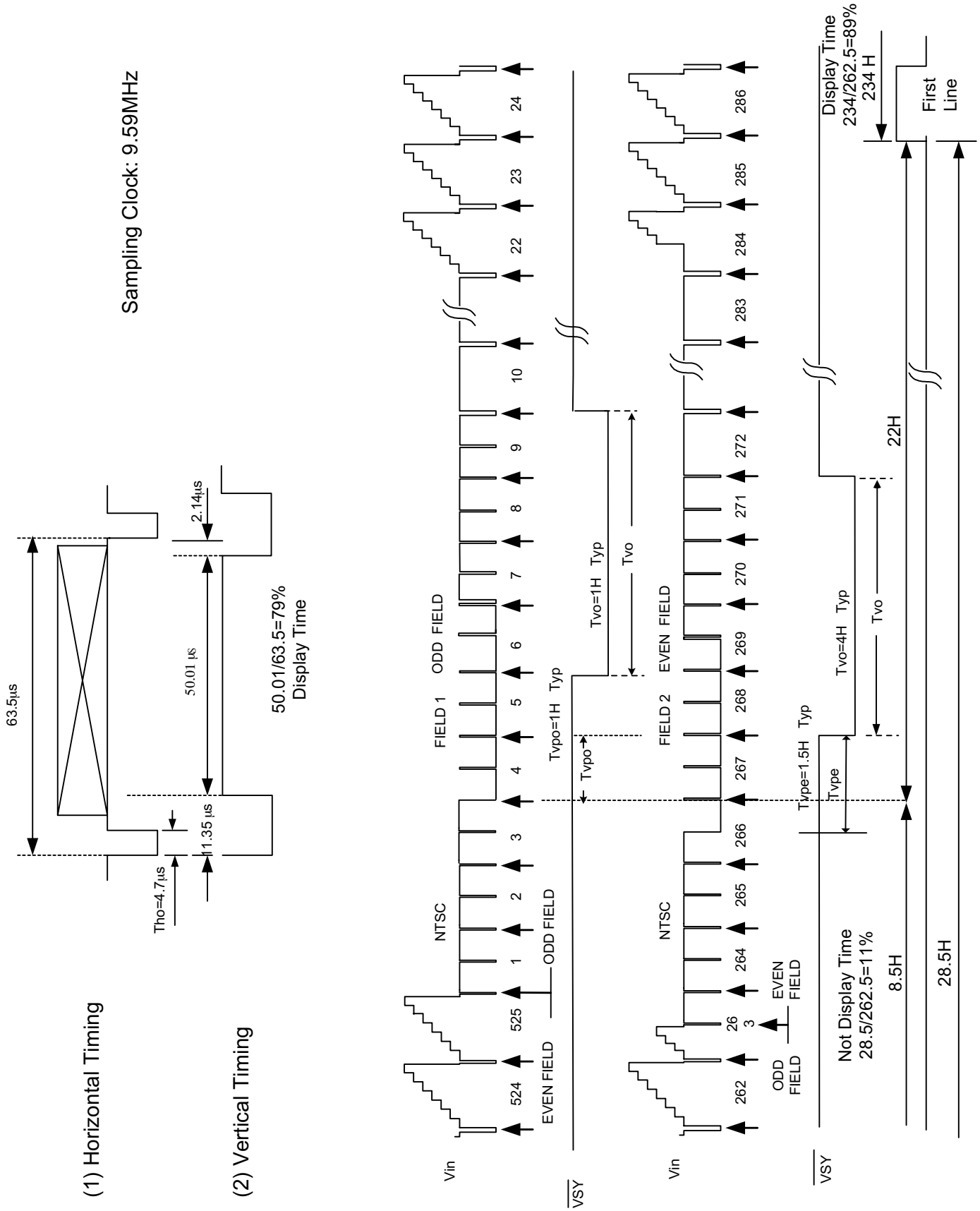

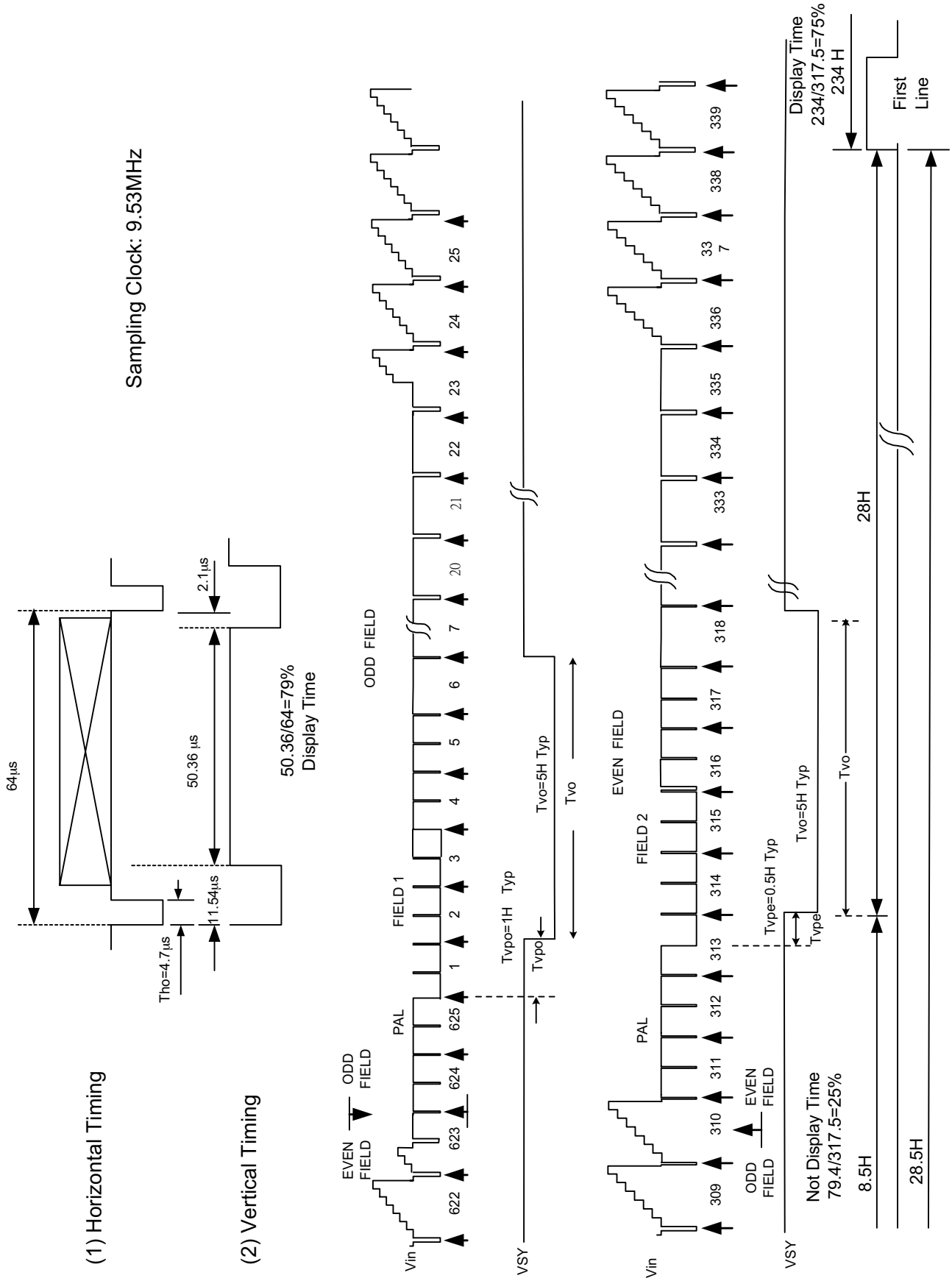

8.Optical Characteristics

8-1) Specification:

Ta = 25℃

Parameter		Symbol	Condition	MIN.	TYP.	MAX.	Unit	Remarks
Viewing Angle	Horizontal	θ21, θ22	CR≧10	45	55		deg	Note 8-1
	Vertical	θ12		10	15		deg	Note 8-1
		θ11		30	35		deg	Note 8-1
Contrast Ratio		CR		80	150			Note 8-2
Response time	Rise	Tr	θ=0°			30	ms	Note 8-4
	Fall	Tf				50	ms	
Brightness				250	350		cd/㎡	Note 8-3
White Chromaticity		x	θ=0°	0.265	0.315	0.365		Note 8-3
		y	θ=0°	0.280	0.330	0.380		
Lamp Life Time +25℃				20000	25000		hr	

Note 8-1: The definitions of viewing angles

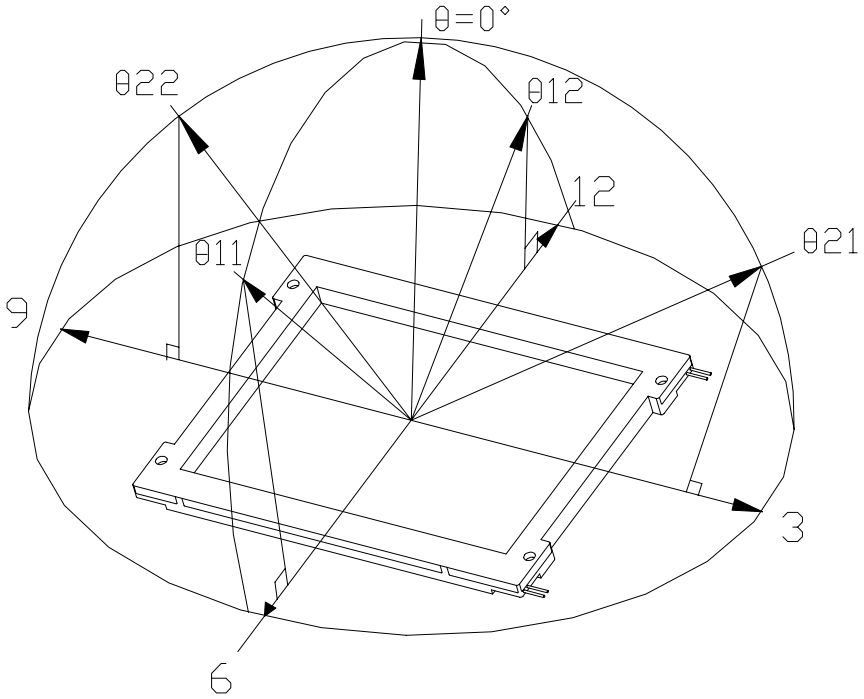

Note 8-2：CR $= \dfrac{\text{Luminance when Testing point is White}}{\text{Luminance when Testing point is Black}}$

(Testing configuration see 8-2)

Contrast Ratio is measured in optimum common electrode voltage.

Note 8-3：Topcon BM-7(fast) luminance meter 2° field of view is used in the testing (after 20~30 minutes operation).

Lamp Current 6mA

Note 8-4: The definition of response time:

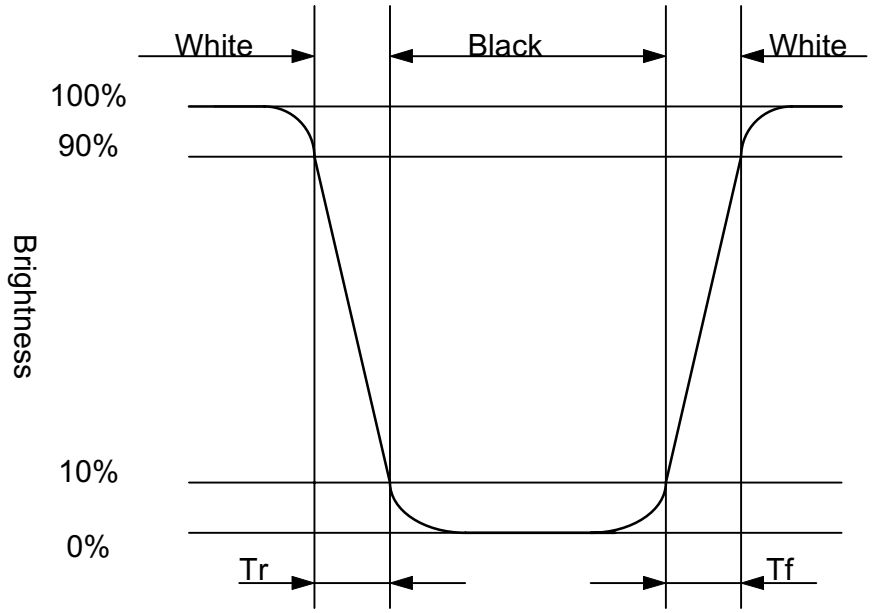

8-2) Testing configuration

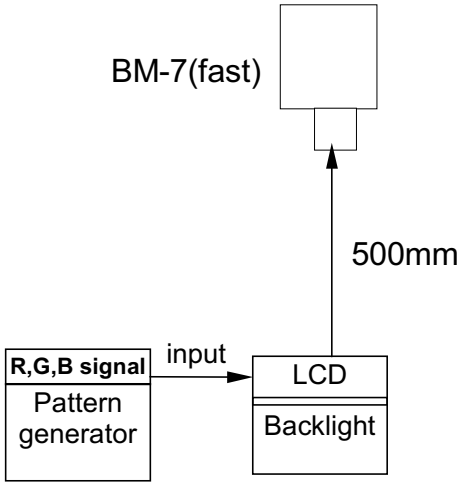

Caution: 1. Environmental illumination ≦ 1 lux
2. Before test CR, Vcom voltage must be adjusted carefully to get the best CR.

- LCD Display

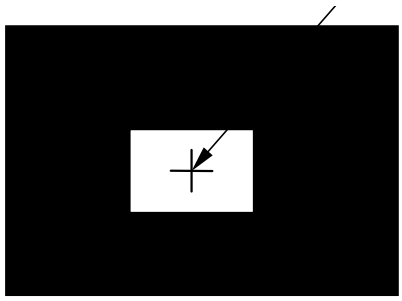

Pattern A

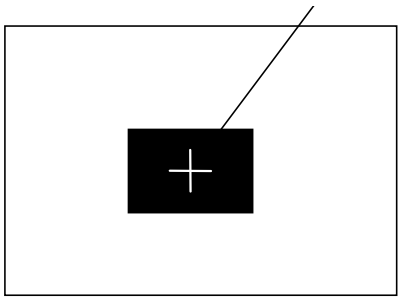

Pattern B

- R, G, B Waveform of Pattern A at Testing Point

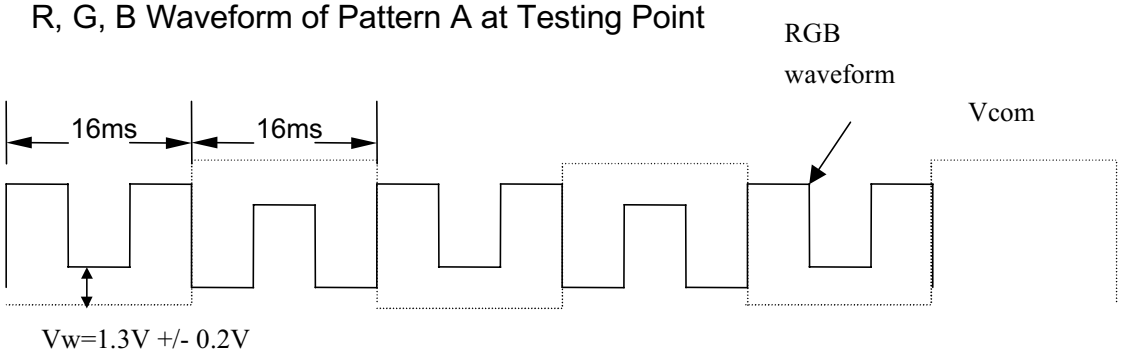

- R, G, B Waveform of Pattern B at Testing Point

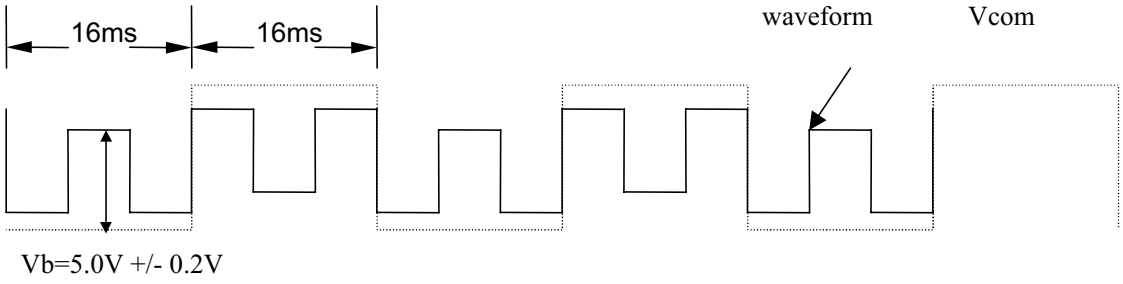

9. Reliability Test

No	Test Item	Test Condition
1	High Temperature Storage Test	Ta = +80 ℃, 240 hrs
2	Low Temperature Storage Test	Ta = -30℃, 240 hrs
3	High Temperature Operation Test	Ta = +70 ℃, 240 hrs
4	Low Temperature Operation Test	Ta = -20 ℃, 240 hrs
5	High Temperature & High Humidity Operation Test	Ta = +60℃, 95%RH, 240 hrs
6	Thermal Cycling Test (non-operating)	-25℃ →+25℃→ +70℃, 200 Cycles 30 min 5min 30 min
7	Vibration Test (non-operating)	Frequency：10 ~ 55 H_Z Amplitude：1.5 mm Sweep time: 11 mins Test Period: 6 Cycles for each direction of X, Y, Z
8	Shock Test (non-operating)	100G, 6ms Direction: ± X, ± Y, ± Z Cycle: 3 times
9	Electrostatic Discharge Test (non-operating)	150pF, 330Ω Air: ±15KV; Contact: ±8KV 10 times/point, 9 points/panel face

Ta: ambient temperature

[Criteria]
Under the display quality test conditions with normal operation state, there should be no change which may affect practical display function.

10. Block Diagram

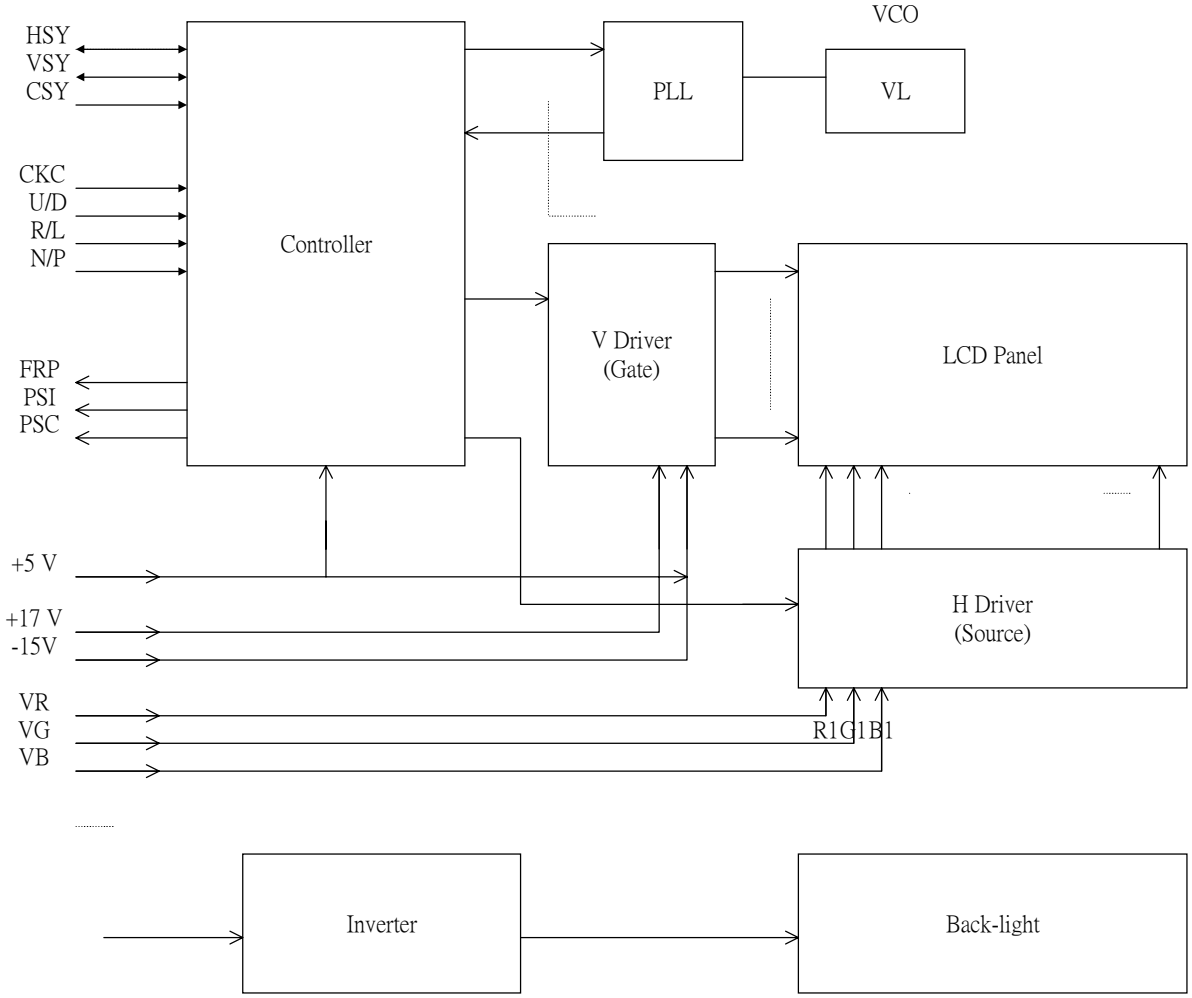

0. Packing

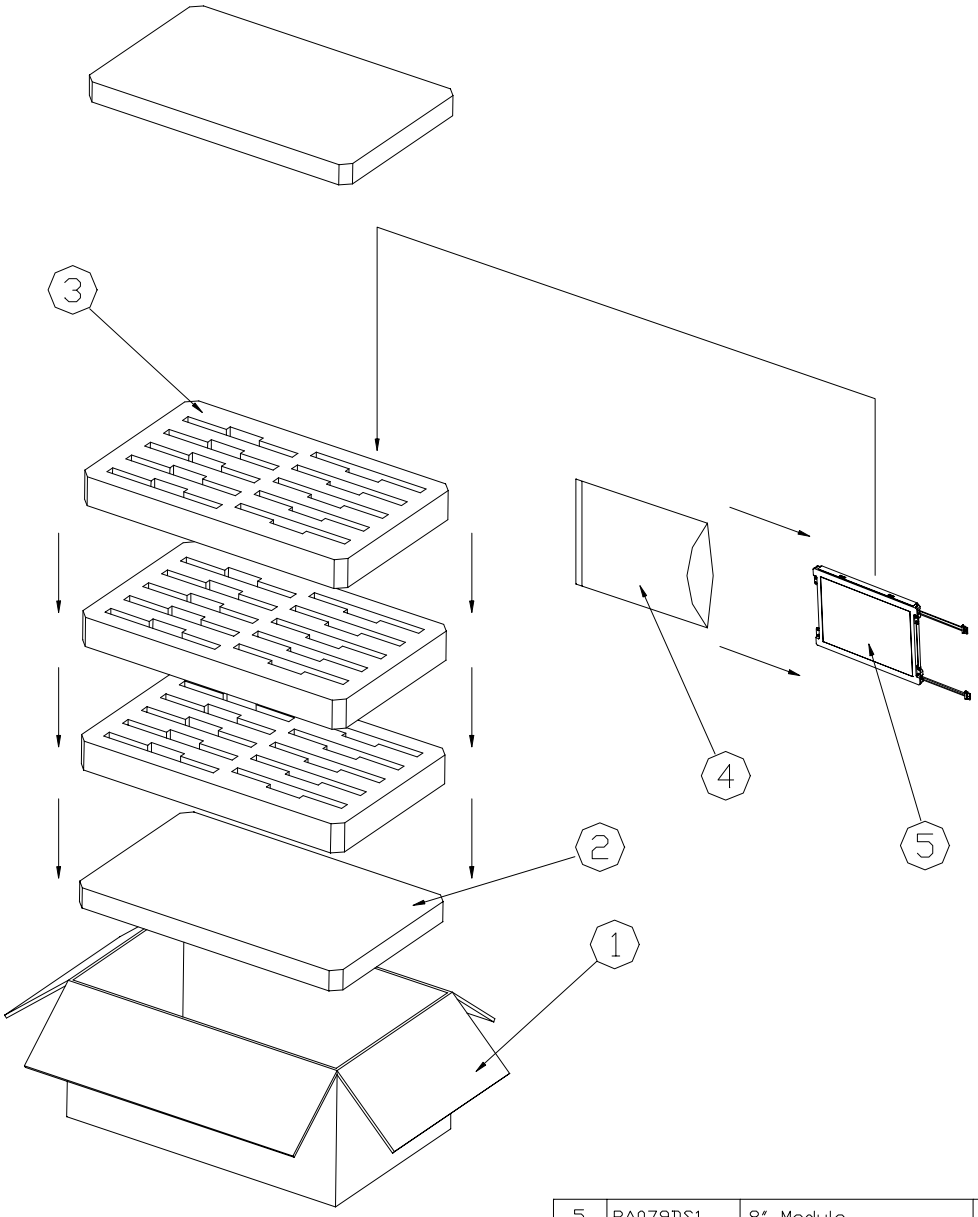

ITEM	PART NO.	DESCRIPTION	QTY	REMARK
5	PA079DS1	8" Module	10	
4	50-0500061	防靜電袋 PINK 180*340	10	
3	50-0300351	EPE緩衝材480*295*50	3	
2	50-0300341	EPE緩衝材480*295*35	2	
1	50-0300361	CARTON 480*295*230	1	

MTL.SPEC.	UNSPECIFIED TOL'S ANGLE ROUGHNESS	REMARK	元太科技工業股份有限公司 Prime View International Co.,ltd.			
APPROVE		. .	SCALE	UNIT	SHEET 1 OF 1	DWG.TITLE 7.9" PACKING
CHECK		. .				
DESIGN	MJ.Chuang	00'07.13	MTL.NO.	DWG.NO.	REV.	A4 SIZE

Revision History

Rev.	Issued Date	Revised Contents
0.1	Sep. 22,2000	NEW
0.2	Mar.13,2001	Modify Note 5-6,Note 5-7 define Add 8-1 White Chromaticity