Version : 0.1

Preliminary

TECHNICAL SPECIFICATION

MODEL NO. : PD064VL1

☐Customer's Confirmation

Customer _____

By _____

☐PVI's Confirmation

TECHNICAL SPECIFICATION

CONTENTS

NO.	ITEM	PAGE
-	Cover	1
-	Contents	1
1	Application	3
2	Features	3
3	Mechanical Specifications	3
4	Mechanical Drawing of TFT-LCD module	4
5	Input Terminals	5
6	Electrical Characteristics	7
7	Pixel Arrangement	14
8	Display Color and Gray Scale Reference	15
9	Block Diagram	16
10	Power On Sequence	17
11	Optical Characteristics	18
12	Handling Cautions	21
13	Reliability Test	22
14	Packing Diagram	23
	Revision History	-

1. Application

This product applies computer peripheral , industrial meter , image communication and multi-media.

2. Features

. Support the DENB mode, Sync mode (Hsync+Vsync)

. Pixel in stripe configuration

. Slim and compact

. Display Colors : 262,144 colors

. Image Reversion : Up/Down and Left/Right

. Viewing Direction : 6 o'clock

. Backlight lamps are Replaceable

3. Mechanical Specifications

Parameter	Specifications	Unit
Screen Size	6.4 (diagonal)	inch
Display Format	640×(R,G,B)×480	dot
Active Area	129.6 (H)×97.44 (V)	mm
Pixel Pitch	0.2025 (H)×0.203 (V)	mm
Pixel Configuration	Stripe	
Surface Treatment	Anti – Glare &Wide View film	
Outline Dimension	175.4 (W)×126.9 (H)×12.5 (D) (Typ.)	mm
Weight	TBD	g

4.Mechanical Drawing of TFT-LCD Module

Outline Drawing : Front View (unit mm)

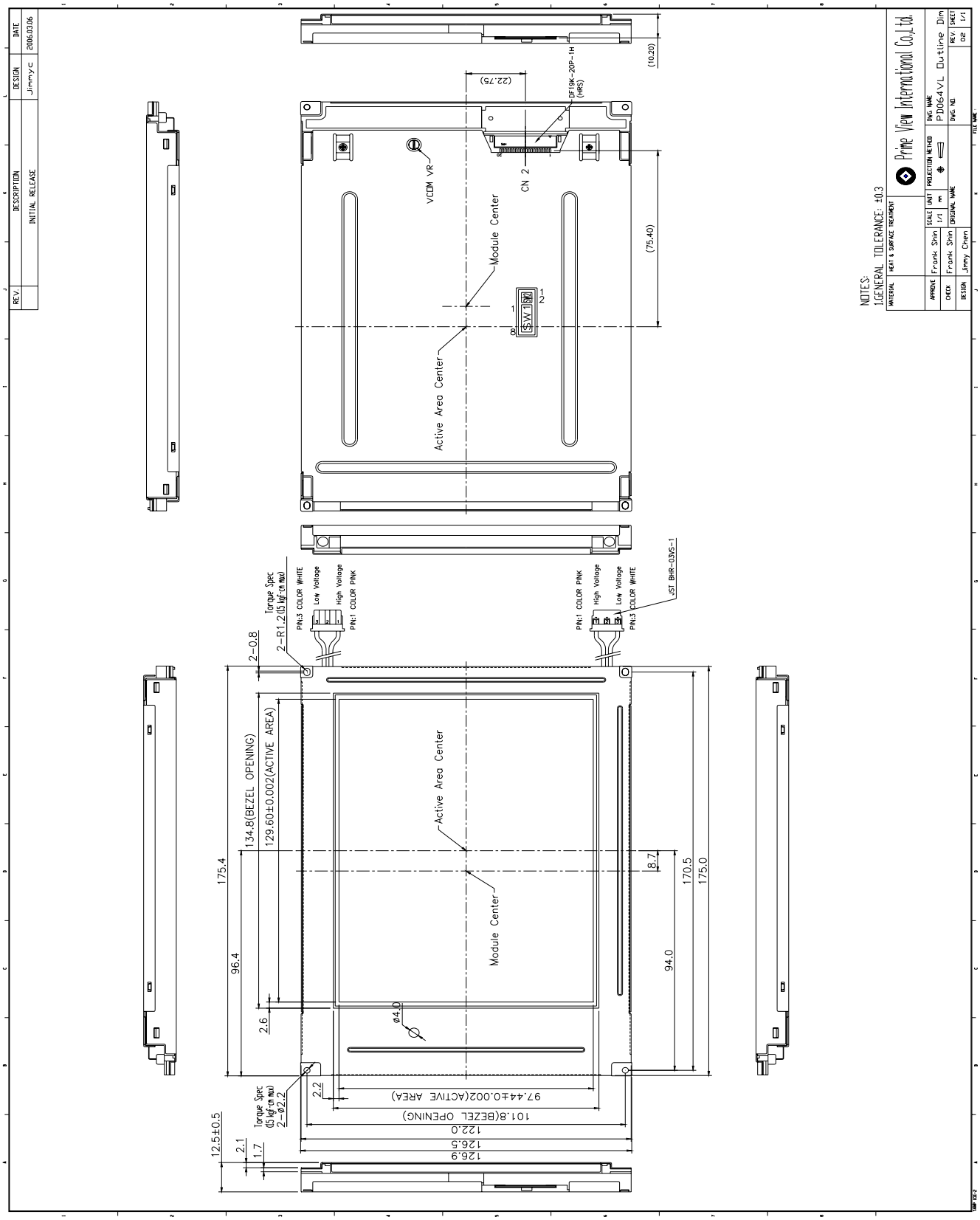

5.Input Terminals

5-1) TFT-LCD Panel Driving
Connector type: DFL19K-20P-1H(HRS)

Pin No.	Symbol	Function	Remark
1	Vcc	+3.3V Power Supply	
2	Vcc	+3.3V Power Supply	
3	GND	Ground	
4	GND	Ground	
5	INO-	LVDS receiver signal channel 0	
6	INO+	LVDS receiver signal channel 0	
7	GND	Ground	
8	IN1-	LVDS receiver signal channel 1	
9	IN1+	LVDS receiver signal channel 1	
10	GND	Ground	
11	IN2-	LVDS receiver signal channel 2	
12	IN2+	LVDS receiver signal channel 2	
13	GND	Ground	
14	CLK-	LVDS receiver signal clock	
15	CLK+	LVDS receiver signal clock	
16	GND	Ground	
17	NC	No connection	
18	NC	No connection	
19	GND	Ground	
20	GND	Ground	

LVDS Interface Block Diagram

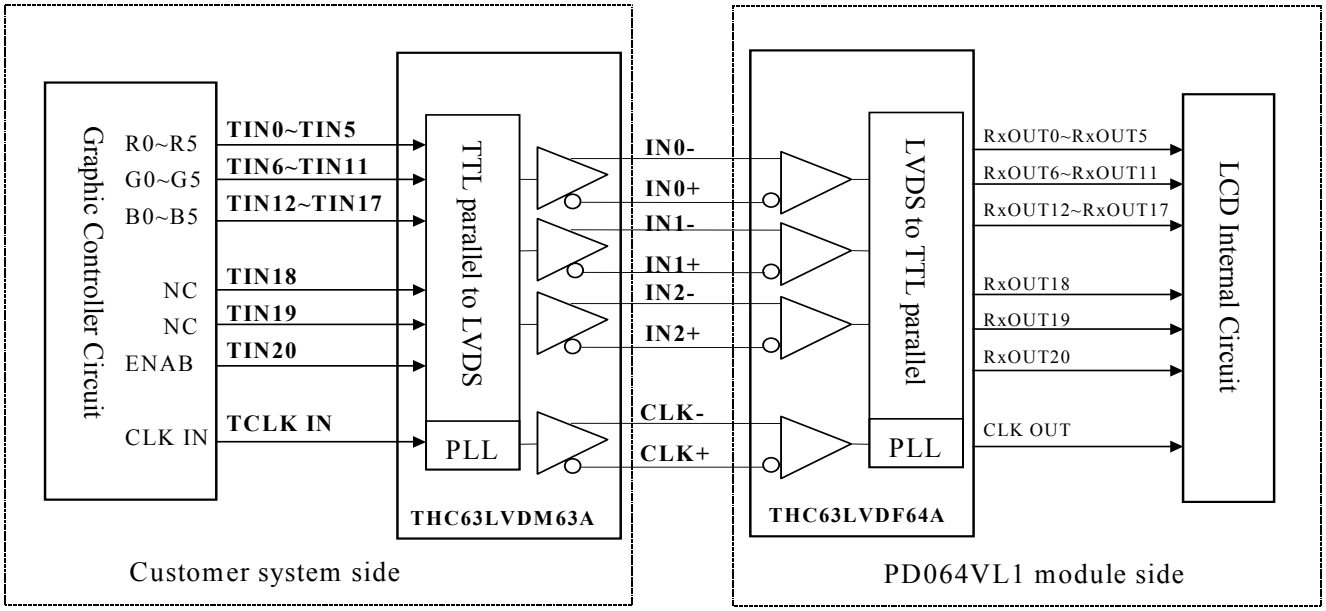

Recommended Transmitter (THC63LVDM63A Thine) to PD064VL1 interface Assignment:

Input terminal of THC63LVDM63A		Graphic controller output signal		Output signal symbol	To PM070WL1 interface terminal (Symbol)
Symbol	No.	Symbol	Function		
TIN0	44	R0	Red pixel data (LSB)	Tout0- / Tout0+	No.5 : IN0- / No.6 : IN0+
TIN1	45	R1	Red pixel data		
TIN2	47	R2	Red pixel data		
TIN3	48	R3	Red pixel data		
TIN4	1	R4	Red pixel data		
TIN5	3	R5	Red pixel data(MSB)		
TIN6	4	G0	Green pixel data (LSB)		
TIN7	6	G1	Green pixel data	Tout1- / Tout1+	No.8 : IN1- / No.9 : IN1+
TIN8	7	G2	Green pixel data		
TIN9	9	G3	Green pixel data		
TIN10	10	G4	Green pixel data		
TIN11	12	G5	Green pixel data(MSB)		
TIN12	13	B0	Blue pixel data(LSB)		
TIN13	15	B1	Blue pixel data		
TIN14	16	B2	Blue pixel data	Tout2- / Tout2+	No.11 : IN2- / N0.12 : IN2+
TIN15	18	B3	Blue pixel data		
TIN16	19	B4	Blue pixel data		
TIN17	20	B5	Blue pixel data(MSB)		
TIN18	22	Hsync	Horizontal Synchronous Signal		
TIN19	23	Vsync	Vertical Synchronous Signal		
TIN20	25	DENB	Compound Synchronization signal		
CLK in	26	CLK	Data sampling clock	TCLK out- TCLK out+	No.14 : CLK No.15 : CLK

DENB input signal.

If customer wanted to off the DENB mode , you must keep the DENB always High or Low.

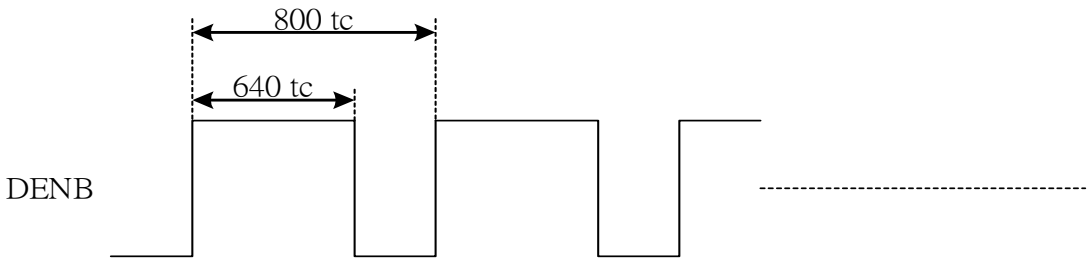

(tc: the period of sampling clock)

6.Electrical Characteristics

6-1) Recommended Operating Conditions: GND = 0V，Ta = 25℃

Item	Symbol	Min.	Typ.	Max.	Unit	Remark
Supply Voltage	Vcc	3.0	3.3	3.6	V	
Current Dissipation	Icc	-	TBD	TBD	mA	Note 6-1
LVDS Differential input high threshold	V_{TH}	-	-	100	mV	Note 6-2
LVDS Differential input low threshold	V_{TL}	-100	-	-		

Note 6-1 : To test the current dissipation of VCC using the “color bars” testing pattern shown as below

1	2	3	4	5	6	7	8

1. White
2. Yellow
3. Cyan
4. Green
5. Magenta
6. Red
7. Blue
8. Black

Idd current dissipation testing pattern

Note6-2 : Please refers to THC63LVDF64A specification by THINE Corporation. This LCD module conforms to LVDS standard.

6-2) Recommended Driving Condition for Back Light

Ta=25℃

Item	Symbol	Min.	Typ.	Max.	Unit	Remark
Lamp Current	I_L	3	6	7	mA	Note 6-3
Lamp Voltage	V_L	330	360	390	Vrms	I_L=6mA
Lamp frequency	P_L	-	40	-	KHz	Note 6-4
Starting voltage(25℃) (Reference Value)	V_S	-	475	523	Vrms	Note 6-5
Starting voltage(0℃) (Reference Value)	V_S	-	620	682	Vrms	Note 6-5

Note 6-3 : In order to satisfy the quality of B/L , no matter use what kind of inverter , the output lamp current must between Min. and Max. to avoid the abnormal display image caused by B/L.

Note 6-4: The waveform of lamp driving voltage should be as closed to a perfect SIN wave as possible.

Note 6-5 : The" Max of starting voltage " means the minimum voltage of inverter to turn on the CCFL. and it should be applied to the lamp for more than 1 second to start up. Otherwise the lamp may not be turned on.

Backlight driving connector : JST BHR-03VS-1 , 3 Pins , Pitch : 4 mm

Pin No	Symbol	Description	Remark
1	VL1	Input terminal (Hi voltage side)	
2	NC	No Connection	
3	VL2	Input terminal (Low voltage side)	Note 6-6

Note 6-6 : Low voltage side of backlight inverter connects with ground of inverter circuits.

6-3) Power Consumption

Parameters	Symbol	Typ.	Max.	Unit	Remark
Current Dissipation	I_{CC}	TBD	TBD	mA	I_{CC} =+3.3V
LCD Panel Power Consumption(W/O B/L)	-	TBD	TBD	W	
Backlight Power Consumption	-	TBD		W	Note 6-7

Note 6-7: Backlight lamp power consumption is calculated by $I_L \times V_L$.

6-4) Input / Output signal timing chart

Parameters		Symbol	Min.	Typ.	Max.	Unit	Note
CLK	Frequency	Fc=1/tc	-	25	-	MHz	Note 6-8
		tc	-	40	-	ns	
Hsync	Period	Hp	-	32	-	us	
			-	800	-	tc	
	Display period	Hd	-	640	-	tc	
	Pulse width	Hpw	12	96	139	tc	
	Back-porch	Hbp	12	48	139	tc	
	Front-porch	Hfp	-	16	-	tc	
	Hpw+Hbp		136	144	151	tc	
	Hsync-CLK	Hhc	10	-	Tc-10	ns	
	Vsync-Hsync	Hvh	0	0	200	tc	
Vsync	Period	Vp	-	16.8	-	ms	
			515	525	800	Hp	
	Display period	Vdp	-	480	-	Hp	
	Pulse width	Vpw	2	2	35	Hp	
	Back-porch	Vbp	2	33	35	Hp	
	Front-porch	Vfp	1	10	-	Hp	
	Vpw+Vbp		31	35	38	Hp	
Data	CLK-DATA	Dcd	10	-	-	ns	
	DATA-CLK	Ddc	10	-	-	ns	
DENB	Horizontal scanning period	T1	780	800	900	tc	
	Horizontal display period	T2	-	640	-	tc	
	Vertical display period	T3	-	480	-	T1	
	Frame cycling period	T4	515	525	800	T1	

Note 6-8: tc is the period of sampling clock. In case of low-frequency , the image-flicker may occur.

6-5) Display Time Range

(1) Vertical Timing :

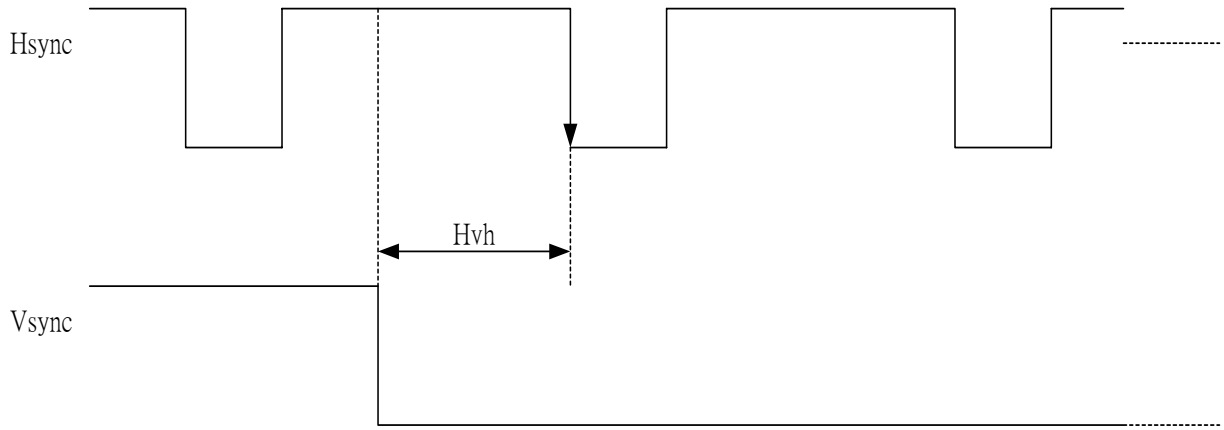

(2)Horizontal Timing :

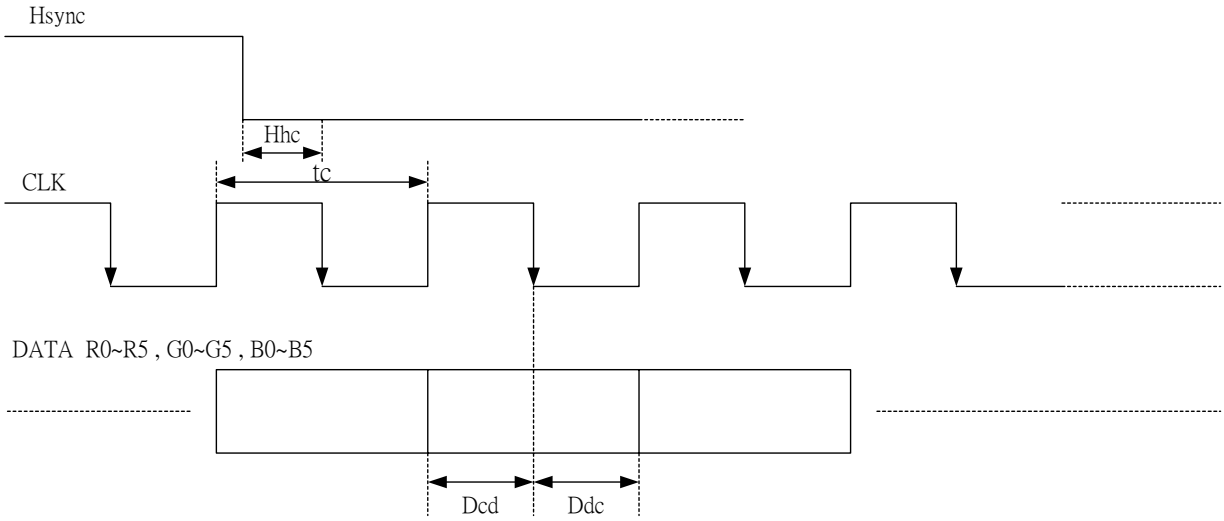

(3) DENB Timing :

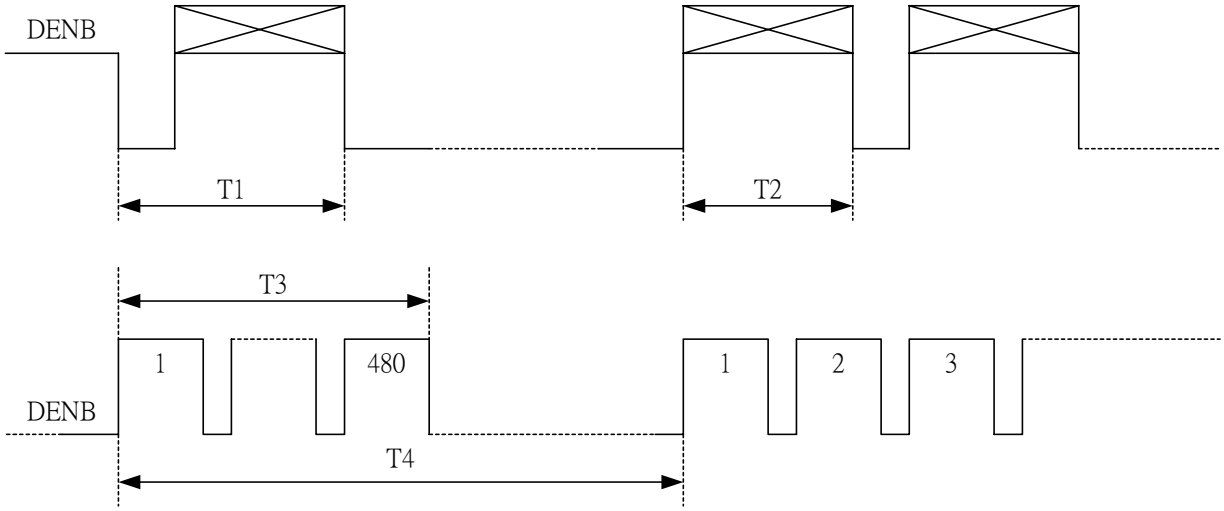

(4) Detail of Horizontal Timing :

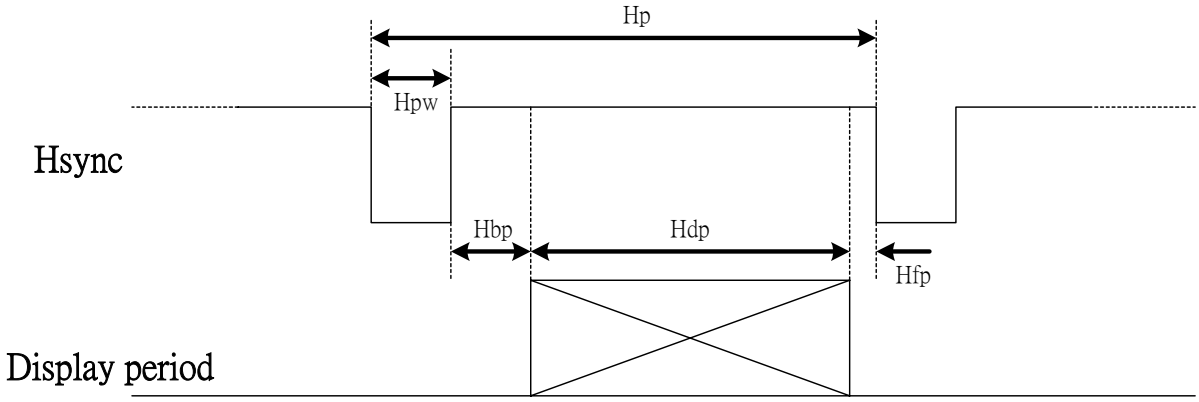

(5) Detail of Vertical Timing :

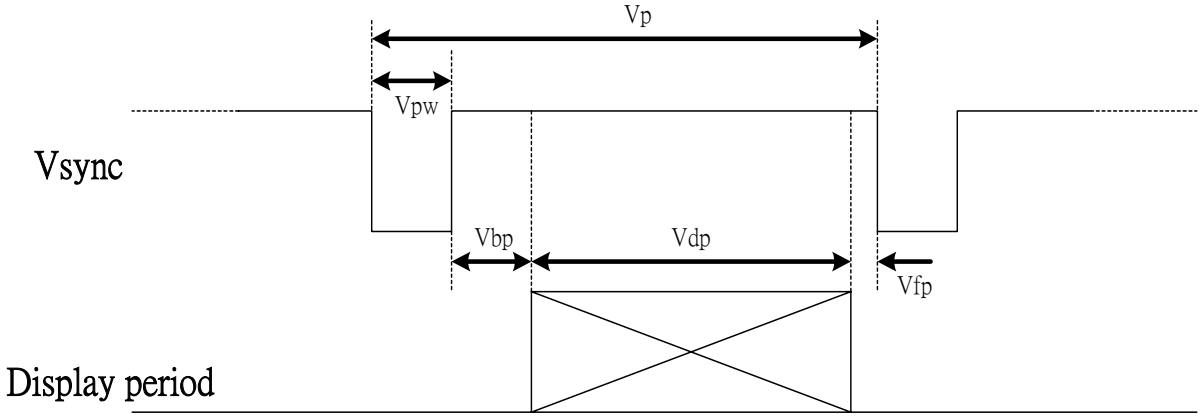

.

6-8) Control Board Dip Switch Format

SW1(8 Pins)

Item	Symbol	Condition	Remark
SW 1-1	-	No connection	Default (OFF)
SW 1-2	HP3	Horizontal Shift (8 Line)	Default (OFF)
SW 1-3	HP2	Horizontal Shift (4 Line)	Default (ON)
SW 1-4	HP1	Horizontal Shift (2 Line)	Default (ON)
SW 1-5	HP0	Horizontal Shift (1 Line)	Default (ON)
SW 1-6	VP2	Vertical Shift (4 Line)	Default (OFF)
SW 1-7	VP1	Vertical Shift (2 Line)	Default (ON)
SW 1-8	VP0	Vertical Shift (1Line)	Default (ON)

1. The default state is base on Sync mode
2. Total horizontal shift line are 15 lines (HP0~HP3 on)
   Total vertical shift line are 7 lines (VP0~VP2 on)

SW2 (2 Pins)

Item	Symbol	Condition	Remark
SW 2-1	UD	Vertical Image Shift-direction Select	TBD
SW 2-2	RL	Horizontal Image Shift-direction Select	TBD

The definitions of U/D & R/L

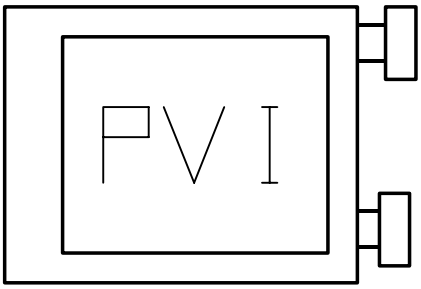

R/L= TBD, U/D= TBD

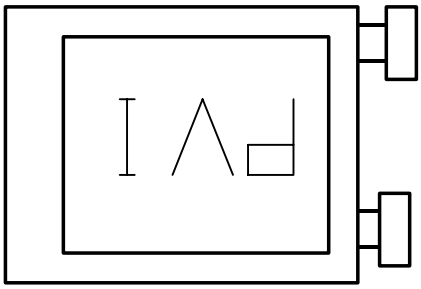

R/L= TBD, U/D= TBD

7. Pixel Arrangement

The LCD module pixel arrangement is the stripe.

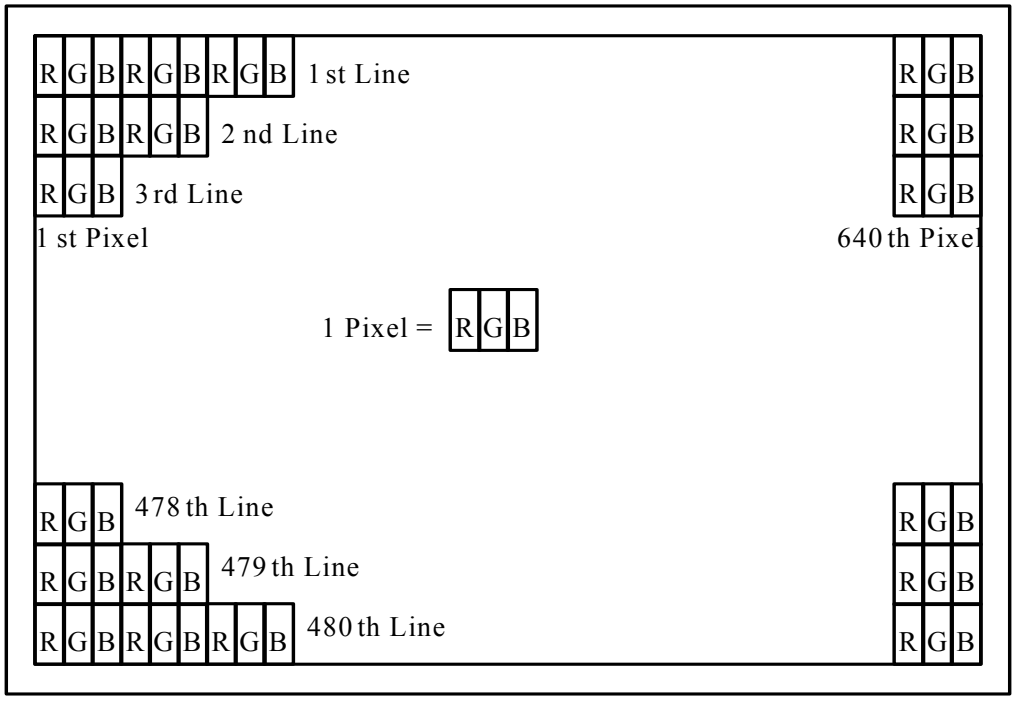

8. Display Color and Gray Scale Reference

Color		Input Color Data																	
		Red						Green						Blue					
		R5	R4	R3	R2	R1	R0	G5	G4	G3	G2	G1	G0	B5	B4	B3	B2	B1	B0
Basic Colors	Black	0	0	0	0	0	0	0	0	0	0	0	0	0	0	0	0	0	0
	Red (63)	1	1	1	1	1	1	0	0	0	0	0	0	0	0	0	0	0	0
	Green (63)	0	0	0	0	0	0	1	1	1	1	1	1	0	0	0	0	0	0
	Blue (63)	0	0	0	0	0	0	0	0	0	0	0	0	1	1	1	1	1	1
	Cyan	0	0	0	0	0	0	1	1	1	1	1	1	1	1	1	1	1	1
	Magenta	1	1	1	1	1	1	0	0	0	0	0	0	1	1	1	1	1	1
	Yellow	1	1	1	1	1	1	1	1	1	1	1	1	0	0	0	0	0	0
	White	1	1	1	1	1	1	1	1	1	1	1	1	1	1	1	1	1	1
Red	Red (00)	0	0	0	0	0	0	0	0	0	0	0	0	0	0	0	0	0	0
	Red (01)	0	0	0	0	0	1	0	0	0	0	0	0	0	0	0	0	0	0
	Red (02)	0	0	0	0	1	0	0	0	0	0	0	0	0	0	0	0	0	0
	Darker																		
	↓	↓	↓	↓	↓	↓	↓	↓	↓	↓	↓	↓	↓	↓	↓	↓	↓	↓	↓
	Brighter																		
	Red (61)	1	1	1	1	0	1	0	0	0	0	0	0	0	0	0	0	0	0
	Red (62)	1	1	1	1	1	0	0	0	0	0	0	0	0	0	0	0	0	0
	Red (63)	1	1	1	1	1	1	0	0	0	0	0	0	0	0	0	0	0	0
Green	Green (00)	0	0	0	0	0	0	0	0	0	0	0	0	0	0	0	0	0	0
	Green (01)	0	0	0	0	0	0	0	0	0	0	0	1	0	0	0	0	0	0
	Green (02)	0	0	0	0	0	0	0	0	0	0	1	0	0	0	0	0	0	0
	Darker																		
	↓	↓	↓	↓	↓	↓	↓	↓	↓	↓	↓	↓	↓	↓	↓	↓	↓	↓	↓
	Brighter																		
	Green (61)	0	0	0	0	0	0	1	1	1	1	0	1	0	0	0	0	0	0
	Green (62)	0	0	0	0	0	0	1	1	1	1	1	0	0	0	0	0	0	0
	Green (63)	0	0	0	0	0	0	1	1	1	1	1	1	0	0	0	0	0	0
Blue	Blue (00)	0	0	0	0	0	0	0	0	0	0	0	0	0	0	0	0	0	0
	Blue (01)	0	0	0	0	0	0	0	0	0	0	0	0	0	0	0	0	0	1
	Blue (02)	0	0	0	0	0	0	0	0	0	0	0	0	0	0	0	0	1	0
	Darker																		
	↓	↓	↓	↓	↓	↓	↓	↓	↓	↓	↓	↓	↓	↓	↓	↓	↓	↓	↓
	Brighter																		
	Blue (61)	0	0	0	0	0	0	0	0	0	0	0	0	1	1	1	1	0	1
	Blue (62)	0	0	0	0	0	0	0	0	0	0	0	0	1	1	1	1	1	0
	Blue (63)	0	0	0	0	0	0	0	0	0	0	0	0	1	1	1	1	1	1

9. Block Diagram

10-1) TFT-module Block Diagram

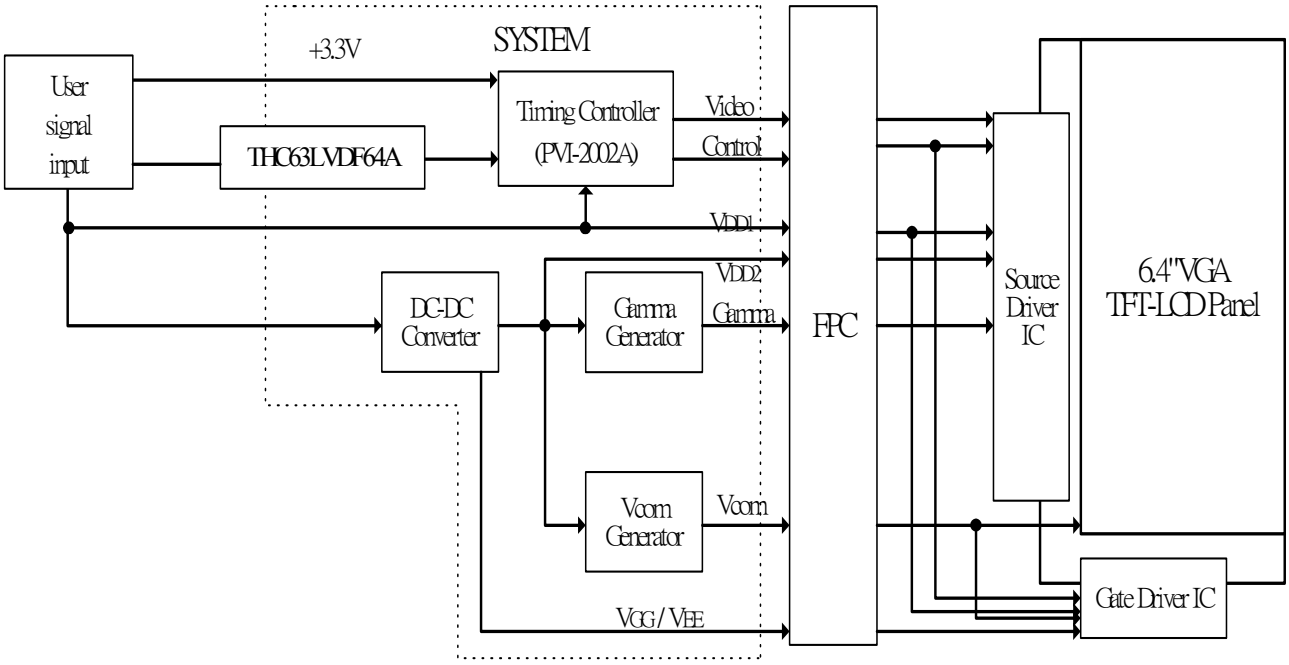

10. Power On Sequence

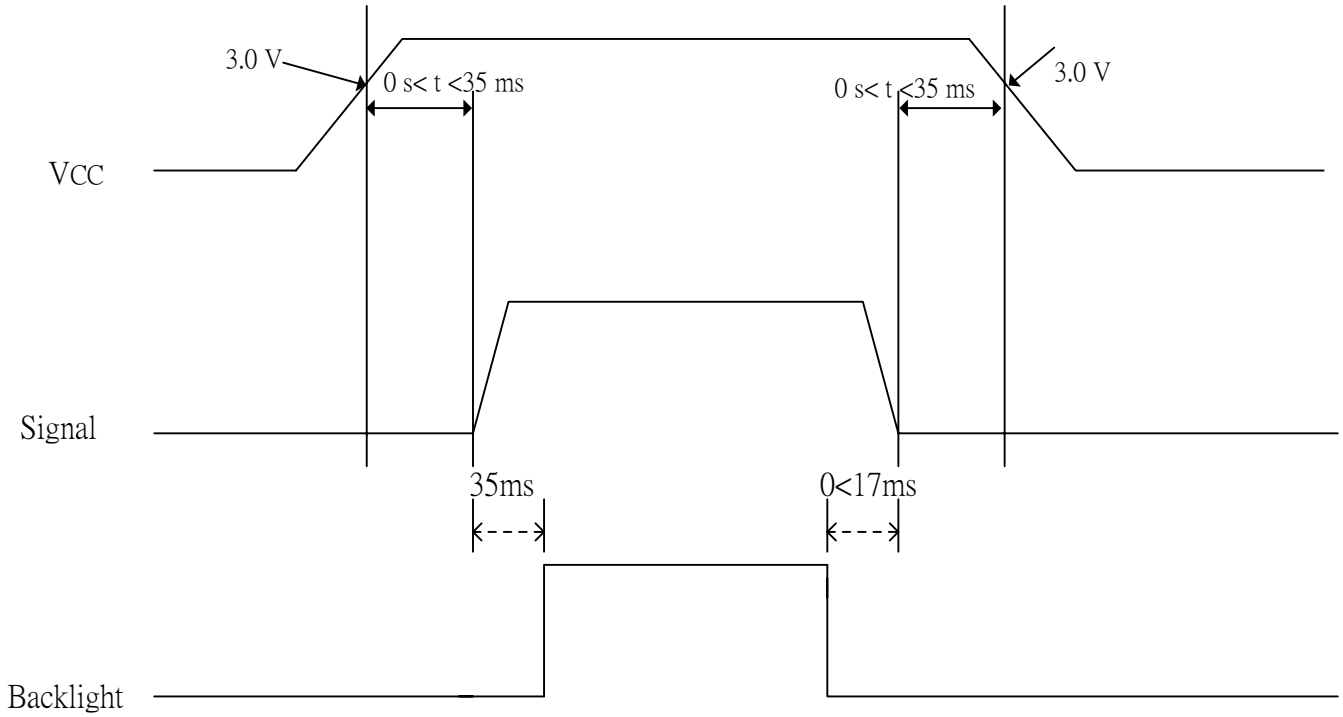

1. The supply voltage for input signals should be same as $V_{CC.}$

2. When the power is off , please keep whole signals (DENB ,Hsync, Vsync, CLK, Data) low level or high impedance

11. Optical Characteristics

11-1) Specification:

Ta=25℃

Parameter		Symbol	Condition	MIN.	TYP.	MAX.	Unit	Remarks
Viewing Angle	Horizontal	θ21, θ22	CR＞10	55	60	-	deg	Note 11-1
	Vertical	θ12		35	40	-	deg	
		θ11		50	55	-	deg	
Contrast Ratio		CR	At optimized Viewing angle	200	400	-	-	Note 11-2
Response time	Rise	Tr	θ=0°	-	15	30	ms	Note 11-4
	Fall	Tf		-	25	50	ms	
Brightness		L	θ=0°	350	400	-	cd/㎡	Note 11-3
Transmission Ratio		T	θ=0°	6.7	7.2	-	%	
Uniformity		U		75	80	-	%	Note 11-5
Cross Talk		-	θ=0°	-	-	3	%	Note 11-6
White Chromaticity		x	θ=0°	0.264	0.294	0.324	-	Note 11-3
		y		0.276	0.308	0.338	-	
Lamp Life Time		-	+25℃	-	20,000	-	hr	

Note 11-1 : The definitions of viewing angle diagrams :

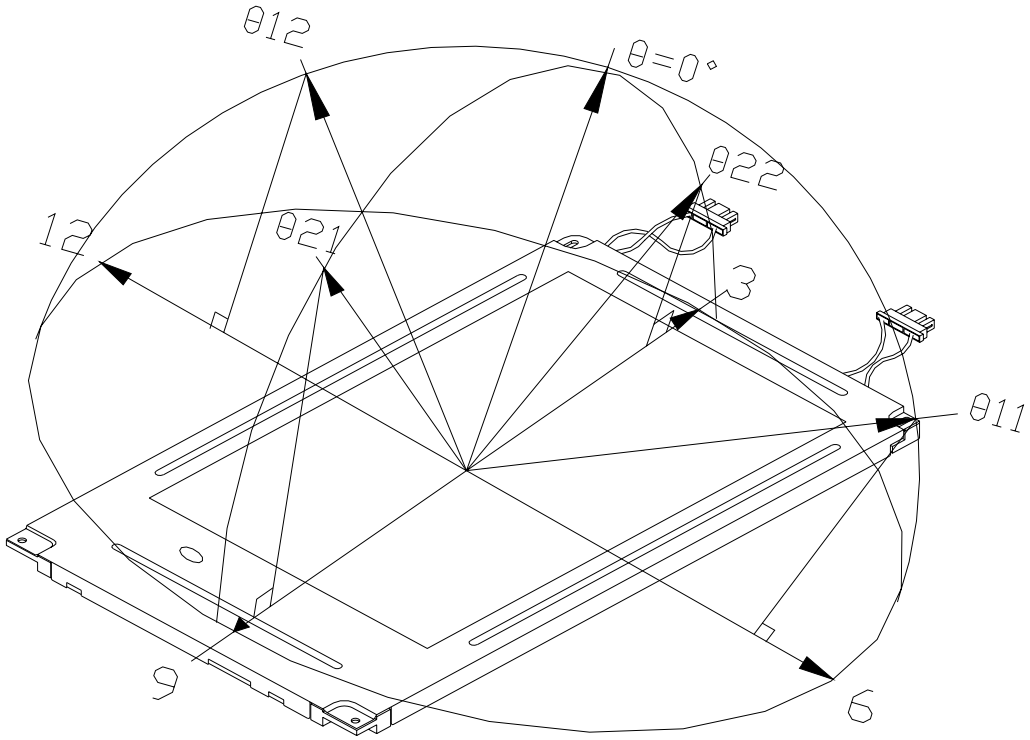

Note 11-2 : CR = $\frac{\text{Luminance when LCD is White}}{\text{Luminance when LCD is Black}}$

Contrast Ratio is measured in optimum common electrode voltage.

Note 11-3 : 1. Topcon BM-7 (fast) luminance meter 1°field of view is used in the testing (after 20~30 minutes operation).

2.Lamp current : 6 mA

3.Inverter model : TDK-347.

Note 11-4 : The definitions of response time

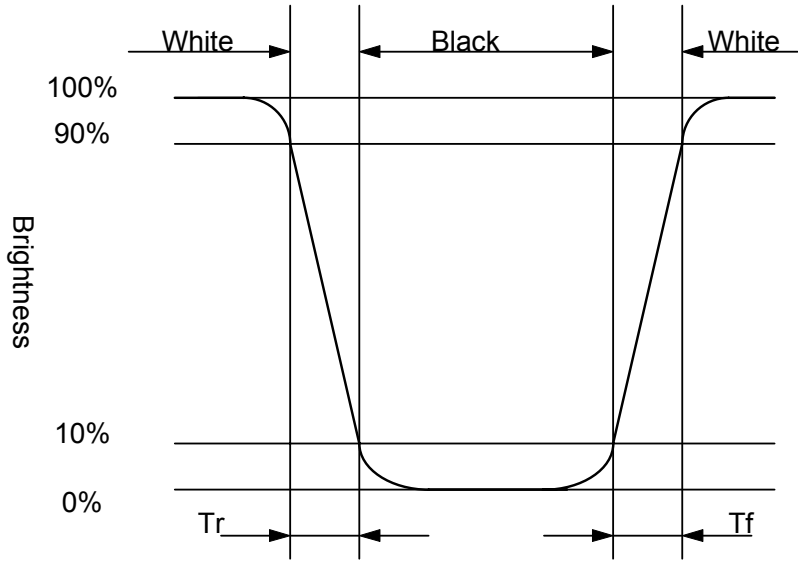

Note 11-5 : The uniformity of LCD is defined as

U = $\frac{\text{The Minimum Brightness of the 9 testing Points}}{\text{The Maximum Brightness of the 9 testing Points}}$

Luminance meter : BM-5A or BM-7 fast (TOPCON)

Measurement distance : 500 mm +/- 50 mm

Ambient illumination : < 1 Lux

Measuring direction : Perpendicular to the surface of module

The test pattern is white (Gray Level 63).

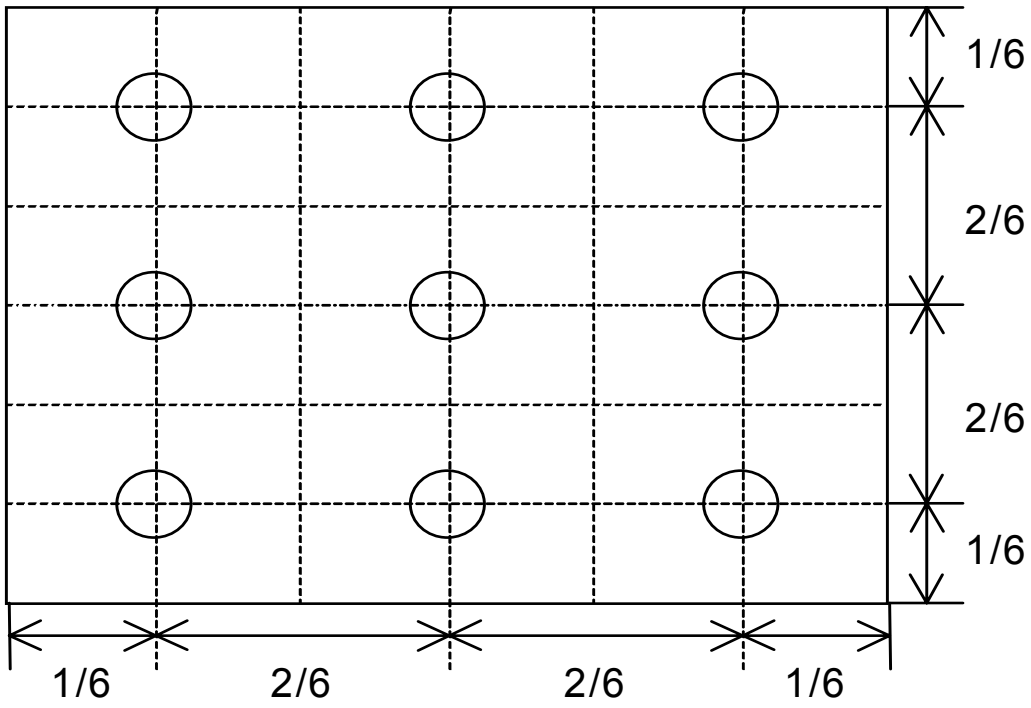

Note11-6 : Cross Talk (CTK) = $\frac{|YA-YB|}{YA} \times 100\%$

YA : Brightness of Pattern A

YB : Brightness of Pattern B

Pattern A

(Gray Level 46)

Pattern B

(Gray Level 46, central black box exclusive)

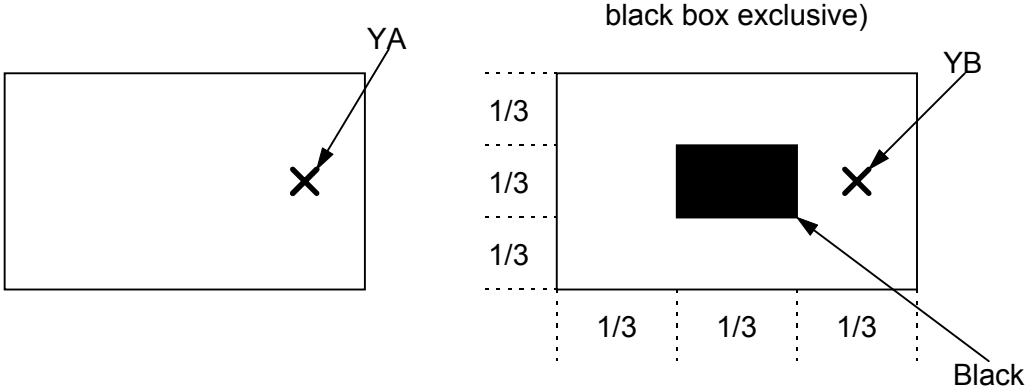

✕: Testing Point (A and B are at the same point.)

(Gray Level 0)

12. Handling Cautions

12-1) Mounting of module

a) Please power off the module when you connect the input/output connector.

b) Please connect the ground pattern of the inverter circuit surely. If the connection is not perfect, some following problems may happen possibly.

1.The noise from the backlight unit will increase.

2.The output from inverter circuit will be unstable.

3.In some cases a part of module will heat.

c) Polarizer which is made of soft material and susceptible to flaw must be handled carefully.

d) Protective film (Laminator) is applied on surface to protect it against scratches and dirts. It is recommended to peel off the laminator before use and taking care of static electricity.

12-2) Precautions in mounting

a) When metal part of the TFT-LCD module (shielding lid and rear case) is soiled, wipe it with soft dry cloth.

b) Wipe off water drops or finger grease immediately. Long contact with water may cause discoloration or spots.

c) TFT-LCD module uses glass which breaks or cracks easily if dropped or bumped on hard surface. Please handle with care.

d) Since CMOS LSI is used in the module. So take care of static electricity and earth yourself when handling.

12-3) Adjusting module

a) Adjusting volumes on the rear face of the module have been set optimally before shipment.

b) Therefore, do not change any adjusted values. If adjusted values are changed, the specifications described may not be satisfied.

12-4) Others

a) Do not expose the module to direct sunlight or intensive ultraviolet rays for many hours.

b) Store the module at a room temperature place.

c) The voltage of beginning electric discharge may over the normal voltage because of leakage current from approach conductor by to draw lump read lead line around.

d) If LCD panel breaks, it is possibly that the liquid crystal escapes from the panel. Avoid putting it into eyes or mouth. When liquid crystal sticks on hands, clothes or feet. Wash it out immediately with soap.

e) Observe all other precautionary requirements in handling general electronic components.

f) Please adjust the voltage of common electrode as material of attachment by 1 module.

13. Reliability Test

No	Test Item	Test Condition
1	High Temperature Storage Test	Ta = +80 ℃, 240 hrs
2	Low Temperature Storage Test	Ta = -30 ℃, 240 hrs
3	High Temperature Operation Test	Ta = +70 ℃, 240 hrs
4	Low Temperature Operation Test	Ta = -20 ℃, 240 hrs
5	High Temperature & High Humidity Operation Test	Ta = +60 ℃, 90%RH, 240 hrs
6	Thermal Cycling Test (non-operating)	-25℃ → +70℃, 200 Cycles 30 min 30 min
7	Shock Test (non-operating)	Gravity :490m/s Direction: ±X, ±Y, ±Z Pulse Width :11ms,half sine wave
8	Vibration Test (non-operating)	Frequency：10 ~ 57 H_Z/Vibration Width :0.075mm 58-500 H/ / Gravity :9.8m/s Sweep time: 11 minutes Test period: 3 hrs for each direction of X, Y, Z
9	Electrostatic Discharge Test (non-operating)	150pF, 330Ω Air : ±15KV ; Contact : ±8KV 10 times/point , 9 points/panel face

Ta: ambient temperature

[Criteria]

1. Main LCD should normally work under the normally condition no defect of function, screen quality and appearance (including : mura ,line defect ,no image)

2. After the temperature and humidity test, the luminance and CR (Contrast ratio) ,should not be lower than minimum of specification

3. After the vibration and shock test , can't be found chip broken

14. Packing Diagram

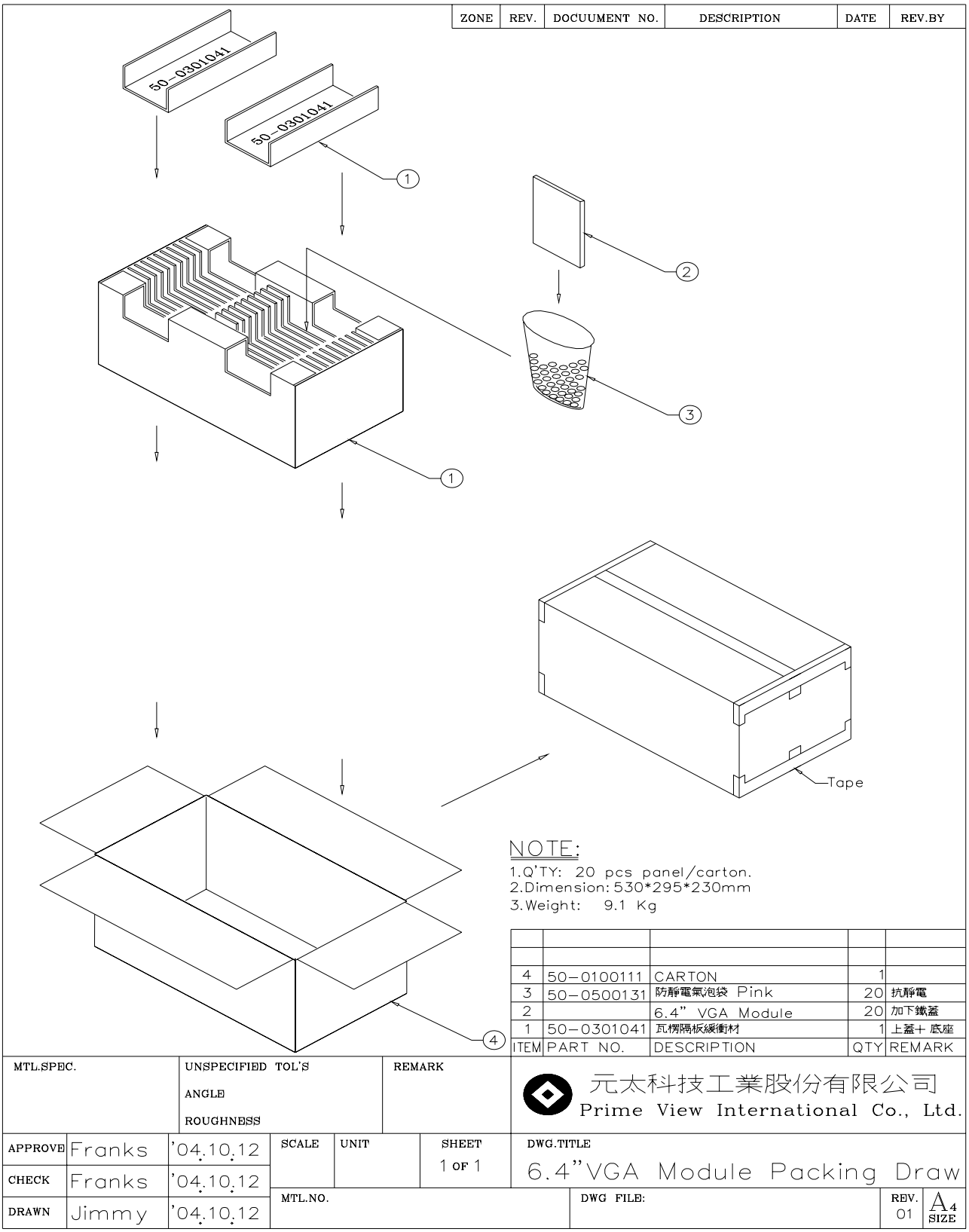

Revision History

Rev.	Issued Date	Revised Contents
0.1	Mar.06 ,2006	Preliminary