Product Information

SAMSUNG ELECTRONICS

TO :

DATE : **August 29. 2003**

*SAMSUNG TFT-LCD*

# MODEL NO. : LTA170V1-L01

***Any Modification of Spec is not allowed without SEC's permission.***

**Senior Engineer :** J. H. Park

**PREPARED BY : AMLCD Technical Customer Service Team**

**SAMSUNG ELECTRONICS CO., LTD.**

wise view™

## CONTENTS

# GENERAL DESCRIPTION

DESCRIPTION

LTA170V1-L01 is a color active matrix TFT (Thin Film Transistor) liquid crystal display that uses amorphous silicon TFT switching devices. This model is composed of a TFT LCD panel, a driver circuit and a back-light system. The resolution of 17.0- inch contains 640 x 480 pixels and can display up to 16.2 millions colors.

FEATURES

- High contrast ratio, High aperture structure
- Wide viewing angle
- High-speed response
- VGA(640x480 pixels) resolution
- Low power consumption
- 2 dual L-shape CCFLs (Cold Cathode Fluorescent Lights)
- DE Mode
- LVDS Interface with 1 pixel / clock

APPLICATIONS

- TV application
- Display terminals for AV application products
- Internet Surfing

GENERAL SPECIFICATIONS

| ITEM | SPECIFICATION | UNIT | NOTE |
|---|---|---|---|
| Active area | 344.640(H) x 258.480 (V) | mm | |
| Driver element | a-Si TFT active matrix | | |
| Display colors | 16.2M | | |
| Number of pixel | 640 x 480 | pixel | |
| Pixel arrangement | RGB vertical stripe | | |
| Pixel pitch | 0.1795(H) × 0.5385 (W) | mm | |
| Display Mode | Normally Black | | |
| Surface treatment | Haze 25 , Hard - Coating (3H) | | |

**Mechanical Information**

| ITEM | | MIN. | TYP. | MAX. | NOTE |
|---|---|---|---|---|---|
| Module size | Horizontal (H) | 377.7 | 378.2 | 378.7 | mm(W/O inverter) |
| | Vertical (V) | 294.7 | 295.2 | 295.7 | mm(W/O inverter) |
| | Depth (D) | - | - | 19.5 | mm(W/O inverter) |
| Weight | | - | 2030 | 2080 | g (W/O inverter) |

# 1. ABSOLUTE MAXIMUM RATINGS

## 1.1 ABSOLUTE RATINGS OF ENVIRONMENT

| ITEM | SYMBOL | MIN. | MAX. | UNIT | NOTE |
|---|---|---|---|---|---|
| Storage temperature | $T_{STG}$ | -20 | 60 | $^{O}C$ | (1),(5) |
| Operating temperature (Surface of Glass) | $T_{OPR}$ | 0 | 50 | $^{O}C$ | (1),(5) |
| Shock ( non-operating ) | Snop | - | 50 | G | (2),(4) |
| Vibration (non-operating) | Vnop | - | 1.0 | G | (3),(4) |

Note (1) Temperature and relative humidity range are shown in the figure below.
95 % RH Max. ( 40 ˚C ≥ Ta)
Maximum wet - bulb temperature at 39 ˚C or less. (Ta > 40 ˚C) No condensation.
(2) 11ms, sine wave, 1 time for ±X, ±Y, ±Z.
(3) 10 - 500 Hz, 2Hr for X,Y,Z.
(4) At testing Vibration and Shock, the fixture in holding the Module to be tested have to be hard and rigid enough so that the Module would not be twisted or bent by the fixture.
(5) If product is used for extended time excessively or exposed to high temperatures for extended time, there is a possibility of wide viewing angle film damage which could affect visual characteristics. And the operating temperature (Max. 50℃) of the LCD module is guaranteed. But side effects (ex : the phase transformation of the liquid crystal) when the LCD module is assembled into TV set are not guaranteed.

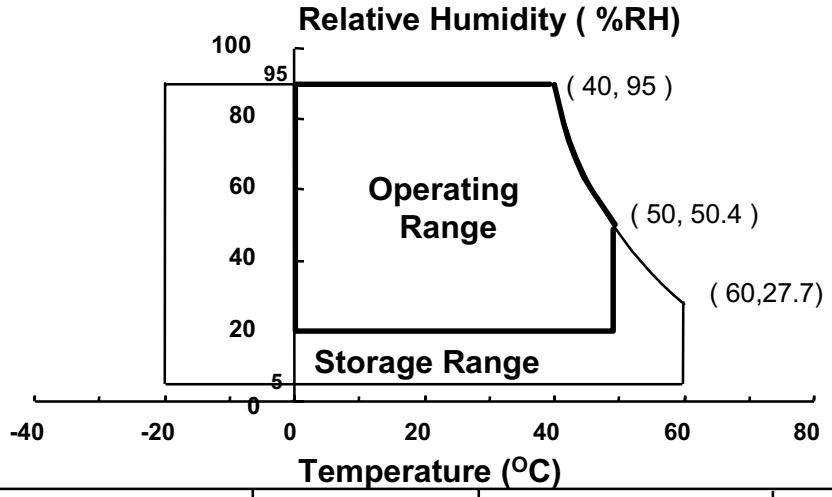

## 1.2 ELECTRICAL ABSOLUTE RATINGS

### (1) TFT LCD MODULE

(Vss = GND = 0 V)

| ITEM | SYMBOL | MIN. | MAX. | UNIT | NOTE |
|---|---|---|---|---|---|
| Power Supply Voltage | $V_{DD}$ | $V_{SS}$-0.5 | 6.0 | V | (1) |

* NOTE (1) With Ta ( 25 ± 2 $^{O}$C )

### (2) BACK-LIGHT UNIT

Ta = 25 ± 2 $^{O}$C

| ITEM | SYMBOL | MIN. | TYP. | MAX. | UNIT. | NOTE |
|---|---|---|---|---|---|---|
| Lamp current | $I_L$ | 3.0 | 5.5 | 7.0 | $mA_{rms}$ | (1) |
| Lamp frequency | $f_L$ | (40) | | (80) | KHz | (1) |

* NOTE (1) Permanent damage to the device may occur if maximum values are exceeded. Functional operation should be restricted to the conditions described under Normal Operating Conditions.

## 2. OPTICAL CHARACTERISTICS

The following items are measured under stable conditions. The optical characteristics should be measured in a dark room or equivalent state with the methods shown in Note (4).
- Measuring equipment : TOPCON BM-7 , BM-5A ; ELDIM EZ contrast ; PHOTO RESEARCH PR650

* Ta = 25 ± 2 ˚C , $V_{DD}$ = 5.0V, fv= 60Hz, $f_{DCLK}$=25.83MHz, $I_L$ = 5.5 mArms

| ITEM | | SYMBOL | CONDITION | MIN. | TYP. | MAX. | UNIT | NOTE |
|---|---|---|---|---|---|---|---|---|
| Contrast Ratio (Center of screen) | | CR | $\phi$ = 0, $\theta$ = 0 Normal Viewing Angle | - | 500 | - | | (1), (2), (4) |
| Response Time | Rising | $T_R$ | | - | 15 | 19 | msec | (1), (3) |
| | Falling | $T_F$ | | - | 10 | 13 | | |
| Luminance of White ( Center of screen) | | $Y_L$ | | - | 450 | - | cd/m$^2$ | (1), (4) |
| Color Chromaticity ( CIE 1933 ) | Red | $R_X$ | | Typ -0.03 | - | Typ +0.03 | | |
| | | $R_Y$ | | | - | | | |
| | Green | $G_X$ | | | - | | | |
| | | $G_Y$ | | | - | | | |
| | Blue | $B_X$ | | | - | | | |
| | | $B_Y$ | | | - | | | |
| | White | $W_X$ | | | 0.280 | | | |
| | | $W_Y$ | | | 0.290 | | | |
| Viewing Angle | Hor. | $\theta_L$ | CR ≥ 10 | 80 | 85 | - | Degrees | |
| | | $\theta_R$ | | 80 | 85 | - | | |
| | Ver. | $\phi_H$ | | 80 | 85 | - | | |
| | | $\phi_L$ | | 80 | 85 | - | | |
| Brightness Uniformity (9 Point) | | $B_{UNI}$ | | | - | 25 | % | (5) |

Note 1) Definition of Viewing Angle : Viewing angle range (10 ≤ CR )

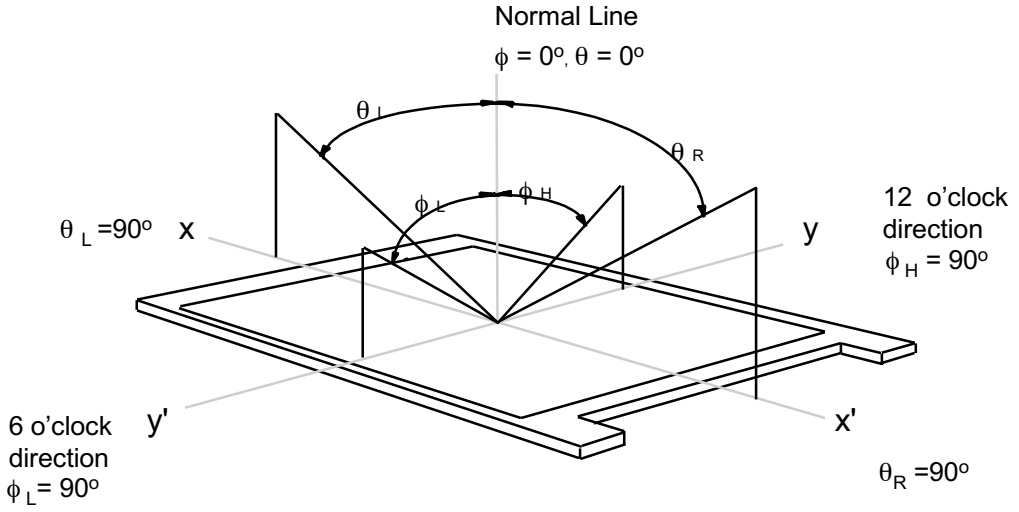


Note 2) Definition of Contrast Ratio (CR) : Ratio of gray max (Gmax) ,gray min (Gmin) at the center point of panel.

$$CR = \frac{\text{Luminance with all pixels white (Gmax)}}{\text{Luminance with all pixels black (Gmin)}}$$

Note 3) Definition of Response time : Sum of TR ,TF

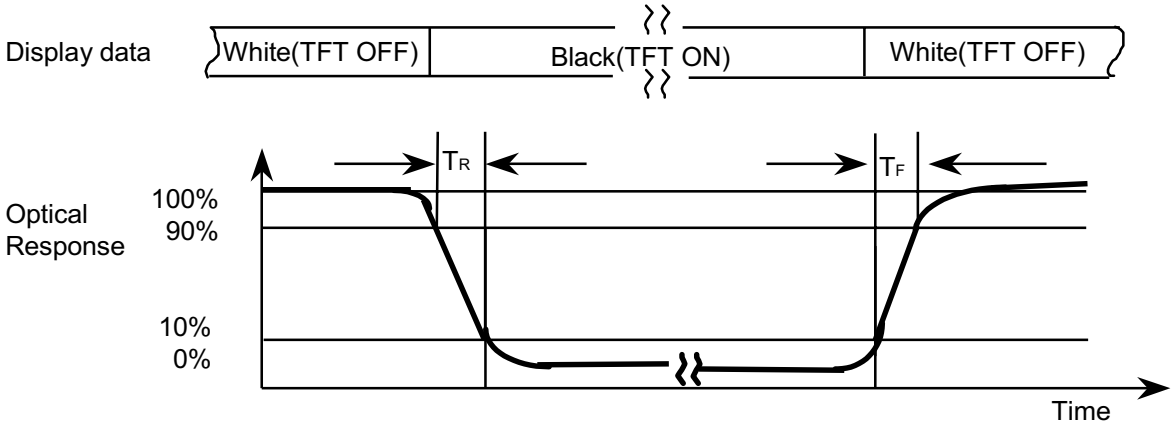

Note 4) After stabilizing and leaving the panel alone at a given temperature for 30 min , the measurement should be executed. Measurement should be executed in a stable, windless, and dark room. 30 min after lighting the back-light. This should be measured in the center of screen.
Lamp current : 5.5mA , Environment condition : Ta = 25 ± 2 ˚C

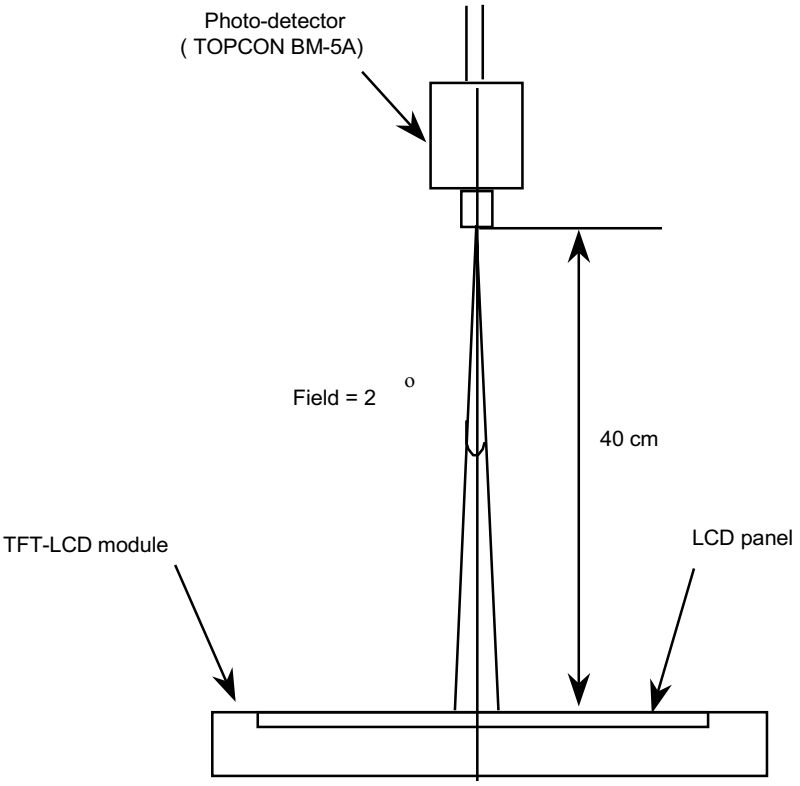


Optical characteristics measurement setup

Note 5) Definition of 9 points brightness uniformity

$$\text{Buni} = \left| 1 - \frac{B_{min}}{B_{max}} \right| \times 100$$

Bmax : Maximum Brightness

Bmin : Minimum Brightness

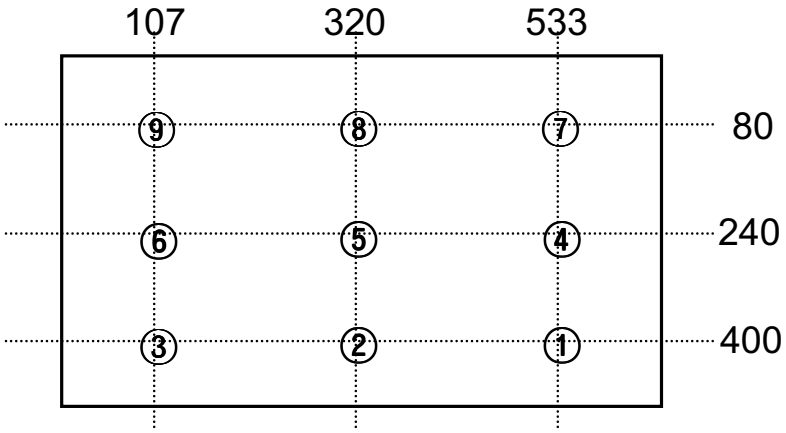


○ Test point

# 3. ELECTRICAL CHARACTERISTICS

## 3.1 TFT LCD MODULE

Ta= 25 ± 2 °C

| ITEM | SYMBOL | MIN. | TYP. | MAX. | UNIT | NOTE |
|---|---|---|---|---|---|---|
| Power Supply Voltage | $V_{DD}$ | 4.5 | 5.0 | 5.5 | V | (1) |
| Interface Type | LVDS | LVDS (DS90C385 / 386 Pair) | | | | |
| Power Consumption | (a) White | - | 350 | | mA | (2),(3) |
| | (b) Black | - | 320 | | mA | |
| | (c) sub-checker | - | 360 | | mA | |
| | (d) sub-vertical | - | 410 | 500 | mA | |
| Vsync Frequency | $f_V$ | - | 60 | - | Hz | 1pxl/clk |
| Hsync Frequency | $f_H$ | - | 31.469 | - | kHz | |
| Main Frequency | $f_{DCLK}$ | 20 | 25.83 | 40 | MHz | |
| Rush Current | $I_{RUSH}$ | - | - | 3.0 | A | (4) |

Note (1) Vss = 0 V, Input Power Max,Min=Ripple Max,Min

(2) $f_V$=60Hz, $f_{DCLK}$ =25.83MHZ, $V_{DD}$ = 5.0V, DC Current.

(3) 1 Pixel/clock

(4) Power dissipation check pattern

*a) White Pattern

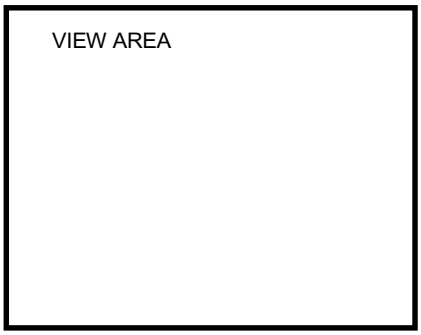


*b) Black Pattern

*c) Sub-Checker pattern

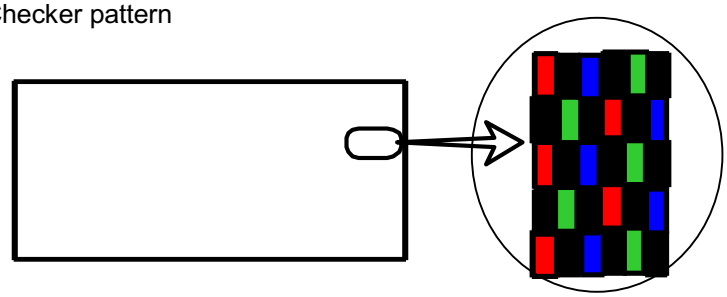

*d) Sub-Vertical pattern

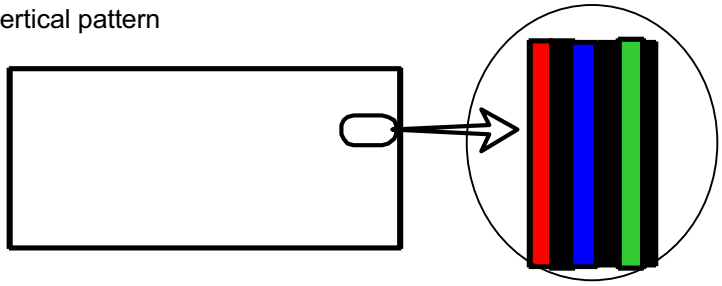

(5) Measurement Conditions (VDD rising time : 470us )

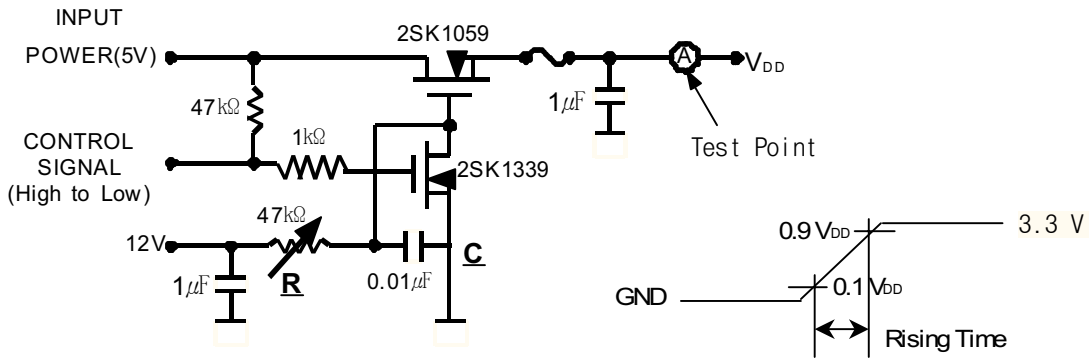


* Note : Control Signal : High ( + 5.0V ) → Low ( Ground )

All Signal lines to panel except for power 5.0V : Ground

The rising time of supplied voltage is controlled to 470us by R and C value.

## 3.2 BACK-LIGHT UNIT

The back-light system is an direct illumination type with 2 dual L-shape CCFLs(Cold Cathode Fluorescent Lamp).

The characteristics of 2 dual L-shape lamps are shown in the following tables. Ta= 25 ± 2 ˚C

| Parameter | SYMBOL | MIN. | TYP. | MAX. | UNIT | NOTE |
|---|---|---|---|---|---|---|
| Lamp Current | $I_L$ | 3.0 | 5.5 | 7.0 | $mA_{rms}$ | (1), See 4.2 |
| Lamp Voltage | $V_L$ | 1100 | 1130 | 1290 | $V_{rms}$ | (1) |
| Lamp Frequency | $f_L$ | (40) | 41 | (80) | kHz | (2) |
| Operating Life Time | $H_r$ | 30000 | 40000 | - | Hour | (3) 25℃ |
| Start Up Voltage | Vs | - | - | 0℃: 2010<br>25℃: 1670 | Vrms | (4) |

**Note) The waveform of the inverter output voltage must be area symmetric and the design of the inverter must have specifications for the modularized lamp.**

The performance of the back-light, for example life time or brightness, is much influenced by the characteristics of the DC-AC inverter for the lamp. So all the parameters of an inverter should be carefully designed so as not to produce too much leakage current from high-voltage output of the inverter.
When you design or order the inverter, please make sure that a poor lighting caused by the mismatch of the back-light and the inverter(miss lighting, flicker, etc.) never occur. When you confirm it, the module should be operated in the same condition as it is installed in your instrument.

Note (1) Lamp current is measured with current meter for high frequency as shown below.

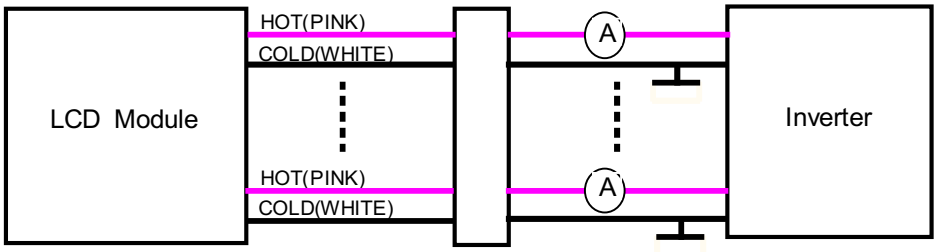


(2) Lamp frequency may produce interference with horizontal synchronous frequency and this may cause line flow on the display. Therefore, lamp frequency shall be detached from the horizontal synchronous frequency and its harmonics as far as possible in order to avoid interference.

(3) Life time (Hr) of a lamp is defined as the time in which it continues to operate under the condition of Ta = 25 ± 2 ˚C and IL =6.0mArms for a lamp until the brightness becomes 50% or lower than it's original value.

(4) The voltage above this value should be applied to the lamps for more than 1 second to startup. Otherwise the lamps may not to be turned on.

# 4. BLOCK DIAGRAM

## 4.1 TFT LCD MODULE

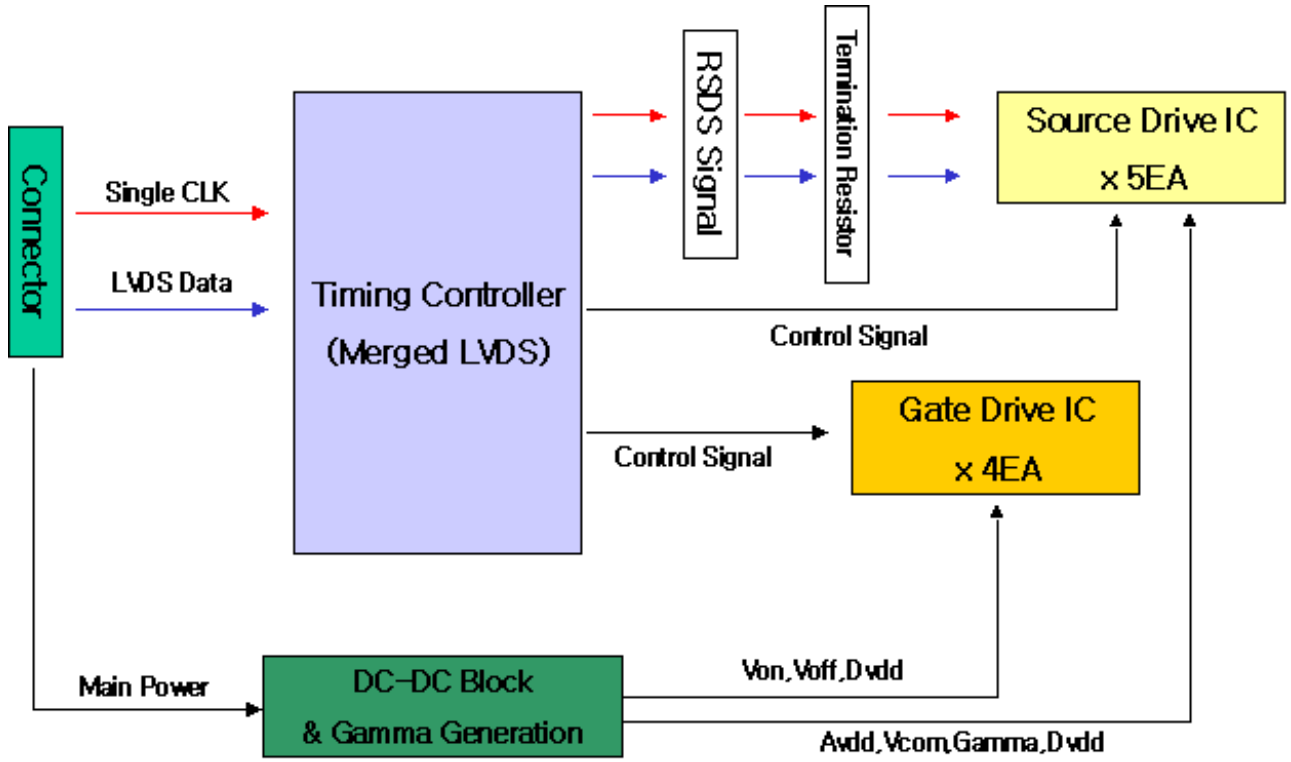


## 4.2 BACK-LIGHT UNIT

* Connector : YH20015HS-03(3Pin),YH20015HS-04(4Pin)

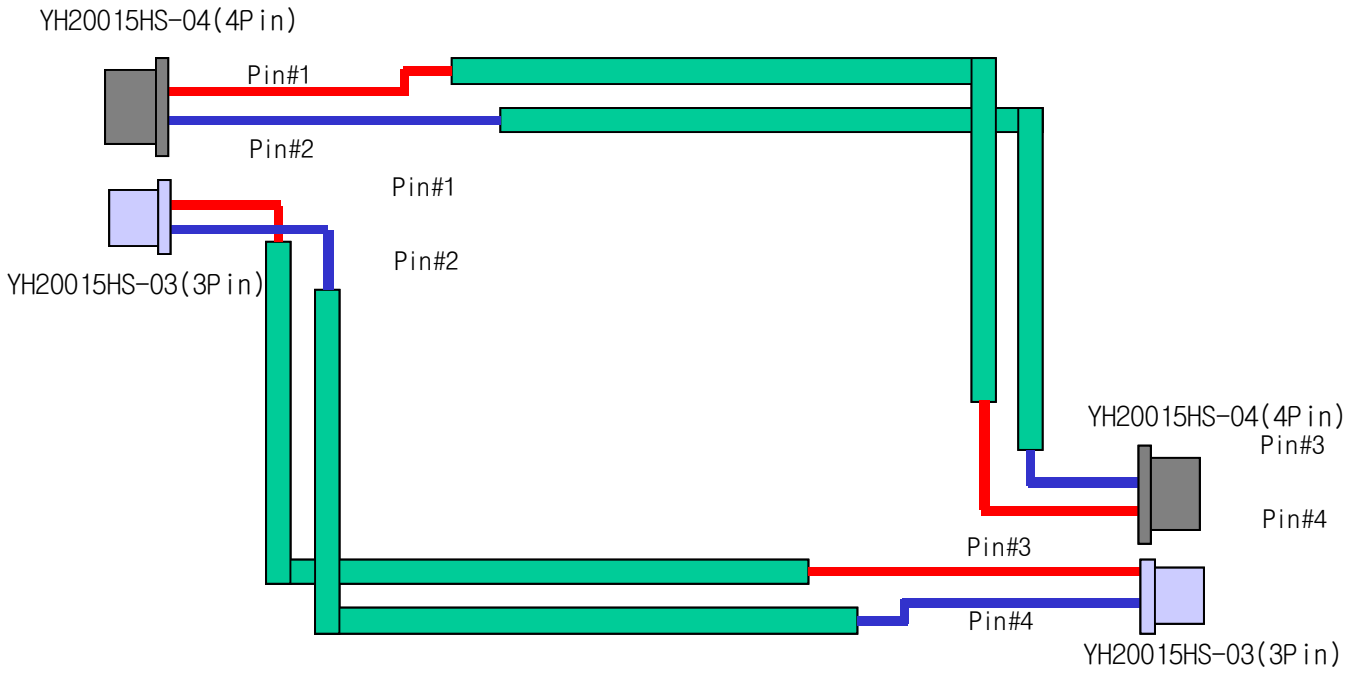

# 5. INPUT TERMINAL PIN ASSIGNMENT

## 5.1 Input Signal & Power

Connector: (DF14A-20P-1.25H / HIROSE )

| PIN NO | SYMBOL | FUNCTION |
|---|---|---|
| 1 | NC | No Connection |
| 2 | Gnd | Ground |
| 3 | Rx0- | Negative Transmission Data of Pixel 0 |
| 4 | Rx0+ | Positive Transmission Data of Pixel 0 |
| 5 | Gnd | Ground |
| 6 | Rx1- | Negative Transmission Data of Pixel 1 |
| 7 | Rx1+ | Positive Transmission Data of Pixel 1 |
| 8 | Gnd | Ground |
| 9 | Rx2- | Negative Transmission Data of Pixel 2 |
| 10 | Rx2+ | Positive Transmission Data of Pixel 2 |
| 11 | Gnd | Ground |
| 12 | Rclk- | Negative Sampling Clock |
| 13 | Rclk+ | Positive Sampling Clock |
| 14 | Gnd | Ground |
| 15 | Rx3- | Negative Transmission Data of Pixel 3 |
| 16 | Rx3+ | Positive Transmission Data of Pixel 3 |
| 17 | Gnd | Ground |
| 18 | Gnd | Ground |
| 19 | VDD | Power Supply : 5V |
| 20 | VDD | Power Supply : 5V |

## 5.2 Backlight Unit Input

### 5.2.1 YH20015HS-03(3Pin)

| Pin No. | Input | Color | Fucnction |
|---|---|---|---|
| 1 | Hot1 | Pink | High Voltage |
| 2 | Hot2 | Blue | High Voltage |
| 3 | Cold1 | Pink | Ground |
| 4 | Cold2 | Blue | Ground |
| Connector Part No. | YH20015HS-03 | | |

### 5.2.2 YH20015HS-04(4Pin)

| Pin No. | Input | Color | Fucnction |
|---|---|---|---|
| 1 | Hot1 | Pink | High Voltage |
| 2 | Hot2 | Blue | High Voltage |
| 3 | Cold1 | Pink | Ground |
| 4 | Cold2 | Blue | Ground |
| Connector Part No. | YH20015HS-04 | | |

## 5.3 Input Signal, Basic Display Colors and Gray Scale of Each Colors

| COLOR | DISPLAY (8bit) | DATA SIGNAL | | | | | | | | | | | | | | | | | | | | | | | | GRAY SCALE LEVEL |
|---|---|---|---|---|---|---|---|---|---|---|---|---|---|---|---|---|---|---|---|---|---|---|---|---|---|---|
| | | RED | | | | | | | | GREEN | | | | | | | | BLUE | | | | | | | | |
| | | R0 | R1 | R2 | R3 | R4 | R5 | R6 | R7 | G0 | G1 | G2 | G3 | G4 | G5 | G6 | G7 | B0 | B1 | B2 | B3 | B4 | B5 | B6 | B7 | |
| BASIC COLOR | BLACK | 0 | 0 | 0 | 0 | 0 | 0 | 0 | 0 | 0 | 0 | 0 | 0 | 0 | 0 | 0 | 0 | 0 | 0 | 0 | 0 | 0 | 0 | 0 | 0 | - |
| | BLUE | 0 | 0 | 0 | 0 | 0 | 0 | 0 | 0 | 0 | 0 | 0 | 0 | 0 | 0 | 0 | 0 | 1 | 1 | 1 | 1 | 1 | 1 | 1 | 1 | - |
| | GREEN | 0 | 0 | 0 | 0 | 0 | 0 | 0 | 0 | 1 | 1 | 1 | 1 | 1 | 1 | 1 | 1 | 0 | 0 | 0 | 0 | 0 | 0 | 0 | 0 | - |
| | CYAN | 0 | 0 | 0 | 0 | 0 | 0 | 0 | 0 | 1 | 1 | 1 | 1 | 1 | 1 | 1 | 1 | 1 | 1 | 1 | 1 | 1 | 1 | 1 | 1 | - |
| | RED | 1 | 1 | 1 | 1 | 1 | 1 | 1 | 1 | 0 | 0 | 0 | 0 | 0 | 0 | 0 | 0 | 0 | 0 | 0 | 0 | 0 | 0 | 0 | 0 | - |
| | MAGENTA | 1 | 1 | 1 | 1 | 1 | 1 | 1 | 1 | 0 | 0 | 0 | 0 | 0 | 0 | 0 | 0 | 1 | 1 | 1 | 1 | 1 | 1 | 1 | 1 | - |
| | YELLOW | 1 | 1 | 1 | 1 | 1 | 1 | 1 | 1 | 1 | 1 | 1 | 1 | 1 | 1 | 1 | 1 | 0 | 0 | 0 | 0 | 0 | 0 | 0 | 0 | - |
| | WHITE | 1 | 1 | 1 | 1 | 1 | 1 | 1 | 1 | 1 | 1 | 1 | 1 | 1 | 1 | 1 | 1 | 1 | 1 | 1 | 1 | 1 | 1 | 1 | 1 | - |
| GRAY SCALE OF RED | BLACK | 0 | 0 | 0 | 0 | 0 | 0 | 0 | 0 | 0 | 0 | 0 | 0 | 0 | 0 | 0 | 0 | 0 | 0 | 0 | 0 | 0 | 0 | 0 | 0 | R0 |
| | DARK ↑ | 1 | 0 | 0 | 0 | 0 | 0 | 0 | 0 | 0 | 0 | 0 | 0 | 0 | 0 | 0 | 0 | 0 | 0 | 0 | 0 | 0 | 0 | 0 | 0 | R1 |
| | | 0 | 1 | 0 | 0 | 0 | 0 | 0 | 0 | 0 | 0 | 0 | 0 | 0 | 0 | 0 | 0 | 0 | 0 | 0 | 0 | 0 | 0 | 0 | 0 | R2 |
| | | : | : | : | : | : | : | | | : | : | : | : | : | : | | | : | : | : | : | : | : | | | R3~ |
| | | : | : | : | : | : | : | | | : | : | : | : | : | : | | | : | : | : | : | : | : | | | R249 |
| | ↓ LIGHT | 1 | 0 | 1 | 1 | 1 | 1 | 1 | 1 | 0 | 0 | 0 | 0 | 0 | 0 | 0 | 0 | 0 | 0 | 0 | 0 | 0 | 0 | 0 | 0 | R250 |
| | | 0 | 1 | 1 | 1 | 1 | 1 | 1 | 1 | 0 | 0 | 0 | 0 | 0 | 0 | 0 | 0 | 0 | 0 | 0 | 0 | 0 | 0 | 0 | 0 | R251 |
| | RED | 1 | 1 | 1 | 1 | 1 | 1 | 1 | 1 | 0 | 0 | 0 | 0 | 0 | 0 | 0 | 0 | 0 | 0 | 0 | 0 | 0 | 0 | 0 | 0 | R252 |
| GRAY SCALE OF GREEN | BLACK | 0 | 0 | 0 | 0 | 0 | 0 | 0 | 0 | 0 | 0 | 0 | 0 | 0 | 0 | 0 | 0 | 0 | 0 | 0 | 0 | 0 | 0 | 0 | 0 | G0 |
| | DARK ↑ | 0 | 0 | 0 | 0 | 0 | 0 | 0 | 0 | 1 | 0 | 0 | 0 | 0 | 0 | 0 | 0 | 0 | 0 | 0 | 0 | 0 | 0 | 0 | 0 | G1 |
| | | 0 | 0 | 0 | 0 | 0 | 0 | 0 | 0 | 0 | 1 | 0 | 0 | 0 | 0 | 0 | 0 | 0 | 0 | 0 | 0 | 0 | 0 | 0 | 0 | G2 |
| | | : | : | : | : | : | : | | | : | : | : | : | : | : | | | : | : | : | : | : | : | | | G3~ |
| | | : | : | : | : | : | : | | | : | : | : | : | : | : | | | : | : | : | : | : | : | | | G249 |
| | ↓ LIGHT | 0 | 0 | 0 | 0 | 0 | 0 | 0 | 0 | 1 | 0 | 1 | 1 | 1 | 1 | 1 | 1 | 0 | 0 | 0 | 0 | 0 | 0 | 0 | 0 | G250 |
| | | 0 | 0 | 0 | 0 | 0 | 0 | 0 | 0 | 0 | 1 | 1 | 1 | 1 | 1 | 1 | 1 | 0 | 0 | 0 | 0 | 0 | 0 | 0 | 0 | G251 |
| | GREEN | 0 | 0 | 0 | 0 | 0 | 0 | 0 | 0 | 1 | 1 | 1 | 1 | 1 | 1 | 1 | 1 | 0 | 0 | 0 | 0 | 0 | 0 | 0 | 0 | G252 |
| GRAY SCALE OF BLUE | BLACK | 0 | 0 | 0 | 0 | 0 | 0 | 0 | 0 | 0 | 0 | 0 | 0 | 0 | 0 | 0 | 0 | 0 | 0 | 0 | 0 | 0 | 0 | 0 | 0 | B0 |
| | DARK ↑ | 0 | 0 | 0 | 0 | 0 | 0 | 0 | 0 | 0 | 0 | 0 | 0 | 0 | 0 | 0 | 0 | 1 | 0 | 0 | 0 | 0 | 0 | 0 | 0 | B1 |
| | | 0 | 0 | 0 | 0 | 0 | 0 | 0 | 0 | 0 | 0 | 0 | 0 | 0 | 0 | 0 | 0 | 0 | 1 | 0 | 0 | 0 | 0 | 0 | 0 | B2 |
| | | : | : | : | : | : | : | | | : | : | : | : | : | : | | | : | : | : | : | : | : | | | B3~ |
| | | : | : | : | : | : | : | | | : | : | : | : | : | : | | | : | : | : | : | : | : | | | B249 |
| | ↓ LIGHT | 0 | 0 | 0 | 0 | 0 | 0 | 0 | 0 | 0 | 0 | 0 | 0 | 0 | 0 | 0 | 0 | 1 | 0 | 1 | 1 | 1 | 1 | 1 | 1 | B250 |
| | | 0 | 0 | 0 | 0 | 0 | 0 | 0 | 0 | 0 | 0 | 0 | 0 | 0 | 0 | 0 | 0 | 0 | 1 | 1 | 1 | 1 | 1 | 1 | 1 | B251 |
| | BLUE | 0 | 0 | 0 | 0 | 0 | 0 | 0 | 0 | 0 | 0 | 0 | 0 | 0 | 0 | 0 | 0 | 1 | 1 | 1 | 1 | 1 | 1 | 1 | 1 | B252 |

Note) ✓ Definition of Gray :

Rn : Red Gray, Gn : Green Gray, Bn : Blue Gray (n = Gray level)

✓ Input Signal : 0 = Low level voltage, 1 = High level voltage

# 6. INTERFACE TIMING

## 6.1 Timing Parameters ( DE only mode )

| SIGNAL | ITEM | SYMBOL | MIN. | TYP. | MAX. | UNIT | NOTE |
|---|---|---|---|---|---|---|---|
| Clock | Frequency | $1/T_C$ | 20 | 25.83 | 40 | MHz | (1),(2) |
| | Hgh Time | $T_{CH}$ | 4 | - | - | nsec | |
| | Low Time | $T_{CL}$ | 4 | - | - | nsec | |
| Data | Setup Time | $T_{DS}$ | 4 | - | - | nsec | |
| | Hold Time | $T_{DH}$ | 4 | - | - | nsec | |
| Data Enable | Setup Time | $T_{ES}$ | 4 | - | - | nsec | |
| Frame Frequency | Cycle | Tv | - | 16.7 | - | msec | |
| | | | 485 | 525 | 627 | lines | |
| Vertical Active Display Term | Display Period | $T_{VD}$ | - | 480 | - | lines | (3) |
| | Vertical Blank Period | $T_{VB}$ | 2 | 46 | - | lines | |
| One Line Scanning Time | Cycle | $T_H$ | 675 | 820 | 1056 | clocks | |
| Horizontal Active Display Term | Display Period | $T_{HD}$ | - | 640 | - | clocks | (3) |

Note

(1) Test Point : TTL control signal and CLK at LVDS Tx input terminal in system

(2) Internal Vcc = 3.3 V, Frame rate = 60Hz

(3) The fixed Active Valid period(unchangeable)

## 6.2 LVDS Interface

- LVDS Receiver : T-con (LVDS Rx merged)

### 6.2.1 Pixel Data

| Pin No. | Name | RGB Signal | Pin No. | Name | RGB Signal |
|---|---|---|---|---|---|
| 51 | TxIN0 | R0 | 8 | TxIN10 | G6 |
| 52 | TxIN1 | R1 | 10 | TxIN11 | G7 |
| 54 | TxIN2 | R2 | 15 | TxIN15 | B0 |
| 55 | TxIN3 | R3 | 19 | TxIN18 | B1 |
| 56 | TxIN4 | R4 | 20 | TxIN19 | B2 |
| 3 | TxIN6 | R5 | 22 | TxIN20 | B3 |
| 50 | TxIN27 | R6 | 23 | TxIN21 | B4 |
| 2 | TxIN5 | R7 | 24 | TxIN22 | B5 |
| 4 | TxIN7 | G0 | 16 | TxIN16 | B6 |
| 6 | TxIN8 | G1 | 18 | TxIN17 | B7 |
| 7 | TxIN9 | G2 | 27 | TxIN24 | Hsync |
| 11 | TxIN12 | G3 | 28 | TxIN25 | Vsync |
| 12 | TxIN13 | G4 | 30 | TxIN26 | DE |
| 14 | TxIN14 | G5 | 31 | TxCLKIN | Clock |

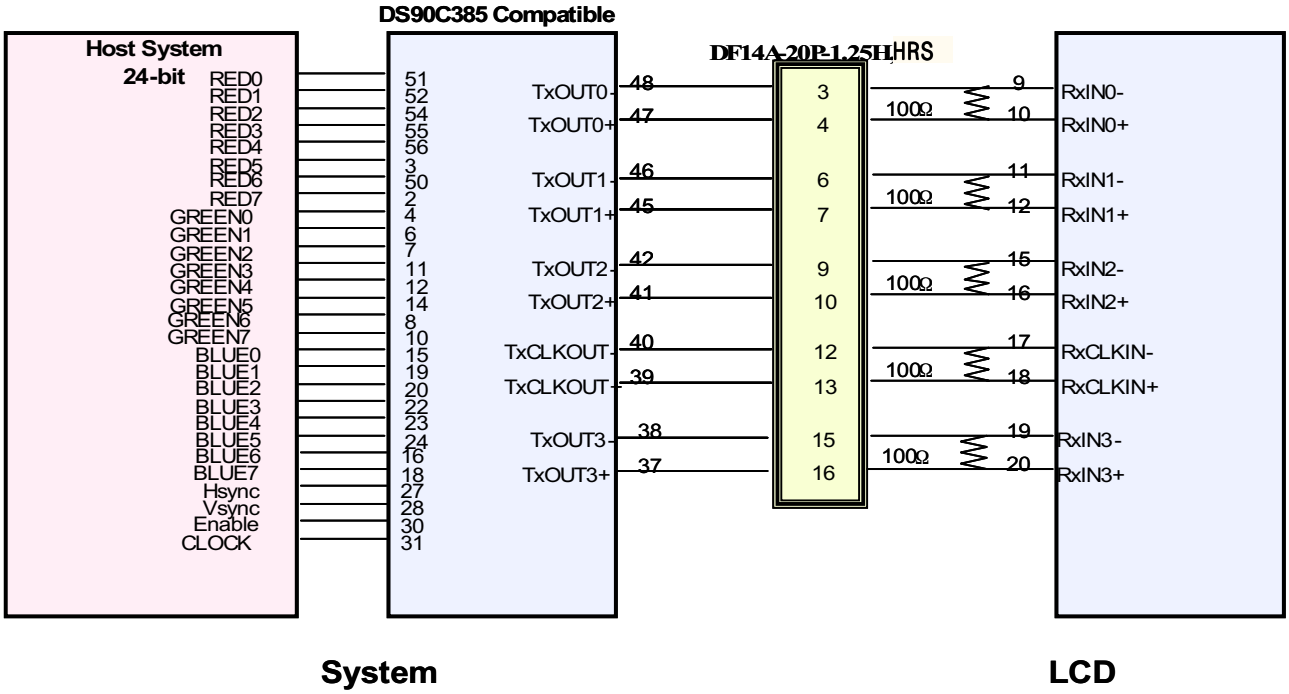

6.3 Timing diagrams of interface signal ( DE only mode )

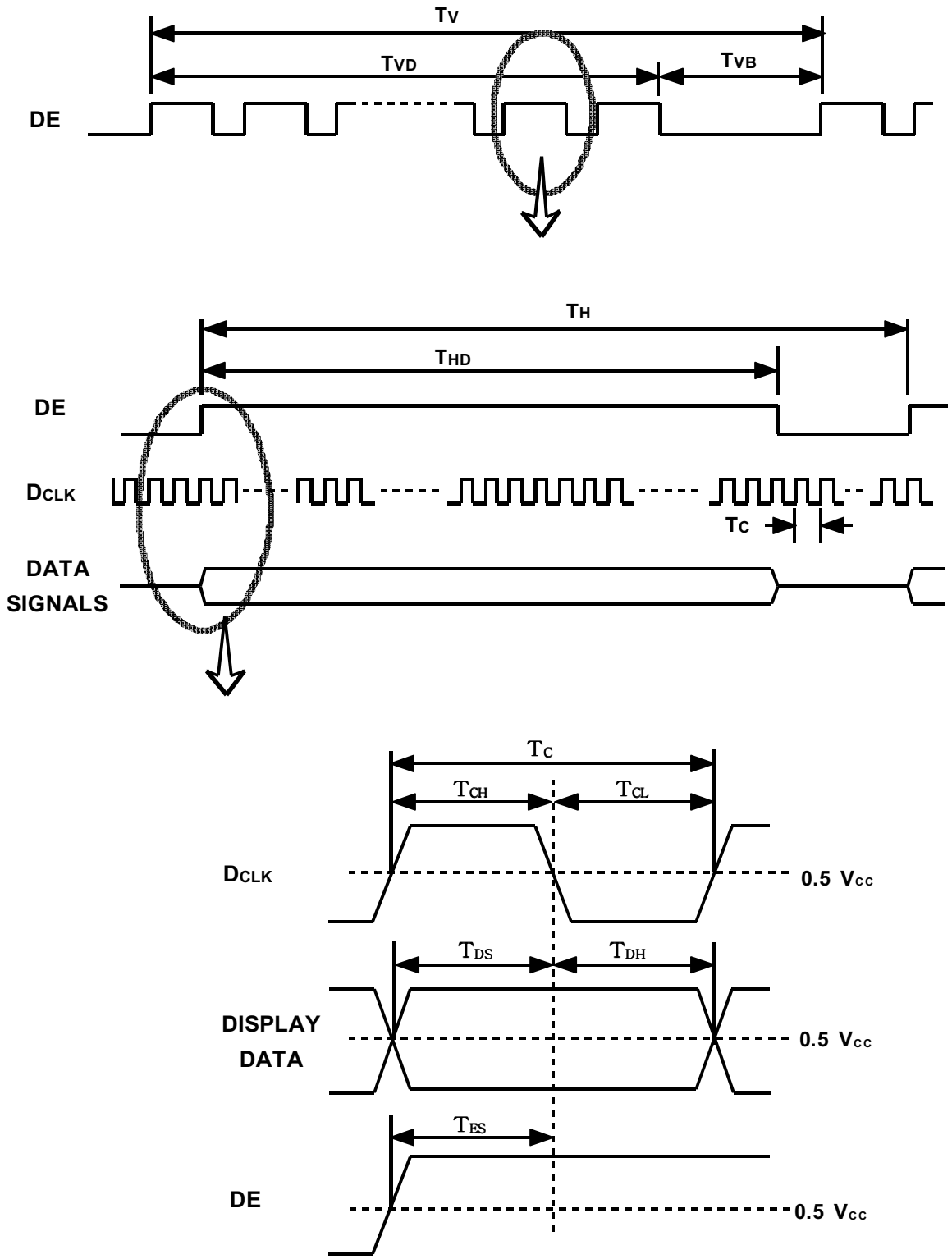

6.4 Power ON/OFF Sequence

: To prevent a latch-up or DC operation of the LCD module, the power on/off sequence should be as the diagram below.

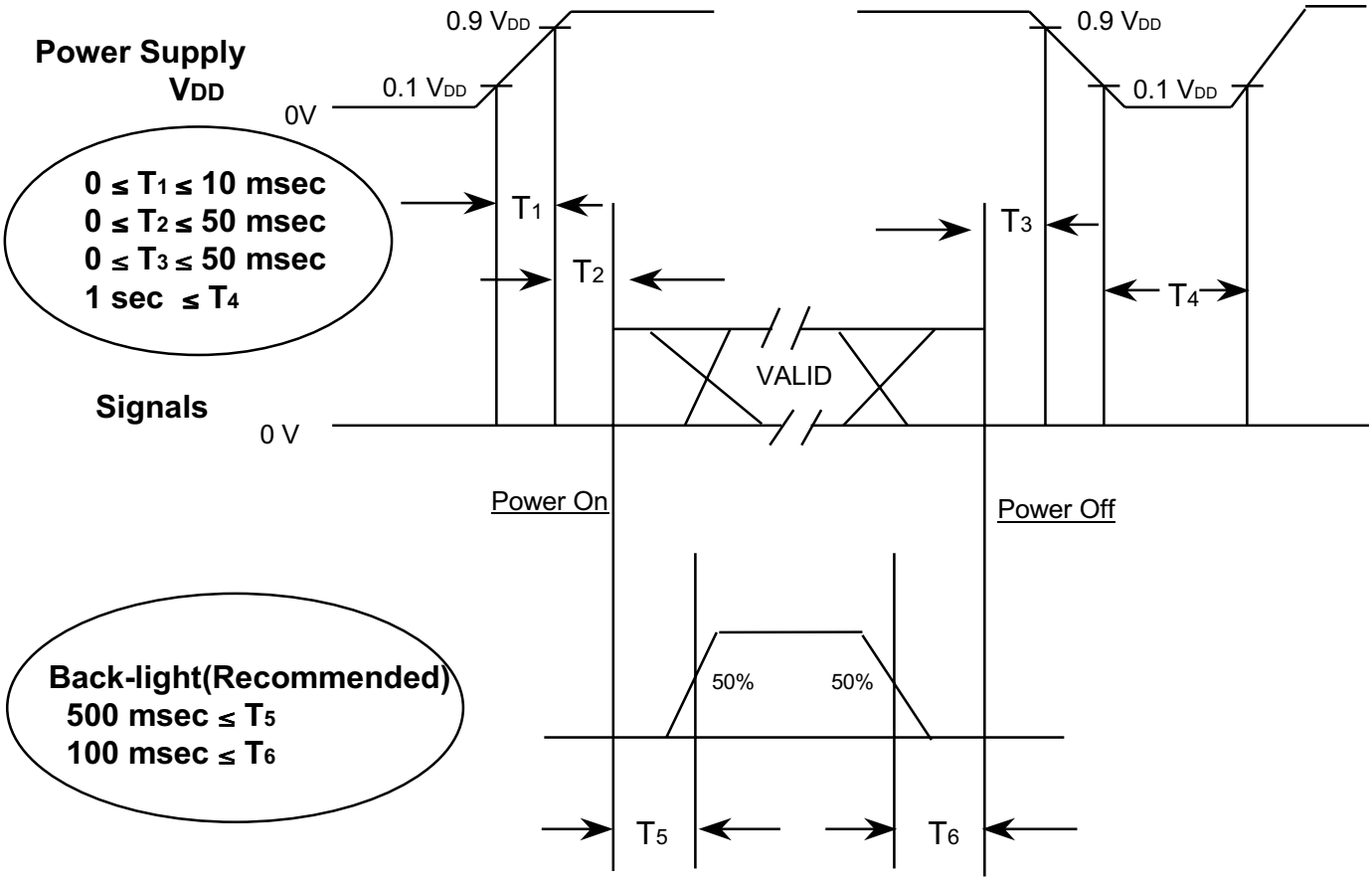


Power ON/OFF Sequence

NOTE.

(1) The supply voltage of the external system for the module input should be the same as the definition of $V_{DD}$.

(2) Apply the lamp voltage within the LCD operation range. When the back-light turns on before the LCD operation or the LCD turns off before the back-light turns off, the display may momentarily become white.

(3) In case of $V_{DD}$ = off level, please keep the level of input signals on the low or keep a high impedance.

(4) T4 should be measured after the module has been fully discharged between power off and on period.

(5) Interface signal shall not be kept at high impedance when the power is on.

## 7. OUTLINE DIMENSION

**: Refer to another file**

## 8. PACKING

8.1 CARTON(Internal Package)

(1) Packing Form

Corrugated fiberboard box and corrugated cardboard as shock absorber

(2) Packing Method

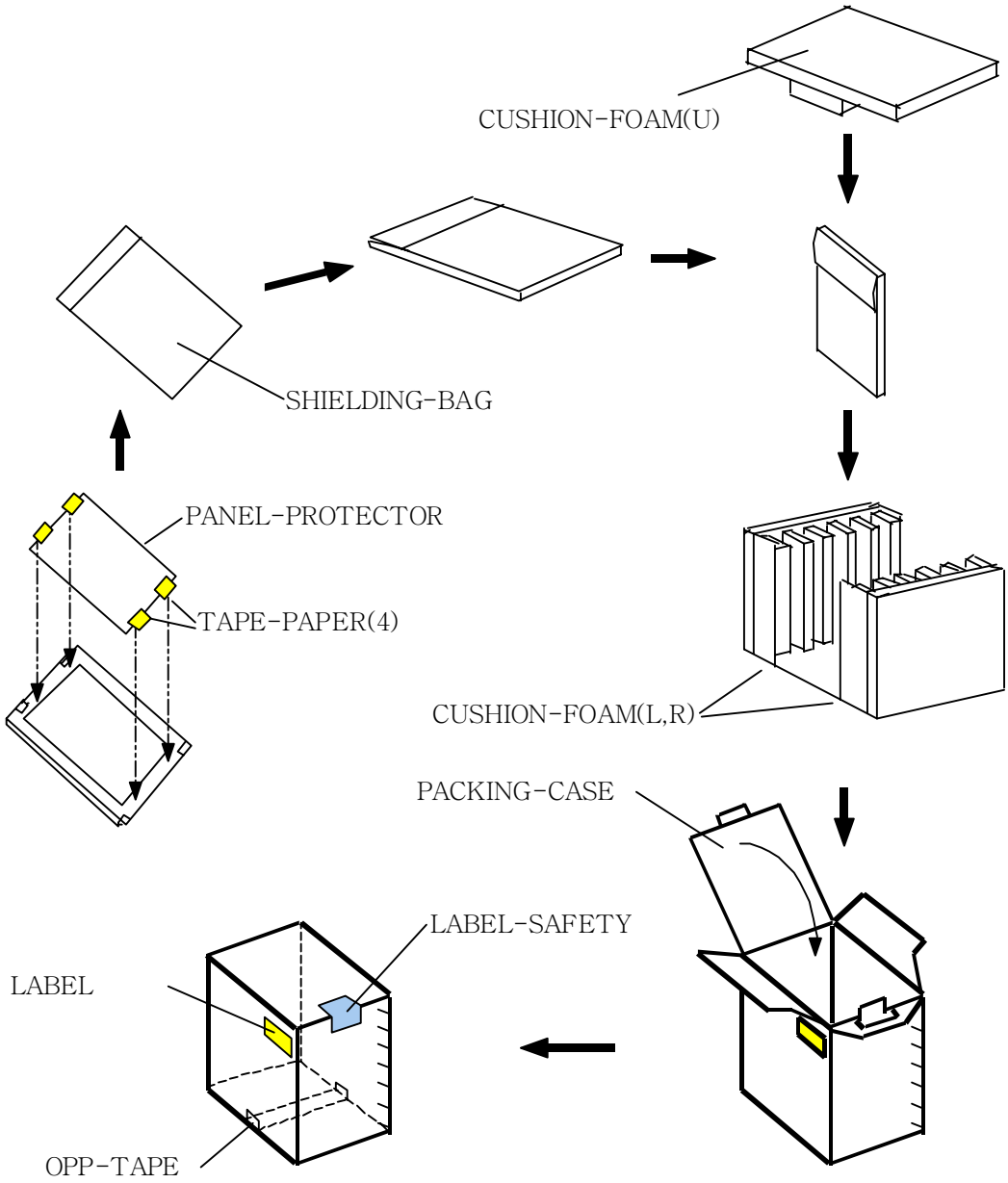


* NOTE

1) TOTAL : Approx. 12.0㎏
2) Acceptance number of piling : 5 sets
3) Carton size : 340 (W) X 349 (D) X 454 (H)
4) MAX accumulation quantity : 5 cartons

(3) Packing Material

| No | Part name | Quantity | No | Part name | Quantity |
|---|---|---|---|---|---|
| 1 | PROTECTOR-PANEL | 1 | 6 | SHIELDING-BAG | 1 |
| 2 | TAPE-PAPER | 0.2MT | 7 | OPP-TAPE | 0.2MT |
| 3 | PACKING-CASE | 0.2 | 8 | LABEL-PAPER | 1 |
| 4 | CUSHION-FOAM(U) | 0.2 | 9 | LABEL-SAFETY | 1 |
| 5 | CUSHION-FOAM(L) | 0.2 | 10 | LABEL-BARCODE | 1 |

## 9. MARKING & OTHERS

A nameplate bearing followed by is affixed to a shipped product at the specified location on each product.

(1) Parts number : LTA170V1-L01

(2) Revision : One letter

(3) Control : One letter

(4) Lot number : 5 D 3 B 001 01 C

① ② ③ ④ ⑤ ⑥ ⑦

① 5 : Line
② D : Device
③ 3 : Year
④ B : Month
⑤ 001 : LOT NO
⑥ 01 : GLASS NO
⑦ C : CELL NO

(5) Nameplate Indication

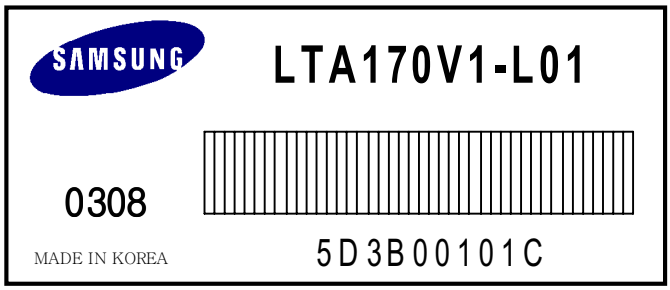


Week code : 00 00

Month

Year

(6) Bar code marking for Customer

The bar code marking is attached to module backside.

1) MODEL NAME : LTA170V1-L01
2) SAMSUNG
3) MADE IN KOREA
4) PRODUCTION NUMBER
5) USER MODEL NAME

Bar code shows

a) User model name
LTV170V1-L01

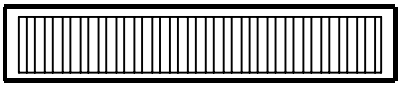

SAMSUNG
MADE IN KOREA

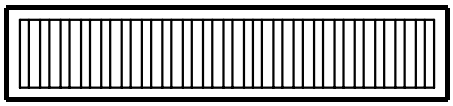

*6430008B*

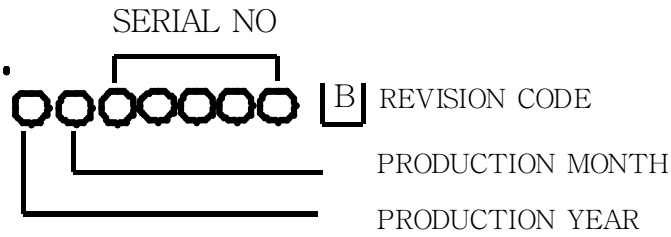


(7) Packing box attach

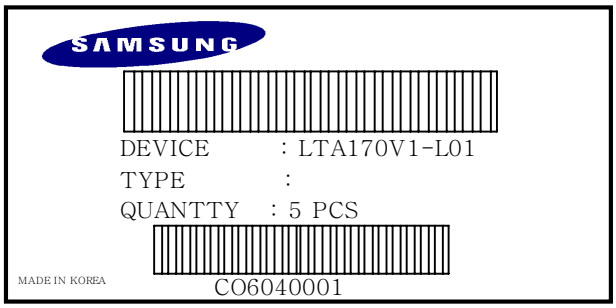


(8) Others

1. After service part

| Part Name | Description |
|---|---|
| ASS'Y-LAMP(U) | ASS'Y 170V1-LAMP(U) |
| ASS'Y-LAMP(L) | ASS'Y 170V1-LAMP(L) |

## 10. General Precautions

10.1 Handling

(a) When the module is assembled, It should be attached to the system firmly using every mounting holes. Be careful not to twist and bend the modules.

(b) Refrain from strong mechanical shock and / or any force to the module. In addition to damage, this may cause improper operation or damage to the module and CCFT back-light.

(c) Note that polarizers are very fragile and could be easily damaged. Do not press or scratch the surface harder than a HB pencil lead.

(d) Wipe off water droplets or oil immediately. If you leave the droplets for a long time, Staining and discoloration may occur.

(e) If the surface of the polarizer is dirty, clean it using some absorbent cotton or soft cloth.

(f) The desirable cleaners are water, IPA(Isopropyl Alcohol) or Hexane.
Do not use Ketone type materials(ex. Acetone), Ethyl alcohol, Toluene, Ethyl acid or Methyl chloride. It might permanent damage to the polarizer due to chemical reaction.

(g) If the liquid crystal material leaks from the panel, it should be kept away from the eyes or mouth . In case of contact with hands, legs or clothes, it must be washed away thoroughly with soap.

(h) Protect the module from static , it may cause damage to the C-MOS Gate Array IC.

(i) Use finger-stalls with soft gloves in order to keep display clean during the incoming inspection and assembly process.

(j) Do not disassemble the module.

(k) Do not pull or fold the lamp wire.

(l) Do not adjust the variable resistor which is located on the back side.

(m) Pins of I/F connector shall not be touched directly with bare hands.

10.2 Storage

(a) Do not leave the module in high temperature, and high humidity for a long time. It is highly recommended to store the module with temperature from 0 to 35 °C and relative humidity of less than 70%.

(b) Do not store the TFT-LCD module in direct sunlight.

(c) The module shall be stored in a dark place. It is prohibited to apply sunlight or fluorescent light during the store.

10.3. Operation

(a) Do not connect, disconnect the module in the " Power On" condition.

(b) Power supply should always be turned on/off by following item 6.6 " Power on/off sequence ".

(c) Module has high frequency circuits. Sufficient suppression to the electromagnetic interference shall be done by system manufacturers. Grounding and shielding methods may be important to minimize the interference.

(d) The cable between the back-light connector and its inverter power supply shall be a minimized length and be connected directly . The longer cable between the back-light and the inverter may cause lower luminance of lamp(CCFT) and may require higher startup voltage(Vs).

10.4 Others

(a) Ultra-violet ray filter is necessary for outdoor operation.

(b) Avoid condensation of water. It may result in improper operation or disconnection of electrode.

(c) Do not exceed the absolute maximum rating value. ( the supply voltage variation, input voltage variation, variation in part contents and environmental temperature, so on) Otherwise the module may be damaged.

(d) If the module displays the same pattern continuously for a long period of time, it can be the situation when the image "sticks" to the screen.

(e) This module has its circuitry PCB's on the rear side and should be handled carefully in order not to be stressed.