SAMSUNG ELECTRONICS

Product Information

Customer : General

DATE : 16.Oct. 2007

SAMSUNG TFT-LCD

MODEL : **LTA460HH-LH3**

The Information Described in this Specification is Preliminary and can be changed without prior notice

APPROVAED BY	DATE	PREPARED BY	DATE
Kyunghwan Ko	16.Oct.2007	Sun-ok. Song	16.Oct.2007

LCD Business

Samsung Electronics Co . , LTD.

Contents

Revision History ---------- (3)

General Description ---------- (4)

General Information ---------- (4)

1. Absolute Maximum Ratings ---------- (5)

2. Optical Characteristics ---------- (7)

3. Electrical Characteristics ---------- (10)
   3.1 TFT LCD Module
   3.2 Back Light Unit
   3.3 Inverter Input & Specification

4. Input Terminal Pin Assignment ---------- (13)
   4.1 Input Signal & Power
   4.2 Inverter Input Pin Configuration
   4.3 Inverter Input Power Sequence
   4.4 LVDS Interface
   4.5 Input Signals, Basic Display Colors and Gray Scale of Each Color

5. Interface Timing ---------- (18)
   5.1 Timing Parameters (DE only mode)
   5.2 Timing Diagrams of interface Signal (DE only mode)
   5.3 Power ON/OFF Sequence

6. Outline Dimension ---------- (21)

7. Packing ---------- (23)

8. Marking & Others ---------- (24)

9. General Precaution ---------- (25)
   9.1 Handling
   9.2 Storage
   9.3 Operation
   9.4 Operation Condition Guide
   9.5 Others

* Revision History

Date	Rev. No	Page	Summary
Oct.16 2006	000	all	First issued

General Description

Description

LTA460HH-LH3 is a color active matrix liquid crystal display (LCD) that uses amorphous silicon TFT(Thin Film Transistor) as switching components. This model is composed of a TFT LCD panel, a driver circuit and a back light unit. The resolution of a 46.0“ is 1920 x 1080 and this model can display up to 16.7 million colors with wide viewing angle of 89° or higher in all directions. This panel is intended to support applications to provide a excellent performance for Flat Panel Display such as Home-alone Multimedia TFT-LCD TV and High Definition TV.

Features

- RoHS compliance (Pb-free)
- High contrast & aperture ratio with wide color gamut
- SPVA(Super Patterned Vertical Align) mode
- Wide viewing angle (±178°)
- High speed response & Natural Motion (DFR: Double Frame Rate)
- FHD resolution (16:9)
- Low Power consumption
- Direct Type 24 CCFLs (Cold Cathode Fluorescent Lamp)
- DE(Data Enable) mode
- LVDS (Low Voltage Differential Signaling) interface (4pixel/clock)

General Information

Items	Specification	Unit	Note
Module Size	1083.0(H_{Typ}) x 627.0 (V_{Typ})	mm	±1.0mm
	57.5 (D_{MAX})		
Weight	17,000 (Max.)	g	
Pixel Pitch	0.53025(H) x 0.53025(W)	mm	
Active Display Area	1018.08(H) x 572.67(V)	mm	
Surface Treatment	Haze 44% , Hard-coating (3H)		
Display Colors	8 bit - 16.7M	colors	
Number of Pixels	1920x 1080	pixel	
Pixel Arrangement	RGB vertical stripe		
Display Mode	Normally Black		
Luminance of White	500 (Typ.)	cd/m^2	

1. Absolute Maximum Ratings

If the condition exceeds maximum ratings, it can cause malfunction or unrecoverable damage to the device.

Item		Symbol		Min.	Max.	Unit	Note
Power Supply Voltage		V_{DD}		GND-1	*13.0*	V	(1)
Storage temperature		T_{STG}		-20	60	℃	(2)
Glass surface temperature (Operation)	Center	T_{OPR}		0	50	℃	(2),(5)
	T. Uniformity	△T		-	10		
Shock (non - operating)		S_{NOP}	X,Y	-	40	G	(3)
			Z	-	30		
Vibration (non - operating)		V_{NOP}		-	1.5	G	(4)

Note (1) Ta= 25 ±2 °C

(2) Temperature and relative humidity range are shown in the figure below.
a. 90 % RH Max. (Ta ≤ 39 °C)
b. Relative Humidity is 90% or less. (Ta > 39 °C)
c. No condensation

(3) 11ms, sine wave, one time for ±X, ±Y, ±Z axis

(4) 10-300 Hz, Sweep rate 10min, 30min for X,Y,Z axis

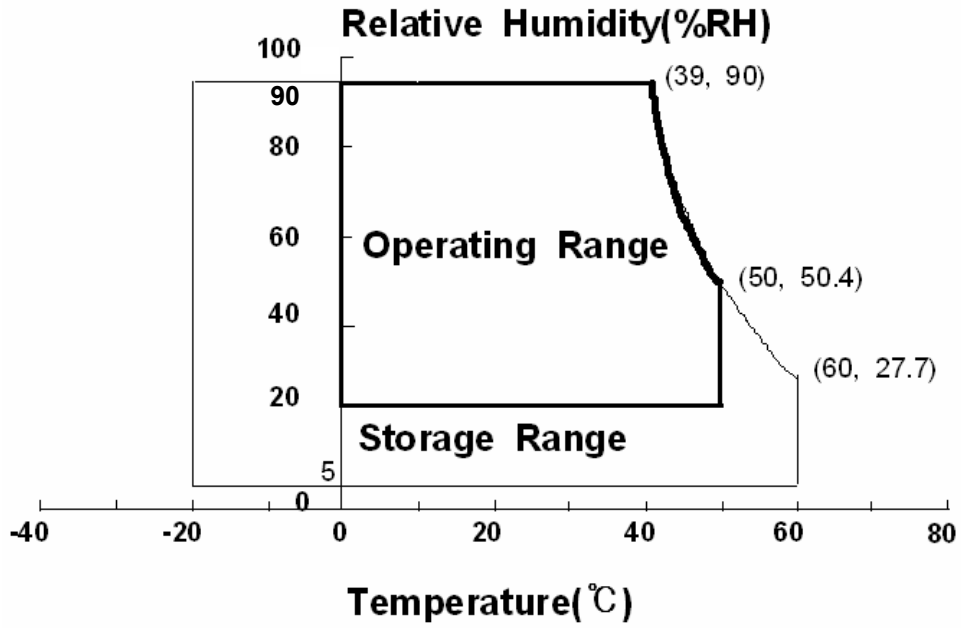

Fig. Temperature and Relative humidity range

(5) Definition of test point

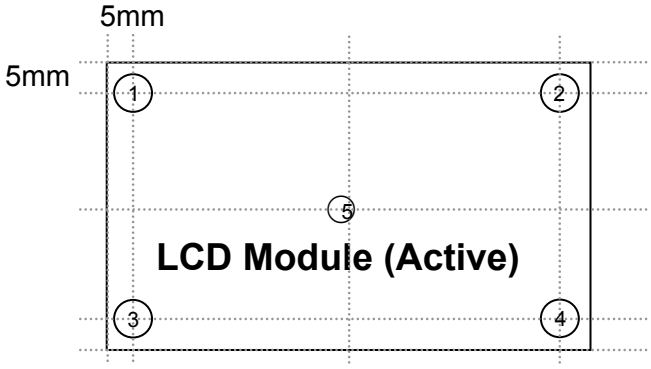

△T should be less than *10* ℃ (△T = | T_{OPR} – T_{MAX}|)

T_{OPR} : Temperature of the center of the glass surface (Test point 5)
T1~ T4 : Temperature of each edge of the glass surface
T_{MAX} : The highest temperature of the glass surface

2. Optical Characteristics

The optical characteristics should be measured in a dark room or equivalent.
Measuring equipment : TOPCON RD-80S, TOPCON SR-3, ELDIM EZ-CONTRAST

(Ta = 25 ±2°C, VDD=12V, fv= 120Hz, f_{DCLK} =297MHz)

Item		Symbol	Condition	Min.	Typ.	Max.	Unit	Note
Contrast Ratio (Center of screen)		C/R	Normal θ**L,R**=0 θ**U,D**=0 Viewing Angle	1200	2000	-		(1) SR-3
Response Time	Rising	Tr		-	10	18	msec	(3) RD-80S
	Falling	Tf		-	6	10		
	G-to-G (AVG.)	Tg		-	6	-		
Luminance of White (Center of screen)		Y_L		400	500	-	cd/m²	(4) SR-3
Color Chromaticity (CIE 1931)	Red	Rx		TYP. -0.03	0.655	TYP. +0.03		(5),(6) SR-3
		Ry			0.325			
	Green	Gx			0.213			
		Gy			0.668			
	Blue	Bx			0.148			
		By			0.069			
	White	Wx			0.280			
		Wy			0.290			
Color Gamut		-		-	90	-	%	(5) SR-3
Color Temperature		-		-	10000	-	K	(5) SR-3
Viewing Angle	Hor.	θ_L	C/R≥10	75	89	-	Degree	(6) EZ-Contrast
		θ_R		75	89	-		
	Ver.	θ_U		75	89	-		
		θ_D		75	89	-		
Brightness Uniformity (9 Points)		B_{uni}		-	-	25	%	(2) SR-3

- Test Equipment Setup

The measurement should be executed in a stable, windless and dark room between 40min and 60min after lighting the back light at the given temperature for stabilization of the back light. This should be measured in the center of screen.

Environment condition : Ta = 25 ±2 °C

Photo detector	Field
SR-3	1°
RD-80S	2°

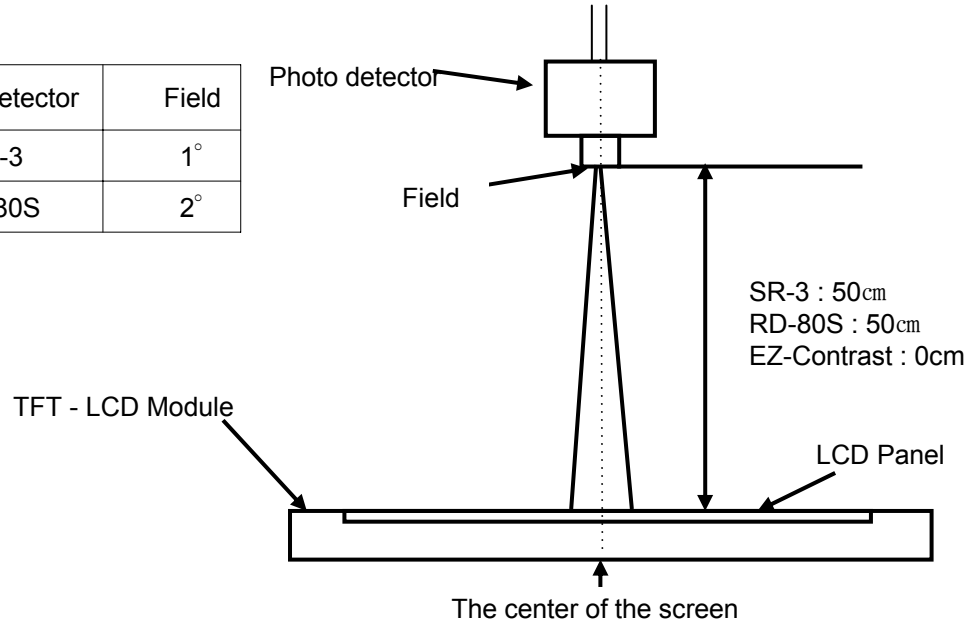

- Definition of test point

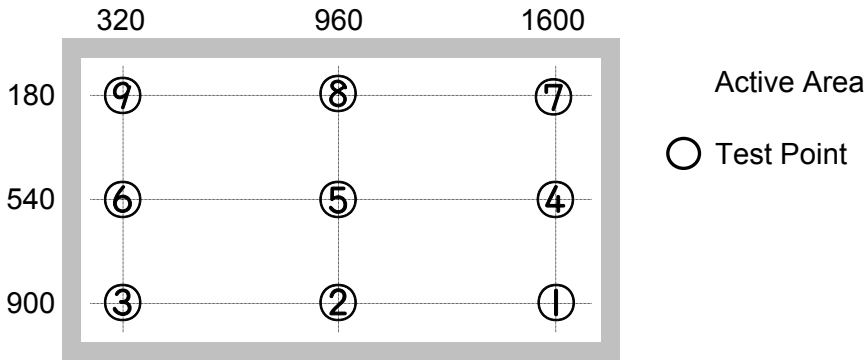

Note (1) Definition of Contrast Ratio (C/R)
: Ratio of gray max (Gmax) & gray min (Gmin) at the center point ⑤ of the panel

$$C/R = \frac{G\max}{G\min}$$

Gmax : Luminance with all pixels white
Gmin : Luminance with all pixels black

Note (2) Definition of 9 points brightness uniformity (Test pattern : Full White)

$$Buni = 100 * \frac{(B\max - B\min)}{B\max}$$

Bmax : Maximum brightness
Bmin : Minimum brightness

Note (3) Definition of Response time : Sum of Tr, Tf

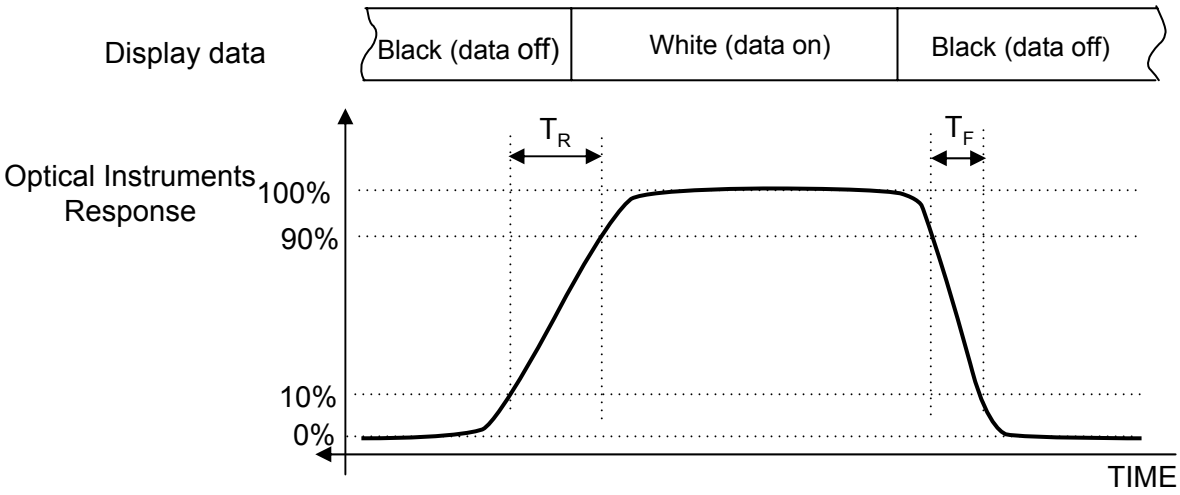

Note (4) Definition of Luminance of White : Luminance of white at center point ⑤

Note (5) Definition of Color Chromaticity (CIE 1931)
Color coordinate of Red, Green, Blue & White at center point ⑤

Note (6) Definition of Viewing Angle
: Viewing angle range (C/R ⩾10)

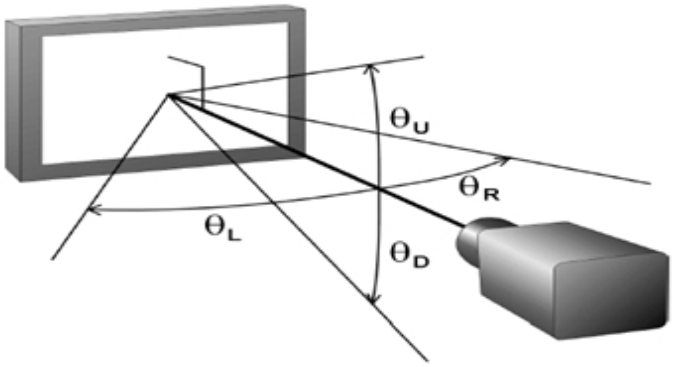

3. Electrical Characteristics

3.1 TFT LCD Module

The connector for display data & timing signal should be connected.

Ta = 25°C ±2°C

Item		Symbol	Min.	Typ.	Max.	Unit	Note
Voltage of Power Supply		V_{DD}	11	12	13	V	(1)
Current of Power Supply	(a) Black	I_{DD}	-	1100	-	mA	(2),(3)
	(b) White		-	1050	-	mA	
	(c) N-Pattern		-	2100	2400	mA	
Vsync Frequency		f_V	95	120	130	Hz	-
Hsync Frequency		f_H	120	135	140	kHz	
Main Frequency		f_{DCLK}	270	297	307	MHz	
Rush Current		I_{RUSH}	-	-	6	A	(4)

Note (1) The ripple voltage should be controlled under 10% of V_{DD}.

(2) fv=120Hz, f_{DCLK} = 297MHz, V_{DD} = 12.0V, DC Current.

(3) Power dissipation check pattern (LCD Module only)

a) Black Pattern b) White Pattern c) N-Pattern

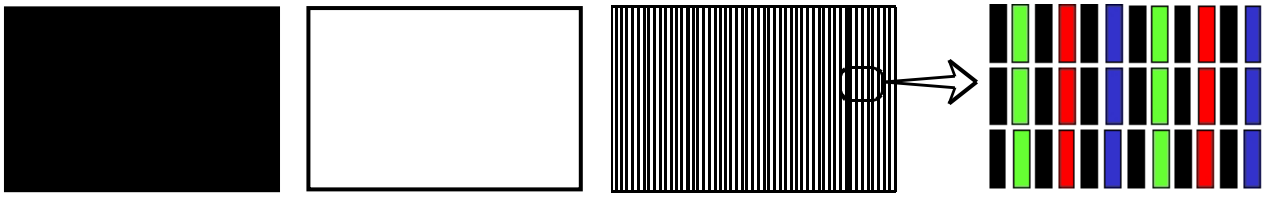

(4) Measurement Conditions

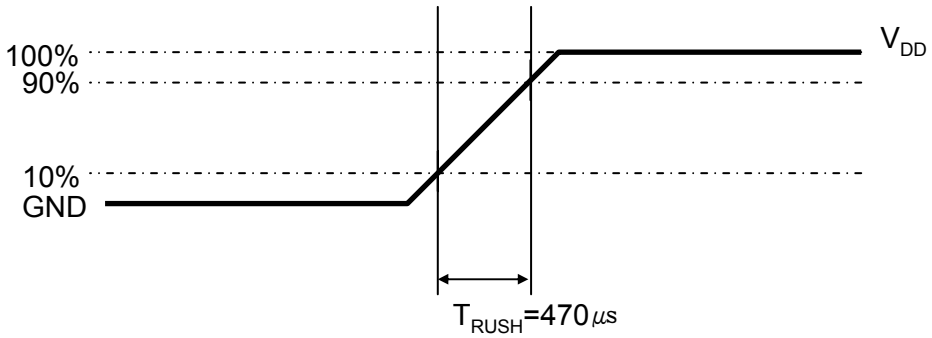

Rush Current I_{RUSH} can be measured when T_{RUSH}. is 470μs.

3.2 Back Light Unit

The back light unit contains 24 direct-lighting type CCFLs (Cold Cathode Fluorescent Lamp).

Ta=25 ±2°C

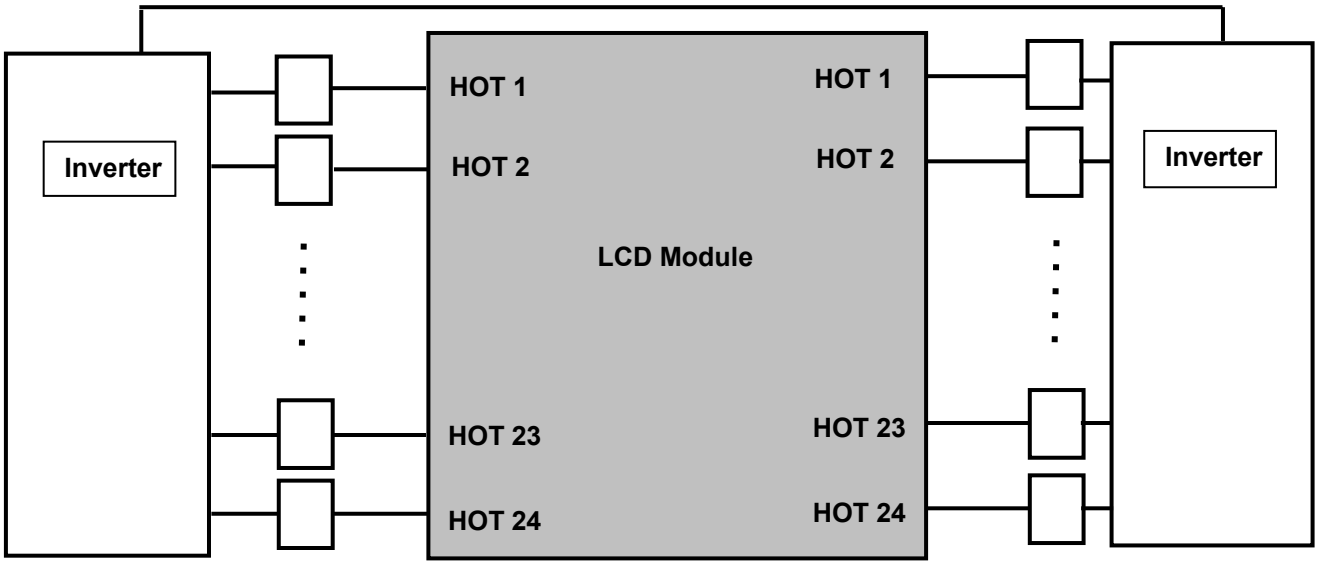

Item	Symbol	Min.	Typ.	Max.	Unit	Note
Operating Life Time	Hr	-	30,000	-	Hour	(1)

Note (1) It is defined as the time to take until the brightness reduces to 50% of its original value.
[Operating condition : Ta = 25±2℃ , I_L =7mA , For single lamp only.]

3.3 Inverter Input Condition & Specification

Items	Symbol	Conditions	Specifications			Unit	Note
			Min.	Typ.	Max.		
Input Voltage	V_{IN}	Ta=25±2 °C	22.8	24	25.2	V	-
Input Current	I_{IN}	Vin=24.0V Vdim=3.3V	-	-	12	A	After 1 hour Warm-up
Lamp Current	$I_{o,max}$	Vdim=3.3 V, PWM=100%	5.5	6	6.5	mArms	
Frequency	F_{LAMP}	Vin=24.0 V	60	62.5	65	kHz	-
Backlight On/Off	ON	Vin=24.0 V	2.4	-	5.5	V	-
	OFF	Vin=24.0 V	0	-	0.8		
Dimming Control	V_{DIM}	Max Lum	3.3	-	-	V	-
		Min. Lum	-		0		

Note) Power Consumption is measured when 500[cd/m^2] of luminance which is the typical luminance.
Lamp Current is measured at the point before Lamp.

4. Input Terminal Pin Assignment

4.1. Input Signal & Power Connector : FI-RE41S-HF (JAE)

Pin	Description		Pin	Symbol	Description
1	Vdd(12V)		21	ODD LVDS SIGNAL	Rx1[3]P
2	Vdd(12V)		22		Rx1[4]N
3	Vdd(12V)		23		Rx1[4]P
4	Vdd(12V)		24		GND
5	Vdd(12V)		25		Rx3[0]N
6	GND		26		Rx3[0]P
7	GND		27		Rx3[1]N
8	GND		28		Rx3[1]P
9	GND		29		Rx3[2]N
10	ODD LVDS SIGNAL	Rx1[0]N	30		Rx3[2]P
11		Rx1[0]P	31		GND
12		Rx1[1]N	32		Rx3CLK-
13		Rx1[1]P	33		Rx3CLK+
14		Rx1[2]N	34		GND
15		Rx1[2]P	35		Rx3[3]N
16		GND	36		Rx3[3]P
17		Rx1CLK-	37		Rx3[4]N
18		Rx1CLK+	38		Rx3[4]P
19		GND	39	GND	
20		Rx1[3]N	40	No Connection	
			41	No Connection	

Note) No Connection: This PINS are only used for SAMSUNG internal using.

4.1.2 Input Signal & Power Connector : FI-RE51S-HF (JAE)

Pin	Description		Pin	Description	
1	Vdd(12V)		26	EVEN LVDS SIGNAL	Rx4[0]P
2	Vdd(12V)		27		Rx4[1]N
3	Vdd(12V)		28		Rx4[1]P
4	Vdd(12V)		29		Rx4[2]N
5	Vdd(12V)		30		Rx4[2]P
6	GND		31		GND
7	GND		32		Rx4CLK-
8	GND		33		Rx4CLK+
9	GND		34		GND
10	EVEN LVDS SIGNAL	Rx2[0]N	35		Rx4[3]N
11		Rx2[0]P	36		Rx4[3]P
12		Rx2[1]N	37		Rx4[4]N
13		Rx2[1]P	38		Rx4[4]P
14		Rx2[2]N	39	GND	
15		Rx2[2]P	40	No Connection	
16		GND	41	No Connection	
17		Rx2CLK-	42	No Connection	
18		Rx2CLK+	43	No Connection	
19		GND	44	No Connection	
20		Rx2[3]N	45	LVDS Option * Note1	
21		Rx2[3]P	46	No Connection	
22		Rx2[4]N	47	No Connection	
23		Rx2[4]P	48	No Connection	
24		GND	49	No Connection	
25		Rx4[0]N	50	No Connection	
			51	No Connection	

(NOTE1) No connection : This Pins are only used for SAMSUNG internal using
(1) LVDS OPTION : If this PIN HIGH (3.3V) → Normal LVDS format
LOW (GND or N.C) → JEIDA LVDS format
SEQUECE : ON = VDD(T1) ≥ LVDS Option ≥ Interface Signal(T2)
OFF = Interface Signal(T3) ≥ LVDS Option ≥ VDD

Note) Pin number starts from Right side

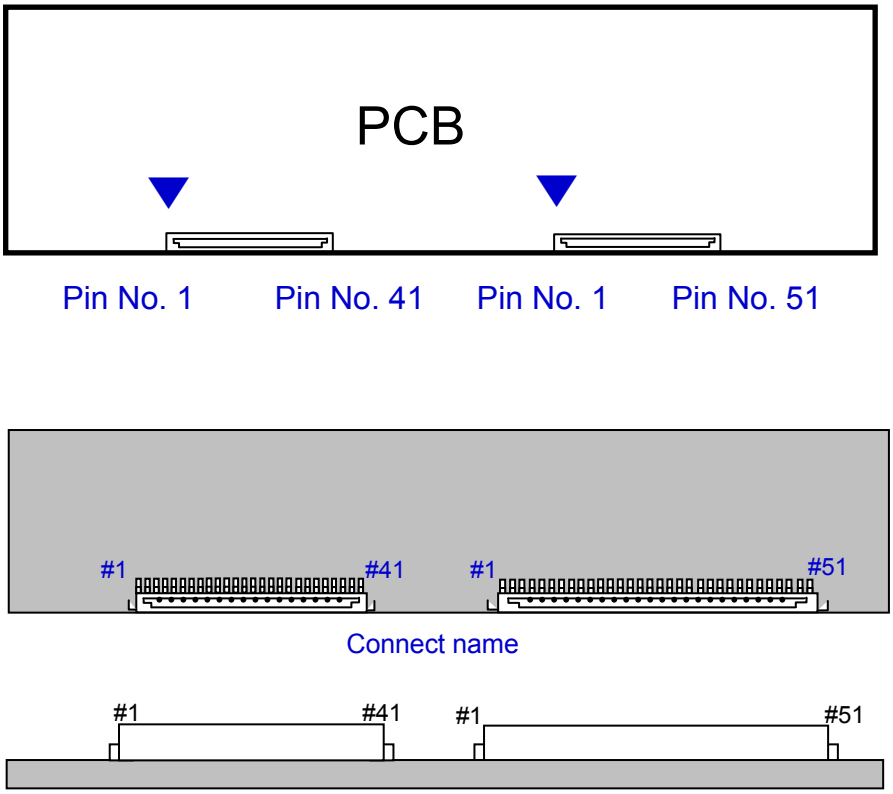

Fig. Connector diagram

a. All GND pins should be connected together and also be connected to the LCD's metal chassis.
b. All power input pins should be connected together.
c. All NC pins should be separated from other signal or power.

4.2. Inverter Input Pin Configuration

Connector : S14B-PHA-SM (JST)

Pin No.	Pin Configuration(FUNCTION)	
	Master (Left)	Slave (Right)
1	24 V	24 V
2	24 V	24 V
3	24 V	24 V
4	24 V	24 V
5	24 V	24 V
6	GND	GND
7	GND	GND
8	GND	GND
9	GND	GND
10	GND	GND
11	Error Out	No Connection
12	Backlight On /Off [ON: 2.4 – 5.5 V, OFF: 0 - 0.8 V]	No Connection
13	Dimming Control [0V:Min, 3.3V:Max]	No Connection
14	No Connection	No Connection

4.3. Inverter Input Power Sequence

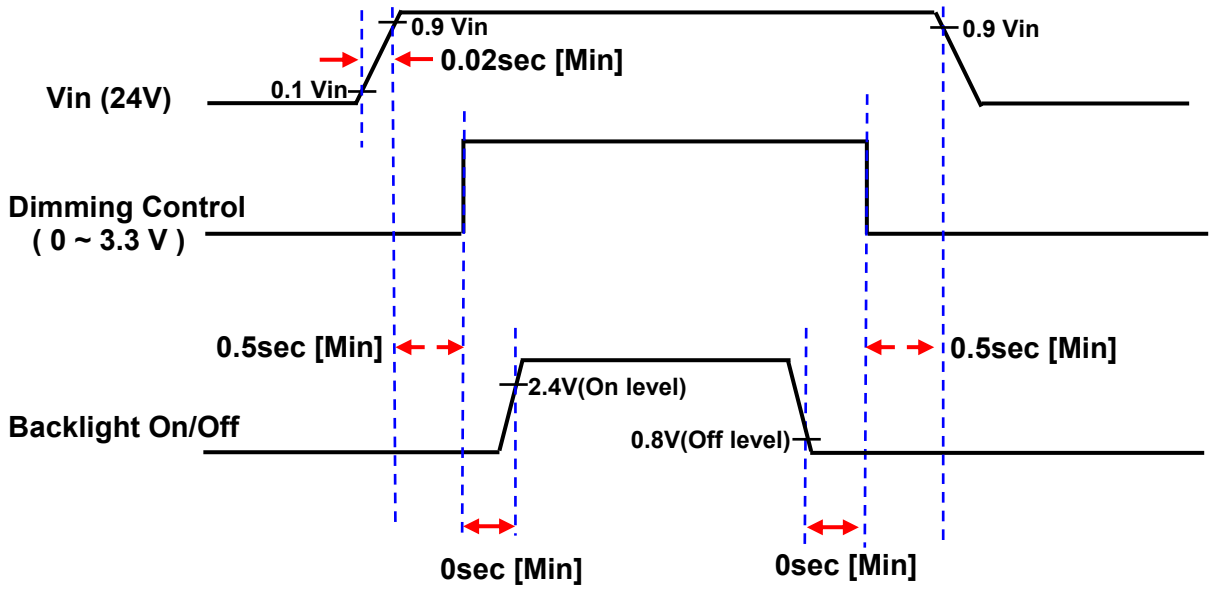

4.4 LVDS Interface

- LVDS Receiver : Tcon (merged)
- Data Format (JEIDA & Normal)

	LVDS pin	JEIDA -DATA	VESA -DATA
TxOUT/RxIN0	TxIN/RxOUT0	R4	R0
	TxIN/RxOUT1	R5	R1
	TxIN/RxOUT2	R6	R2
	TxIN/RxOUT3	R7	R3
	TxIN/RxOUT4	R8	R4
	TxIN/RxOUT6	R9	R5
	TxIN/RxOUT7	G4	G0
TxOUT/RxIN1	TxIN/RxOUT8	G5	G1
	TxIN/RxOUT9	G6	G2
	TxIN/RxOUT12	G7	G3
	TxIN/RxOUT13	G8	G4
	TxIN/RxOUT14	G9	G5
	TxIN/RxOUT15	B4	B0
	TxIN/RxOUT18	B5	B1
TxOUT/RxIN2	TxIN/RxOUT19	B6	B2
	TxIN/RxOUT20	B7	B3
	TxIN/RxOUT21	B8	B4
	TxIN/RxOUT22	B9	B5
	TxIN/RxOUT24	HSYNC	HSYNC
	TxIN/RxOUT25	VSYNC	VSYNC
	TxIN/RxOUT26	DEN	DE
TxOUT/RxIN3	TxIN/RxOUT27	R2	R6
	TxIN/RxOUT5	R3	R7
	TxIN/RxOUT10	G2	G6
	TxIN/RxOUT11	G3	G7
	TxIN/RxOUT16	B2	B6
	TxIN/RxOUT17	B3	B7
	TxIN/RxOUT23	RESERVED	RESERVED
TxOUT/RxIN4	TxIN/RxOUT28	R0	R8
	TxIN/RxOUT29	R1	R9
	TxIN/RxOUT30	G0	G8
	TxIN/RxOUT31	G1	G9
	TxIN/RxOUT32	B0	B8
	TxIN/RxOUT33	B1	B9
	TxIN/RxOUT34	RESERVED	RESERVED

4.5 Input Signals, Basic Display Colors and Gray Scale of Each Color

COLOR	DISPLAY (8bit)	DATA SIGNAL																														GRAY SCALE LEVEL
		RED										GREEN										BLUE										
		R0	R1	R2	R3	R4	R5	R6	R7	R8	R9	G0	G1	G2	G3	G4	G5	G6	G7	G8	G9	B0	B1	B2	B3	B4	B5	B6	B7	B8	B9	
BASIC COLOR	BLACK	0	0	0	0	0	0	0	0	0	0	0	0	0	0	0	0	0	0	0	0	0	0	0	0	0	0	0	0	0	0	-
	BLUE	0	0	0	0	0	0	0	0	0	0	0	0	0	0	0	0	0	0	0	0	1	1	1	1	1	1	1	1	1	1	-
	GREEN	0	0	0	0	0	0	0	0	0	0	1	1	1	1	1	1	1	1	1	1	0	0	0	0	0	0	0	0	0	0	-
	CYAN	0	0	0	0	0	0	0	0	0	0	1	1	1	1	1	1	1	1	1	1	1	1	1	1	1	1	1	1	1	1	-
	RED	1	1	1	1	1	1	1	1	1	1	0	0	0	0	0	0	0	0	0	0	0	0	0	0	0	0	0	0	0	0	-
	MAGENTA	1	1	1	1	1	1	1	1	1	1	0	0	0	0	0	0	0	0	0	0	1	1	1	1	1	1	1	1	1	1	-
	YELLOW	1	1	1	1	1	1	1	1	1	1	1	1	1	1	1	1	1	1	1	1	0	0	0	0	0	0	0	0	0	0	-
	WHITE	1	1	1	1	1	1	1	1	1	1	1	1	1	1	1	1	1	1	1	1	1	1	1	1	1	1	1	1	1	1	-
GRAY SCALE OF RED	BLACK	0	0	0	0	0	0	0	0	0	0	0	0	0	0	0	0	0	0	0	0	0	0	0	0	0	0	0	0	0	0	R0
	DARK ↑	1	0	0	0	0	0	0	0	0	0	0	0	0	0	0	0	0	0	0	0	0	0	0	0	0	0	0	0	0	0	R1
		0	1	0	0	0	0	0	0	0	0	0	0	0	0	0	0	0	0	0	0	0	0	0	0	0	0	0	0	0	0	R2
		:	:	:	:	:	:	:	:	:	:	:	:	:	:	:	:	:	:	:	:	:	:	:	:	:	:	:	:	:	:	R3~ R1020
	↓ LIGHT	:	:	:	:	:	:	:	:	:	:	:	:	:	:	:	:	:	:	:	:	:	:	:	:	:	:	:	:	:	:	
		1	0	1	1	1	1	1	1	1	1	0	0	0	0	0	0	0	0	0	0	0	0	0	0	0	0	0	0	0	0	R1021
		0	1	1	1	1	1	1	1	1	1	0	0	0	0	0	0	0	0	0	0	0	0	0	0	0	0	0	0	0	0	R1022
	RED	1	1	1	1	1	1	1	1	1	1	0	0	0	0	0	0	0	0	0	0	0	0	0	0	0	0	0	0	0	0	R1023
GRAY SCALE OF GREEN	BLACK	0	0	0	0	0	0	0	0	0	0	0	0	0	0	0	0	0	0	0	0	0	0	0	0	0	0	0	0	0	0	G0
	DARK ↑	0	0	0	0	0	0	0	0	0	0	1	0	0	0	0	0	0	0	0	0	0	0	0	0	0	0	0	0	0	0	G1
		0	0	0	0	0	0	0	0	0	0	0	1	0	0	0	0	0	0	0	0	0	0	0	0	0	0	0	0	0	0	G2
		:	:	:	:	:	:	:	:	:	:	:	:	:	:	:	:	:	:	:	:	:	:	:	:	:	:	:	:	:	:	G3~ G1020
	↓ LIGHT	:	:	:	:	:	:	:	:	:	:	:	:	:	:	:	:	:	:	:	:	:	:	:	:	:	:	:	:	:	:	
		0	0	0	0	0	0	0	0	0	0	1	0	1	1	1	1	1	1	1	1	0	0	0	0	0	0	0	0	0	0	G1021
		0	0	0	0	0	0	0	0	0	0	0	1	1	1	1	1	1	1	1	1	0	0	0	0	0	0	0	0	0	0	G1022
	GREEN	0	0	0	0	0	0	0	0	0	0	1	1	1	1	1	1	1	1	1	1	0	0	0	0	0	0	0	0	0	0	G1023
GRAY SCALE OF BLUE	BLACK	0	0	0	0	0	0	0	0	0	0	0	0	0	0	0	0	0	0	0	0	0	0	0	0	0	0	0	0	0	0	B0
	DARK ↑	0	0	0	0	0	0	0	0	0	0	0	0	0	0	0	0	0	0	0	0	1	0	0	0	0	0	0	0	0	0	B1
		0	0	0	0	0	0	0	0	0	0	0	0	0	0	0	0	0	0	0	0	0	1	0	0	0	0	0	0	0	0	B2
		:	:	:	:	:	:	:	:	:	:	:	:	:	:	:	:	:	:	:	:	:	:	:	:	:	:	:	:	:	:	B3~ B1020
	↓ LIGHT	:	:	:	:	:	:	:	:	:	:	:	:	:	:	:	:	:	:	:	:	:	:	:	:	:	:	:	:	:	:	
		0	0	0	0	0	0	0	0	0	0	0	0	0	0	0	0	0	0	0	0	1	0	1	1	1	1	1	1	1	1	B1021
		0	0	0	0	0	0	0	0	0	0	0	0	0	0	0	0	0	0	0	0	0	1	1	1	1	1	1	1	1	1	B1022
	BLUE	0	0	0	0	0	0	0	0	0	0	0	0	0	0	0	0	0	0	0	0	1	1	1	1	1	1	1	1	1	1	B1023

Note) Definition of Gray :

Rn : Red Gray, Gn : Green Gray, Bn : Blue Gray (n = Gray level)

Input Signal : 0 = Low level voltage, 1 = High level voltage

5. Interface Timing

5.1 Timing Parameters (DE only mode)

SIGNAL	ITEM	SYMBOL	MIN.	TYP.	MAX.	Unit	NOTE
Clock	Frequency	$1/T_C$	270	297	207	MHz	-
Hsync		F_H	120	135	140	KHz	-
Vsync		F_V	95	120	130	Hz	-
Vertical Display Term	Active Display Period	T_{VD}	-	1080	-	lines	-
	Vertical Total	T_V	1092	1125	1380	lines	-
Horizontal Display Term	Active Display Period	T_{HD}	-	1920	-	clocks	-
	Horizontal Total	T_H	2090	2200	2350	clocks	-

Note) This product is DE only mode. The input of Hsync & Vsync signal does not have an effect on normal operation.

(1) Test Point : TTL control signal and CLK at LVDS Tx input terminal in system

(2) Internal VDD = 3.3V

5.2 Timing diagrams of interface signal (DE only mode)

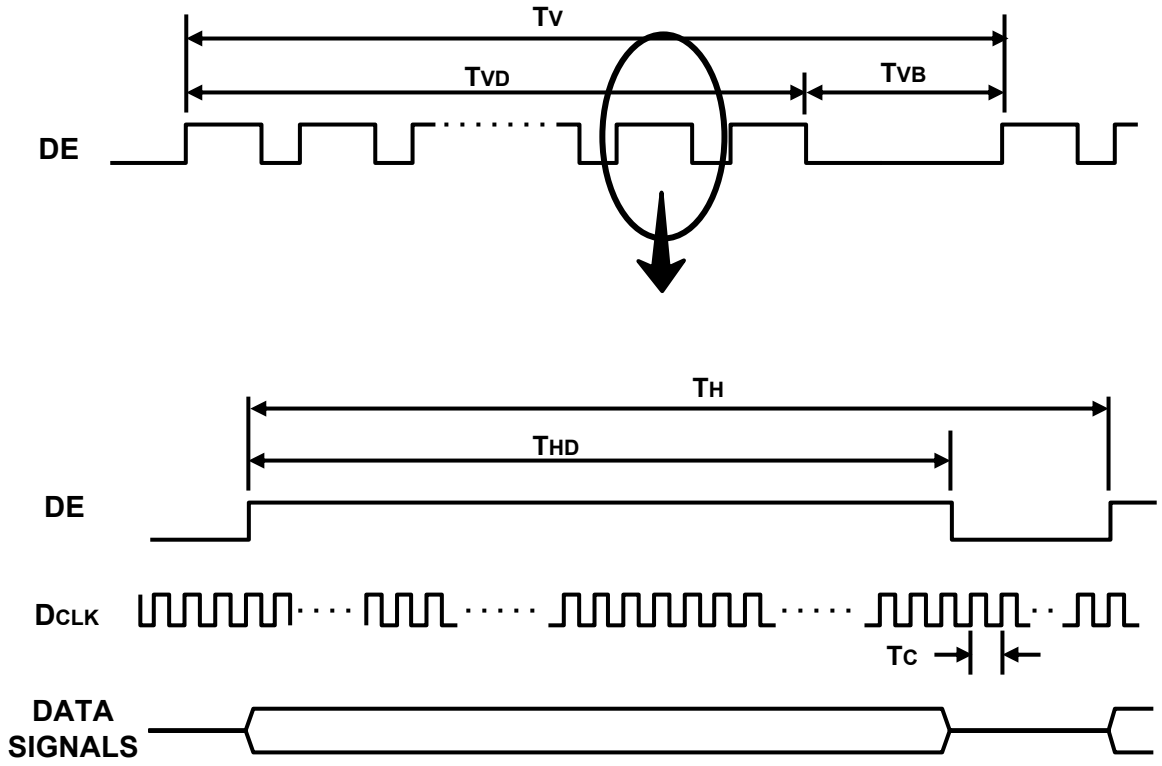

5.3 Power ON/OFF Sequence

To prevent a latch-up or DC operation of the LCD Module, the power on/off sequence should be as the diagram below.

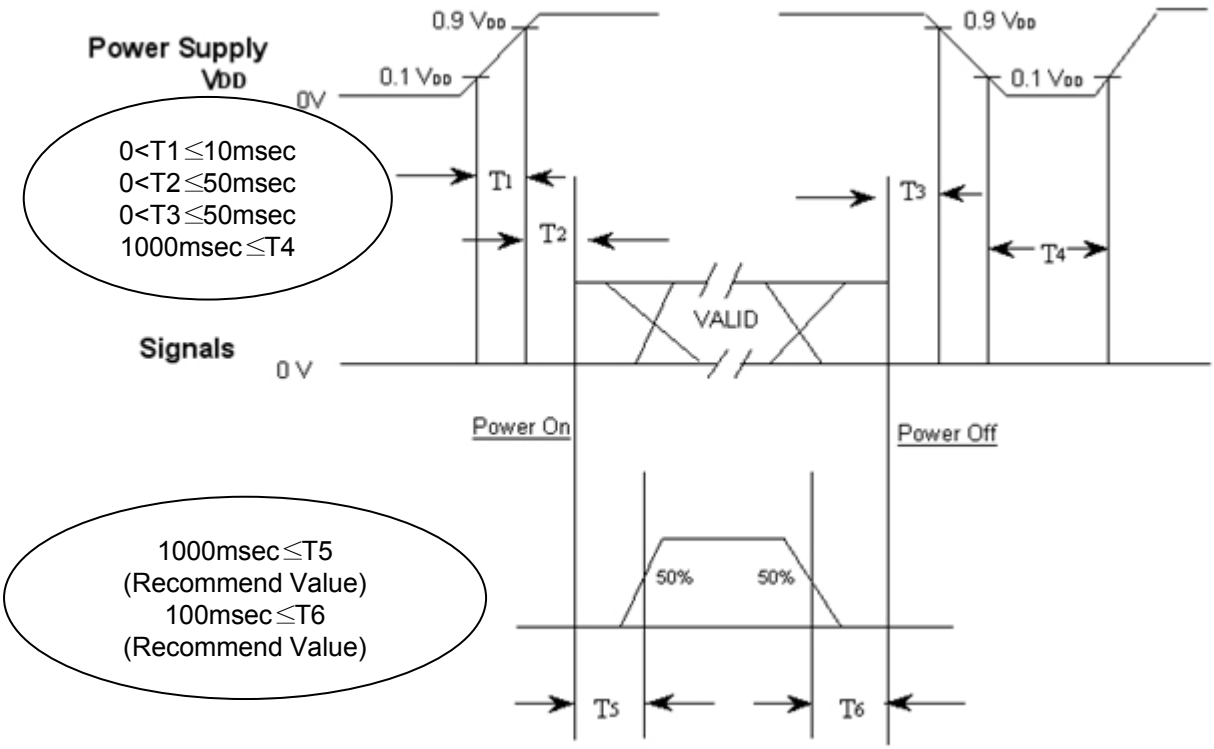

T1 : V_{DD} rising time from 10% to 90%
T2 : The time from V_{DD} to valid data at power ON.
T3 : The time from valid data off to V_{DD} off at power Off.
T4 : V_{DD} off time for Windows restart
T5 : The time from valid data to B/L enable at power ON.
T6 : The time from valid data off to B/L disable at power Off.

- The supply voltage of the external system for the Module input should be the same as the definition of V_{DD}.
- Apply the lamp voltage within the LCD operation range. When the back light turns on before the LCD operation or the LCD turns off before the back light turns off, the display may momentarily show abnormal screen.
- In case of V_{DD} = off level, please keep the level of input signals low or keep a high impedance.
- T4 should be measured after the Module has been fully discharged between power off and on period.
- Interface signal should not be kept at high impedance when the power is on.
- In case T5 is less than 1000msec and T6 is less than 100msec, Garbage Display can be seen.(It is not related to electrical function issue, Just for recommendation to prevent Garbage Display)

6. Outline Dimension (Front View)

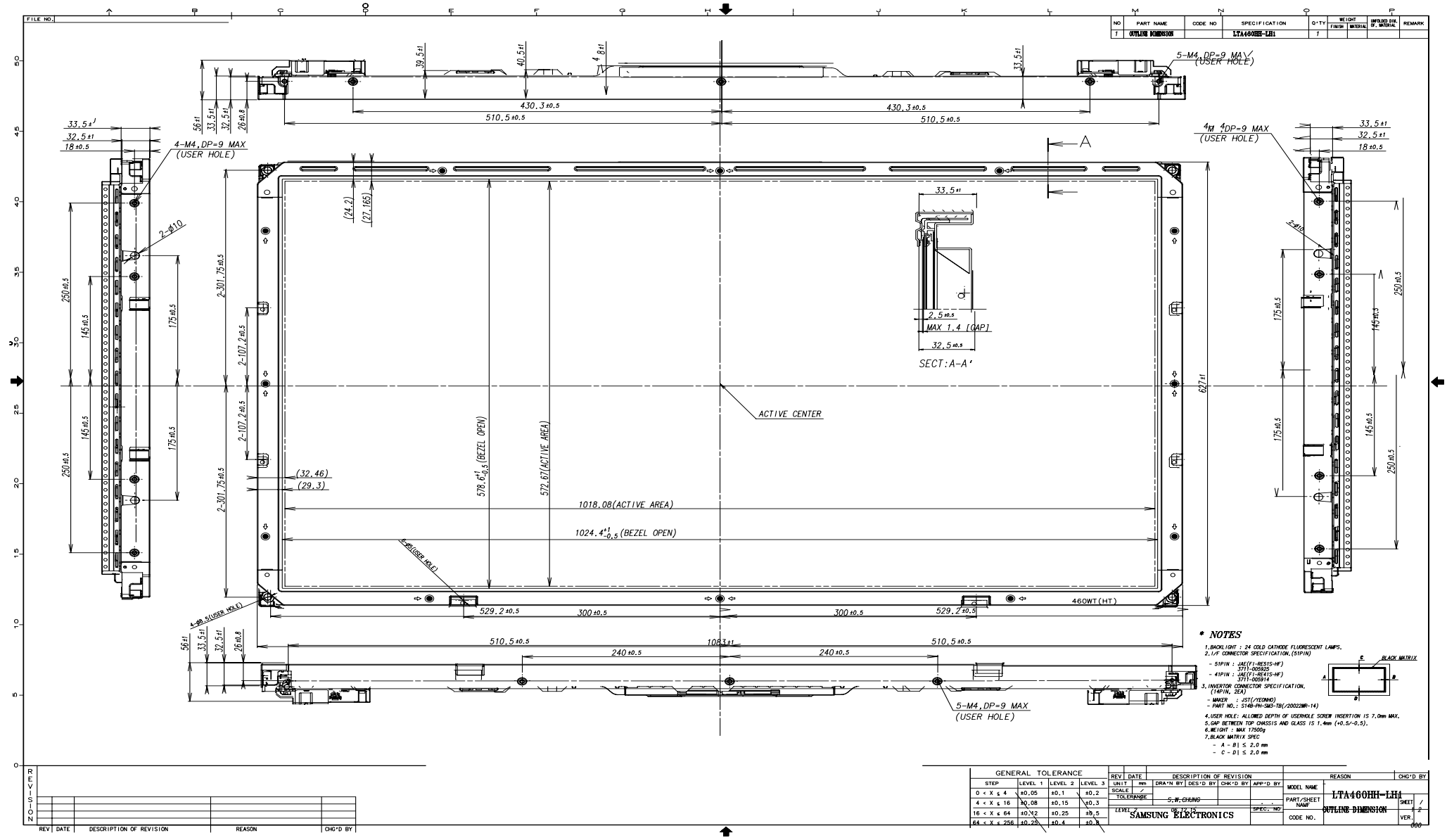

Model	LTA460HH-LH3	Doc. No	06-000-G-071016	Page	22 / 28

6. Outline Dimension (Rear View)

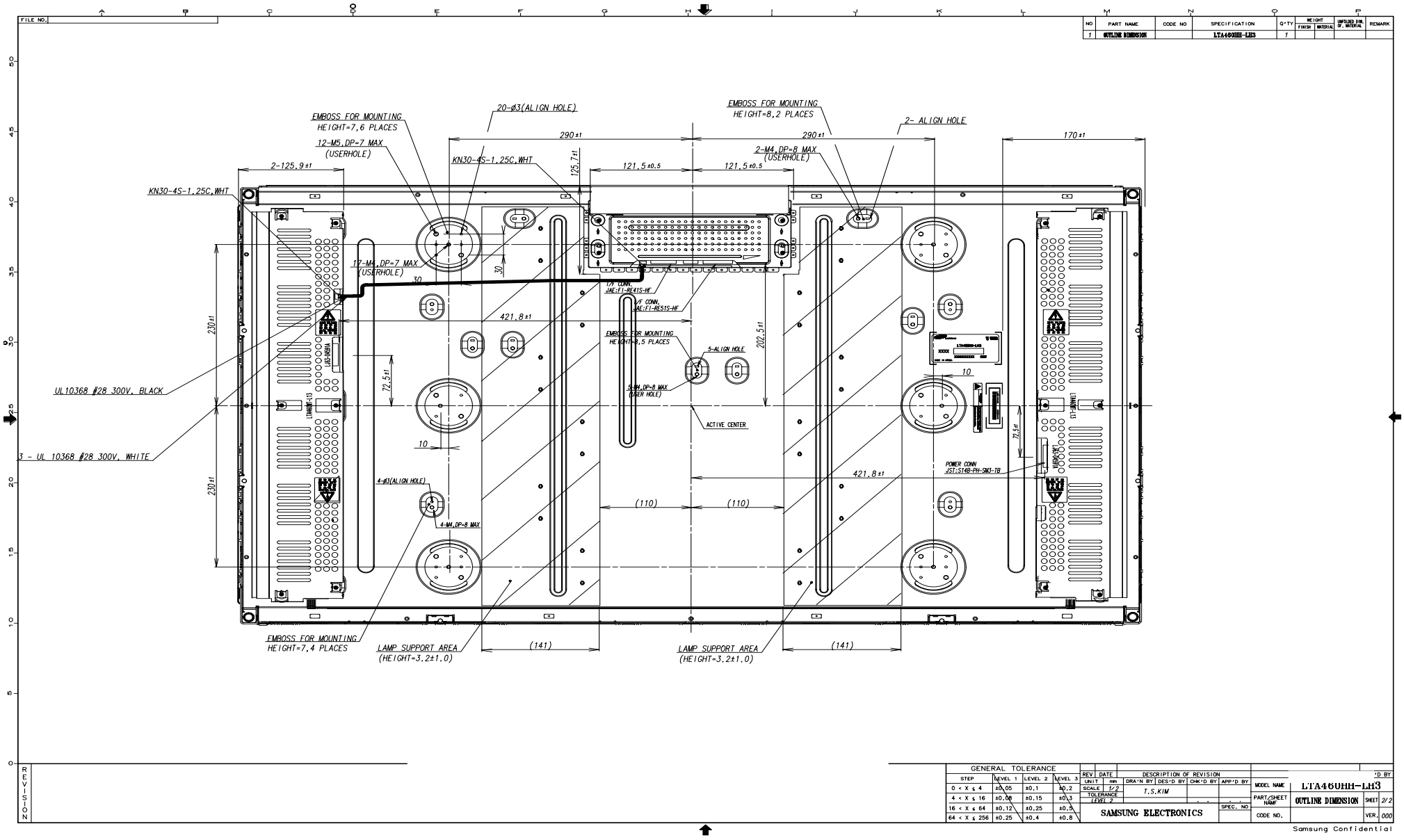

NO	PART NAME	CODE NO	SPECIFICATION	Q'TY	WEIGHT FINISH	WEIGHT MATERIAL	UNFOLDED DIM. OF MATERIAL	REMARK
1	OUTLINE DIMENSION		LTA460HH-LH3	1				

GENERAL TOLERANCE			
STEP	LEVEL 1	LEVEL 2	LEVEL 3
0 < X ≤ 4	±0.05	±0.1	±0.2
4 < X ≤ 16	±0.08	±0.15	±0.3
16 < X ≤ 64	±0.12	±0.25	±0.5
64 < X ≤ 256	±0.25	±0.4	±0.8

REV	DATE	DESCRIPTION OF REVISION	D BY

UNIT	mm	DRA'N BY	DES'D BY	CHK'D BY	APP'D BY
SCALE	1/2	T.S.KIM			
TOLERANCE LEVEL 2					
SPEC. NO					

SAMSUNG ELECTRONICS

MODEL NAME	LTA460HH-LH3
PART/SHEET NAME	OUTLINE DIMENSION
CODE NO.	
SHEET	2/2
VER.	000

Samsung Confidential

7. PACKING

7.1 CARTON (Internal Package)

(1) Packing Form

Corrugated fiberboard box and corrugated cardboard as shock absorber

(2) Packing Method

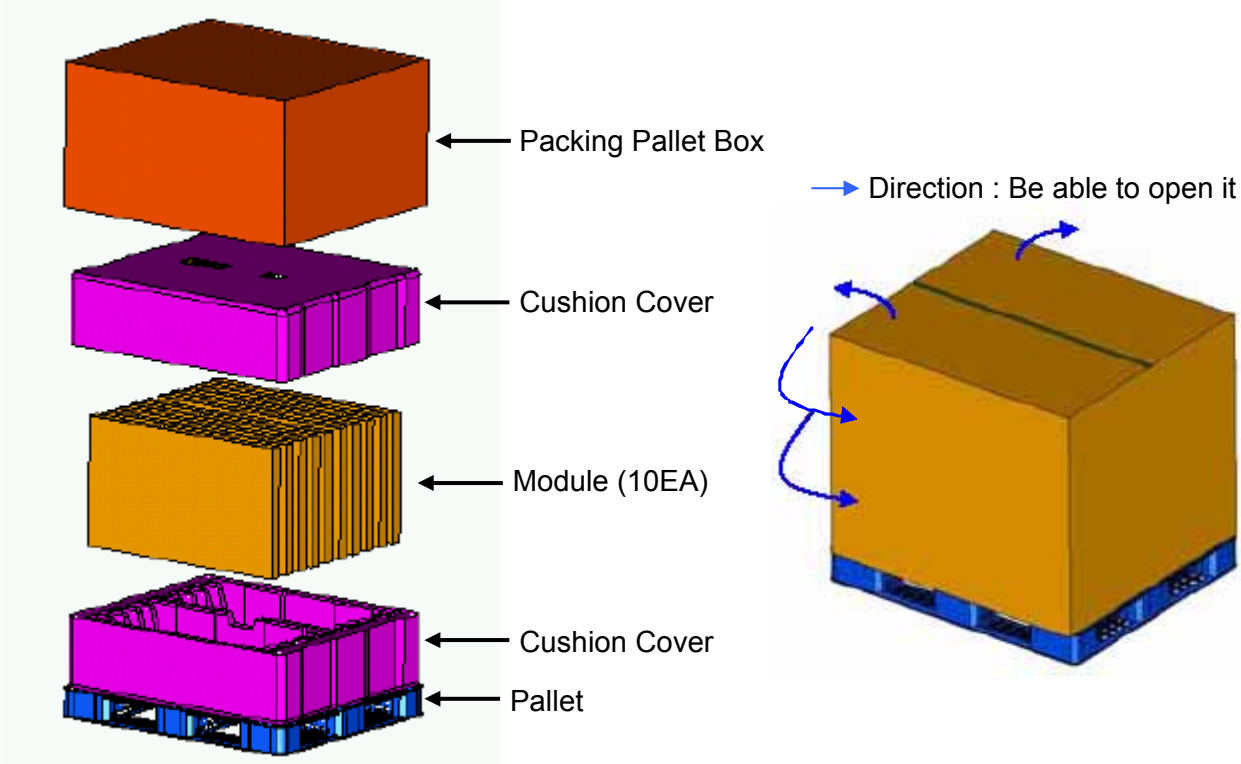

7.2 Packing Specification

Item	Specification	Remark
LCD Packing	10ea / (Packing-Pallet Box)	1. 170Kg / LCD (10ea) 2. 10 Kg / Cushion-pallet (2ea) 3. 8 Kg / Packing-Pallet Box (1ea) 4. Cushion-pallet Material : EPS 5. Packing-Pallet Box Material : DW4
Pallet	1Box / Pallet	1. Pallet weight = 8.8kg
Packing Direction	Vertical	
Total Pallet Size	H x V x height	1270mm(H) x 1150mm(V) x 844mm(height)
Total Pallet Weight	196.8kg	Pallet(8.8kg) + Module(17x10=170) + Cushion (up+bottom=10kg) + Pallet-BOX(8kg)

8. MARKING & OTHERS

A nameplate bearing followed by is affixed to a shipped product at the specified location on each product.

(1) Parts number : LTA460HH-LH3
(2) Revision: Three letters
(3) Lot number : X X X X XXX XX X

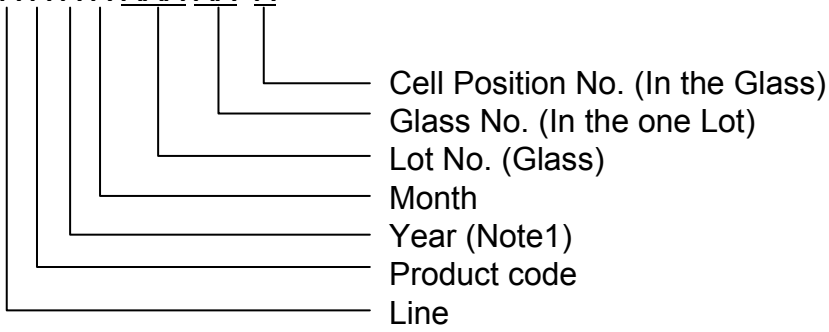

(4) Nameplate Indication

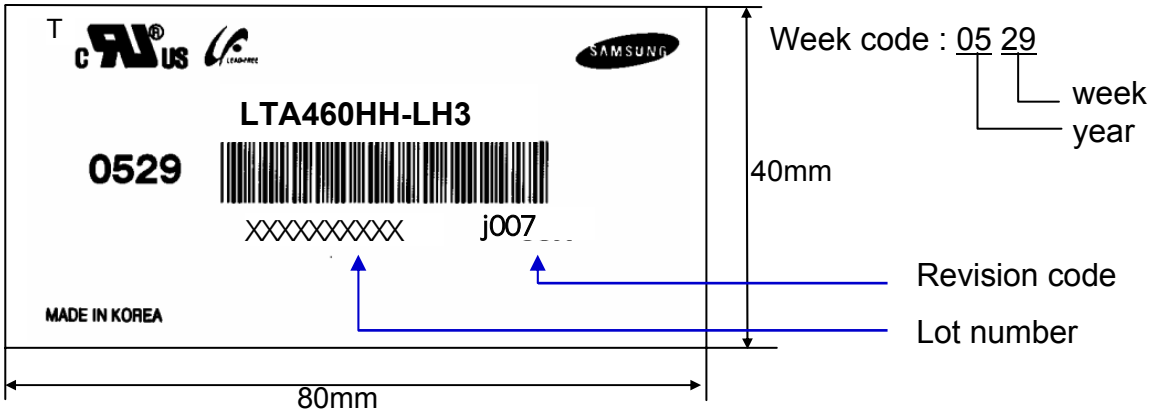

(5) Packing box attach

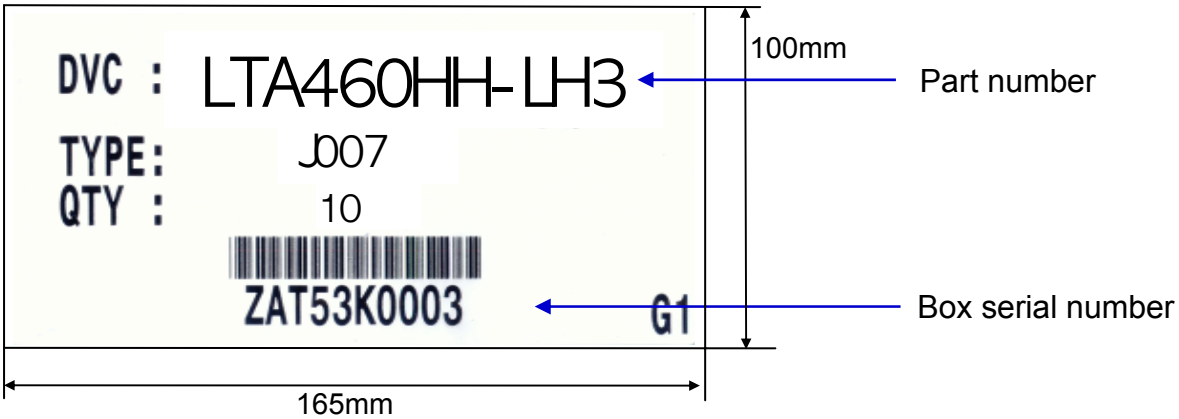

(6) Others

1. After service part
   Lamps cannot be replaced because of the narrow bezel structure.

9. General Precautions

9.1 Handling

(a) When the Module is assembled, it should be attached to the system firmly using all mounting holes. Be careful not to twist and bend the Module.

(b) Because the inverter use high voltage, it should be disconnected from power before it is assembled or disassembled.

(c) Refrain from strong mechanical shock and / or any force to the Module. In addition to damage, this may cause improper operation or damage to the Module and CCFT back light.

(d) Note that polarizers are very fragile and could be damage easily. Do not press or scratch the surface harder than a HB pencil lead.

(e) Wipe off water droplets or oil immediately. If you leave the droplets for a long time, staining or discoloration may occur.

(f) If the surface of the polarizer is dirty, clean it using absorbent cotton or soft cloth.

(g) Desirable cleaners are water, IPA(Isopropyl Alcohol) or Hexane. Do not use Ketone type materials(ex. Acetone), Ethyl alcohol, Toluene, Ethyl acid or Methyl chloride. It might permanent damage to the polarizer due to chemical reaction.

(h) If the liquid crystal material leaks from the panel, it should be kept away from the eyes or mouth . In case of contact with hands, legs or clothes, it must be washed away with soap thoroughly.

(i) Protect the Module from static, or the CMOS Gate Array IC would be damaged.

(j) Use finger-stalls with soft gloves in order to keep display clean during the incoming inspection and assembly process.

(k) Do not disassemble the Module.

(l) Do not pull or fold the lamp wire.

(m) Do not adjust the variable resistor located on the Module.

(n) Protection film for polarizer on the Module should be slowly peeled off just before use so that the electrostatic charge can be minimized.

(o) Pins of I/F connector should not be touched directly with bare hands.

9.2 Storage

(a) Do not leave the Module in high temperature, and high humidity for a long time. It is highly recommended to store the Module with temperature from 0 to 35℃ and relative humidity of less than 70%.

(b) Do not store the TFT-LCD Module in direct sunlight.

(c) The Module should be stored in a dark place. It is prohibited to apply sunlight or fluorescent light in storing.

9.3 Operation

(a) No Connection or disconnect the Module in the "Power On" condition.

(b) Power supply should always be turned on/off by the "Power on/off sequence"

(c) Module has high frequency circuits. Sufficient suppression to the electromagnetic interference should be done by system manufacturers. Grounding and shielding methods may be important to minimize the interference.

(d) The cable between the back light connector and its inverter power supply should be connected directly with a minimized length. A longer cable between the back light and the inverter may cause lower luminance of lamp(CCFT) and may require higher startup voltage(Vs).

9.4 Operation Condition Guide

(a) The LCD product should be operated under normal conditions.
Normal condition is defined as below;
- Temperature : 20±15℃
- Humidity : 55±20%
- Display pattern : continually changing pattern (Not stationary)

(b) If the product will be used in extreme conditions such as high temperature, humidity, display patterns or operation time etc.., It is strongly recommended to contact SEC for Application engineering advice. Otherwise, its reliability and function may not be guaranteed. Extreme conditions are commonly found at Airports, Transit Stations, Banks, Stock market, and Controlling systems.

9.5 Others

(a) Ultra-violet ray filter is necessary for outdoor operation.

(b) Avoid condensation of water. It may result in improper operation or disconnection of electrode.

(c) Do not exceed the absolute maximum rating value. (supply voltage variation, input voltage variation, variation in part contents and environmental temperature, and so on)
Otherwise the Module may be damaged.

(d) If the Module keeps displaying the same pattern for a long period of time, the image may be "sticked" to the screen.
To avoid image sticking, it is recommended to use a screen saver.

(e) This Module has its circuitry PCB's on the rear side and should be handled carefully in order not to be stressed.

(f) Please contact SEC in advance when you display the same pattern for a long time.