Samsung Confidential

Product Information

DATE : 09.Oct.2009

SAMSUNG TFT-LCD

MODEL : **LTI460HA02**

The Information Described in this Specification is Preliminary and can be changed without prior notice

APPROVED BY	DATE	PREPARED BY	DATE
Je-Hwan Oh	09.Oct.2009	**Yu-Geun Lee**	09.Oct.2009

Application Engineering Part 3, LCD Division

Samsung Electronics Co . , LTD.

Contents

Revision History ---------- (3)

General Description ---------- (4)

General Information ---------- (4)

1. Absolute Maximum Ratings ---------- (5)

2. Application information for DID (Digital Information Display) ---------- (6)

3. Optical Characteristics ---------- (7)

4. Electrical Characteristics ---------- (10)
   4.1 TFT LCD Module
   4.2 Back Light Unit
   4.3 Inverter Input & Specification

5. Input Terminal Pin Assignment ---------- (13)
   5.1 LVDS Connector
   5.2 Inverter Input Pin Configuration
   5.3 Inverter Input Power Sequence
   5.4 LVDS Interface
   5.5 Input Signals, Basic Display Colors and Gray Scale of Each Color

6. Interface Timing ---------- (18)
   6.1 Timing Parameters (DE only mode)
   6.2 Timing Diagrams of interface Signal (DE only mode)
   6.3 Power ON/OFF Sequence

7. Outline Dimension ---------- (21)

8. Packing ---------- (23)

9. Marking & Others ---------- (24)

10. General Precaution ---------- (25)
   10.1 Handling
   10.2 Storage
   10.3 Operation
   10.4 Operation Condition Guide
   10.5 Others

* Revision History

Date	Rev. No	Page	Summary	
Jan 30, 2009	000	all	First issued	
Apr 03, 2009	001	21, 22	Mechanical drawing change	
Jun 05, 2009	002	21, 22	Mechanical drawing change	
Oct 09, 2009	003	4	Weight Max : 18,000g → 16,000g	
		7	Contrast Ratio Typ : 4000 → 3500	
		10	Current of Power Supply	Black Typ : 450mA → 600mA White Typ : 550mA → 1100mA N-Pattern Typ : 700mA → 1200mA N-Pattern Max : 1000mA → 1300mA
		11	Lamp Current Min : 8mA → 5mA Lamp Voltage Range : 1095Vrms ~ 1185Vrms → 1070Vrms ~ 1260Vrms	
		23	Total Pallet Weight : 196.8kg → 171.8kg	

General Description

Description

LTI460HA02 is a color active matrix liquid crystal display (LCD) that uses amorphous silicon TFT(Thin Film Transistor) as switching components. This model is composed of a TFT LCD panel, a driver circuit and a backlight unit. The resolution of a 46.0“ is 1920 x 1080 and this model can display up to 16.7 million colors with wide viewing angle of 89° or higher in all directions. This panel is intended to support applications to provide a excellent performance for Flat Panel Display such as Home-alone Multimedia TFT-LCD TV, Display terminals for AV application products, and Digital Information Display (DID).

Features

- RoHS compliance (Pb-free)
- High contrast ratio, High luminance
- SPVA(Super Patterned Vertical Align) mode
- Wide viewing angle (±178°)
- High speed response
- Narrow bezel
- Landscape / Portrait type compatible
- Wide UXGA (1920 x 1080 pixels) resolution (16:9)
- Low power consumption
- Direct Type 16 CCFTs(Cold Cathode Fluorescent Tube)
- DE(Data Enable) mode
- LVDS (Low Voltage Differential Signaling) interface (2pixel/clock)

General Information

Items	Specification	Unit	Note
Module Size	1047.4(W_{TYP}) x 600.6(H_{TYP})	mm	±1.0mm
	66.0(D_{MAX})		
Weight	16,000(Max.)	g	
Pixel Pitch	0.53025(H) x 0.53025(V)	mm	
Active Display Area	1018.08(H) x 572.67(V)	mm	
Surface Treatment	Haze 44% , Hard-coating (3H)		
Display Colors	8 bit - 16.7M	colors	
Number of Pixels	1920 x 1080	pixel	
Pixel Arrangement	RGB vertical stripe		
Display Mode	Normally Black		
Luminance of White	700 (Typ.)	cd/m^2	

1. Absolute Maximum Ratings

If the condition exceeds maximum ratings, it can cause malfunction or unrecoverable damage to the device.

Item		Symbol		Min.	Max.	Unit	Note
Power Supply Voltage		V_{DD}		GND-0.5	13.2	V	(1)
Storage temperature		T_{STG}		-20	60	℃	(2)
Glass surface temperature (Operation)	Center	T_{CENTER}		0	50	℃	(2),(5)
	T. Uniformity	△T		-	10	℃	
Shock (non - operating)		S_{nop}	x,y	-	40	G	(3)
			z	-	30		
Vibration (non - operating)		V_{nop}		-	1.5	G	(4)

Note (1) Ta= 25 ± 2 °C
(2) Temperature and relative humidity range are shown in the figure below.
a. 90 % RH Max. (Ta ≤ 39 °C)
b. Relative Humidity is 90% or less. (Ta > 39 °C)
c. No condensation
(3) 11ms, sine wave, one time for ±X, ±Y, ±Z axis
(4) 10-300 Hz, Sweep rate 10min, 30min for X,Y,Z axis

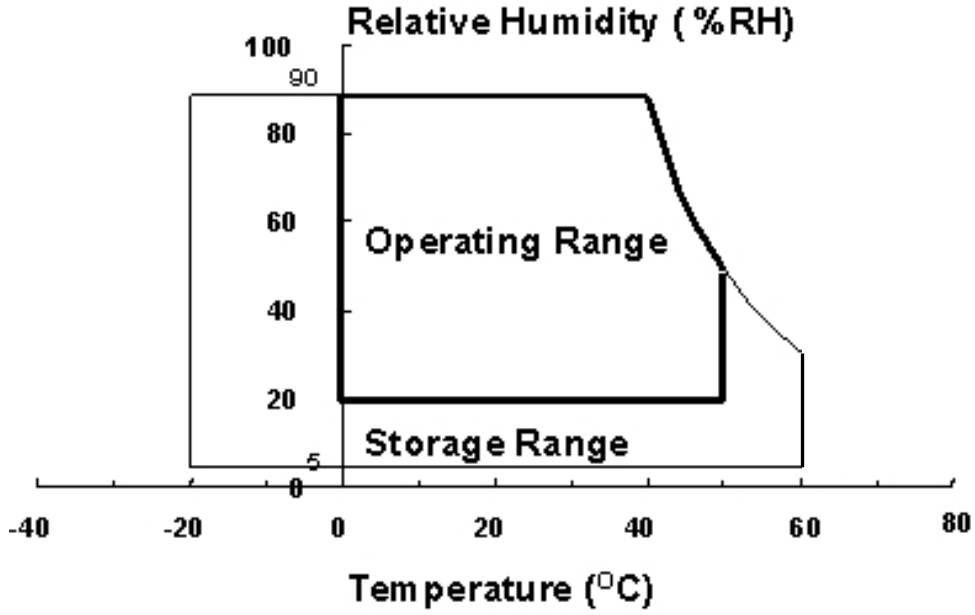

Fig. Temperature and Relative humidity range

(5) Definition of test point

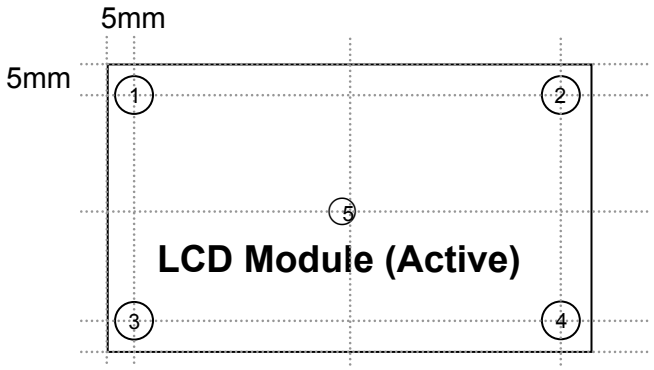

△T should be less than 10℃ (△T = $|T_{CENTER} - T_{CORNER}|$)

T_{CENTER} : Temperature of the center of the glass surface (Test point 5)
T_{CORNER} : Temperature of each edge of the glass surface (Test point 1~4)

2. Application information for DID (Digital Information Display)

A long-term display like DID application may cause uneven display including image retention.
To optimize module's lifetime and function, several operating usages are required.

1. Normal operating condition
 - Temperature: 20 ± 15℃
 - Humidity: 55 ± 20 %
 - Display pattern: moving picture or regular switchover display
Note) Long-term static information image may cause uneven display.

2. Operating usages under abnormal operating condition. Note (1)
 a. Ambient condition
 - Well-ventilated place is recommended to set up DID system.
 b. Power off and screen saver
 - Periodical power-off or screen saver is needed after long-term static display. Note (2)

3. Operating usages to protect uneven display due to long-term static information display
 a. Suitable operating time for P-DID : under 20 hours a day.
 b. Periodical display contents change from static image to moving picture.
 - Liquid crystal refresh time is required.
 c. Periodical background color and character (image) color change
 - Use different colors for background and character (image), respectively.
 - Change colors periodically.
 d. Avoid combination of background and character with large different luminance.

Note (1) Abnormal condition means every operating condition except normal operating condition.
Note (2) Moving picture or black pattern is strongly recommended for screen saver.

4. Lifetime in this spec is guaranteed only when DID is used under right operating usages.

3. Optical Characteristics

The optical characteristics should be measured in a dark room or equivalent.
Measuring equipment : TOPCON BM-7,SPECTRORADIOMETER SR-3

(Ta = 25 ±2°C, V_{DD} = 12V, f_V = 60Hz, f_{DCLK} = 148.5MHz, I_L = 10.5mArms)

Item		Symbol	Condition	Min.	Typ.	Max.	Unit	Note
Contrast Ratio (Center of screen)		C/R	Normal θL,R=0 θU,D=0 Viewing Angle	3000	3500	-		(3) SR-3
Response Time	Rising	Tr		-	10	18	msec	(5) BM-7
	Falling	Tf		-	6	10		
	G-to-G	Tg		-	8	-		
Luminance of White (Center of screen)		Y_L		550	700	-	cd/m²	(6) SR-3
Color Chromaticity (CIE 1931)	Red	Rx		TYP. -0.03	0.640	TYP. +0.03		(7),(8) SR-3
		Ry			0.335			
	Green	Gx			0.283			
		Gy			0.605			
	Blue	Bx			0.145			
		By			0.059			
	White	Wx			0.280			
		Wy			0.290			
Color Gamut		-		-	72	-	%	(7) SR-3
Color Temperature		-		-	10,000	-	K	(7) SR-3
Viewing Angle	Hor.	θ_L	C/R≥10	75	89	-	Degree	(8) SR-3
		θ_R		75	89	-		
	Ver.	θ_U		75	89	-		
		θ_D		75	89	-		
Brightness Uniformity (9 Points)		B_{uni}		-	-	25	%	(4) SR-3

Note (1) Test Equipment Setup

The measurement should be executed in a stable, windless and dark room between 40min and 60min after lighting the backlight at the given temperature for stabilization of the backlight. This should be measured in the center of screen.

Single lamp current : 10.5mA
Environment condition : Ta = 25 ±2 °C

Photo detector	Field
SR-3	1°
BM-7	2°

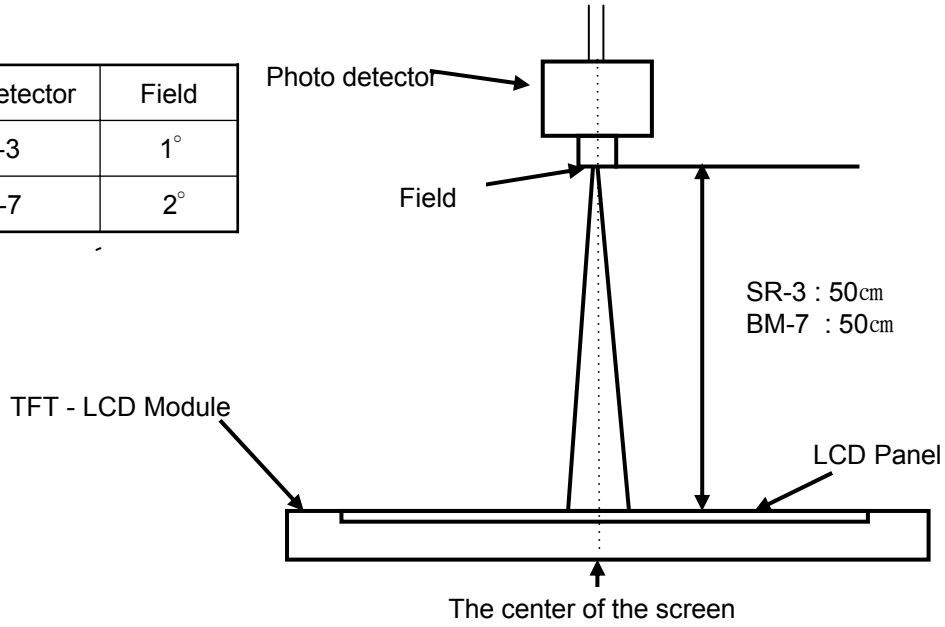

Note (2) Definition of test point

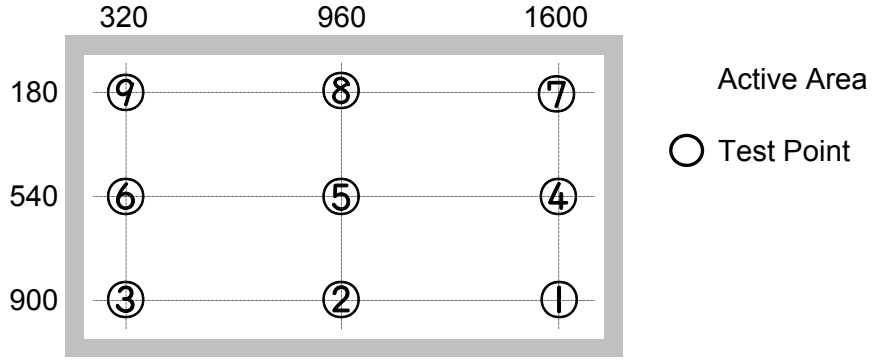

Note (3) Definition of Contrast Ratio (C/R)

: Ratio of gray max (Gmax) & gray min (Gmin) at the center point ⑤ of the panel

$$C/R = \frac{G\max}{G\min}$$

Gmax : Luminance with all pixels white

Gmin : Luminance with all pixels black

Note (4) Definition of 9 points brightness uniformity

$$Buni = 100 * \frac{(B\max - B\min)}{B\max}$$

Bmax : Maximum brightness
Bmin : Minimum brightness

Note (5) Definition of Response time : Sum of Tr, Tf

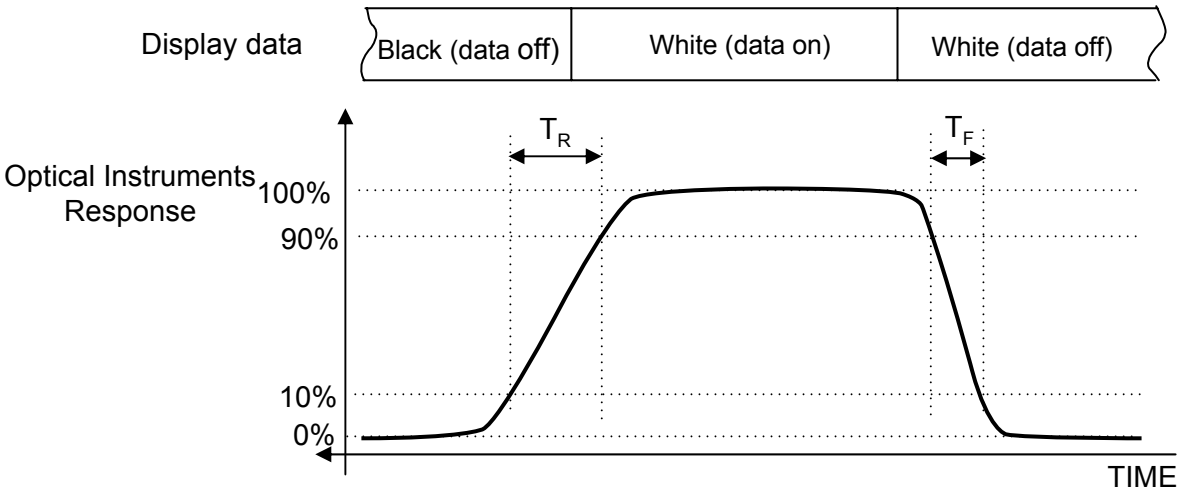

Note (6) Definition of Luminance of White : Luminance of white at center point ⑤

Note (7) Definition of Color Chromaticity (CIE 1931)
Color coordinate of Red, Green, Blue & White at center point ⑤

Note (8) Definition of Viewing Angle
: Viewing angle range (C/R ≥ 10)

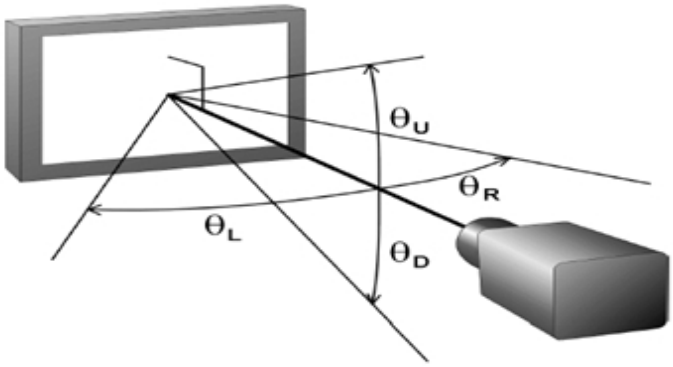

4. Electrical Characteristics

4.1 TFT LCD Module

The connector for display data & timing signal should be connected.

Ta = 25°C ± 2 °C

Item		Symbol	Min.	Typ.	Max.	Unit	Note
Voltage of Power Supply		V_{DD}	10.8	12.0	13.2	V	(1)
Current of Power Supply	(a) Black	I_{DD}	-	600	-	mA	(2),(3)
	(b) White		-	1100	-	mA	
	(c) N-Pattern		-	1200	1300	mA	
Vsync Frequency		f_V	-	60	-	Hz	
Hsync Frequency		f_H	65.0	67.5	70.0	kHz	
Main Frequency		f_{DCLK}	130.0	148.5	155.0	MHz	
Rush Current		I_{RUSH}	-	-	6	A	(4)

Note (1) The ripple voltage should be controlled under 10% of V_{DD}.
(2) f_V = 60Hz, f_{DCLK} = 148.5MHz, V_{DD} = 12.0V, DC Current.
(3) Power dissipation check pattern (LCD Module only)

a) Black Pattern b) White Pattern c) N-Pattern

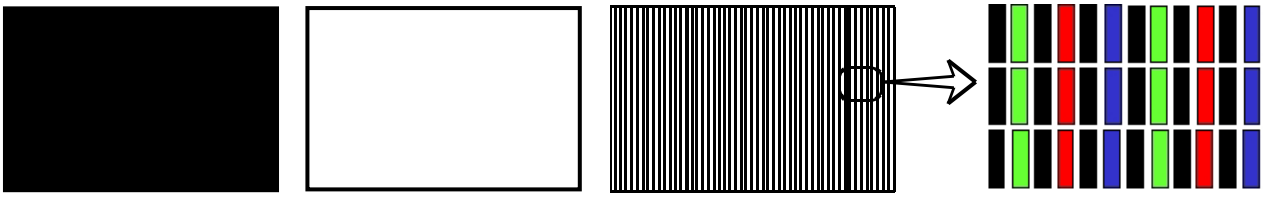

(4) Measurement Conditions

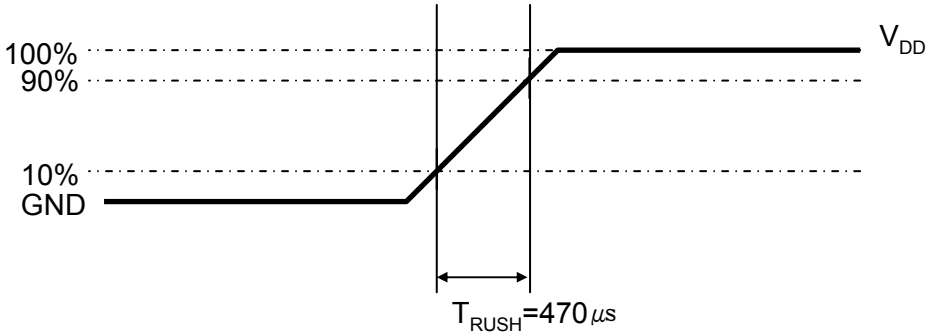

Rush Current I_{RUSH} can be measured when T_{RUSH}. is 470㎲.

4.2 Back Light Unit

The backlight unit contains 16 direct-lighting type CCFTs (Cold Cathode Fluorescent Tube). The characteristics of lamps are shown in the following tables.

Ta=25 ± 2°C

Item	Symbol	Min.	Typ.	Max.	Unit	Note
Lamp Current	I_L	5.0	10.0	12.0	mArms	
Lamp Voltage	V_L	1070	1120	1260	Vrms	
Operating Life Time	Hr	50,000	-	-	Hour	(1)

Note (1) It is defined as the time to take until the brightness reduces to 50% of its original value.

[Operating condition : Ta = 25±2℃ , IL = 10.0mArms, For single lamp only]

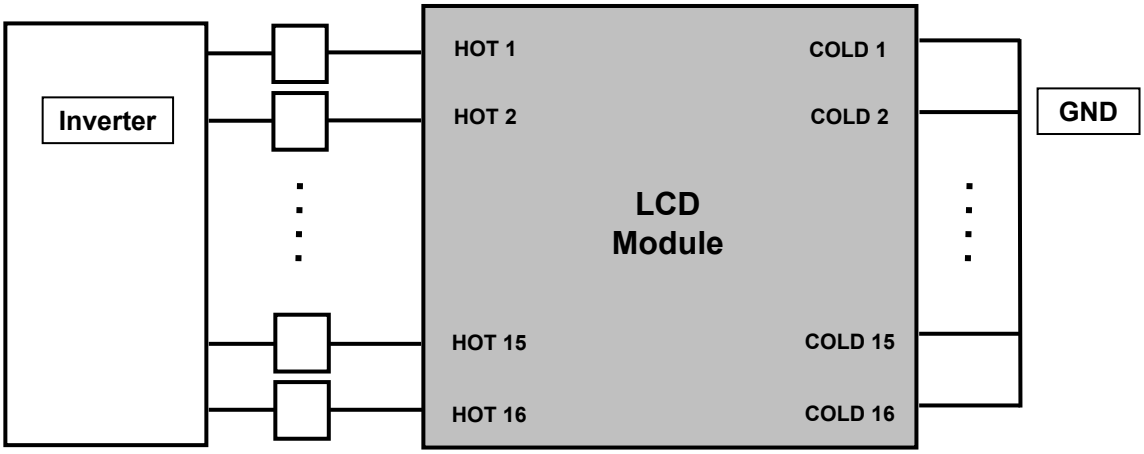

4.3 Inverter Input Condition & Specification

Items	Symbol	Conditions	Specifications			Unit	Note
			Min.	Typ.	Max.		
Input Voltage	Vin	-	21.6	24.0	26.4	V	Ta=25±2°C
Input Current	Iin	Vin=24.0V Vdim=3.3V	-	-	8.25	A	After 1 hour Warm-up
Lamp Current	$I_{O,MAX}$	Vdim=3.3V	10.0	10.5	11.0	mArms	
Frequency	F_{LAMP}	Vin=24.0V Vdim=3.3V	31.0	32.5	34.0	kHz	
Backlight On/Off	ON	Vin=24.0V	2.4	-	5.5	V	-
	OFF		0	-	0.8		
Dimming Control	V_{DIM}	Max Lum	3.3	-	-	V	-
		Min. Lum	-	-	0		

Note (1) Power Consumption is measured at 700[cd/m2] of luminance condition which is the typical luminance value. Lamp Current is measured at the point before Lamp.

5. Input Terminal Pin Assignment

5.1 Input Signal & Power

Connector : FI-RE51S-HF (JAE)

PIN No.	Description		PIN No.	Description	
1	Vdd (12V)		26	Even LVDS Signal	RE[0]P
2	Vdd (12V)		27		RE[1]N
3	Vdd (12V)		28		RE[1]P
4	Vdd (12V)		29		RE[2]N
5	Vdd (12V)		30		RE[2]P
6	No Connection		31		GND
7	GND		32		RECLK-
8	GND		33		RECLK+
9	GND		34		GND
10	Odd LVDS Signal	RO[0]N	35		RE[3]N
11		RO[0]P	36		RE[3]P
12		RO[1]N	37	No Connection	
13		RO[1]P	38	No Connection	
14		RO[2]N	39	GND	
15		RO[2]P	40	No Connection	
16		GND	41	No Connection	
17		ROCLK-	42	No Connection	
18		ROCLK+	43	No Connection	
19		GND	44	No Connection	
20		RO[3]N	45	LVDS Option	
21		RO[3]P	46	No Connection	
22	No Connection		47	No Connection	
23	No Connection		48	No Connection	
24	GND		49	No Connection	
25	Even LVDS	RE[0]N	50	No Connection	
			51	No Connection	

Note(1) No Connection :These pins are only used for SAMSUNG internal purpose.
(2) LVDS Option : High (3.3V) → Normal LVDS format
: Low (GND) or Open (N.C) → JEIDA LVDS format
Sequence :On = V_{DD} ≥ LVDS Option ≥ Interface Signal
Off = Interface Signal ≥ LVDS Option ≥ V_{DD}

Note (3) LVDS Connector

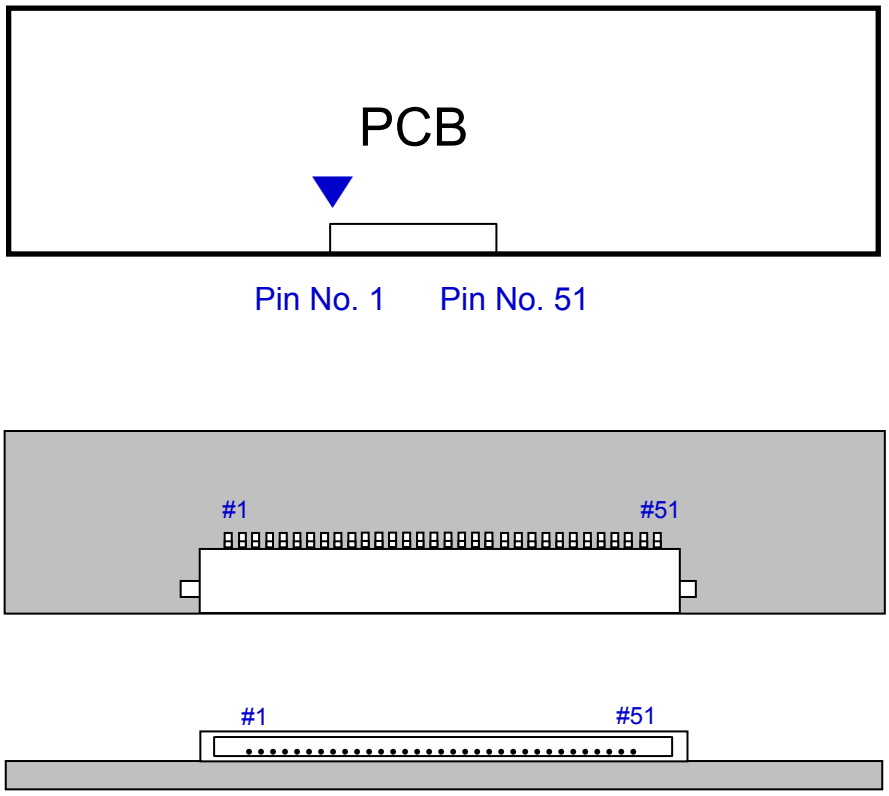

Fig. Connector diagram

a. All GND pins should be connected together and also be connected to the LCD's metal chassis.
b. All power input pins should be connected together.
c. All N.C pins should be separated from other signal or power.

5.2 Inverter Input Pin Configuration

Connector : YEON HO, 20022WR-14B1

Pin No.	Pin Configuration(FUNCTION)
1	Vin (24V)
2	Vin (24V)
3	Vin (24V)
4	Vin (24V)
5	Vin (24V)
6	GND
7	GND
8	GND
9	GND
10	GND
11	No Connection
12	Backlight On /Off [On: 2.4 ~ 5.5V, Off: 0 ~ 0.8V]
13	Dimming Control [0V: Min, 3.3V: Max]
14	No Connection

5.3 Inverter Input Power Sequence

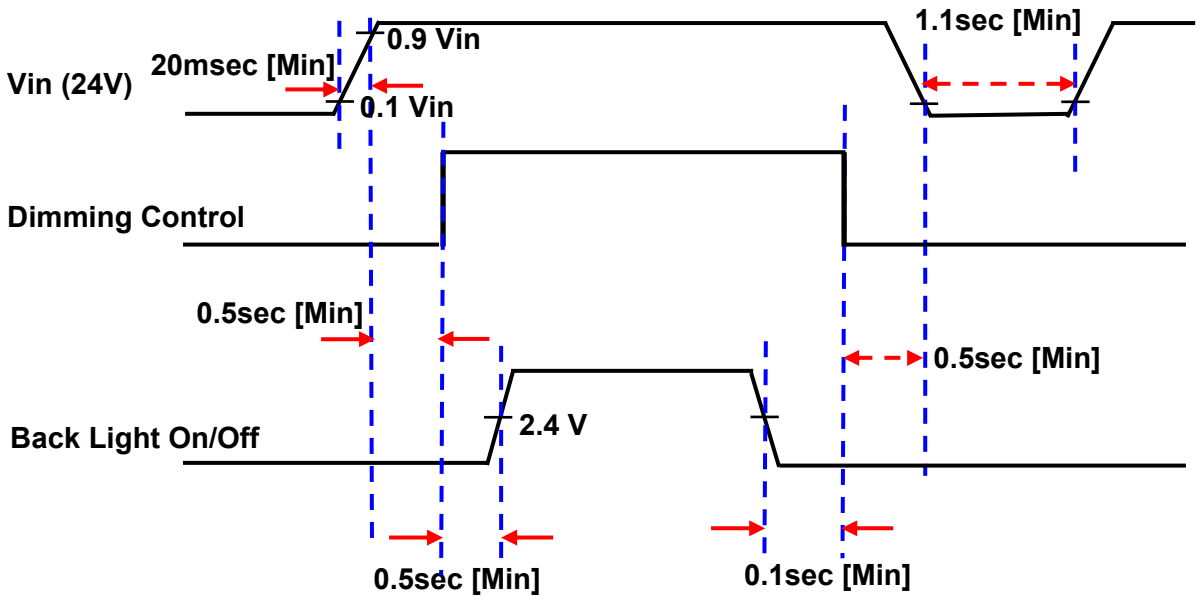

5.4 LVDS Interface
- LVDS Receiver : Tcon (merged)
- Data Format (JEIDA & Normal)

Default LVDS Option : JEIDA

	LVDS pin	JEIDA -DATA	VESA -DATA
TxOUT/RxIN0	TxIN/RxOUT0	R2	R0
	TxIN/RxOUT1	R3	R1
	TxIN/RxOUT2	R4	R2
	TxIN/RxOUT3	R5	R3
	TxIN/RxOUT4	R6	R4
	TxIN/RxOUT6	R7	R5
	TxIN/RxOUT7	G2	G0
TxOUT/RxIN1	TxIN/RxOUT8	G3	G1
	TxIN/RxOUT9	G4	G2
	TxIN/RxOUT12	G5	G3
	TxIN/RxOUT13	G6	G4
	TxIN/RxOUT14	G7	G5
	TxIN/RxOUT15	B2	B0
	TxIN/RxOUT18	B3	B1
TxOUT/RxIN2	TxIN/RxOUT19	B4	B2
	TxIN/RxOUT20	B5	B3
	TxIN/RxOUT21	B6	B4
	TxIN/RxOUT22	B7	B5
	TxIN/RxOUT24	HSYNC	HSYNC
	TxIN/RxOUT25	VSYNC	VSYNC
	TxIN/RxOUT26	DEN	DEN
TxOUT/RxIN3	TxIN/RxOUT27	R0	R6
	TxIN/RxOUT5	R1	R7
	TxIN/RxOUT10	G0	G6
	TxIN/RxOUT11	G1	G7
	TxIN/RxOUT16	B0	B6
	TxIN/RxOUT17	B1	B7
	TxIN/RxOUT23	RESERVED	RESERVED

5.5 Input Signals, Basic Display Colors and Gray Scale of Each Color

COLOR	DISPLAY (8bit)	DATA SIGNAL																								GRAY SCALE LEVEL
		RED								GREEN								BLUE								
		R0	R1	R2	R3	R4	R5	R6	R7	G0	G1	G2	G3	G4	G5	G6	G7	B0	B1	B2	B3	B4	B5	B6	B7	
BASIC COLOR	BLACK	0	0	0	0	0	0	0	0	0	0	0	0	0	0	0	0	0	0	0	0	0	0	0	0	-
	BLUE	0	0	0	0	0	0	0	0	0	0	0	0	0	0	0	0	1	1	1	1	1	1	1	1	-
	GREEN	0	0	0	0	0	0	0	0	1	1	1	1	1	1	1	1	0	0	0	0	0	0	0	0	-
	CYAN	0	0	0	0	0	0	0	0	1	1	1	1	1	1	1	1	1	1	1	1	1	1	1	1	-
	RED	1	1	1	1	1	1	1	1	0	0	0	0	0	0	0	0	0	0	0	0	0	0	0	0	-
	MAGENTA	1	1	1	1	1	1	1	1	0	0	0	0	0	0	0	0	1	1	1	1	1	1	1	1	-
	YELLOW	1	1	1	1	1	1	1	1	1	1	1	1	1	1	1	1	0	0	0	0	0	0	0	0	-
	WHITE	1	1	1	1	1	1	1	1	1	1	1	1	1	1	1	1	1	1	1	1	1	1	1	1	-
GRAY SCALE OF RED	BLACK	0	0	0	0	0	0	0	0	0	0	0	0	0	0	0	0	0	0	0	0	0	0	0	0	R0
	DARK ↑	1	0	0	0	0	0	0	0	0	0	0	0	0	0	0	0	0	0	0	0	0	0	0	0	R1
		0	1	0	0	0	0	0	0	0	0	0	0	0	0	0	0	0	0	0	0	0	0	0	0	R2
		:	:	:	:	:	:			:	:	:	:	:	:			:	:	:	:	:	:			R3~ R252
		:	:	:	:	:	:			:	:	:	:	:	:			:	:	:	:	:	:			
	↓ LIGHT	1	0	1	1	1	1	1	1	0	0	0	0	0	0	0	0	0	0	0	0	0	0	0	0	R253
		0	1	1	1	1	1	1	1	0	0	0	0	0	0	0	0	0	0	0	0	0	0	0	0	R254
	RED	1	1	1	1	1	1	1	1	0	0	0	0	0	0	0	0	0	0	0	0	0	0	0	0	R255
GRAY SCALE OF GREEN	BLACK	0	0	0	0	0	0	0	0	0	0	0	0	0	0	0	0	0	0	0	0	0	0	0	0	G0
	DARK ↑	0	0	0	0	0	0	0	0	1	0	0	0	0	0	0	0	0	0	0	0	0	0	0	0	G1
		0	0	0	0	0	0	0	0	0	1	0	0	0	0	0	0	0	0	0	0	0	0	0	0	G2
		:	:	:	:	:	:			:	:	:	:	:	:			:	:	:	:	:	:			G3~ G252
		:	:	:	:	:	:			:	:	:	:	:	:			:	:	:	:	:	:			
	↓ LIGHT	0	0	0	0	0	0	0	0	1	0	1	1	1	1	1	1	0	0	0	0	0	0	0	0	G253
		0	0	0	0	0	0	0	0	0	1	1	1	1	1	1	1	0	0	0	0	0	0	0	0	G254
	GREEN	0	0	0	0	0	0	0	0	1	1	1	1	1	1	1	1	0	0	0	0	0	0	0	0	G255
GRAY SCALE OF BLUE	BLACK	0	0	0	0	0	0	0	0	0	0	0	0	0	0	0	0	0	0	0	0	0	0	0	0	B0
	DARK ↑	0	0	0	0	0	0	0	0	0	0	0	0	0	0	0	0	1	0	0	0	0	0	0	0	B1
		0	0	0	0	0	0	0	0	0	0	0	0	0	0	0	0	0	1	0	0	0	0	0	0	B2
		:	:	:	:	:	:			:	:	:	:	:	:			:	:	:	:	:	:			B3~ B252
		:	:	:	:	:	:			:	:	:	:	:	:			:	:	:	:	:	:			
	↓ LIGHT	0	0	0	0	0	0	0	0	0	0	0	0	0	0	0	0	1	0	1	1	1	1	1	1	B253
		0	0	0	0	0	0	0	0	0	0	0	0	0	0	0	0	0	1	1	1	1	1	1	1	B254
	BLUE	0	0	0	0	0	0	0	0	0	0	0	0	0	0	0	0	1	1	1	1	1	1	1	1	B255

Note) Definition of Gray :

Rn : Red Gray, Gn : Green Gray, Bn : Blue Gray (n = Gray level)

Input Signal : 0 = Low level voltage, 1 = High level voltage

6. Interface Timing

6.1 Timing Parameters (DE only mode)

Signal	Item	Symbol	Min.	Typ.	Max.	Unit	Note
Clock	Frequency	$1/T_C$	130.0	148.5	155.0	MHz	-
Hsync		F_H	65.0	67.5	70.0	KHz	-
Vsync		F_V	-	60	-	Hz	-
Vertical Display Term	Active Display Period	T_{VD}	-	1080	-	Lines	-
	Vertical Total	T_V	1092	1125	1380	Lines	-
Horizontal Display Term	Active Display Period	T_{HD}	-	1920	-	Clocks	-
	Horizontal Total	T_H	2090	2200	2350	Clocks	-

Note) This product is DE only mode. The input of Hsync & Vsync signal does not have an effect on normal operation.
Test Point : TTL control signal and CLK at LVDS Tx input terminal in system

6.2 Timing diagrams of interface signal (DE only mode)

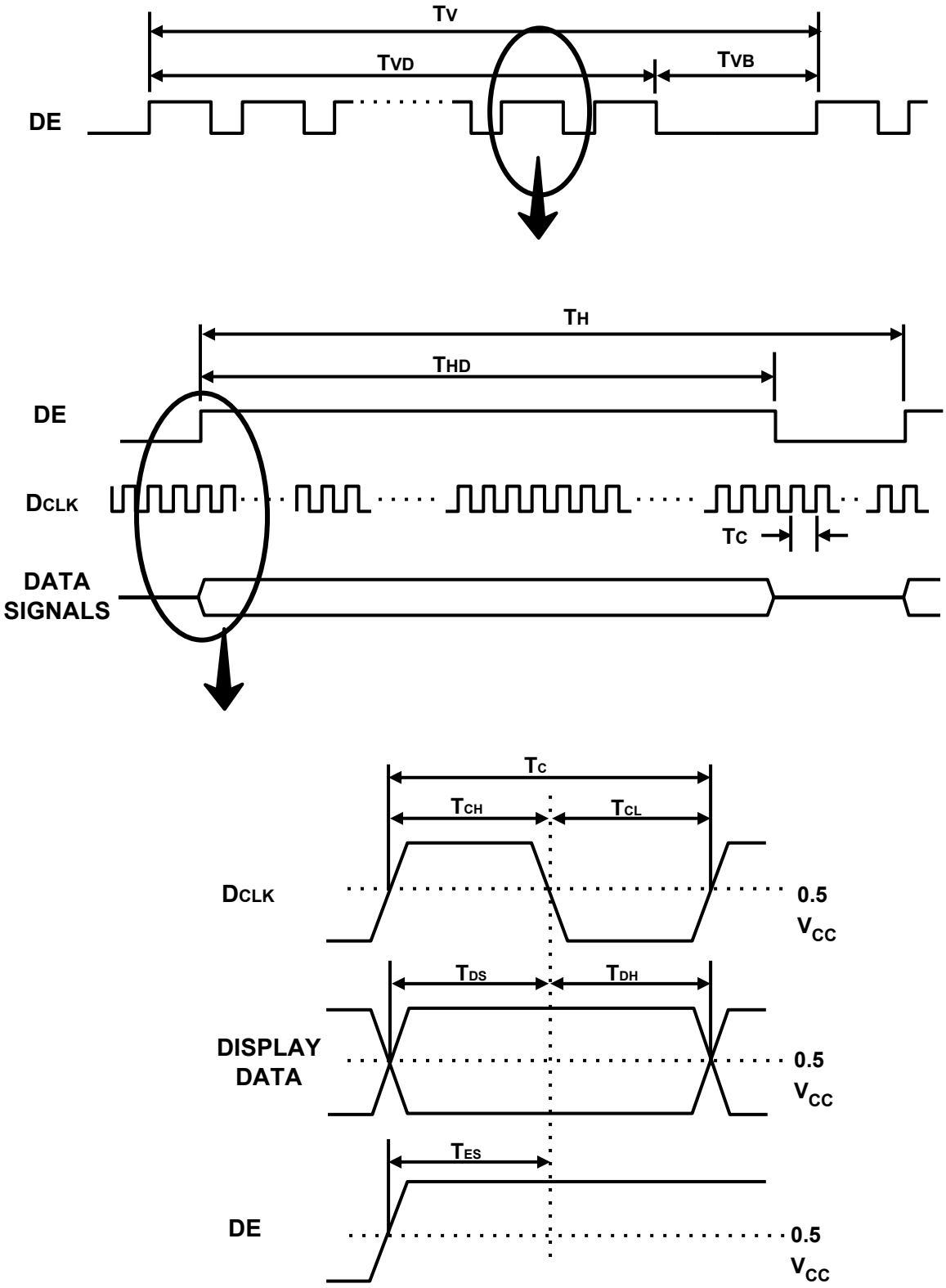

6.3 Power ON/OFF Sequence

To prevent a latch-up or DC operation of the LCD Module, the power on/off sequence should be as the diagram below.

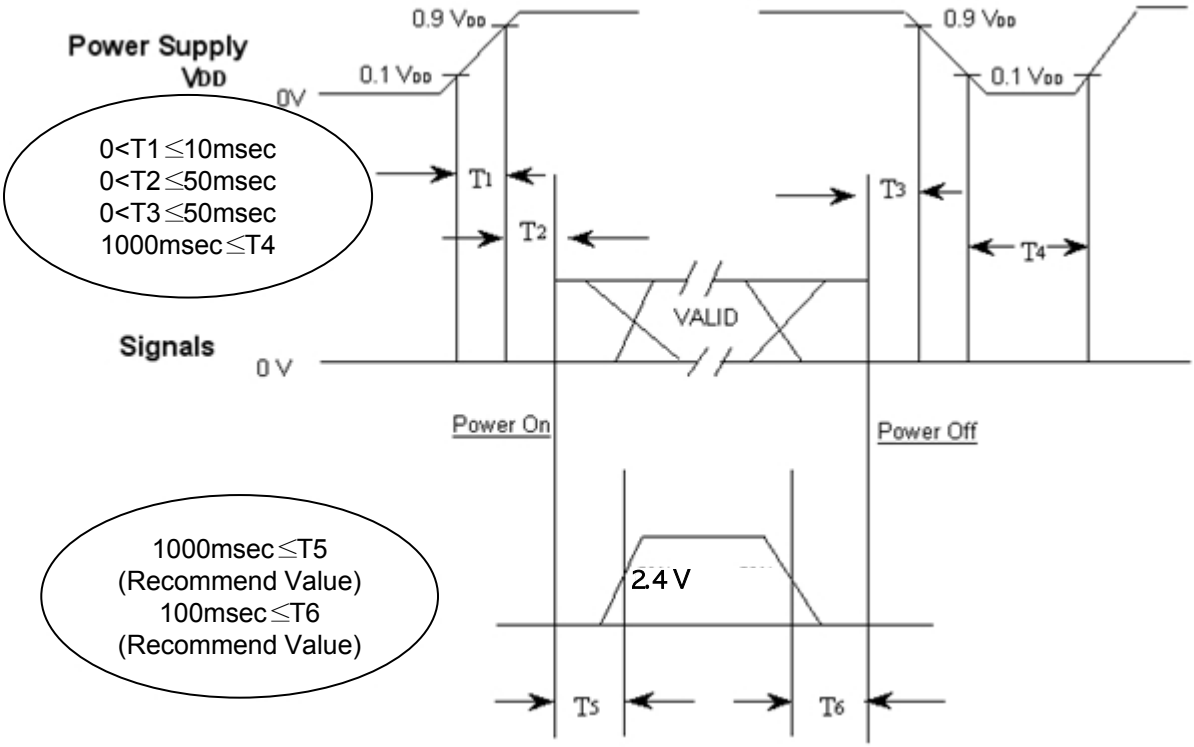

T1 : V_{DD} rising time from 10% to 90%
T2 : The time from V_{DD} to valid data at power ON.
T3 : The time from valid data off to V_{DD} off at power Off.
T4 : V_{DD} off time for Windows restart
T5 : The time from valid data to B/L enable at power ON.
T6 : The time from valid data off to B/L disable at power Off.

- The supply voltage of the external system for the Module input should be the same as the definition of V_{DD}.
- Apply the lamp voltage within the LCD operation range. When the backlight turns on before the LCD operation or the LCD turns off before the backlight turns off, the display may momentarily show abnormal screen.
- In case of V_{DD} = off level, please keep the level of input signals low or keep a high impedance.
- T4 should be measured after the Module has been fully discharged between power off and on period.
- Interface signal should not be kept at high impedance when the power is on.

7. Outline Dimension (Front View)

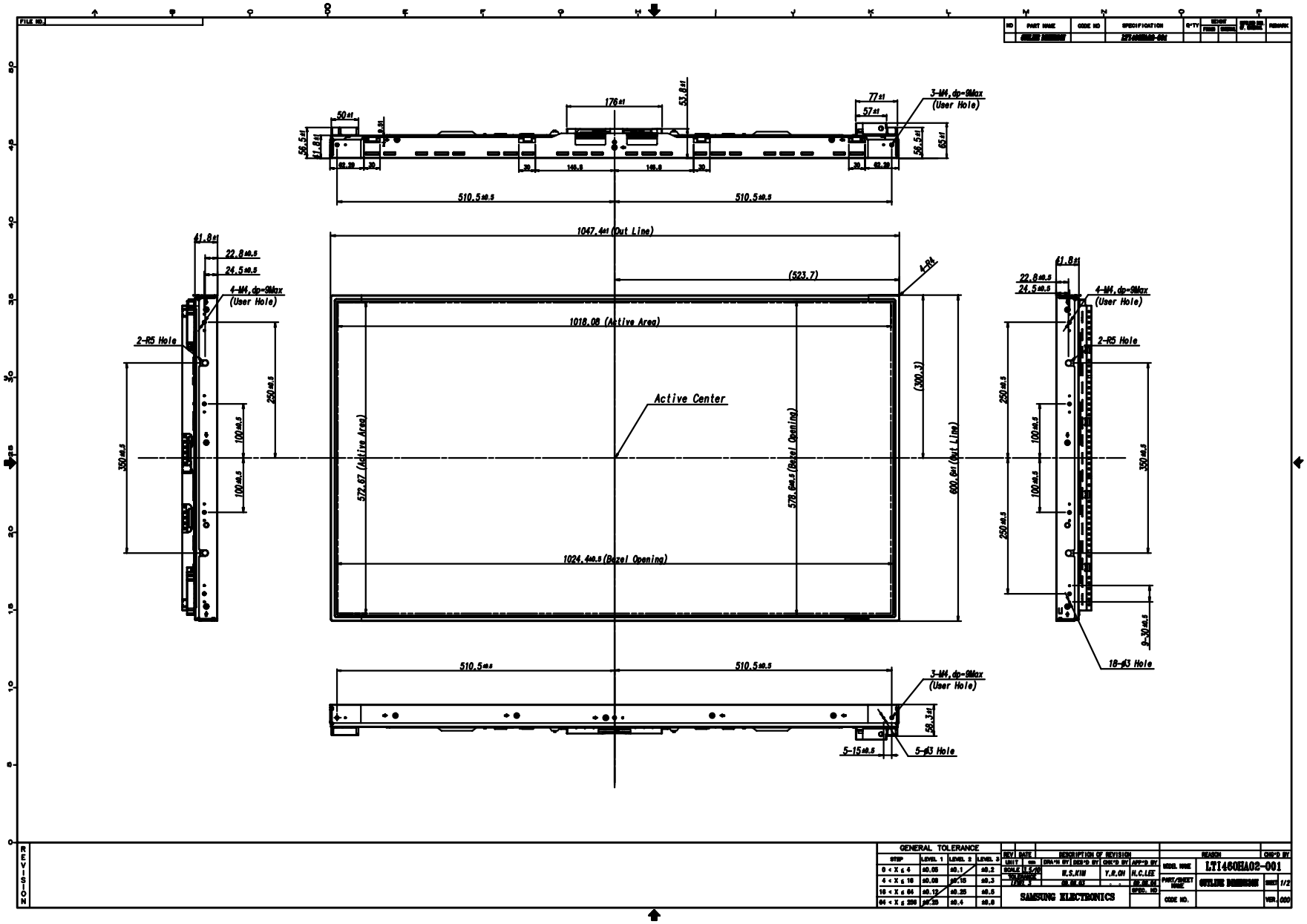

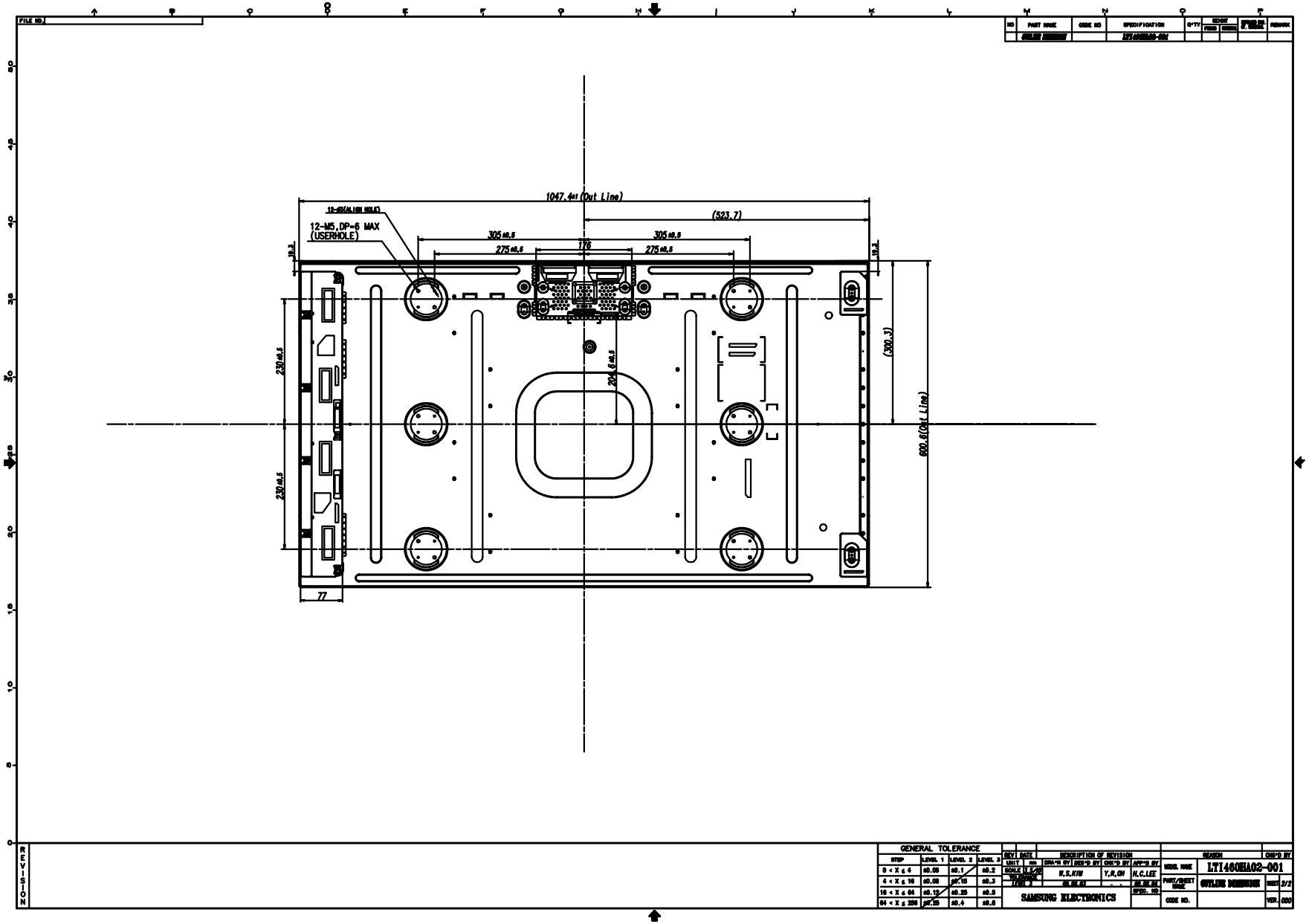
1047.4±1 (Out Line)
(523.7)
12-M5,DP=6 MAX
(USERHOLE)
305±0.5
305±0.5
275±0.5
176
275±0.5
19.2
19.2
230±0.5
230±0.5
204.6±0.5
(300.3)
600.6(Out Line)
77
GENERAL TOLERANCE
STEP
LEVEL 1
LEVEL 2
LEVEL 3
0 < X ≤ 4
±0.05
±0.1
±0.2
4 < X ≤ 16
±0.08
±0.15
±0.3
16 < X ≤ 64
±0.12
±0.25
±0.5
64 < X ≤ 256
±0.20
±0.4
±0.8
REV
DATE
DESCRIPTION OF REVISION
DRA'N BY
DES'D BY
CHK'D BY
APP'D BY
W.S.KIM
Y.R.OH
H.C.LEE
SAMSUNG ELECTRONICS
REASON
CHK'D BY
MODEL NAME
LT1460HA02-001
PART/SHEET NAME
OUTLINE DIMENSION
SHEET
2/2
CODE NO.
VER.
000
REVISION

8. PACKING

8.1 CARTON (Internal Package)

(1) Packing Form

Corrugated fiberboard box and corrugated cardboard as shock absorber

(2) Packing Method

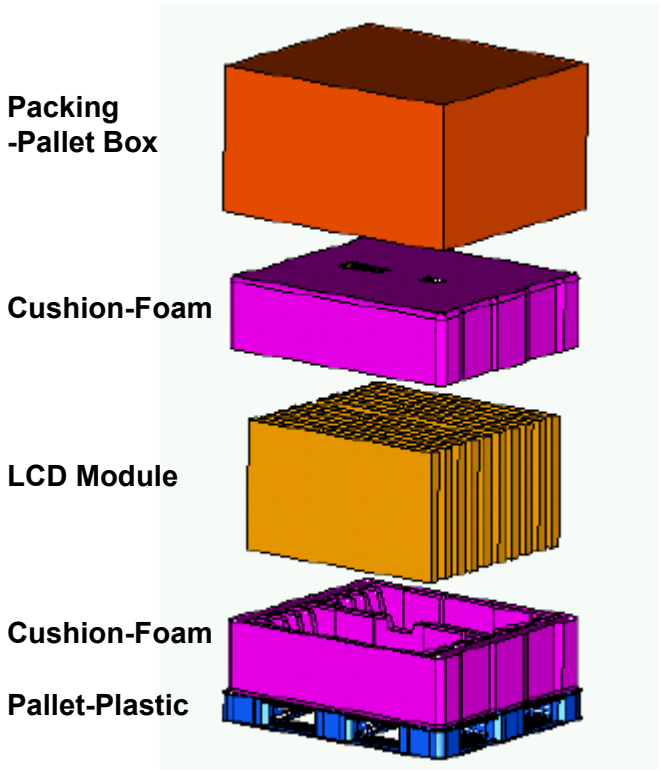

→ **Direction be able to open it**

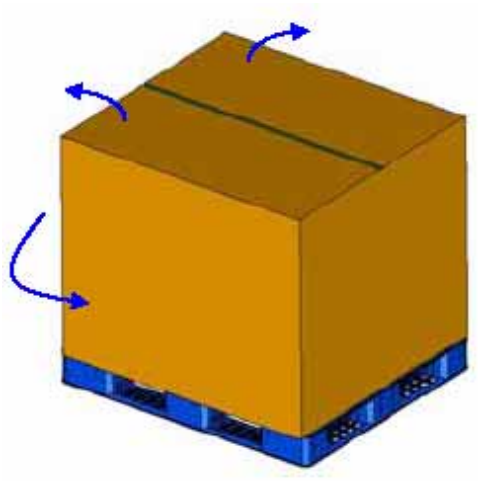

8.2 Packing Specification

Item	Specification	Remark
LCD Packing	10ea / (Packing-Pallet Box)	1. 145 Kg / LCD (10ea) 2. 10 Kg / Cushion-pallet (2ea) 3. 8 Kg / Packing-Pallet Box (1ea) 4. Cushion-pallet Material : EPS 5. Packing-Pallet Box Material : DW4
Pallet	1Box / Pallet	1. Pallet weight = 8.8kg
Packing Direction	Vertical	
Total Pallet Size	H x V x height	1270mm(H) x 1150mm(V) x 844mm(height)
Total Pallet Weight	171.8 kg	Pallet(8.8kg) + Module (14.5*10=145kg) + Cushion (up + bottom=10kg) + Pallet-BOX(8kg)

9. MARKING & OTHERS

A nameplate bearing followed by is affixed to a shipped product at the specified location on each product.

(1) Part number : LTI460HA02
(2) Revision: Three letters
(3) Lot number : X X X X XXX XX X

- Cell Position No. (In the Glass)
- Glass No. (In the one Lot)
- Lot No. (Glass)
- Month
- Year (Note1)
- Product code
- Line

(4) Nameplate Indication

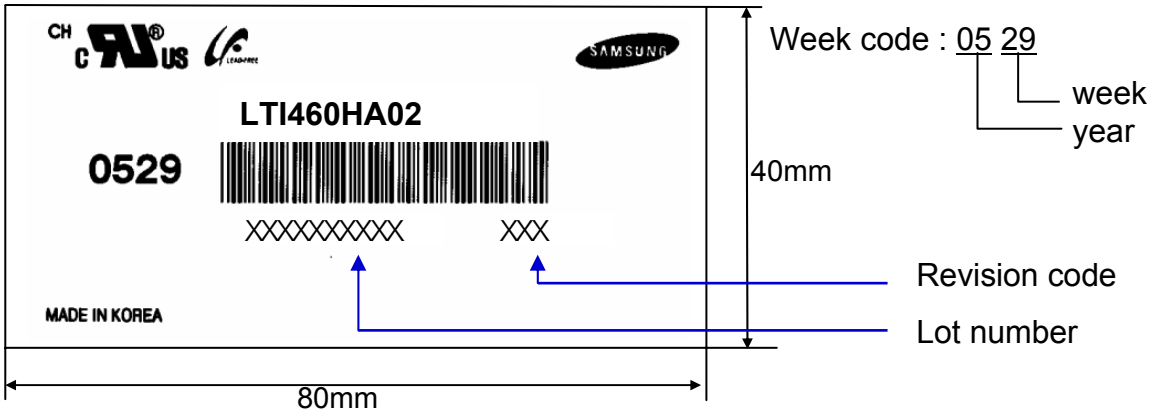

(5) Packing box attach

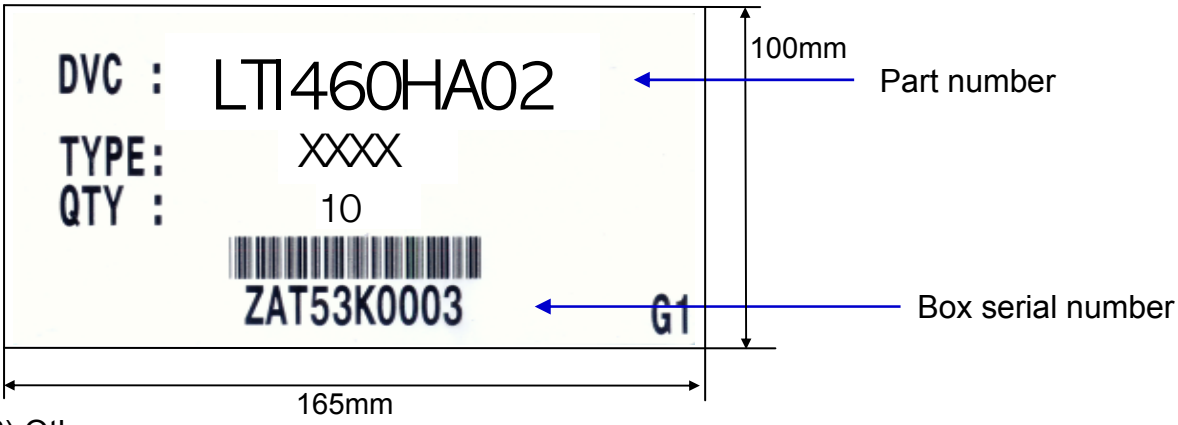

(6) Others

1. After service part
   Lamps cannot be replaced because of the narrow bezel structure.

10. General Precautions

10.1 Handling

(a) When the Module is assembled, it should be attached to the system firmly using all mounting holes. Be careful not to twist and bend the Module.

(b) Because the inverter use high voltage, it should be disconnected from power before it is assembled or disassembled.

(c) Refrain from strong mechanical shock and / or any force to the Module.
In addition to damage, this may cause improper operation or damage to the Module and CCFT backlight.

(d) Note that polarizers are very fragile and could be damage easily.
Do not press or scratch the surface harder than a HB pencil lead.

(e) Wipe off water droplets or oil immediately. If you leave the droplets for a long time, staining or discoloration may occur.

(f) If the surface of the polarizer is dirty, clean it using absorbent cotton or soft cloth.

(g) Desirable cleaners are water, IPA(Isopropyl Alcohol) or Hexane.
Do not use Ketone type materials(ex. Acetone), Ethyl alcohol, Toluene, Ethyl acid or Methyl chloride. It might permanent damage to the polarizer due to chemical reaction.

(h) If the liquid crystal material leaks from the panel, it should be kept away from the eyes or mouth . In case of contact with hands, legs or clothes, it must be washed away with soap thoroughly.

(i) Protect the Module from static, or the CMOS Gate Array IC would be damaged.

(j) Use finger-stalls with soft gloves in order to keep display clean during the incoming inspection and assembly process.

(k) Do not disassemble the Module.

(l) Do not adjust the variable resistor located on the Module.

(m) Protection film for polarizer on the Module should be slowly peeled off just before use so that the electrostatic charge can be minimized.

(n) Pins of I/F connector should not be touched directly with bare hands.

10.2 Storage

(a) Do not leave the Module in high temperature, and high humidity for a long time. It is highly recommended to store the Module with temperature from 0 to 35℃ and relative humidity of less than 70%.

(b) Do not store the TFT-LCD Module in direct sunlight.

(c) The Module should be stored in a dark place. It is prohibited to apply sunlight or fluorescent light in storing.

10.3 Operation

(a) Do not connect or disconnect the Module in the "Power On" condition.

(b) Power supply should always be turned on/off by the "Power on/off sequence"

(c) Module has high frequency circuits. Sufficient suppression to the electromagnetic interference should be done by system manufacturers.
Grounding and shielding methods may be important to minimize the interference.

(d) The cable between the backlight connector and its inverter power supply should be connected directly with a minimized length. A longer cable between the backlight and the inverter may cause lower luminance of lamp(CCFT) and may require higher startup voltage(Vs).

10.4 Operation Condition Guide

(a) The LCD product should be operated under normal conditions.
Normal condition is defined as below;
- Temperature : 20±15℃
- Humidity : 55±20%
- Display pattern : continually changing pattern (Not stationary)

(b) If the product will be used in extreme conditions such as high temperature, humidity, display patterns or operation time etc.., It is strongly recommended to contact SEC for Application engineering advice. Otherwise, its reliability and function may not be guaranteed. Extreme conditions are commonly found at Airports, Transit Stations, Banks, Stock market, and Controlling systems.

10.5 Others

(a) Ultra-violet ray filter is necessary for outdoor operation.

(b) Module should be turned clockwise (regular front view perspective) when used in portrait mode

(c) Avoid condensation of water. It may result in improper operation or disconnection of electrode.

(d) Do not exceed the absolute maximum rating value. (supply voltage variation, input voltage variation, variation in part contents and environmental temperature, and so on)
Otherwise the Module may be damaged.

(e) If the Module keeps displaying the same pattern for a long period of time, the image may be "sticked" to the screen.
To avoid image sticking, it is recommended to use a screen saver.

(f) This Module has its circuitry PCB's on the rear side and should be handled carefully in order not to be stressed.

(g) Please contact SEC in advance when you display the same pattern for a long time.