SAMSUNG ELECTRONICS

TO :

Date : 2001. 10 . 30

SAMSUNG TFT-LCD

MODEL NO. : LTM213U3-L07

Note: _____

_____

_____

_____

Any Modification of Spec is not allowed without SEC's permission.

Prepared by : _____

Checked by : _____

Approved by : _____

Samsung Electronics Co . , LTD.

wise view™ SAMSUNG TFT-LCD

Contents

Revision History ---------- (3)

General Description ---------- (4)

1. Absolute Maximum Ratings ---------- (5)
   - 1.1 Absolute Ratings Of Environment
   - 1.2 Electrical Absolute Ratings

2. Optical Characteristics ---------- (7)

3. Electrical Characteristics ---------- (11)
   - 3.1 TFT LCD Module
   - 3.2 Back-light Unit

4. Block Diagram ---------- (14)
   - 4.1 TFT LCD Module
   - 4.2 Back-light Unit

5. Input Terminal Pin Assignment ---------- (15)
   - 5.1 Input Signal
   - 5.2 Open LDI Interface
   - 5.3 Input Power
   - 5.4 Back-light Unit
   - 5.5 Input Signals, Basic Display Colors and Gray Scale of Each Color

6. Interface Timing ---------- (19)
   - 6.1 Timing Parameters (DE only mode)
   - 6.2 Timing Diagrams of interface Signal (DE only mode)
   - 6.3 Power ON/OFF Sequence

7. Outline Dimension ---------- (22)

* Revision History

Date	Rev. No	Page	Summary
May.30, 2001	000		PI of LTM213U3-L07 model was issued for the first time.

General Description

* Description

LTM213U3-L07 is a color active matrix TFT (Thin Film Transistor) liquid crystal display (LCD) that uses amorphous silicon TFTs as a switching devices. This model is composed of a TFT LCD panel, a driver circuit and a back-light system. The resolution of a 21.3" contains 1600 x 1200 pixels and can display up to 16.7 million colors with wide viewing angle of 80° or higher in all directions. (Vertical viewing angle : 160° , Horizontal viewing angle : 160°)

* Features

- High contrast ratio, high aperture structure
- APVA(Advance Patterned Vertical Alignment) Mode
- Wide viewing angle(± 160°)
- High speed response
- UXGA(1600 x 1200 pixels) resolution
- Low Power consumption
- Replaceable 6 CCFTs(Cold Cathode Fluorescent Tube)
- DE only mode
- Open LDI (LVDS Display Interface) : DS90CF388

* Applications

- Workstation & desktop monitors
- Display terminals for AV application products
- Monitors for industrial machine and medical appliances

* General information

Items	Specification	Unit	Note
Display area	432(H) x324(V) (21.3inch diagonal)	mm	
Driver element	a-Si TFT active matrix		
Display colors	16.7M(true 8-bit)	colors	
Number of pixels	1600 x 1200	pixel	
Pixel arrangement	RGB vertical stripe		
Pixel pitch	0.27(H) x 0.27(W)	mm	
Display mode	Normally Black		
Surface treatment	Haze 25% , Hard - coating (3H)		conduction pol.

*** Mechanical information**

Item		Min.	Typ.	Max.	Note
Module size	Horizontal(H)	482.5	483.0	483.5	mm
	Vertical(V)	372.7	373.2	373.7	mm
	Depth(D)	-	-	29.5	mm
Weight		-	-	4.5	kg

1. Absolute Maximum Ratings

1.1 Absolute ratings of environment

Item	Symbol	Min.	Max.	Unit	Note
Storage temperature	T_{STG}	-20	65	℃	(1)
Operating temperature (Ambient temperature)	T_{OPR}	0	50	℃	(1)
Shock (non - operating)	Snop	-	50	G	(2),(4)
Vibration (Non - operating)	Vnop	-	1.0	G	(3),(4)

Note (1) Temperature and relative humidity range are shown in the figure below.
90 % RH Max. (40 °C ≥ Ta)
Maximum wet-bulb temperature at 39 °C or less. (Ta > 40 °C) No condensation.

(2) 11ms, sine wave, 1 time for ±X, ±Y, ±Z axis

(3) 10-300 Hz, Sweep rate 10min, 120min for X,Y,Z axis

(4) At testing Vibration and Shock, the fixture in holding the Module to be tested have to be hard and rigid enough so that the Module would not be twisted or bent by the fixture.

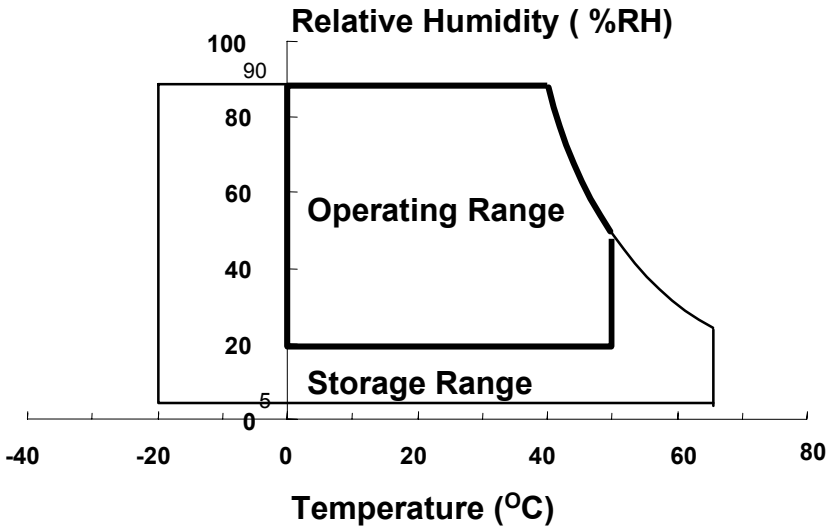

1.2 ELECTRICAL ABSOLUTE RATINGS

(1) TFT LCD Module (Vss = GND = 0 V)

Item	Symbol	Min.	Max.	Unit	Note
Power Supply Voltage	VDD	Vss-0.5	6.5	V	(1)

NOTE (1) Within Ta (25 ± 2 °C)

(2) BACK-LIGHT UNIT (Ta = 25 ± 2°C)

Item	Symbol	Min.	Max.	Unit.	Note
Lamp Current	I_L	3.0	8.0	mArms	(1),(2)
Lamp Frequency	F_L	30	70	kHz	(1)

NOTE (1) Permanent damage to the device may occur if maximum values are exceeded. Functional operation should be restricted to the conditions described under Normal Operating Conditions.

(2) Specified values are for a single lamp.
(Refer to the Note (1) in the page 15 for further information)

2. Optical Characteristics

The following items are measured under stable conditions. The optical characteristics should be measured in a dark room or equivalent state with the methods shown in Note (1).

◆ Measuring equipment : TOPCON BM-5A , BM-7, PHOTO RESEARCH PR650
Eldim EZ-Contrast

(Inverter Freq. : 60kHz) * Ta = 25 ± 2°C , V_{DD}=5V, fv= 60Hz, f_{DCLK}= 90MHz, I_L = 6.5mA_{rms}

Item		Symbol	Condition	Min.	Typ.	Max.	Unit	Note
Contrast Ratio (Center of screen)		C/R	Normal ϕ = 0 θ = 0 Viewing Angle	400	450	-		(3) BM-5A
Response Time	Rising	Tr		-	20	25	msec	(4) BM-7
	Falling	Tf		-	15	20		
Luminance of White (Center of screen)		Y_L		220	250	-	cd/m2	(5) BM-5A
Color Chromaticity (CIE 1931)	Red	Rx		TYP. -0.03	0.632	TYP. +0.03		(6) PR650
		Ry			0.353			
	Green	Gx			0.293			
		Gy			0.590			
	Blue	Bx			0.140			
		By			0.090			
	White	Wx			0.310			
		Wy			0.330			
Viewing Angle	Hor.	θ L	C/R≥10	70	80	-	Degrees	(7) BM-5A
		θ R		70	80	-		
	Ver.	ϕ H		70	80	-		
		ϕ L		70	80	-		
Brightness Uniformity (9 points)		Buni		-	-	30	%	(8) BM-5A

Note 1) Test Equipment Setup

After stabilizing and leaving the panel alone at a given temperature for 30 min ,the measurement should be executed. Measurement should be executed in a stable, windless, and dark room. 30 min after lighting the back-light. This should be measured in the center of screen.

A single lamp current : 6.5mA (Refer to the note(1) in the page 15 for more information.)

Environment condition : Ta = 25 ± 2 °C

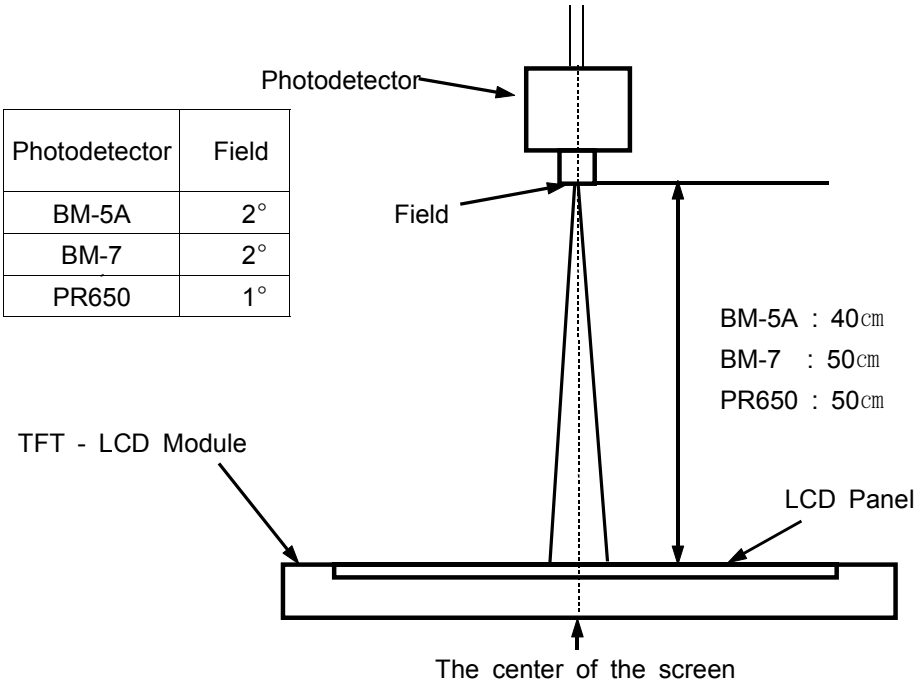

Photodetector	Field
BM-5A	2°
BM-7	2°
PR650	1°

Optical Measuring Equipment Setup

Note 2) Definition of test point

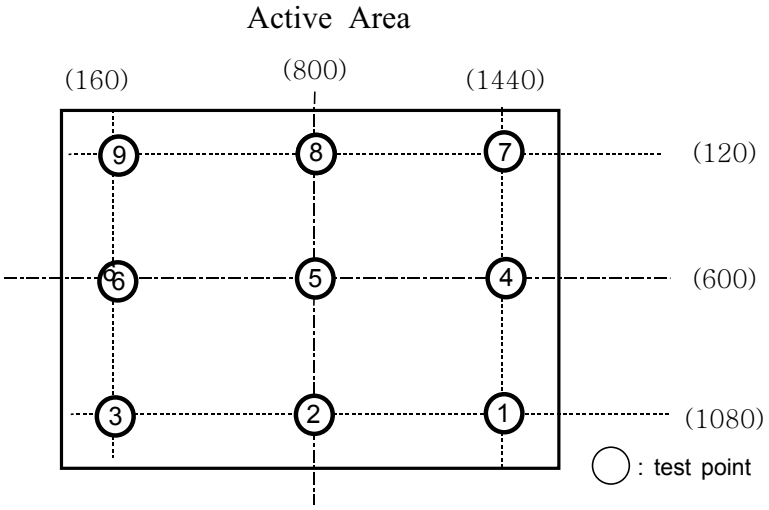

Note 3) Definition of Contrast Ratio (C/R) : Ratio of gray max (Gmax) & gray min (Gmin) at the center point(5) of the panel

$$CR = \frac{G\max}{G\min}$$

Gmax : Luminance with all pixels white

Gmin : Luminance with all pixels black

Note 4) Definition of Response time : Sum of Tr ,Tf

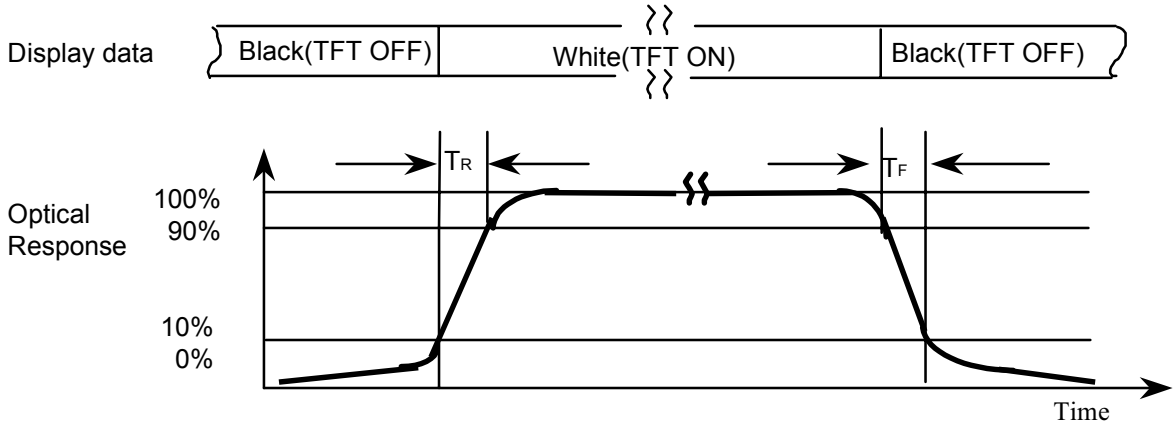

Note 5) Definition of Luminance of White : Luminance of white at center point(5).

Note 6) Definition of Color Chromaticity (CIE 1931)

Color coordinate of Red , Green , Blue & White at center point(5).

Note 7) Definition of Viewing Angle : Viewing angle range (CR≥ 10)

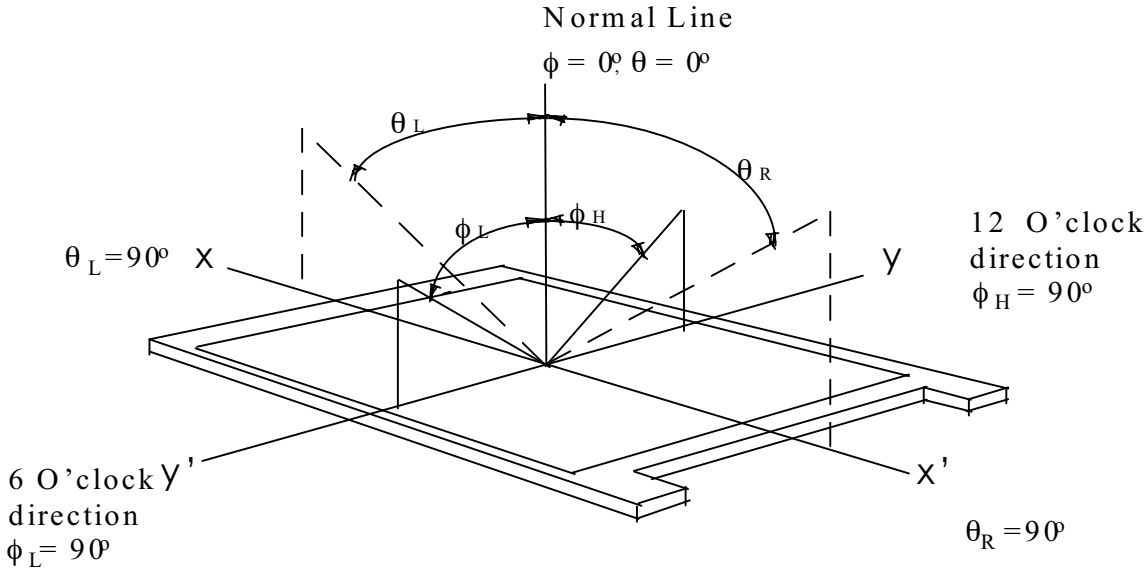

Note 8) Definition of 9 points brightness uniformity

$$Buni = 100 * \frac{(B\max - B\min)}{B\max}$$

Bmax : Maximum brightness

Bmin : Minimum brightness

3. Electrical Characteristics

3.1 TFT LCD MODULE

Ta = 25°C

Item		Symbol	Min.	Typ.	Max.	Unit	Note
Voltage of Power Supply		V_{DD}	4.5	5.0	5.5	V	(1)
Interface type		LVDS	Open LDI (DS90C387 / 388 Pair)				
Current of Power Supply	(a)Black	I_{DD}	-	1100	1300	mA	(2),(3)
	(b)Mosaic		-	1300	1500	mA	
	(c)2Line Vertical		-	1400	1700	mA	
Vsync Frequency		f_V	58	60	60	Hz	2pxl/clk
Hsync Frequency		f_H	70	75	75	kHz	
Main Frequency		f_{DCLK}	62	81	82	MHz	
Rush Current		I_{RUSH}	-	-	4.0	A	(4)

Note (1) Main pixel clock frequency is the value which is measured at the input of LVDS transmitter.

(2) f_V=60Hz, f_{DCLK} =81MHz, V_{DD} = 5.0V, DC Current.

(3) Power dissipation check pattern(LCD Module only)

a)Black Pattern

b)Mosaic Pattern

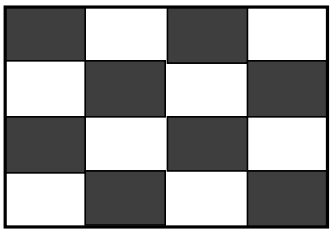

c)2-Line Ver. Pattern

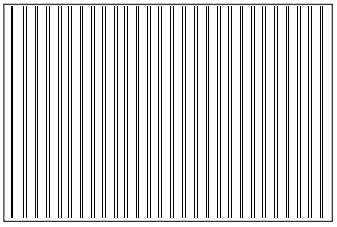

(4) Measurement Conditions

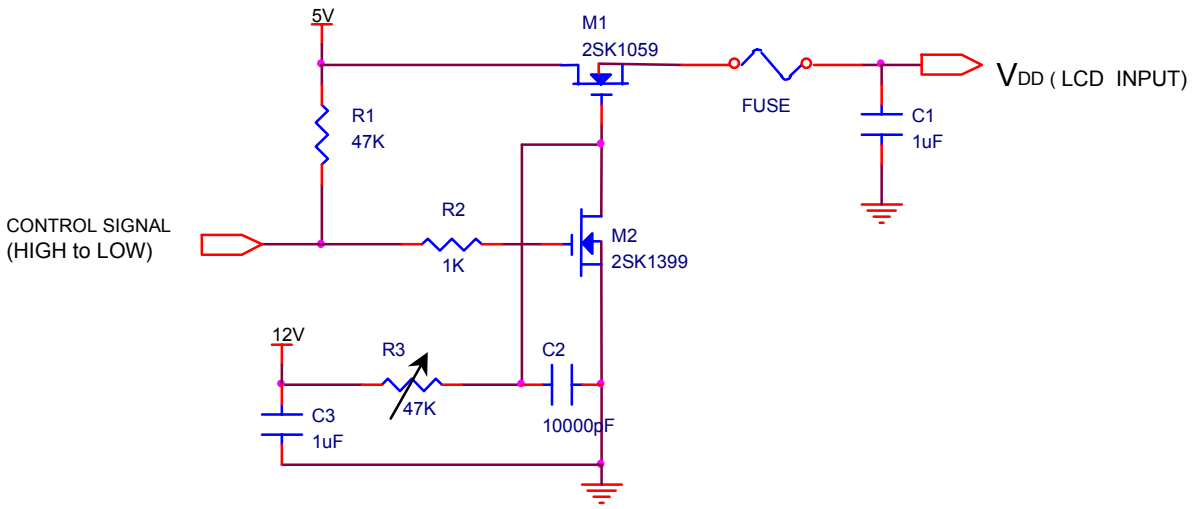

Note : Control Signal : High(+5V) -->Low(Ground)

All Signal lines to panel except for power 5V : Ground

The rising time of supplied voltage is controlled to 470us by R3 and C2 value.

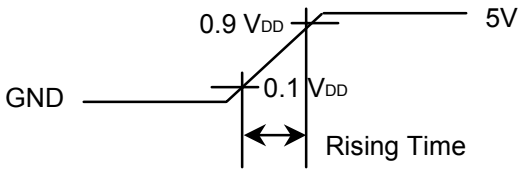

3.2 BACK-LIGHT UNIT

The back-light system is an edge - lighting type with 2 dual CCFTs (Cold Cathode Fluorescent Tube) The characteristics of two dual lamps are shown in the following tables.

Ta=25 ± 2°C

Item	Symbol	Min.	Typ.	Max.	Unit	Note
Lamp Current	I_L	2.0	6.5	6.5	mArms	(1)
Lamp Voltage	V_L	-	860	-	Vrms	(1)
Lamp Frequency	f_L	30	-	60	kHz	(2)
Start up Voltage	Vs	-	-	0℃:1,800 25℃:1,300	Vrms	(3)

Note) The method of measurements inverter should be used PWM(Pulse Width Modulation).
The waveform of the inverter output voltage must be area symmetric and the design of the inverter must have specifications for the modularized lamp.
The performance of the back-light, for example life time or brightness, is much influenced by the characteristics of the DC-AC inverter for the lamp. So all the parameters of an inverter should be carefully designed so as not to produce too much leakage current from high-voltage output of the inverter. When you design or order the inverter, please make sure that a poor lighting caused by the mismatch of the back-light and the inverter(miss lighting, flicker, etc.) never occur. When you confirm it, the module should be operated in the same condition as it is installed in your instrument.

Note (1) Triple lamp current is measured with current meter for high frequency as shown below.
Refer to the block diagram of the back-light unit in the next page for more information.
Specified values are for a triple lamp.

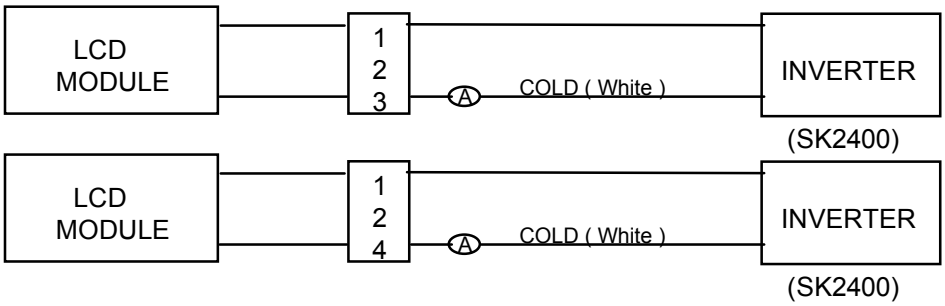

(2) Lamp frequency may produce interference with horizontal synchronous frequency and this may cause line flow on the display. Therefore lamp frequency shall be detached from the horizontal synchronous frequency and its harmonics as far as possible in order to avoid interference.

(3) If an inverter has shutdown function it should keep its output for more than 1 second even if the lamp connector open. Otherwise the lamps may not to be turned on.

4. Block Diagram

4.1 TFT LCD MODULE

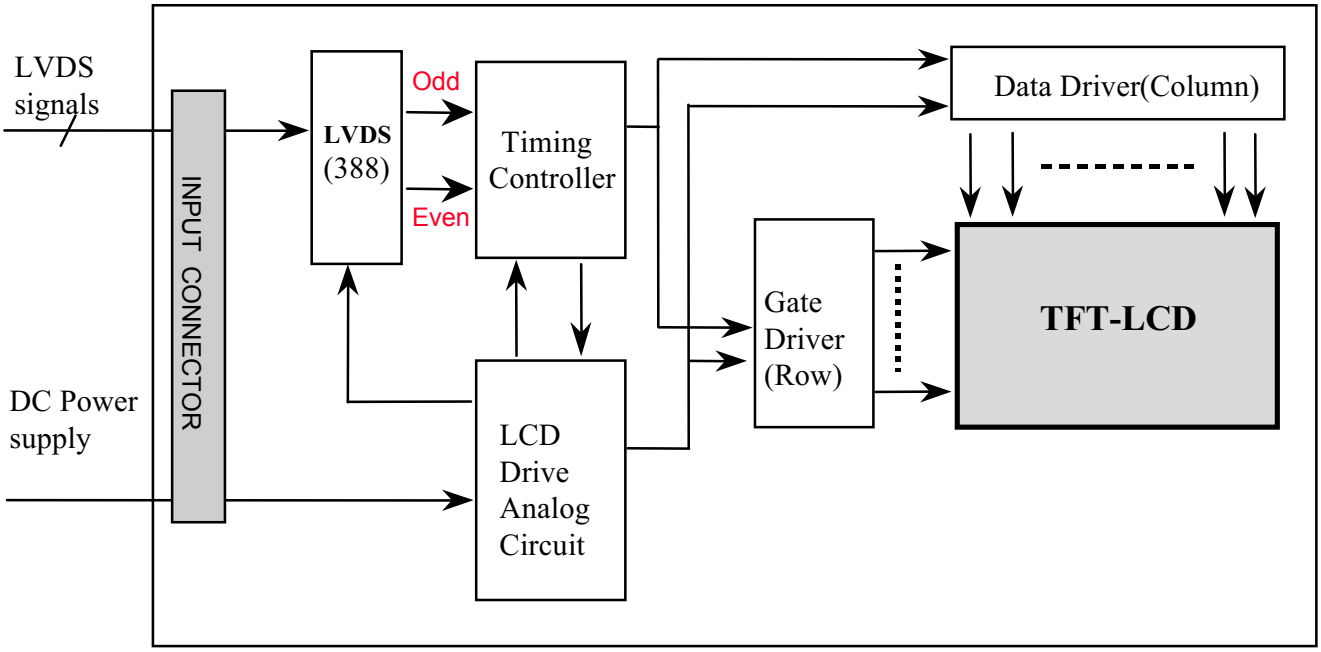

4.2 BACK-LIGHT UNIT

Connector: JST BHR-04VS-1, BHR-03VS-1

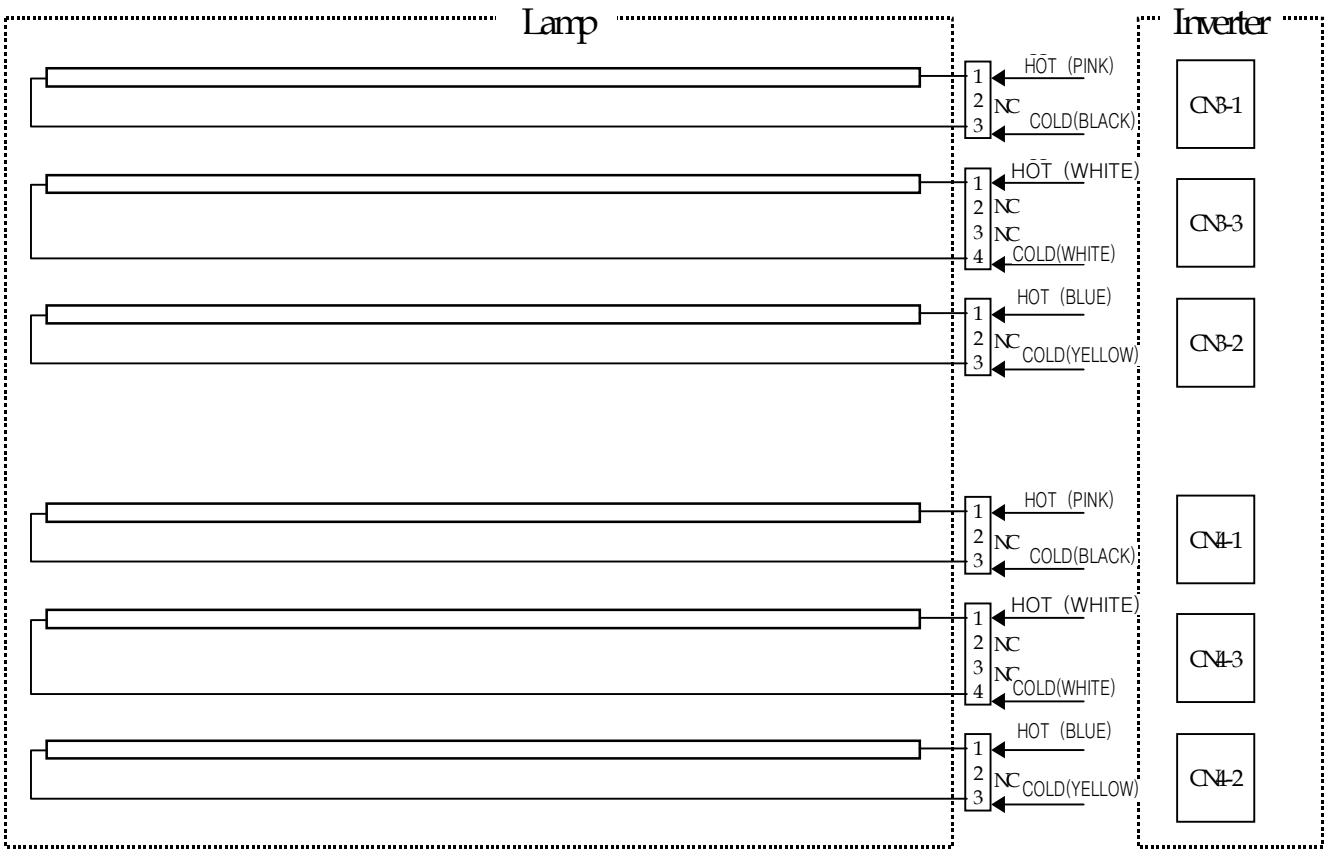

5. Input Terminal Pin Assignment

5.1. Input Signal (Connector : JAE WE31P-HF)
(Mating Connector :JAE F1-WE31S-HF)

Pin No	Symbol	Function
1	GND	Ground
2		
3	A0M	Negative LVDS differential data output
4	A0P	Positive LVDS differential data output
5	A1M	Negative LVDS differential data output
6	A1P	Positive LVDS differential data output
7	A2M	Negative LVDS differential data output
8	A2P	Positive LVDS differential data output
9	GND	Ground
10		
11	CLKM	Negative LVDS differential clock output
12	CLKP	Positive LVDS differential clock output
13	A3M	Negative LVDS differential data output
14	A3P	Positive LVDS differential data output
15	GND	Ground
16		
17	A4M	Negative LVDS differential data output
18	A4P	Positive LVDS differential data output
19	A5M	Negative LVDS differential data output
20	A5P	Positive LVDS differential data output
21	A6M	Negative LVDS differential data output
22	A6P	Positive LVDS differential data output
23	GND	Ground
24		
25	A7M	Negative LVDS differential data output
26	A7P	Positive LVDS differential data output
27	N.C	Reserved
28		
29		
30		
31		

5.2 Open LDI Interface

- Receiver : NS DS90CF388

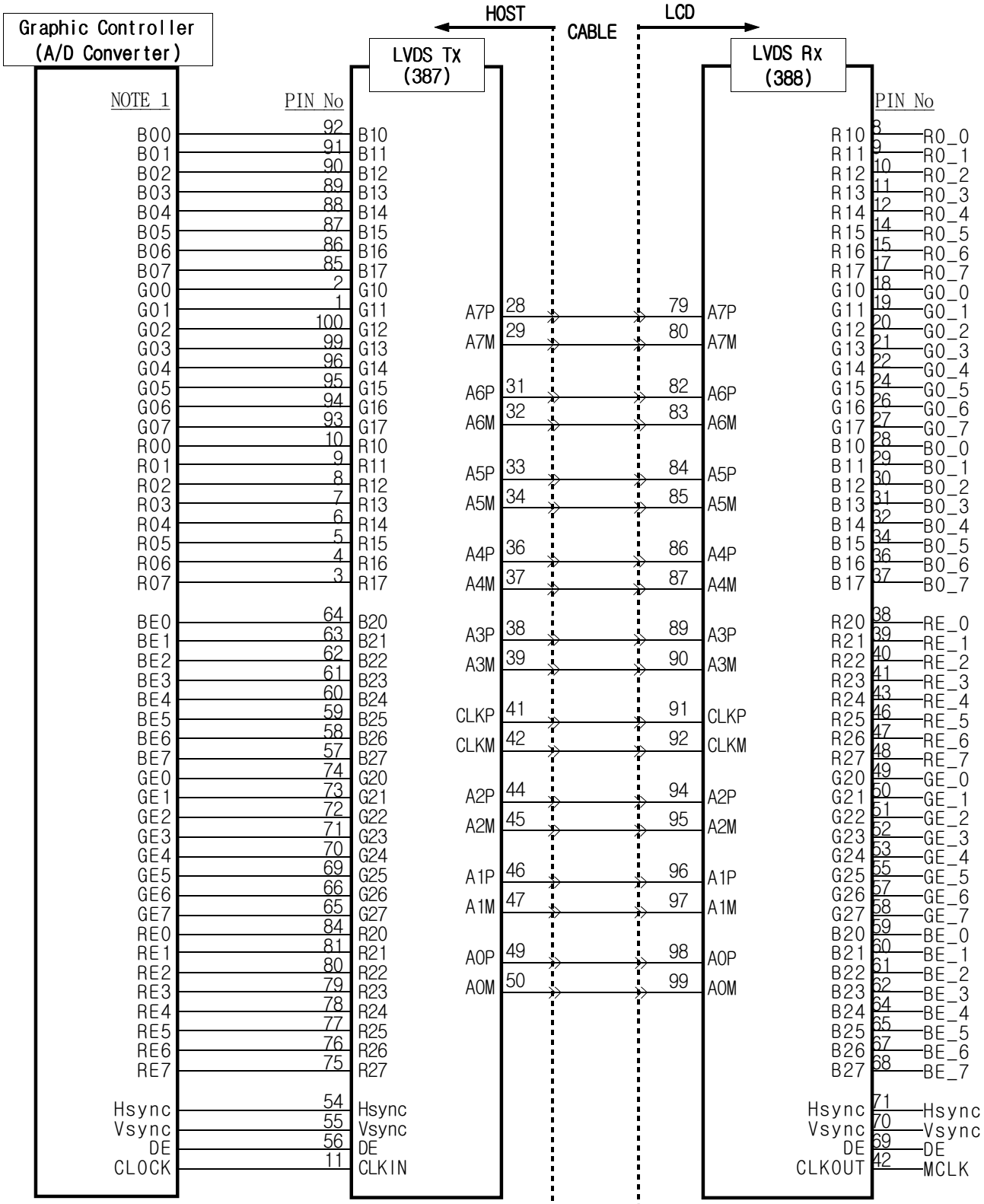

5.3 Input Power (Connector : Molex 53261-1290 (Matching Socket : 51021-1200))

Pin No	Symbol	Function
1	+5V	Module Input Vcc
2		
3		
4		
5		
6		
7	GND	Power Ground
8		
9		
10		
11		
12		

5.4 Back-light Unit (Connector: JST BHR-04VS-1, BHR-03VS-1)

PIN No.	INPUT [ch1] , [ch2]	Color	Function
3-1-1	HOT	Pink	High Voltage
3-1-2	N.C.	-	-
3-1-3	Cold	Black	Ground
3-2-1	HOT	Blue	High Voltage
3-2-2	N.C.	-	-
3-2-3	Cold	Yellow	Ground
3-3-1	HOT	White	High Voltage
3-3-2	N.C.	-	-
3-3-3			
3-3-4	Cold	White	Ground
4-1-1	HOT	Pink	High Voltage
4-1-2	N.C.	-	-
4-1-3	Cold	Black	Ground
4-2-1	HOT	Blue	High Voltage
4-2-2	N.C.	-	-
4-2-3	Cold	Yellow	Ground
4-3-1	HOT	White	High Voltage
4-3-2	N.C.	-	-
4-3-3			
4-3-4	Cold	White	Ground
Connector Part No.	JST BHR-03VS-1, JST BHR-04VS-1		

5.5 Input Signal,Basic Display Colors and Gray Scale of Each Color

COLOR	DISPLAY	DATA SIGNAL																								GRAY SCALE LEVEL
		RED								GREEN								BLUE								
		R0	R1	R2	R3	R4	R5	R6	R7	G0	G1	G2	G3	G4	G5	G6	G7	B0	B1	B2	B3	B4	B5	B6	B7	
BASIC COLOR	BLACK	0	0	0	0	0	0	0	0	0	0	0	0	0	0	0	0	0	0	0	0	0	0	0	0	-
	BLUE	0	0	0	0	0	0	0	0	0	0	0	0	0	0	0	0	1	1	1	1	1	1	1	1	-
	GREEN	0	0	0	0	0	0	0	0	1	1	1	1	1	1	1	1	0	0	0	0	0	0	0	0	-
	CYAN	0	0	0	0	0	0	0	0	1	1	1	1	1	1	1	1	1	1	1	1	1	1	1	1	-
	RED	1	1	1	1	1	1	1	1	0	0	0	0	0	0	0	0	0	0	0	0	0	0	0	0	-
	MAGENTA	1	1	1	1	1	1	1	1	0	0	0	0	0	0	0	0	1	1	1	1	1	1	1	1	-
	YELLOW	1	1	1	1	1	1	1	1	1	1	1	1	1	1	1	1	0	0	0	0	0	0	0	0	-
	WHITE	1	1	1	1	1	1	1	1	1	1	1	1	1	1	1	1	1	1	1	1	1	1	1	1	-
GRAY SCALE OF RED	BLACK	0	0	0	0	0	0	0	0	0	0	0	0	0	0	0	0	0	0	0	0	0	0	0	0	R0
	DARK	1	0	0	0	0	0	0	0	0	0	0	0	0	0	0	0	0	0	0	0	0	0	0	0	R1
	↑	0	1	0	0	0	0	0	0	0	0	0	0	0	0	0	0	0	0	0	0	0	0	0	0	R2
		:	:	:	:	:	:	:	:	:	:	:	:	:	:	:	:	:	:	:	:	:	:	:	:	R3~R252
		:	:	:	:	:	:	:	:	:	:	:	:	:	:	:	:	:	:	:	:	:	:	:	:	
	↓	1	0	1	1	1	1	1	1	0	0	0	0	0	0	0	0	0	0	0	0	0	0	0	0	R253
	LIGHT	0	1	1	1	1	1	1	1	0	0	0	0	0	0	0	0	0	0	0	0	0	0	0	0	R254
	RED	1	1	1	1	1	1	1	1	0	0	0	0	0	0	0	0	0	0	0	0	0	0	0	0	R255
GRAY SCALE OF GREEN	BLACK	0	0	0	0	0	0	0	0	0	0	0	0	0	0	0	0	0	0	0	0	0	0	0	0	G0
	DARK	0	0	0	0	0	0	0	0	1	0	0	0	0	0	0	0	0	0	0	0	0	0	0	0	G1
	↑	0	0	0	0	0	0	0	0	0	1	0	0	0	0	0	0	0	0	0	0	0	0	0	0	G2
		:	:	:	:	:	:	:	:	:	:	:	:	:	:	:	:	:	:	:	:	:	:	:	:	G3~G252
		:	:	:	:	:	:	:	:	:	:	:	:	:	:	:	:	:	:	:	:	:	:	:	:	
	↓	0	0	0	0	0	0	0	0	1	0	1	1	1	1	1	1	0	0	0	0	0	0	0	0	G253
	LIGHT	0	0	0	0	0	0	0	0	0	1	1	1	1	1	1	1	0	0	0	0	0	0	0	0	G254
	GREEN	0	0	0	0	0	0	0	0	1	1	1	1	1	1	1	1	0	0	0	0	0	0	0	0	G255
GRAY SCALE OF BLUE	BLACK	0	0	0	0	0	0	0	0	0	0	0	0	0	0	0	0	0	0	0	0	0	0	0	0	B0
	DARK	0	0	0	0	0	0	0	0	0	0	0	0	0	0	0	0	1	0	0	0	0	0	0	0	B1
	↑	0	0	0	0	0	0	0	0	0	0	0	0	0	0	0	0	0	1	0	0	0	0	0	0	B2
		:	:	:	:	:	:	:	:	:	:	:	:	:	:	:	:	:	:	:	:	:	:	:	:	B3~B252
		:	:	:	:	:	:	:	:	:	:	:	:	:	:	:	:	:	:	:	:	:	:	:	:	
	↓	0	0	0	0	0	0	0	0	0	0	0	0	0	0	0	0	1	0	1	1	1	1	1	1	B253
	LIGHT	0	0	0	0	0	0	0	0	0	0	0	0	0	0	0	0	0	1	1	1	1	1	1	1	B254
	BLUE	0	0	0	0	0	0	0	0	0	0	0	0	0	0	0	0	1	1	1	1	1	1	1	1	B255

Note) Definition of Gray :

Rn : Red Gray, Gn : Green Gray, Bn : Blue Gray (n = Gray level)

Input Signal : 0 = Low level voltage, 1 = High level voltage

6. Interface Timing

6.1 Timing Parameters (DE only mode)

SIGNAL	ITEM	SYMBOL	MIN.	TYP.	MAX.	UNIT	NOTE
Clock	Frequency	1/Tc	62	81	82	MHz	(2)
	Hgh Time	TCH	2	-	-	nsec	
	Low Time	TCL	2	-	-	nsec	
Data	Setup Time	TDS	2	-	-	nsec	
	Hold Time	TDH	2	-	-	nsec	
Data Enable	Setup Time	TES	2	-	-	nsec	
Frame Frequency	Cycle	Tv	-	16.7	16.7	msec	
			1208	1250	1250	lines	
Vertical Active Disply Term	Display Period	TVD	1200	1200	1200	lines	
	Verticle Blank Period	TVB	8	-	50	lines	
One Line Scanning Time	Cycle	TH	900	1080	1090	clocks	2pixel/clock
Horizontal Active Display Term	Display Period	THD	800	800	800	clocks	

Note 1) Test Point : TTL control signal and CLK at LVDS Tx input terminal in system
2) Internal Vcc = 3.08V

* Interfacing timing check point

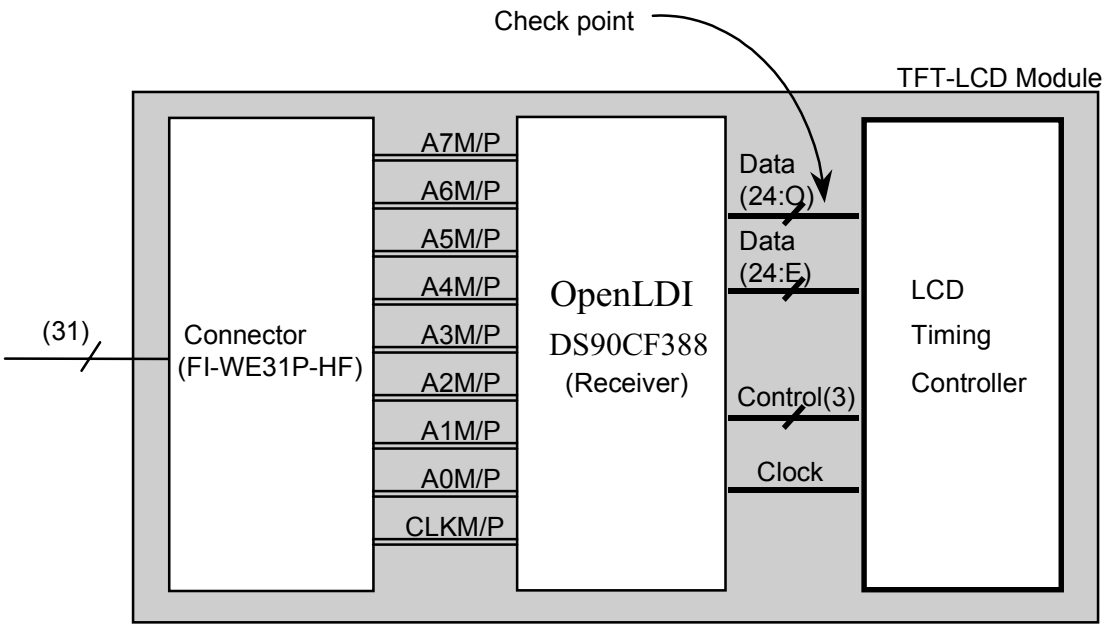

6.2 Timing diagrams of interface signal (DE only mode)

[Horizontal Timing]

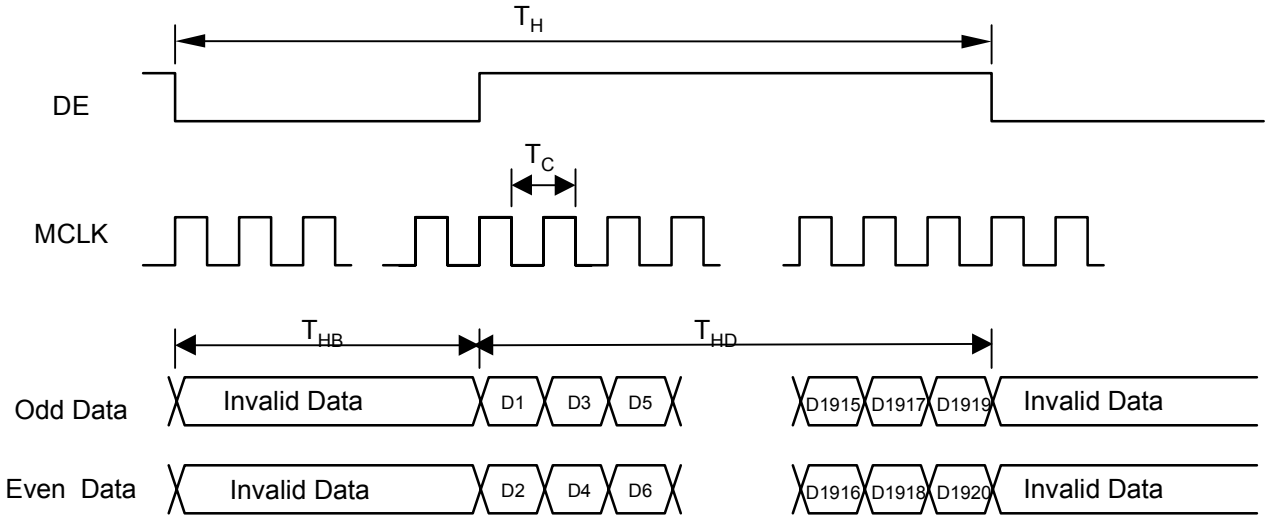

[Vertical Timing]

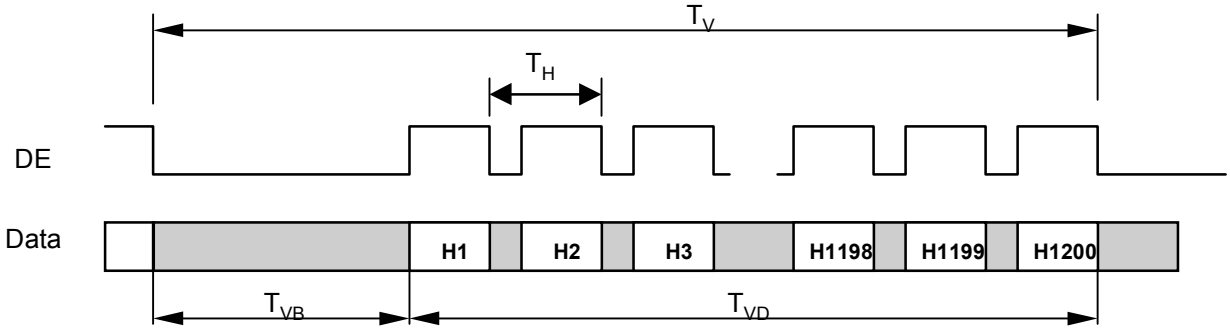

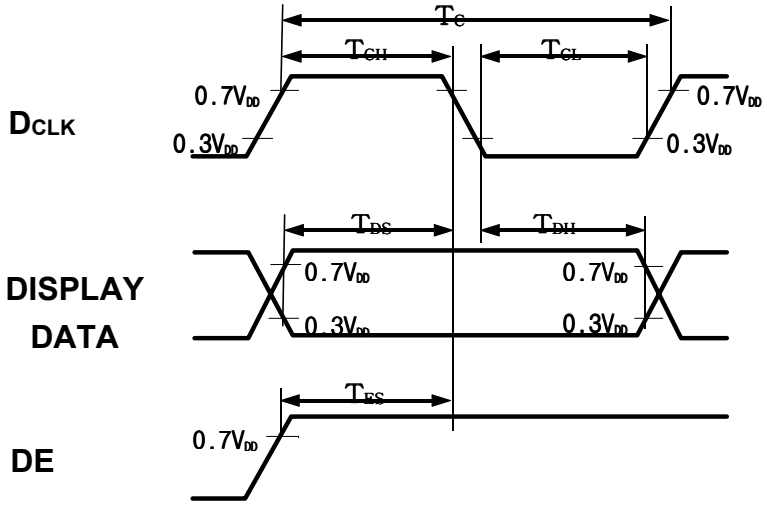

6.3 Power ON/OFF Sequence

: To prevent a latch-up or DC operation of the LCD module, the power on/off sequence should be as the diagram below.

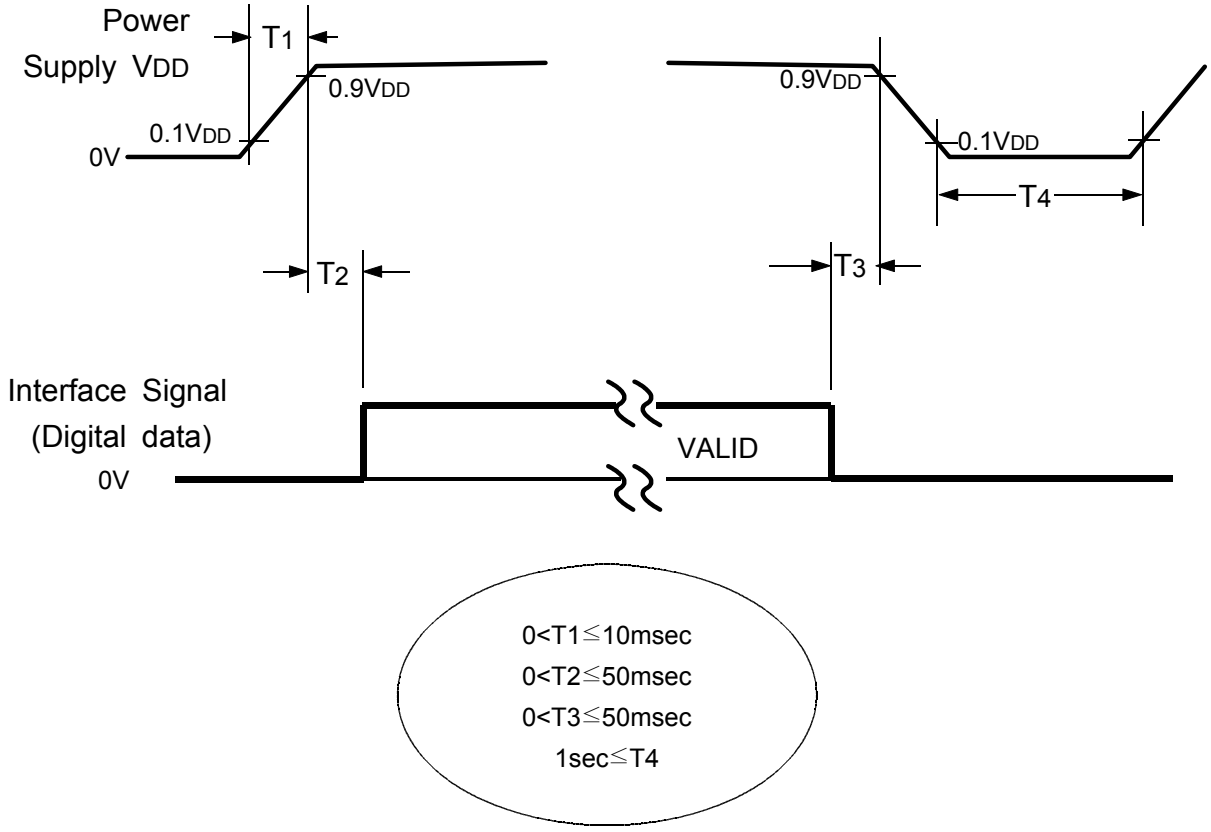

Power ON/OFF Sequence

NOTE.

(1)The supply voltage of the external system for the module input should be the same as the definition of VDD.

(2) Apply the lamp voltage within the LCD operation range. When the back-light turns on before the LCD operation or the LCD turns off before the back-light turns off, the display may momentarily become abnormal screen.

(3) In case of VDD = off level, please keep the level of input signals on the low or keep a high impedance.

(4) T4 should be measured after the module has been fully discharged between power off and on period.

(5) Interface signal shall not be kept at high impedance when the power is on.
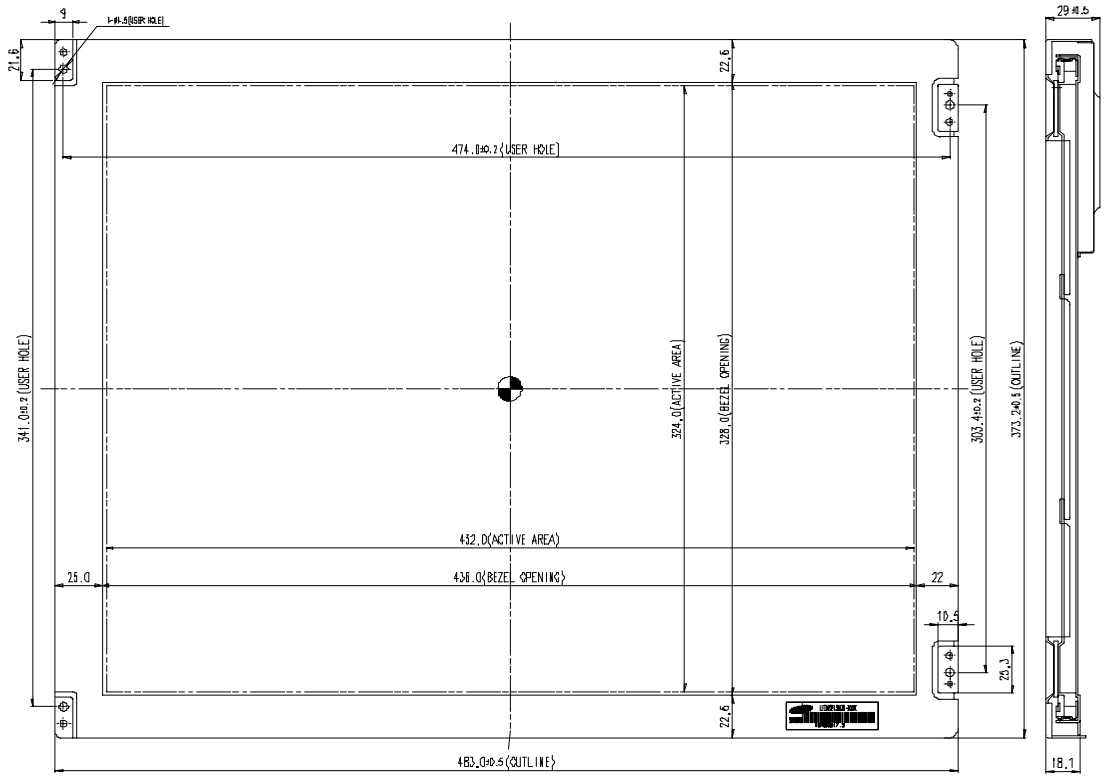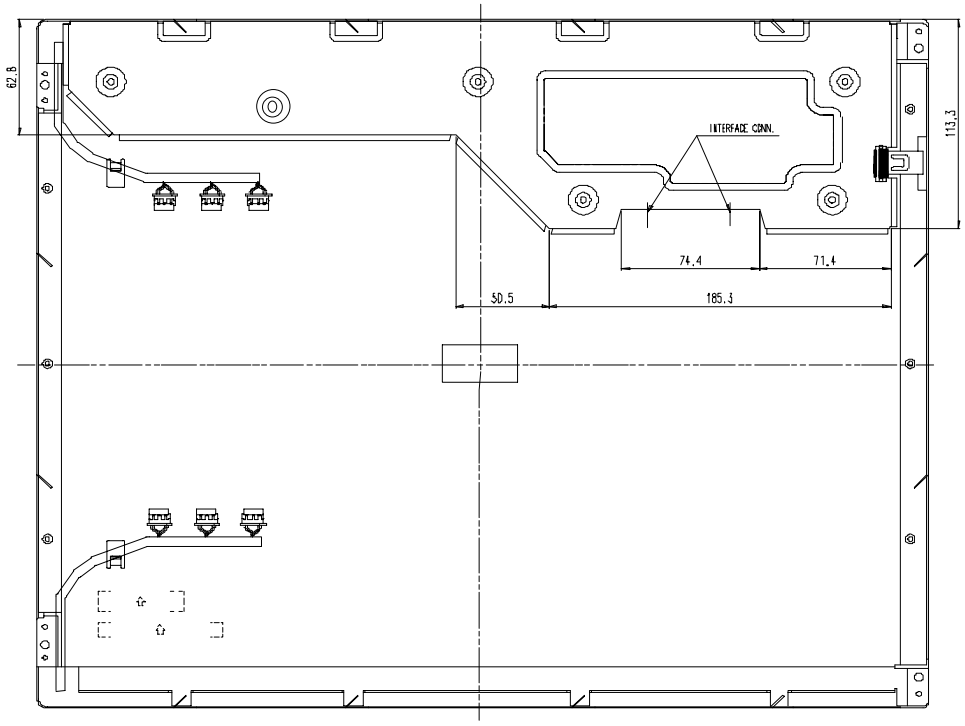
7. Outline Dimension(2000.01.03. Rev. 01)