SAMSUNG ELECTRONICS

Approval

LEAD-FREE

DATE : Feb. 06, 2012

SAMSUNG TFT-LCD

MODEL NO. : LTN089AL03

NOTE : Surface type [**Anti-Glare**]

Application engineering part, LCD Division
Samsung Electronics Co., Ltd.

Samsung Confidential

Approval

CONTENTS

Revision History ---------- (3)

General Description ---------- (4)

1. Absolute Maximum Ratings ---------- (5)
   1.1 Absolute Ratings of environment
   1.2 Electrical Absolute Ratings

2. Optical Characteristics ---------- (7)

3. Electrical Characteristics ---------- (10)
   3.1 TFT LCD Module
   3.2 Backlight Unit
   3.3 LED Driver

4. Block Diagram ---------- (12)
   4.1 TFT LCD Module
   4.2 LED BLU

5. Input Terminal Pin Assignment ---------- (13)
   5.1 Input Signal & Power
   5.2 LVDS Interface
   5.3 Input Signals, Basic Display Colors and Gray Scale of Each Color.
   5.4 Pixel format

6. Interface Timing
   6.1 Timing Parameters ---------- (18)
   6.2 Timing Diagrams of interface Signal
   6.3 Power ON/OFF Sequence

7. Outline Dimension
   ---------- (20)

8. Packing
   ---------- (21)

9. Markings & Others
   ---------- (22)

10. General Precautions
   ---------- (23)

Samsung Confidential

REVISION HISTORY

Approval

Version	Date	Page (New)	Section	Description
A00	Mar. 29, 2012	All	All	The approval specification of LTN089AL03 was issued first.

Samsung Confidential

GENERAL DESCRIPTION

DESCRIPTION

LTN089AL03 is a color active matrix TFT (Thin Film Transistor) liquid crystal display (LCD) that uses amorphous silicon TFT as switching devices. This model is composed of a TFT LCD panel, a driver circuit and a backlight system. The resolution of a 8.9" contains 800 x 1280 pixels and can display up to 16.2 Mega colors (6bit + FRC).

FEATURES

- 800 x 1280 pixels resolution (16:10)
- Fast Response Time , Wide viewing angle
- Low power consumption
- LED BLU Structure
- DE (Data enable) only mode
- 3.7V input, LVDS Interface
- RoHS compliance

APPLICATIONS

- Notebook PC , Tablet PC
- If the usage of this product is not for NPC, Tablet application, please contact SEC

GENERAL INFORMATION

Item	Specification	Unit	Note
Display area	120.0 (H) x 192.0 (V) (8.9”diagonal)	mm	
Display colors	16,777,216 (8bit)		6bit + FRC
Resolution	800 x1280	pixel	10 : 16
Pixel arrangement	RGB vertical stripe		
Pixel pitch	0.150 (H) x 0.150 (V)	mm	
Display Mode	Normally black , PLS Mode		
Surface treatment	CF : Anti-Glare / TFT : APCF		Haze : 22%±5%

Mechanical Information

ITEM		MIN.	TYP.	MAX.	UNIT	비 고
OUTLINE	X	129.35	129.5	129.65	mm	(1)
	Y	202.4	202.55	202.7	mm	(1)
Z		2.19	2.34	2.49	mm	(1)
Weight		-	93	99	g	

Note (1) Measurement condition of outline dimension

. X-Y Dimension : Vernier Calipers , 300g.f push force

. Z Dimension : Height gate , 150g.f push force

1. ABSOLUTE MAXIMUM RATINGS

1.1 ENVIRONMENTAL ABSOLUTE RATINGS

Item	Symbol	Min.	Max.	Unit	Note
Storage temperate	TSTG	-20	60	°C	(1)
Operating temperate (Temperature of glass surface)	TOPR	0	50	°C	(1)

Note (1) Temperature and relative humidity range are shown in the figure below.
95 % RH Max. (40 °C ≥ Ta)
Maximum wet - bulb temperature at 39 °C or less. (Ta > 40 °C) No condensation

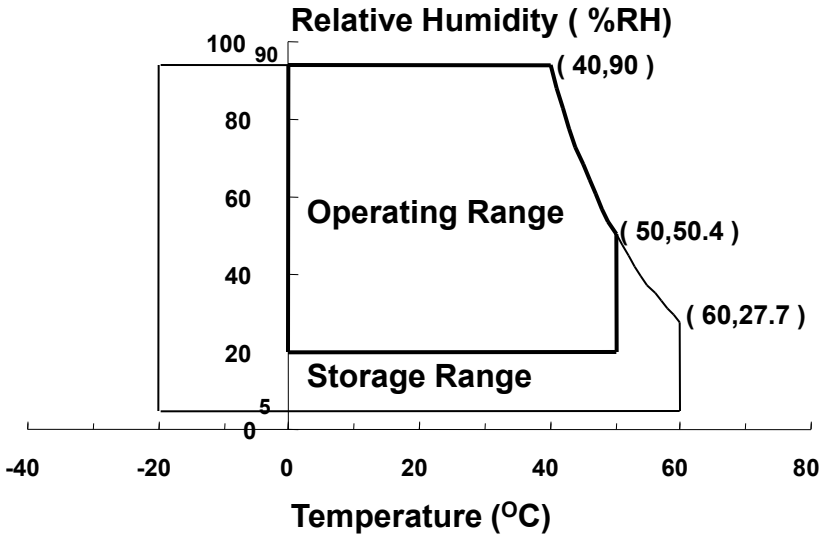

1.2 ELECTRICAL ABSOLUTE RATINGS

(1) TFT LCD MODULE

Item	Symbol	Min.	Max.	Unit	Note
Power Supply Voltage	V_{CC}	- 0.3	5	V	(1)
LED current	I_{LED}	-	35	mA	(2)

Note (1) Within Ta (25 ± 2 °C)
(2) Per 1Ch.

1.3 RECOMMENDED STORAGE CONDITION

Item	Unit	Min.	Max.
Storage temperate	(˚C)	5	40
Storage humidity	(%rH)	35	75
Storage life	12 months		
Storage Condition	-. Prohibit direct sunlight -. Ventilation in storehouse and Control changing temperature is within limits of environment -. Put it on pallet, don't put it on floor. and store them with removing form wall. -. Don't wet Out-BOX and avoid rain. -. Without condensation. -. Etc. Avoid harmful Condition.		

1.4 LONG-TERM STORAGE PRODUCT PROCESS

More than 3months Storage or Low temp. Delivery/under 5˚C Storage
→ On the 20˚C 50%rH Condition , More than 10hr release

2. OPTICAL CHARACTERISTICS

The following items are measured under stable conditions. The optical characteristics should be measured in a dark room or equivalent state.

* Ta = 25 ± 2 °C, V_{CC}=3.7V, fv= 60Hz, f_{DCLK} = 74.66 MHz, I_{LED} = 19.5 mA

Item		Symbol	Condition	Min.	Typ.	M-ax	Unit	Note
Contrast Ratio		CR	Normal Viewing Angle $\phi = 0$ $\theta = 0$	720	900	-	-	-
Response Time at Ta (Rising + Falling)		T_{RT}		-	30	45	msec	Note (1), (2)
Average Luminance of White (Center)		$Y_{L,AVE}$		320	400	-	cd/m^2	
Color Temperature		T		6000		8000	K	CA-210
Uniformity (9 points)				80	-	-	%	Note(4)
Color Gamut		-		50	55	-	%	-
Color Chromaticity (CIE)	Red	R_X		Typ -0.03	0.615	Typ +0.03	-	CA-210
		R_Y			0.361			
	Green	G_X			0.304			
		G_Y			0.601			
	Blue	B_X			0.150			
		B_Y			0.141			
	White	W_X			0.302			
		W_Y			0.335			
Viewing Angle	Hor.	θ_L	CR ≥ 10	-	80	-	Degrees	Note (1), (3)
		θ_H		-	80	-		
	Ver.	ϕ_H		-	80	-		
		ϕ_L		-	80	-		

Samsung Confidential

Note 1) Definition of Viewing Angle : Viewing angle range(10 ≤ C/R)

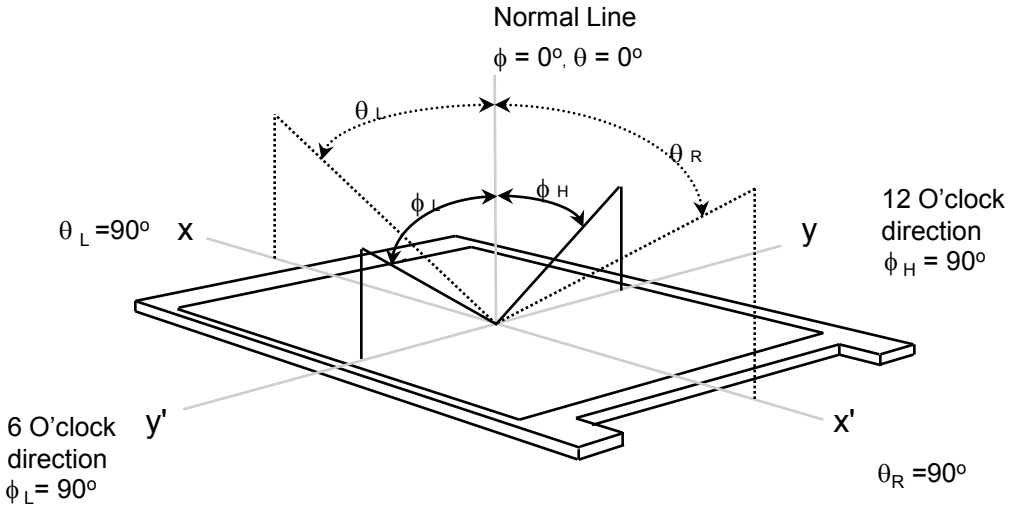

Note 2) Definition of Response time :

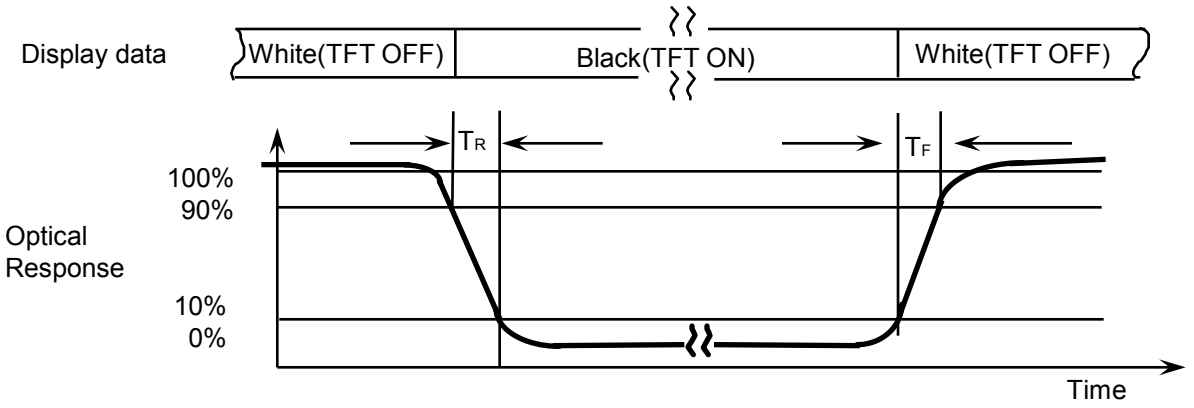

Note 3) After stabilizing and leaving the panel alone at a given temperature for 30 min , the measurement should be executed. Measurement should be executed in a stable, windless and dark room. 30 min after lighting the backlight. This should be measured in the center of screen.
Environment condition : Ta = 25 ± 2 °C

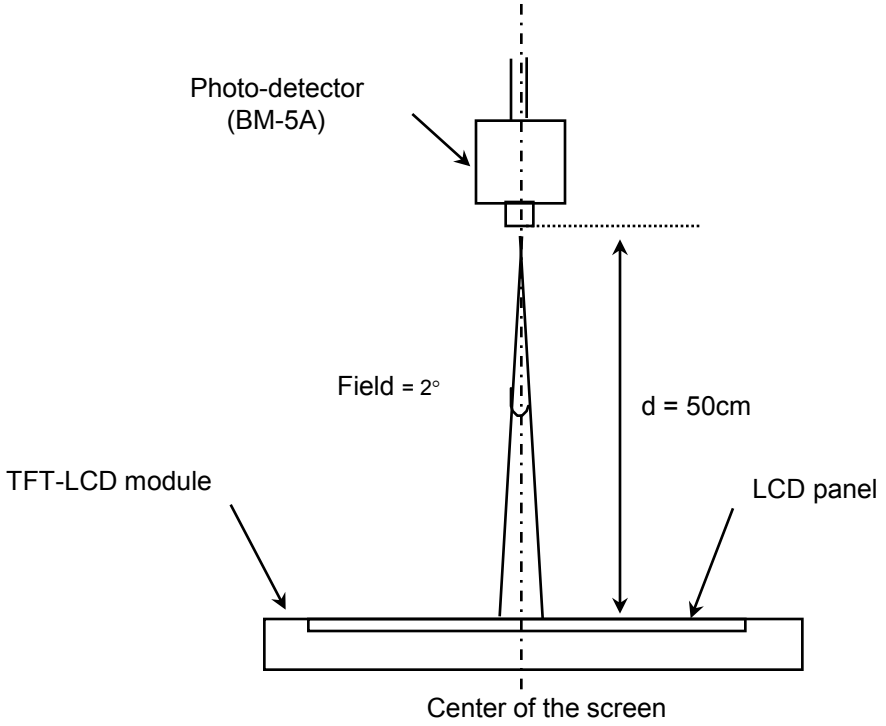

[Optical characteristics measurement setup]

Note 4) Definition of 9 points white variation (δ)

$$\delta_L = \frac{\text{Maximum luminance of 9 points}}{\text{Minimum luminance of 9 points}}$$

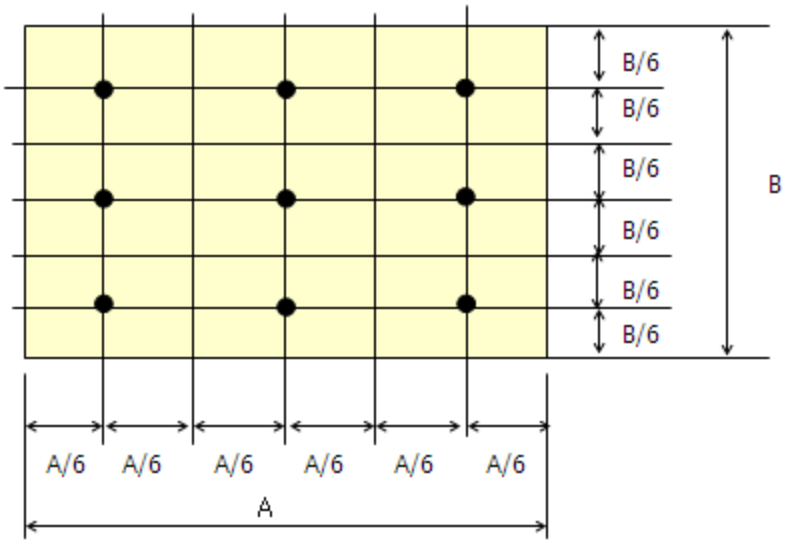

3. ELECTRICAL CHARACTERISTICS

3.1 TFT LCD MODULE

(Ta= 25 ± 2°C)

Item		Symbol	Min.	Typ.	Max.	Unit	Note
Voltage of Power Supply		V_{CC}	3.4	3.7	4.0	V	
Current of Power Supply	Panel	I_{DD}	-	0.71	0.78	W	(2),(3)
	Total		-	2.88	3.17	W	(2),(3)(4)
Differential Input Threshold Voltage	High	V_{IH}	-	-	+100	mV	V_{CM} = 1.2V
	Low	V_{IL}	-100	-	-	mV	
Vsync Frequency		fv	-	60	-	Hz	-
Main Frequency		f_{DCLK}	-	74.66	-	MHz	-
Rush Current		I_{RUSH}	-	-	1.5	A	(4)

Note (1) Display data pins and timing signal pins should be connected.(GND = 0V)

(2) f_V = 60Hz, f_{DCLK} = 74.66MHZ, V_{CC} = 3.7V , DC Current.

(3) Power dissipation pattern

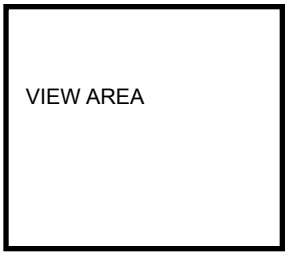

(White Pattern)

(4) Total Power consumption : Panel + BLU(With Driver) @ 85% Dimming

(5) Rush current measurement condition (V_{CC} Rising time = 470 us

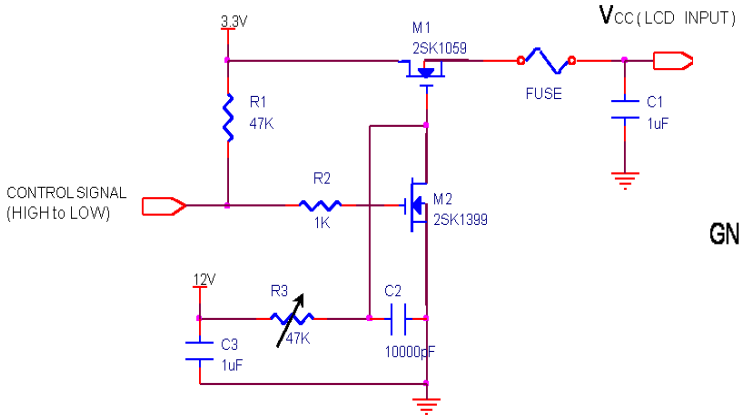

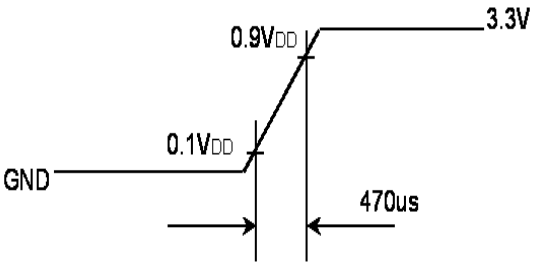

VCC rising time is 470us

3.2 BACK-LIGHT UNIT

Ta= 25 ± 2 °C

Item	Symbol	Min.	Typ.	Max.	Unit	Note
LED Forward Voltage	Vf	2.8	2.9	3.0	V	(1)
LED Forward Current	If	-	19.5	-	mA	-
BLU Power Consumption (Without LED Driver)	-	-	1.697	1.866	W	(3)
BLU Power Consumption (With LED Driver Board)	-	-	2.17	2.39	W	(4)
LED Array	-	-	30	-	EA	(2)
LED Luminance	-	2300	2400	2500	mcd	(1)

Note (1) If = 20mA

(2) 5EA x 6ch = 30EA

(3) LED Forward Volgate x LED number x LED Current

→ 2.9(V) x 0.0200(A) x 30ea = 1.697W

(4) Power measured with SEC's LED Driver board V1.0

(PWM duty 85%, PWM frequency 10Khz, LED current is 19.5mA)

4. BLOCK DIAGRAM

4.1 TFT LCD MODULE

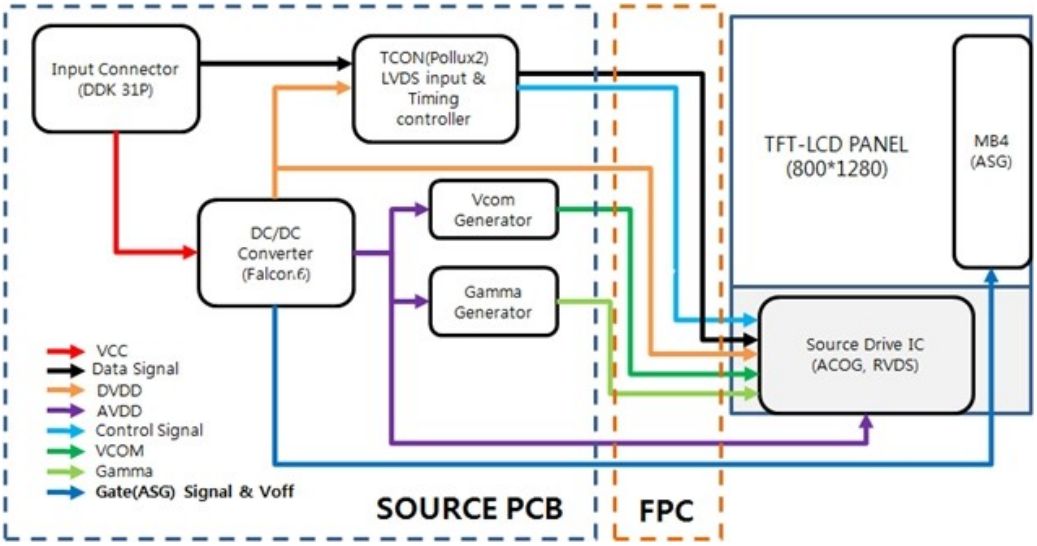

4.2 BACKLIGHT UNIT

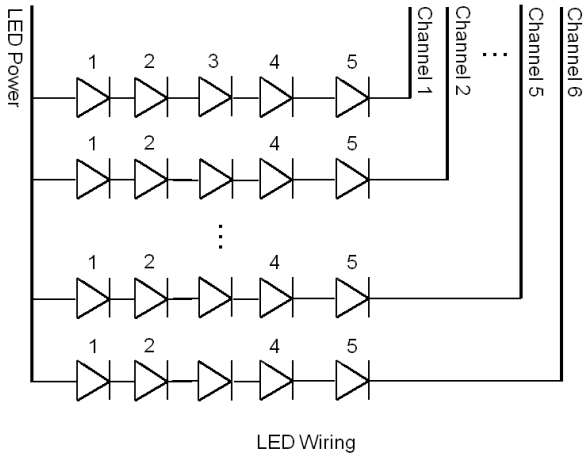

LED Wiring

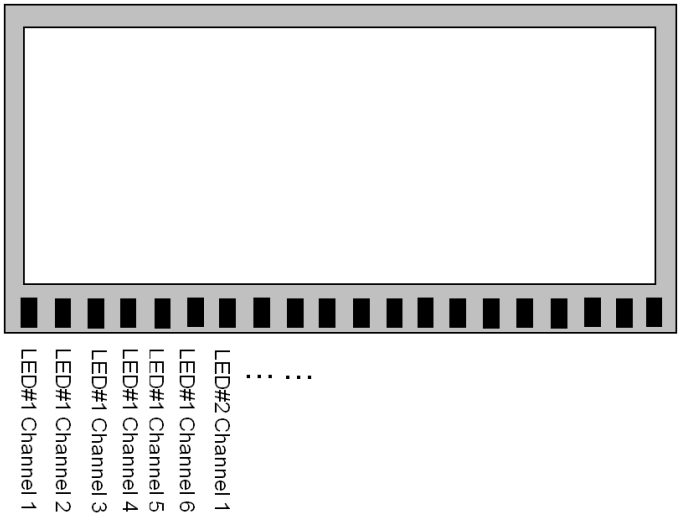

LED Placement

5. INPUT TERMINAL PIN ASSIGNMENT

5.1. Input Signal & Power (LVDS, Connector : DDK 31PIN)

PIN #	Symbol	Description
1	VDD	Power Supply +3.7V
2	VDD	Power Supply +3.7V
3	VDD	Power Supply +3.7V
4	ID_CHK	1.25V
5	NC	NO CONNECT
6	VSS	Ground
7	RxOIN0-	-LVDS Differential Data
8	RxOIN0+	+LVDS Differential Data
9	VSS	Ground
10	RxOIN1-	-LVDS Differential Data
11	RxOIN1+	+LVDS Differential Data
12	VSS	Ground
13	RxOIN2-	-LVDS Differential CLK
14	RxOIN2+	+LVDS Differential CLK
15	VSS	Ground
16	RxOCKIN-	-LVDS Differential CLK
17	RxOCKIN+	+LVDS Differential CLK
18	VSS	Ground
19	RxOIN3-	-LVDS Differential Data
20	RxOIN3+	+LVDS Differential Data
21	VSS	Ground
22	FB1	Feedback1
23	FB2	Feedback2
24	FB3	Feedback3
25	FB4	Feedback4
26	FB5	Feedback5
27	FB6	Feedback6
28	NC	NO CONNECT
29	VLED	BLU VCC
30	VLED	BLU VCC
31	VLED	BLU VCC

Samsung Confidential

5.2 LVDS Interface

5.2.1 DC Electric Characteristics of LVDS over recommended operating conditions

Parameter	Symbol	Condition	Min.	Typ.	Max.	Unit
Differential input high threshold voltage	V_{TH}	V_{CM} = 1.2V	-	-	+100	mV
Differential input low threshold voltage	V_{TL}	V_{CM} = 1.2V	-100	-	-	mV
Differential input voltage	$\|V_{ID}\|$	-	100	-	600	mV
Common mode voltage	V_{CM}	-	0.2	-	2.2	V

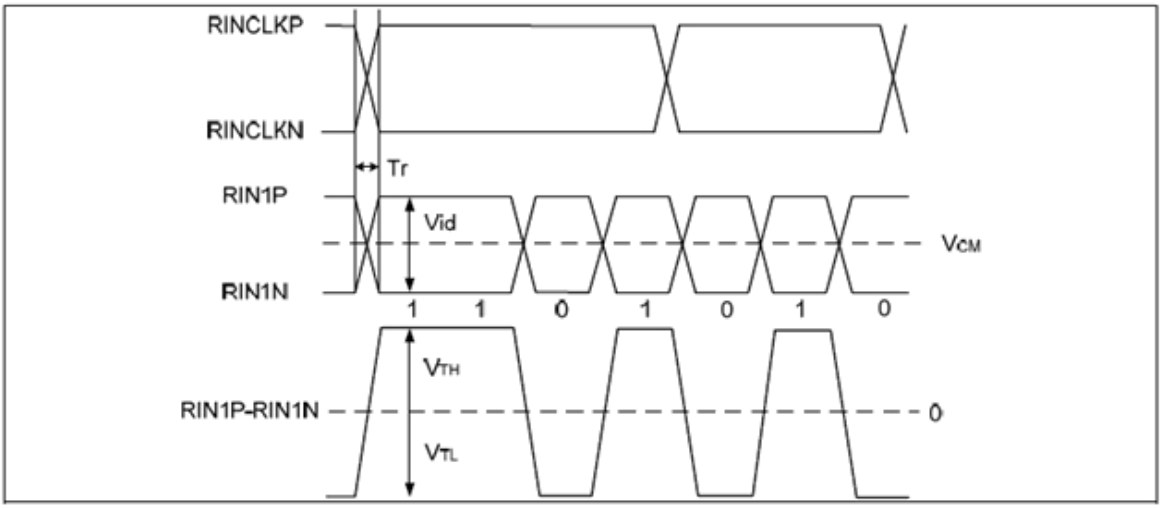

Figure 2-1 Definition of LVDS receiver Input Characteristics

5.2.2 AC Electric Characteristics of LVDS over recommended operating conditions

ITEM	SYMBOL	MIN.	TYP.	MAX.	UNIT	NOTE
LVDS input clock frequency	F_{CLK_LVDS}	20	-	100	MHz	
RIN skew right margin	RSRM	-	-	0.25	UI	(1),(2)
RIN skew left margin	RSLM	-0.25	-	-	UI	(1),(2)

Note (1) 1UI = 1.7857ns @ 80MHz (LVDS Rx. clock frequency is 80MHz => Data Rate is 560Nbps => 1UI is 1.7857ns)

(2) LVDS Input Skew Margin

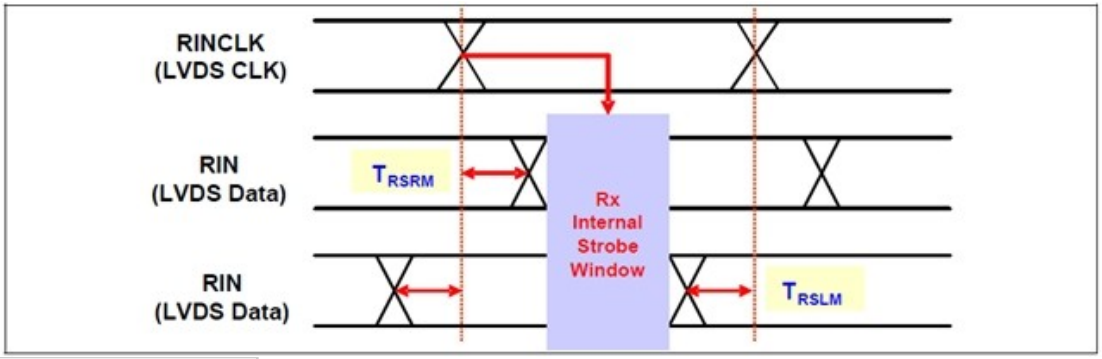

5.2.3 LVDS Inputs

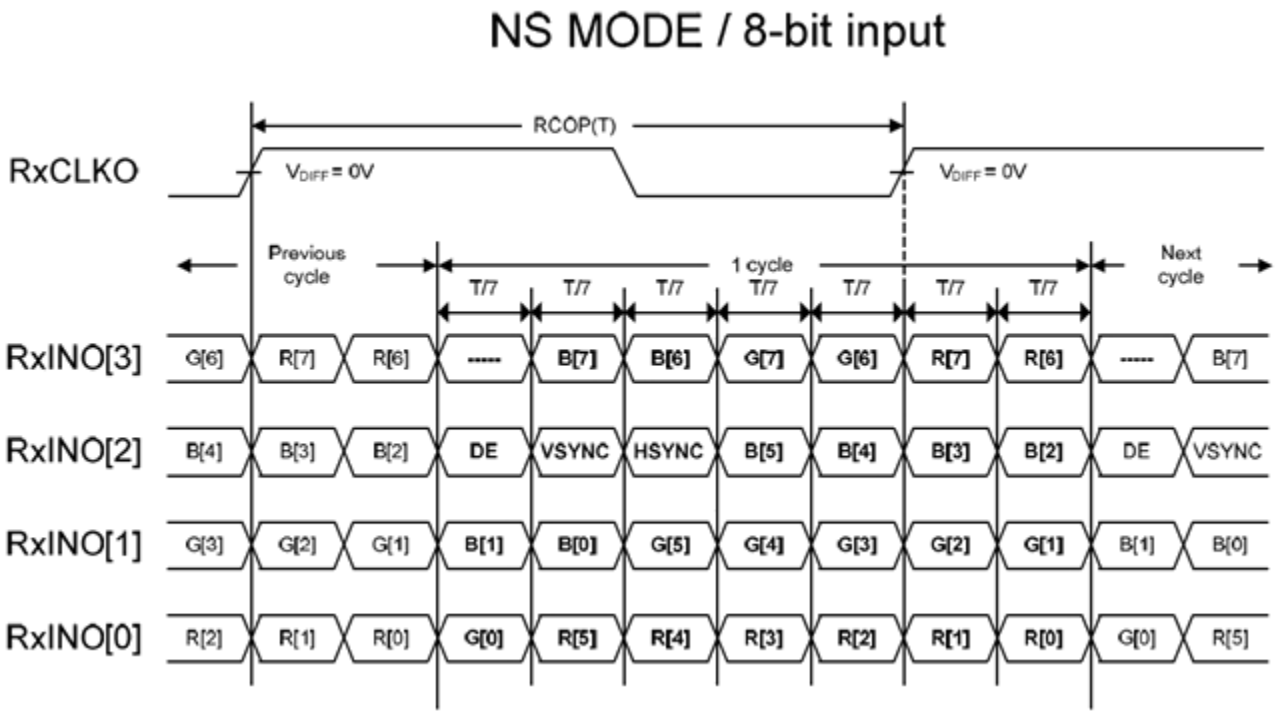

5.3 Input Signals, Basic Display Colors and Gray Scale of Each Color

COLOR	DISPLAY	DATA SIGNAL																								GRAY SCALE LEVEL
		RED								GREEN								BLUE								
		R0	R1	R2	R3	R4	R5	R6	R7	G0	G1	G2	G3	G4	G5	G6	G7	B0	B1	B2	B3	B4	B5	B6	B7	
BASIC COLOR	BLACK	0	0	0	0	0	0	0	0	0	0	0	0	0	0	0	0	0	0	0	0	0	0	0	0	-
	BLUE	0	0	0	0	0	0	0	0	0	0	0	0	0	0	0	0	1	1	1	1	1	1	1	1	-
	GREEN	0	0	0	0	0	0	0	0	1	1	1	1	1	1	1	1	0	0	0	0	0	0	0	0	-
	CYAN	0	0	0	0	0	0	0	0	1	1	1	1	1	1	1	1	1	1	1	1	1	1	1	1	-
	RED	1	1	1	1	1	1	1	1	0	0	0	0	0	0	0	0	0	0	0	0	0	0	0	0	-
	MAGENTA	1	1	1	1	1	1	1	1	0	0	0	0	0	0	0	0	1	1	1	1	1	1	1	1	-
	YELLOW	1	1	1	1	1	1	1	1	1	1	1	1	1	1	1	1	0	0	0	0	0	0	0	0	-
	WHITE	1	1	1	1	1	1	1	1	1	1	1	1	1	1	1	1	1	1	1	1	1	1	1	1	-
GRAY SCALE OF RED	BLACK	0	0	0	0	0	0	0	0	0	0	0	0	0	0	0	0	0	0	0	0	0	0	0	0	R0
	DARK ↑	1	0	0	0	0	0	0	0	0	0	0	0	0	0	0	0	0	0	0	0	0	0	0	0	R1
		0	1	0	0	0	0	0	0	0	0	0	0	0	0	0	0	0	0	0	0	0	0	0	0	R2
		:	:	:	:	:	:	:	:	:	:	:	:	:	:	:	:	:	:	:	:	:	:	:	:	R3~ R252
		:	:	:	:	:	:	:	:	:	:	:	:	:	:	:	:	:	:	:	:	:	:	:	:	
	↓ LIGHT	1	0	1	1	1	1	1	1	0	0	0	0	0	0	0	0	0	0	0	0	0	0	0	0	R253
		0	1	1	1	1	1	1	1	0	0	0	0	0	0	0	0	0	0	0	0	0	0	0	0	R254
	RED	1	1	1	1	1	1	1	1	0	0	0	0	0	0	0	0	0	0	0	0	0	0	0	0	R255
GRAY SCALE OF GREEN	BLACK	0	0	0	0	0	0	0	0	0	0	0	0	0	0	0	0	0	0	0	0	0	0	0	0	G0
	DARK ↑	0	0	0	0	0	0	0	0	1	0	0	0	0	0	0	0	0	0	0	0	0	0	0	0	G1
		0	0	0	0	0	0	0	0	0	1	0	0	0	0	0	0	0	0	0	0	0	0	0	0	G2
		:	:	:	:	:	:	:	:	:	:	:	:	:	:	:	:	:	:	:	:	:	:	:	:	G3~ G252
		:	:	:	:	:	:	:	:	:	:	:	:	:	:	:	:	:	:	:	:	:	:	:	:	
	↓ LIGHT	0	0	0	0	0	0	0	0	1	0	1	1	1	1	1	1	0	0	0	0	0	0	0	0	G253
		0	0	0	0	0	0	0	0	0	1	1	1	1	1	1	1	0	0	0	0	0	0	0	0	G254
	GREEN	0	0	0	0	0	0	0	0	1	1	1	1	1	1	1	1	0	0	0	0	0	0	0	0	G255
GRAY SCALE OF BLUE	BLACK	0	0	0	0	0	0	0	0	0	0	0	0	0	0	0	0	0	0	0	0	0	0	0	0	B0
	DARK ↑	0	0	0	0	0	0	0	0	0	0	0	0	0	0	0	0	1	0	0	0	0	0	0	0	B1
		0	0	0	0	0	0	0	0	0	0	0	0	0	0	0	0	0	1	0	0	0	0	0	0	B2
		:	:	:	:	:	:	:	:	:	:	:	:	:	:	:	:	:	:	:	:	:	:	:	:	B3~ B252
		:	:	:	:	:	:	:	:	:	:	:	:	:	:	:	:	:	:	:	:	:	:	:	:	
	↓ LIGHT	0	0	0	0	0	0	0	0	0	0	0	0	0	0	0	0	1	0	1	1	1	1	1	1	B253
		0	0	0	0	0	0	0	0	0	0	0	0	0	0	0	0	0	1	1	1	1	1	1	1	B254
	BLUE	0	0	0	0	0	0	0	0	0	0	0	0	0	0	0	0	1	1	1	1	1	1	1	1	B255

Note 1) Definition of gray :
Rn: Red gray, Gn: Green gray, Bn: Blue gray (n=gray level)
Note 2) Input signal: 0 =Low level voltage, 1=High level voltage

Samsung Confidential

5.4 Pixel Format in the display

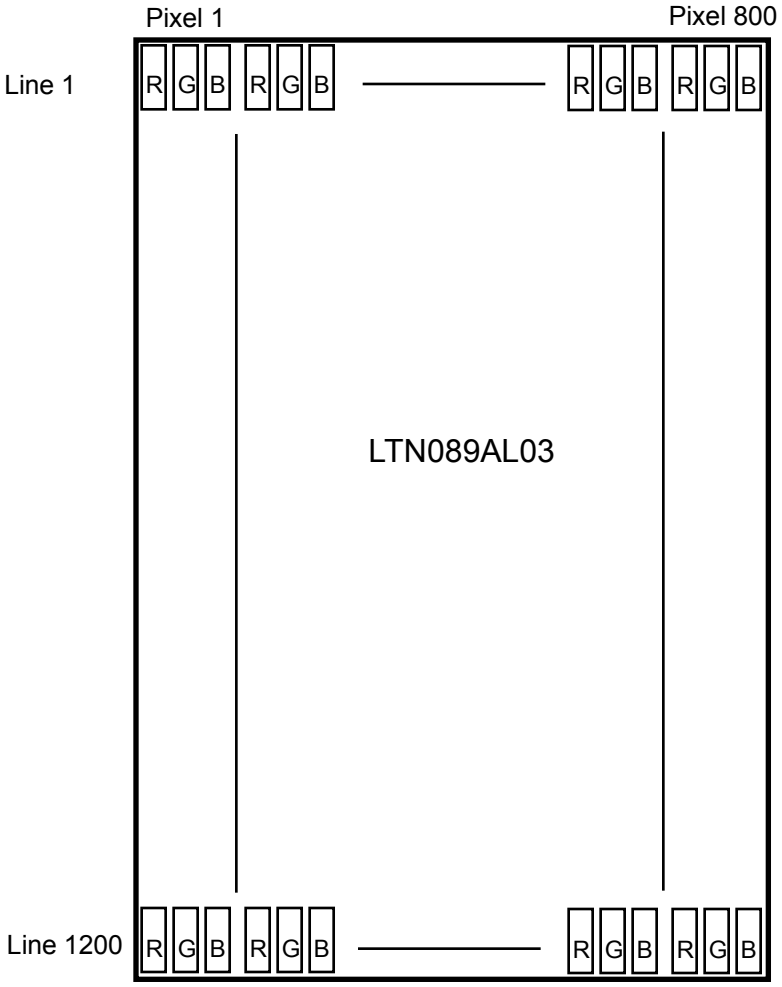

6. INTERFACE TIMING

6.1 Timing Parameters (DE Only Mode)

SIGNAL	ITEM	SYMBOL	MIN.	TYP.	MAX.	UNIT	NOTE
Frame Frequency	Cycle	f_V		60		Hz	
		T_V		1299		lines	(1)
Vertical Active Disply Term	Display Period	T_{VD}	-	1280	-	lines	
	Verticle Blank Period	T_{VB}	-	19	-	lines	(1)
One Line Scanning Time	Cycle	T_H		954		clocks	(1)
Horizontal Active Display Term	Display Period	T_{HD}	-	800	-	clocks	(1)
		T_{HB}	-	154	-	pixels	
Main CLK Freq.	Cycle	$1/T_C$	-	74.66	100	MHz	

Note (1) The value of (T_V + T_H) * f_V cannot exceed MAX value of Main CLK Freq.

6.2 Timing diagrams of interface signal

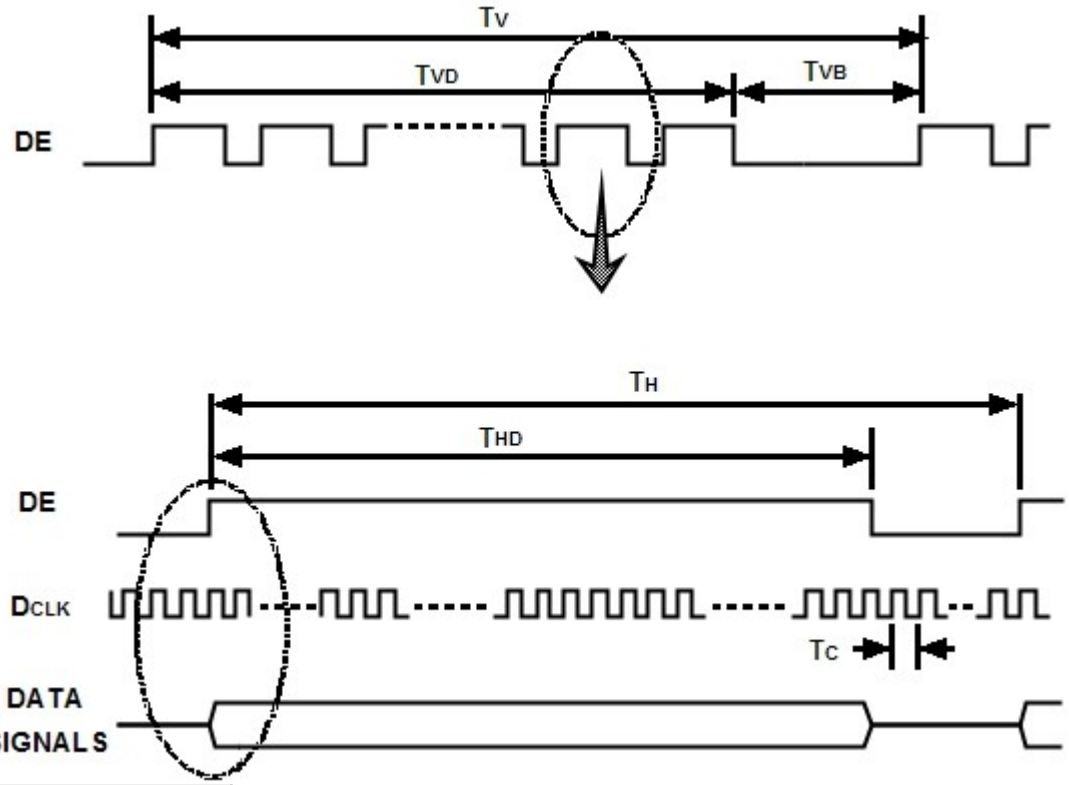

Samsung Confidential

6.3 Power ON/OFF Sequence

: To prevent a latch-up or DC operation of the LCD module, the power on/off sequence should be as the diagram below.

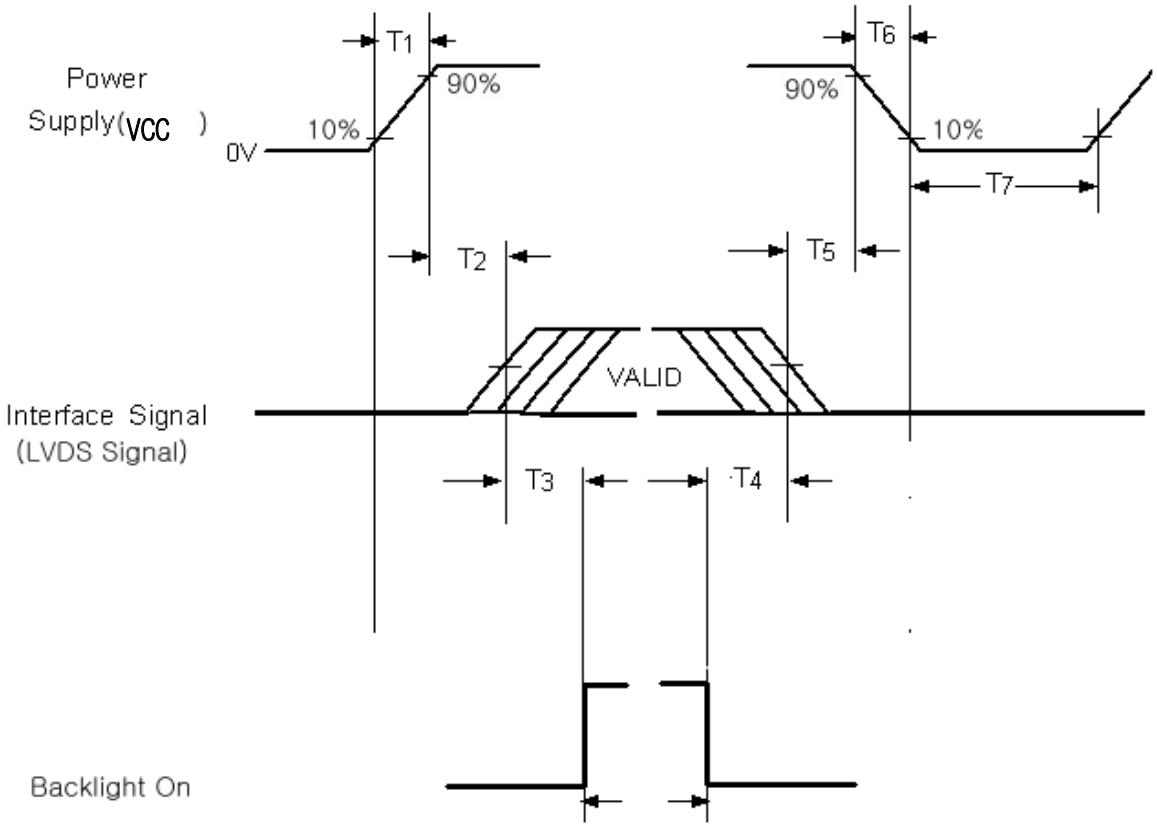

ITEM	Spec(unit: msec)
T1	0.5≤T1≤10
T2	0.5≤T2≤50
T3	300≤T3
T4	200≤T4
T5	0.5≤T5≤50
T6	0≤T6≤10
T7	500≤T1

Note : Backlight may flash if interface signal remains floating state at invalid period.

7. MECHANICAL OUTLINE DIMENSION

Approval

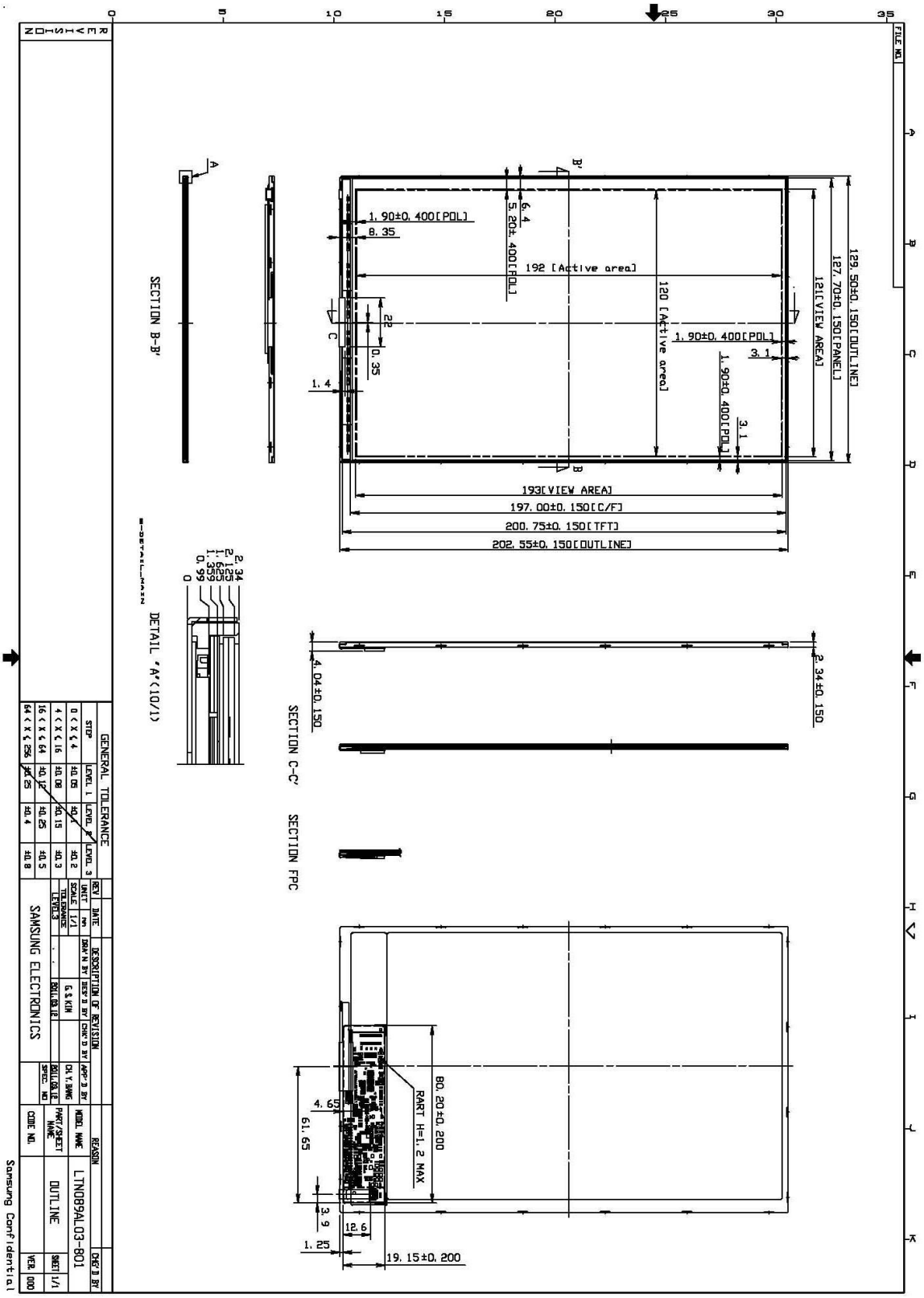

8. PACKING

TBD

9. MARKINGS & OTHERS

TBD

11. GENERAL PRECAUTIONS

1. Handling

(a) When the module is assembled, It should be attached to the system firmly using every mounting holes. Be careful not to twist and bend the modules.

(b) Refrain from strong mechanical shock and / or any force to the module. In addition to damage, this may cause improper operation or damage to the module and LED back-light.

(c) Note that polarizers are very fragile and could be easily damaged. Do not press or scratch the surface harder than a HB pencil lead.

(d) Wipe off water droplets or oil immediately. If you leave the droplets for a long time, Staining and discoloration may occur.

(e) If the surface of the polarizer is dirty, clean it using some absorbent cotton or soft cloth.

(f) The desirable cleaners are water, IPA (Isoprophyl Alcohol) or Hexane.
Do not use Ketone type materials(ex. Acetone), Ethyl alcohol, Toluene, Ethyl acid or Methyl chloride. It might permanent damage to the polarizer due to chemical reaction.

(g) If the liquid crystal material leaks from the panel, it should be kept away from the eyes or mouth . In case of contact with hands, legs or clothes, it must be washed away thoroughly with soap.

(h) Protect the module from static , it may cause damage to the C-MOS Gate Array IC.

(i) Use fingerstalls with soft gloves in order to keep display clean during the incoming inspection and assembly process.

(j) Do not disassemble the module.

(k) Do not pull or fold the LED FPC.

(l) Do not touch any component which is located on the back side.

(m) Protection film for polarizer on the module shall be slowly peeled off just before use so that the electrostatic charge can be minimized.

(n) Pins of I/F connector shall not be touched directly with bare hands.

2. STORAGE

Approval

We highly recommend to comply with the criteria in the table below.

ITEM	Unit	Min.	Max.
Storage Temperature	(℃)	5	40
Storage Humidity	(%rH)	35	75
Storage life	12 months		
Storage Condition	- The storage room should provide good ventilation and temperature control. - Products should not be placed on the floor, but on the Pallet away from a wall. - Prevent products from direct sunlight, moisture nor water; Be cautious of a build up of condensation. - Avoid other hazardous environment while storing goods. - If products delivered or kept in conditions of over the storage period of 3 months, the recommended temperature or humidity range, we recommend you leave them at a temperature of 20℃ and a humidity of 50% for 24 hours.		

3. OPERATION

(a) Do not connect,disconnect the module in the " Power On" condition.
(b) Power supply should always be turned on/off by following item 6.3 " Power on/off sequence ".
(c) Module has high frequency circuits. Sufficient suppression to the electromagnetic interference shall be done by system manufacturers. Grounding and shielding methods may be important to minimize the interference.
(d) The FPC cable between the LED chips and its converter power supply shall be a minimized length and be connected directly . The longer cable between the back-light and the converter may cause lower luminance of light source (LED).
(e) The standard limited warranty is only applicable when the module is used for general notebook applications. If used for purposes other than as specified, SEC is not to be held reliable for the defective operations. It is strongly recommended to contact SEC to find out fitness for a particular purpose.

4. OTHERS

(a) Ultra-violet ray filter is necessary for outdoor operation.
(b) Avoid condensation of water. It may result in improper operation or disconnection of electrode.
(c) Do not exceed the absolute maximum rating value. (the supply voltage variation, input voltage variation, variation in part contents and environmental temperature, so on) Otherwise the module may be damaged.
(d) If the module displays the same pattern continuously for a long period of time,it can be the situation when the image "sticks" to the screen.
(e) This module has its circuitry PCB's on the rear side and should be handled carefully in order not to be stressed.

Samsung Confidential