Approval

SAMSUNG ELECTRONICS

TO : General

DATE : Aug. 6, 2003

SAMSUNG TFT-LCD

MODEL NO. : LTN121XJ-L03

Notes :

Any Modification of Spec is not allowed without SEC' permission

APPROVED BY : K. H. Shin

PREPARED BY : **Application Engineering Team**

SAMSUNG ELECTRONICS CO., LTD.

wise view™

SEC Confidential

CONTENTS

Revision History ---------- (3)

General Description ---------- (4)

1. Absolute Maximum Ratings ---------- (5)
   1.1 Absolute Ratings Of Environment
   1.2 Electrical Absolute Ratings

2. Optical Characteristics ---------- (7)

3. Electrical Characteristics ---------- (10)
   3.1 TFT LCD Module
   3.2 Back-light Unit

4. Block Diagram ---------- (13)
   4.1 TFT LCD Module
   4.2 Back-light Unit

5. Input Terminal Pin Assignment ---------- (14)
   5.1 Input Signal & Power
   5.2 LVDS Interface
   5.3 Back-light Unit
   5.4 Timing Diagrams of LVDS For Transmitting
   5.5 Input Signals, Basic Display Colors and Gray Scale of Each Color.
   5.6 Pixel format

6. Interface Timing ---------- (19)
   6.1 Timing Parameters
   6.2 Timing Diagrams of interface Signal
   6.3 Power ON/OFF Sequence

7. Outline Dimension ---------- (21)

8. General Precautions ---------- (22)

Revision History

Approval

Date	Rev.No.	Page	Summary
April 14.2003	A00	All	LTN121XJ-L03 MODEL IS FIRST ISSUED.
Aug. 6. 2003	A01	5	Mechanical information(Weight) Type : 275g, max 285g -> Type : 285g, max 295g

GENERAL DESCRIPTION

DESCRIPTION

LTN121XJ-L03 is a color active matrix TFT (Thin Film Transistor) liquid crystal display (LCD)that uses amorphous silicon TFT as a switching devices. This model is composed of a TFTLCD panel, a driver circuit and a back-light system. The resolution of a 12.1″ contains 1024 x 768 pixels and can display up to 262,144colors. 6 o'clock direction is the optimum viewing angle.

FEATURES

- Ultra Thin and light weight
- High contrast ratio
- XGA (1024x768 pixels) resolution
- Low power consumption
- DE (Data Enable) only mode.
- 3.3V LVDS Interface with 1 pixel / clock
- EDID

APPLICATIONS

- Portable notebook PC, Tablet PC
- Display terminals for AV application products
- Monitors for Industrial machine
- If the usage of this product is not for PC application, but for others, please contact SEC.

GENERAL INFORMATION

ITEM	SPECIFICATION	UNIT	NOTE
Display area	245.76(H) x 184.32(V) (12.1″ diagonal)	mm	
Driver element	a-Si TFT active matrix		
Display colors	262,144	Color	
Number of pixel	1024 x 768 (XGA)	pixel	
Pixel arrangement	RGB vertical stripe		
Pixel pitch	0.240(H) x 0.240(V) (TYP.)	mm	
Display Mode	Normally white		
Surface treatment	HAZE (25), ANTIGLARE & HARD-COATING 3H		

MECHANICAL INFORMATION

ITEM		MIN.	TYP.	MAX.	NOTE
Module size	Horizontal (H)	260.5	261.0	261.5	
	Vertical (V)	198.5	199.0	199.5	
	Thickness (T)	-	4.7	5.0	(1)
Weight		-	285	295	g

Note (1) Measurement condition of outline dimension
. Equipment : Vernier Calipers
. Push Force : 500g ·f (minimum)

1. ABSOLUTE MAXIMUM RATINGS

1.1 ABSOLUTE RATINGS OF ENVIRONMENT

ITEM	SYMBOL	MIN.	MAX.	UNIT	NOTE
Storage temperature	T_{STG}	-25	60	°C	(1)
Operating temperature (Temperature of glass surface)	T_{OPR}	0	50	°C	(1)
Shock (non-operating)	Snop	-	220	G	(2),(4)
Vibration (non-operating)	Vnop	-	1. 5	G	(3),(4)

Note (1) Temperature and relative humidity range are shown in the figure below.
90 % RH Max. (40 °C ≥ Ta)
Maximum wet - bulb temperature at 39 °C or less. (Ta > 40 °C) No condensation.

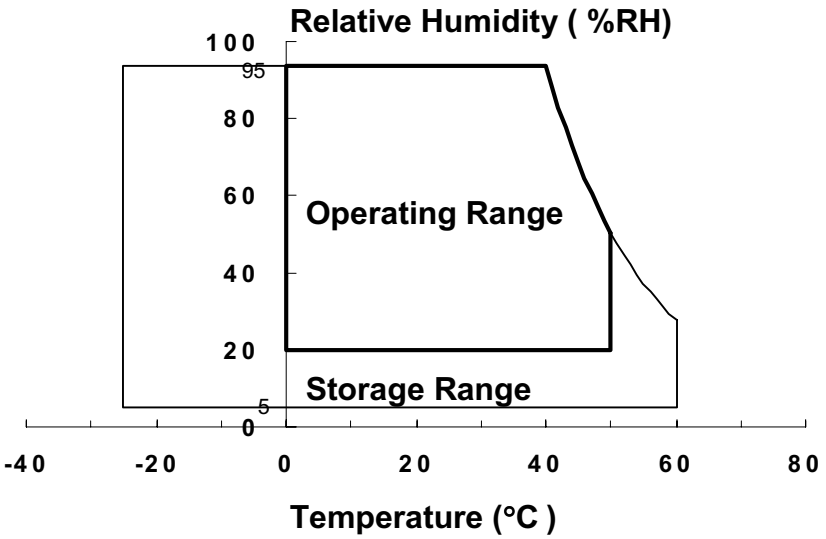

(2) 2ms, half sine wave, one time for ± X, ± Y, ± Z.
(3) 10 - 300 Hz, Sweep rate 10 min, 30min for X,Y,Z.
(4) At testing Vibration and Shock, the fixture in holding the Module to be tested have to be hard and rigid enough so that the Module would not be twisted or bent by the fixture.

1.2 ELECTRICAL ABSOLUTE RATINGS

(1) TFT LCD MODULE

(Vss = GND = 0 V)

ITEM	SYMBOL	MIN.	MAX.	UNIT	NOTE
Power Supply Voltage	V_{DD}	Vss -0.3	V_{DD}+0.3	V	(1)
Logic Input Voltage	V_{IN}	Vss -0.3	V_{DD}+0.3	V	(1)

NOTE (1) Within Ta = 25 ± 2 °C

(2) BACK-LIGHT UNIT

Ta = 25 ± 2 °C

ITEM	SYMBOL	MIN.	MAX.	UNIT.	NOTE
Lamp current	I_L	2.0	6.5	mA_{rms}	(1)
Lamp frequency	F_L	50	80	KHz	(1)

NOTE (1) Permanent damage to the device may occur if maximum values are exceeded.
Functional operation should be restricted to the conditions described under Normal Operating Conditions.

2. OPTICAL CHARACTERISTICS

The following items are measured under stable conditions. The optical characteristics should be measured in a dark room or equivalent state with the methods shown in Note (5).
Measuring equipment : TOPCON BM-5A , PR650

* Ta = 25 ± 2°C , V_{DD}=3.3V, fv= 60Hz, f_{DCLK}=65MHz, I_L = 6.0mA

ITEM		SYMBOL	CONDITION	MIN.	TYP.	MAX.	UNIT	NOTE
Contrast Ratio (5 Points)		CR	ϕ = 0, θ = 0 Normal Viewing Angle	200	-	-		(1), (2), (5)
Response Time at Ta	Rising	T_R		-	6	10	msec	(1), (3)
	Falling	T_F		-	25	30		
Average Luminance of White (5 Points)		$Y_{L,AVE}$		130	150	-	cd/m^2	(1), (4) I_L = 6.0mA
Color Chromaticity (CIE)	Red	R_X		0.565	0.595	0.625		Measured by PR 650 (1), (5)
		R_Y		0.310	0.340	0.370		
	Green	G_X		0.285	0.315	0.345		
		G_Y		0.505	0.535	0.565		
	Blue	B_X		0.125	0.155	0.185		
		B_Y		0.110	0.140	0.170		
	White	W_X		0.283	0.313	0.343		
		W_Y		0.299	0.329	0.359		
Viewing Angle	Hor.	θ_L	CR(at center point) ≥ 10	-	40	-	Degrees	
		θ_R		-	40	-		
	Ver.	ϕ_H		-	10	-		
		ϕ_L		-	30	-		
13 Points White Variation		δ_L		-	-	1.75		(6)

Note 1) Definition of Viewing Angle : Viewing angle range($10 \le C/R$)

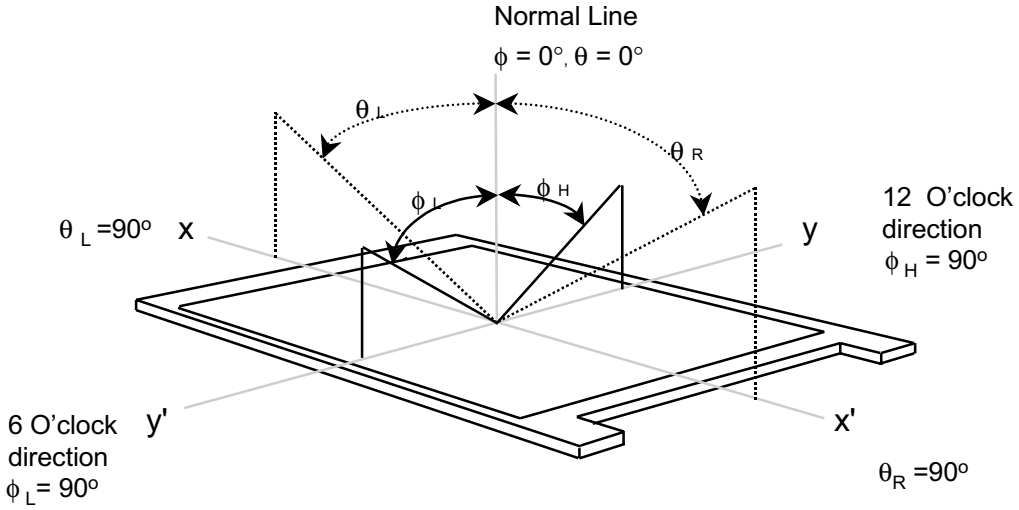

Note 2) Definition of Contrast Ratio (CR) : Ratio of gray max (Gmax) ,gray min (Gmin) at 5 points(4, 5, 7, 9, 10)

$$CR = \frac{CR(4) + CR(5) + CR(7) + CR(9) + CR(10)}{5}$$

POINTS : (4) , (5) , (7) , (9) , (10) at FIGURE OF NOTE 6)

Note 3) Definition of Response time :

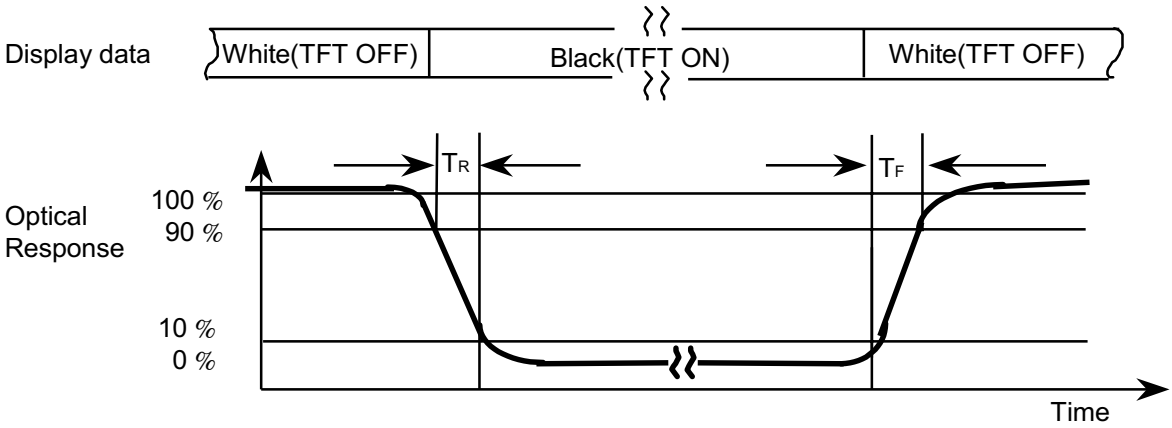

Note 4) Definition of Average Luminance of White : measure the luminance of white at 5 points.

Average Luminance of White ($Y_{L,AVE}$)

$$Y_{L,AVE} = \frac{Y_{L4} + Y_{L5} + Y_{L7} + Y_{L9} + Y_{L10}}{5}$$

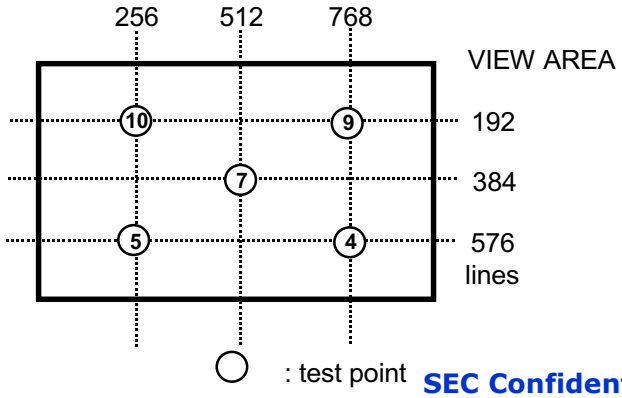

Note 5) After stabilizing and leaving the panel alone at a given temperature for 30 minutes, the measurement should be executed. Measurement should be executed in a stable, windless,and dark room.
30 minutes after lighting the back-light. This should be measured in the center of screen.
Lamp current : 6.0 mA
Environment condition : Ta = 25 ± 2 °C

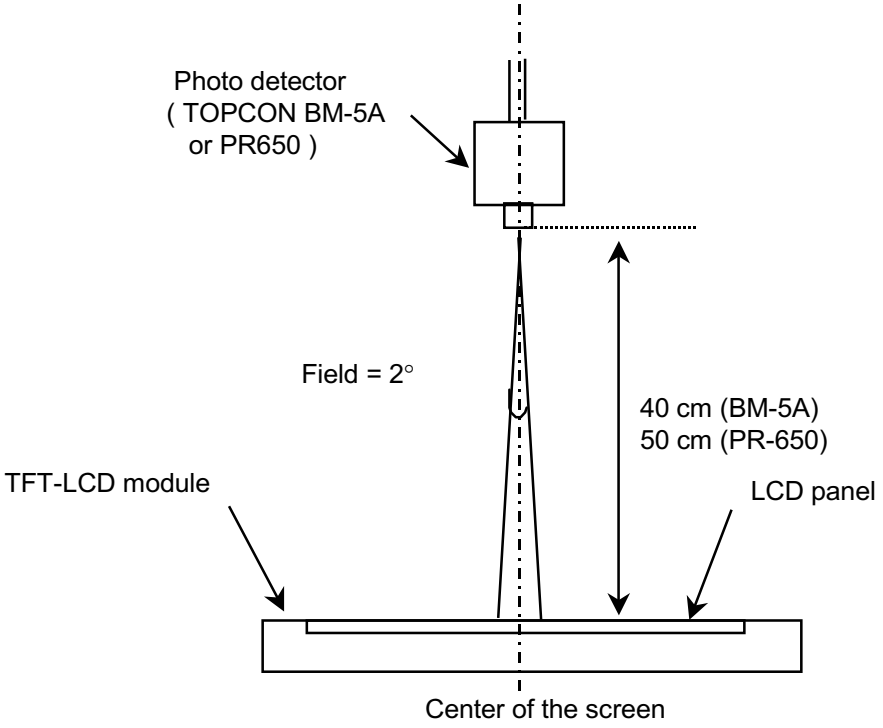

Optical characteristics measurement setup

Note 6) Definition of 13 points white variation (δ_W), CR variation(C_{VER}) [1 ~ 13]

$$\delta_L = \frac{\text{Maximum luminance of 13 points}}{\text{Minimum luminance of 13 points}}$$

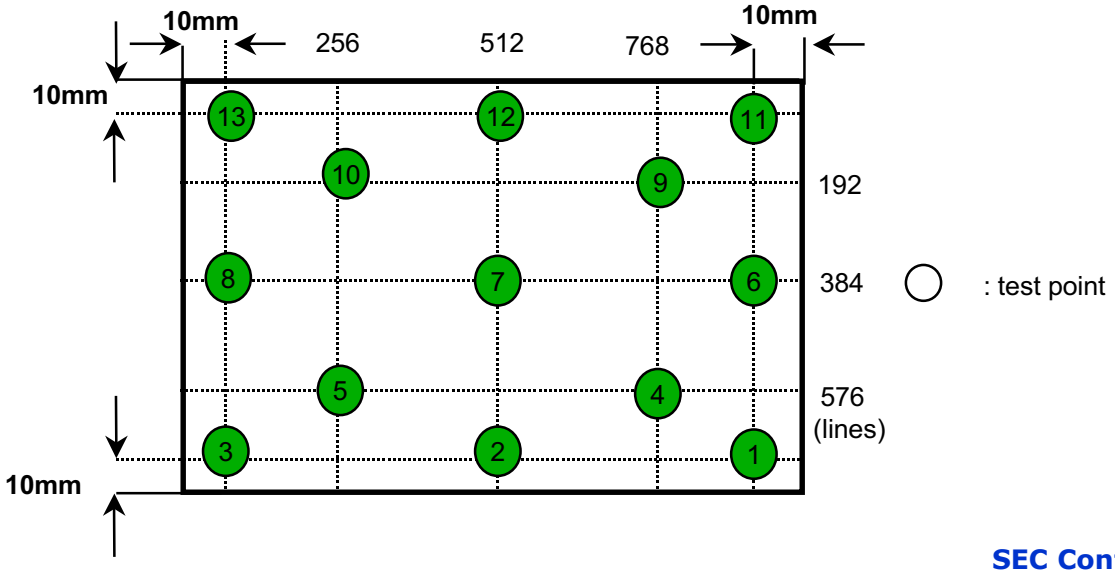

3. ELECTRICAL CHARACTERISTICS

3.1 TFT LCD MODULE

Ta = 25 ± 2 °C

ITEM		SYMBOL	MIN	TYP	MAX	UNIT	NOTE
Voltage of Power Supply		V_{DD}	3.0	3.3	3.6	V	
Differential Input Voltage for LVDS Receiver Threshold	High	V_{IH}	-	-	+100	mV	(1)
	Low	V_{IL}	-100	-	-	mV	
Vsync Frequency		fv	-	60	-	Hz	
Hsync Frequency		f_H	-	48.2	-	KHz	
Main Frequency		f_{DCLK}	-	65	-	MHz	
Rush Current		I_{RUSH}	-	-	1.5	A	(4)
Current of Power Supply	White	I_{DD}	-	270	-	mA	(2),(3)
	Mosaic		-	300	-	mA	(2),(3)
	Max.		-	350	380	mA	(2),(3)

Note (1) Condition : V_{CM}=+1.2V(Common mode Voltage)

(2) f_V=60Hz, f_{DCLK} =65MHZ, Vdd = 3.3V , DC Current.

(3) Power dissipation check pattern

*a) White Pattern

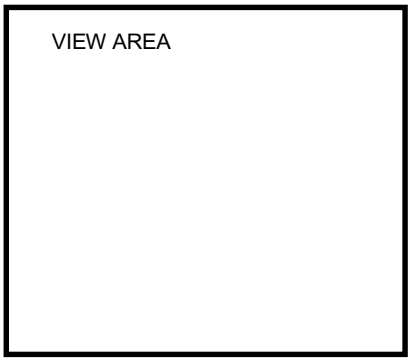

*b)Mosaic Pattern

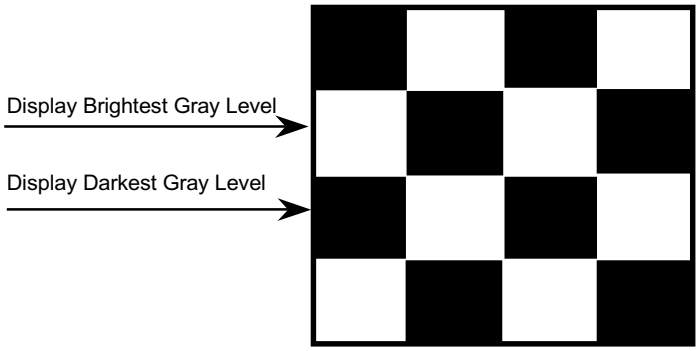

*c) 1 dot pattern(Max current pattern)

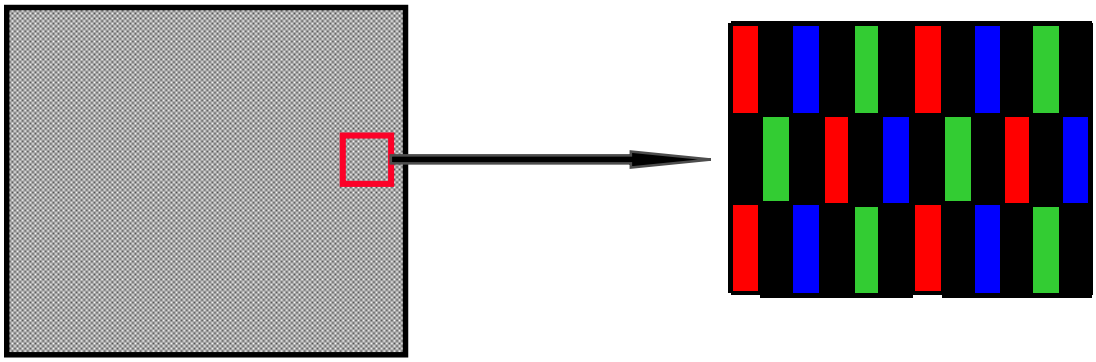

4) Rush current measurement condition

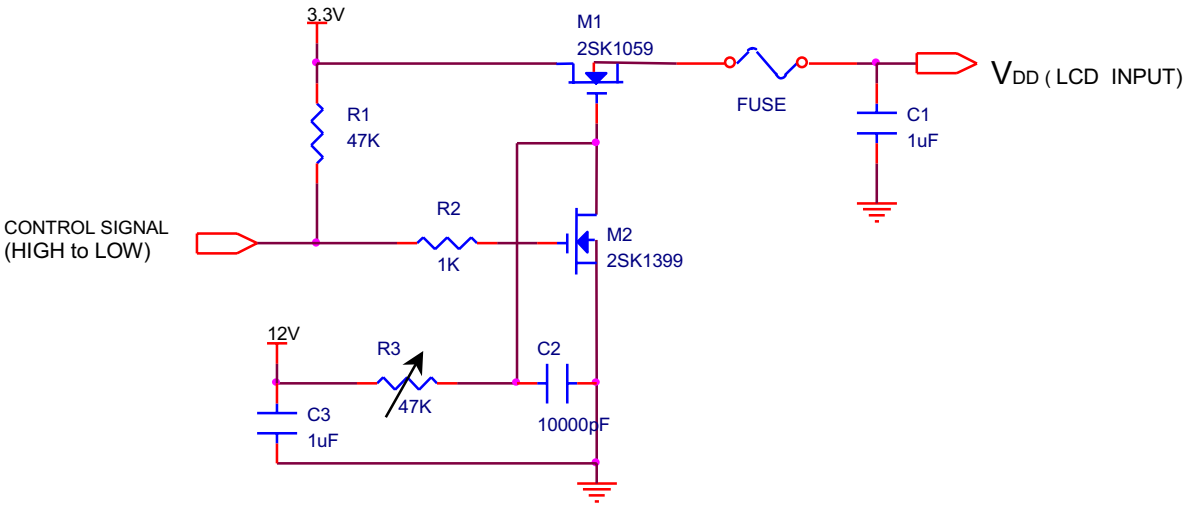

VDD rising time is 470us

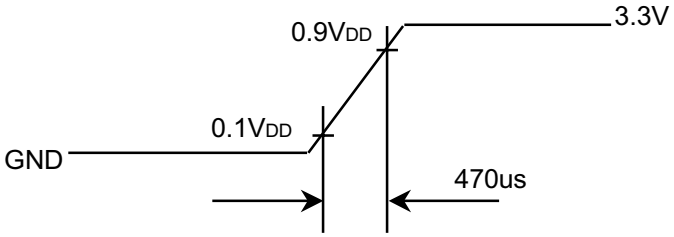

3.2 BACKLIGHT UNIT

The back-light system is an edge - lighting type with a single CCFL (Cold Cathode Fluorescent Lamp). The characteristics of a single lamp are shown in the following tables.

INVERTER : SIC-130T(SEC standard test inverter) Ta = 25 ± 2°C

ITEM	SYMBOL	MIN	TYP	MAX	UNIT	NOTE
Lamp Current	I_L	3.0	6.0	6.5	mA_{rms}	(1)
Lamp Voltage	V_L	-	565	-	V_{rms}	I_L=6.0mA
Frequency	f_L	50	60	65	KHz	
Power Consumption	P_L	-	-	3.5	W	(2) I_L=6.0mA
Operating Life Time	Hr	10,000	-	-	Hour	(3)
Startup Voltage	V_S	-	-	1080 (25°C) 1300 (0°C)	V_{rms}	

Note (1) Lamp current is measured with a high frequency current meter as shown below.

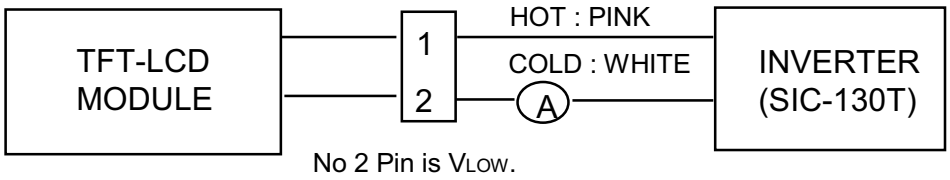

No 2 Pin is V_{LOW}.

(2) The value is calculated by I_L X V_L when inverter's efficient is 85%. .

(3) Life time (Hr) of a lamp can be defined as the time in which it continues to operate under the condition Ta = 25 ± 2°C and I_L = 6.0 mA_{rms} until one of the following event occurs.

1. When the brightness becomes 50% or lower than it's original.
2. When the Effective ignition length becomes 80% or lower than it's original value. (Effective ignition length is defined as an area that has less than 70% brightness compared to the brightness in the center point.)

.

4. BLOCK DIAGRAM

4.1 TFT LCD MODULE

Connector : HIROSE DF-19L20P-1H

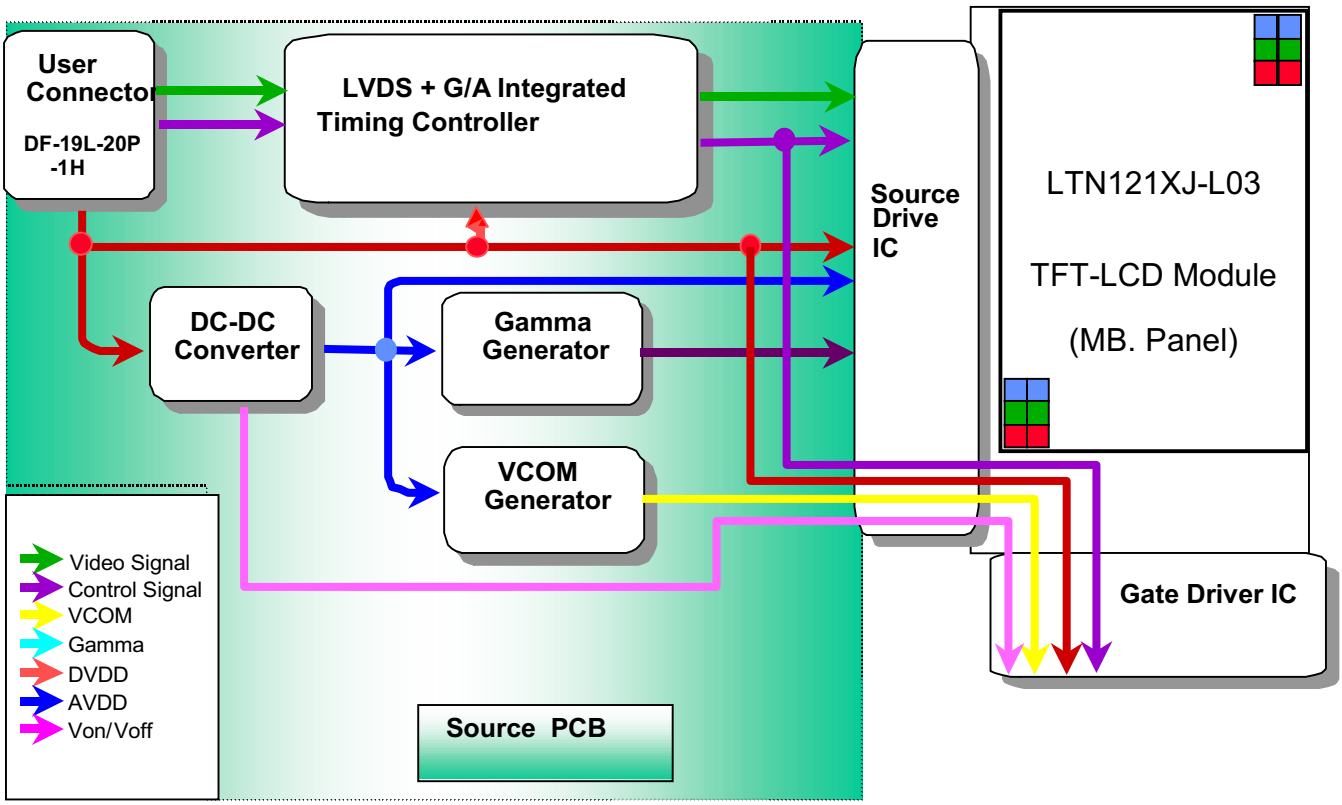

4.2 BACKLIGHT UNIT

Connector : JST BHSR-02VS-01

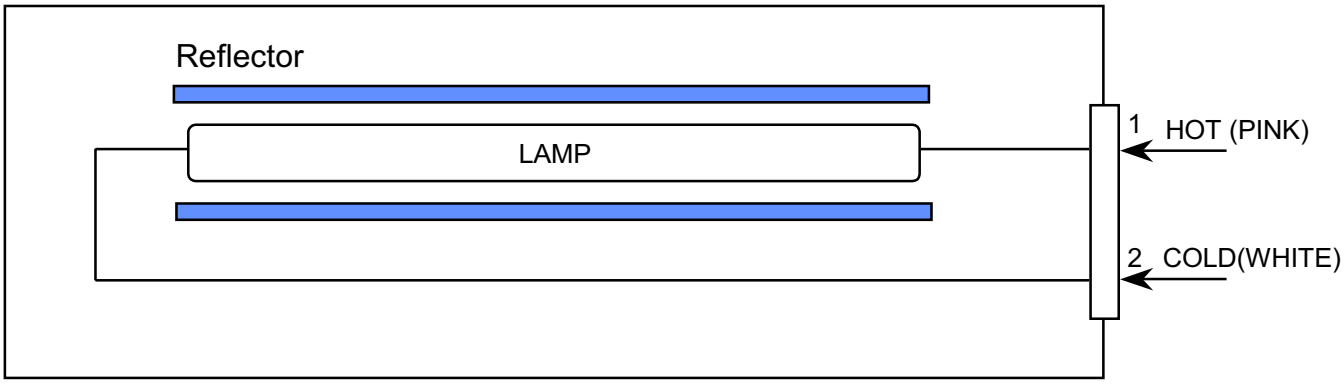

Note) The output of the inverter may change according to the material of the reflector.

5. INPUT TERMINAL PIN ASSIGNMENT

5.1. Input Signal & Power (LVDS, Connector : HIROSE DF-19L-20P-1H)

PIN NO	SYMBOL	FUNCTION	POLARITY	REMARK
1	VDD	POWER SUPPLY +3.3V		
2	VDD	POWER SUPPLY +3.3V		
3	GND	GROUND		
4	GND	GROUND		
5	RxIN0-	LVDS Differential Data INPUT	Negative	R0~R5 G0
6	RxIN0+	LVDS Differential Data INPUT	Positive	
7	GND	GROUND		
8	RxIN1-	LVDS Differential Data INPUT	Negative	G1~G5 B0~B1
9	RxIN1+	LVDS Differential Data INPUT	Positive	
10	GND	GROUND		
11	RxIN2-	LVDS Differential Data INPUT	Negative	B2~B5,DE Hsync,Vsync
12	RxIN2+	LVDS Differential Data INPUT	Positive	
13	GND	GROUND		
14	RxCLKIN-	LVDS Differential Clock INPUT	Negative	
15	RxCLKIN+	LVDS Differential Clock INPUT	Positive	
16	GND	GROUND		
17	NC	No Connection		
18	NC	No Connection		
19	GND	GROUND		
20	GND	GROUND		

5.2 LVDS Interface : Transmitter DS90CF383 or Compatible

Pin No.	Name	RGB Signal	Pin No.	Name	RGB Signal
51	TxIN0	R0	14	TxIN14	G5
52	TxIN1	R1	15	TxIN15	B0
54	TxIN2	R2	19	TxIN18	B1
55	TxIN3	R3	20	TxIN19	B2
56	TxIN4	R4	22	TxIN20	B3
3	TxIN6	R5	23	TxIN21	B4
4	TxIN7	G0	24	TxIN22	B5
6	TxIN8	G1	27	TxIN24	Hsync
7	TxIN9	G2	28	TxIN25	Vsync
11	TxIN12	G3	30	TxIN26	DE
12	TxIN13	G4	31	TxCLKIN	Clock

FLAT LINK INTERFACE

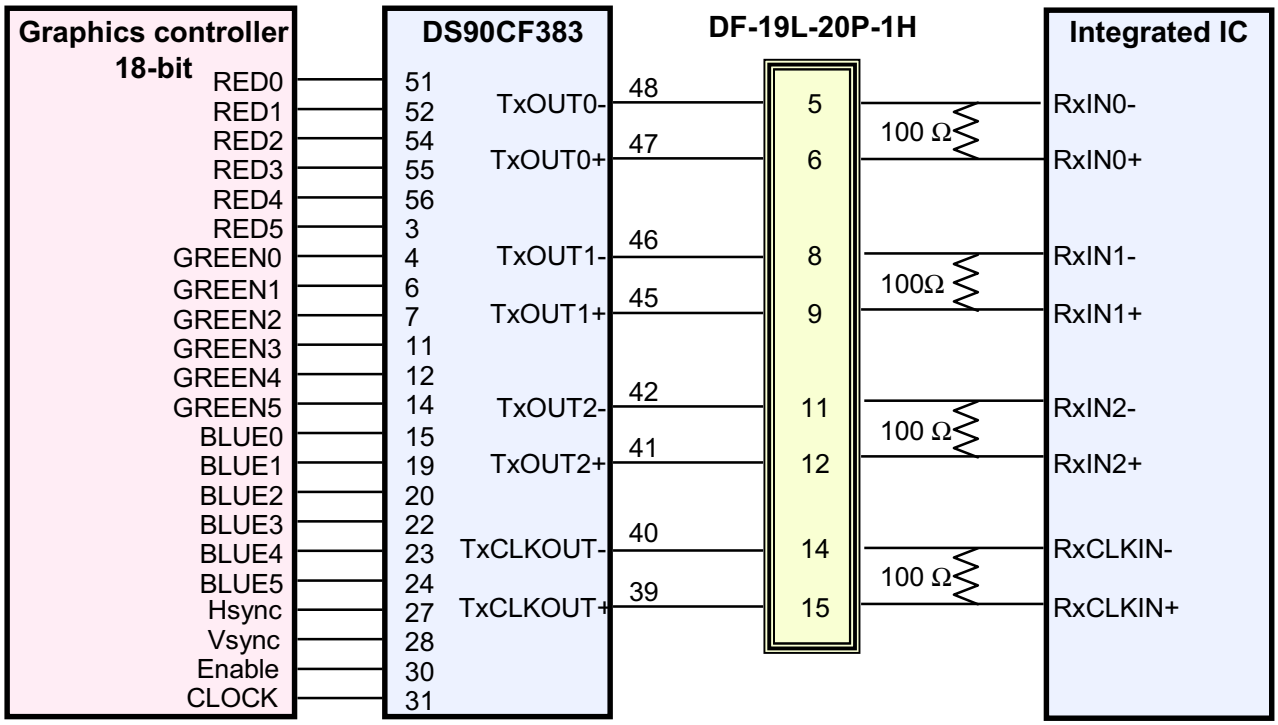

5.3 BACK LIGHT UNIT

Connector : JST BHSR - 02VS -1
Mating Connector : JST SM02B-BHSS-1

Pin NO.	Symbol	Color	Function
1	HOT	PINK	High Voltage
2	COLD	WHITE	Low Voltage

5.4 Timing Diagrams of LVDS For Transmission

LVDS Receiver : LXD01812(including I/F IC)

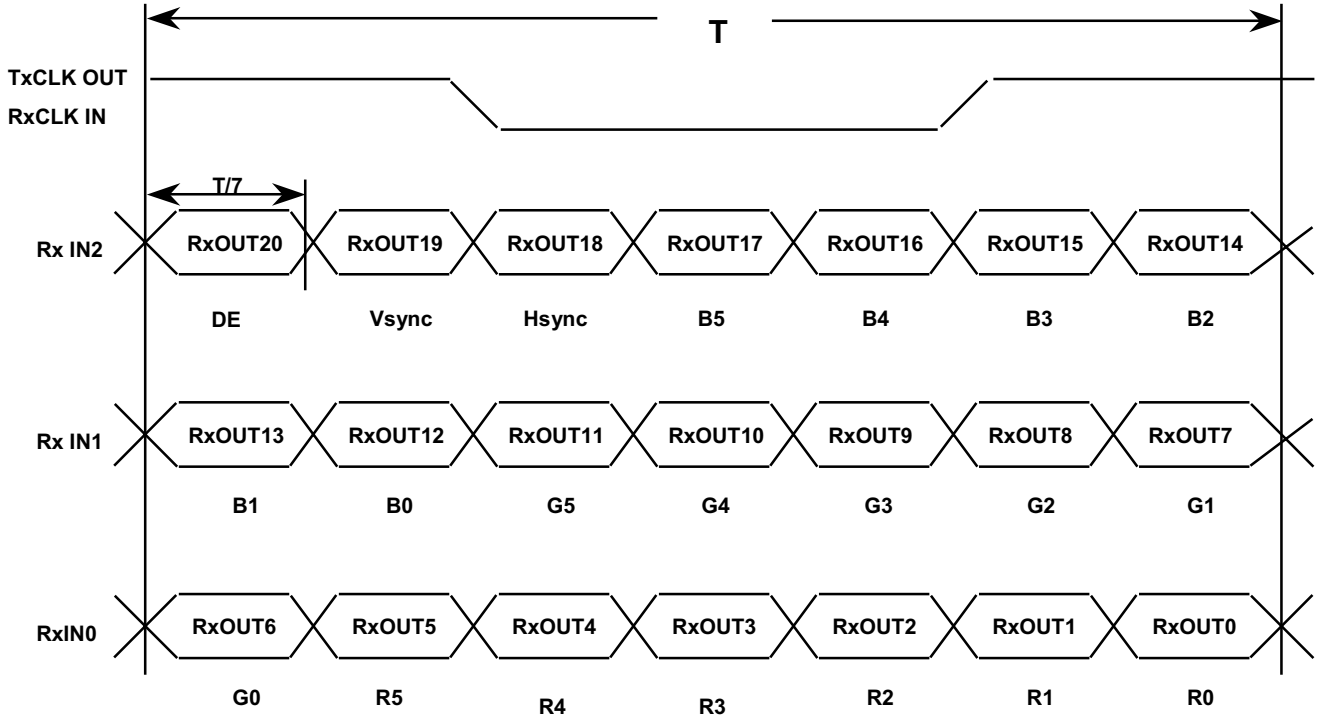

Approval

5.5 Input Signal,Basic Display Colors and Gray Scale of Each Colors

COLOR	DISPLAY	DATA SIGNAL																		GRAY SCALE LEVEL
		RED						GREEN						BLUE						
		R0	R1	R2	R3	R4	R5	G0	G1	G2	G3	G4	G5	B0	B1	B2	B3	B4	B5	
BASIC COLOR	BLACK	0	0	0	0	0	0	0	0	0	0	0	0	0	0	0	0	0	0	-
	BLUE	0	0	0	0	0	0	0	0	0	0	0	0	1	1	1	1	1	1	-
	GREEN	0	0	0	0	0	0	1	1	1	1	1	1	0	0	0	0	0	0	-
	CYAN	0	0	0	0	0	0	1	1	1	1	1	1	1	1	1	1	1	1	-
	RED	1	1	1	1	1	1	0	0	0	0	0	0	0	0	0	0	0	0	-
	MAGENTA	1	1	1	1	1	1	0	0	0	0	0	0	1	1	1	1	1	1	-
	YELLOW	1	1	1	1	1	1	1	1	1	1	1	1	0	0	0	0	0	0	-
	WHITE	1	1	1	1	1	1	1	1	1	1	1	1	1	1	1	1	1	1	-
GRAY SCALE OF RED	BLACK	0	0	0	0	0	0	0	0	0	0	0	0	0	0	0	0	0	0	R0
	DARK ↑	1	0	0	0	0	0	0	0	0	0	0	0	0	0	0	0	0	0	R1
		0	1	0	0	0	0	0	0	0	0	0	0	0	0	0	0	0	0	R2
		:	:	:	:	:	:	:	:	:	:	:	:	:	:	:	:	:	:	R3~R60
		:	:	:	:	:	:	:	:	:	:	:	:	:	:	:	:	:	:	
	↓ LIGHT	1	0	1	1	1	1	0	0	0	0	0	0	0	0	0	0	0	0	R61
		0	1	1	1	1	1	0	0	0	0	0	0	0	0	0	0	0	0	R62
	RED	1	1	1	1	1	1	0	0	0	0	0	0	0	0	0	0	0	0	R63
GRAY SCALE OF GREEN	BLACK	0	0	0	0	0	0	0	0	0	0	0	0	0	0	0	0	0	0	G0
	DARK ↑	0	0	0	0	0	0	1	0	0	0	0	0	0	0	0	0	0	0	G1
		0	0	0	0	0	0	0	1	0	0	0	0	0	0	0	0	0	0	G2
		:	:	:	:	:	:	:	:	:	:	:	:	:	:	:	:	:	:	G3~G60
		:	:	:	:	:	:	:	:	:	:	:	:	:	:	:	:	:	:	
	↓ LIGHT	0	0	0	0	0	0	1	0	1	1	1	1	0	0	0	0	0	0	G61
		0	0	0	0	0	0	0	1	1	1	1	1	0	0	0	0	0	0	G62
	GREEN	0	0	0	0	0	0	1	1	1	1	1	1	0	0	0	0	0	0	G63
GRAY SCALE OF BLUE	BLACK	0	0	0	0	0	0	0	0	0	0	0	0	0	0	0	0	0	0	B0
	DARK ↑	0	0	0	0	0	0	0	0	0	0	0	0	1	0	0	0	0	0	B1
		0	0	0	0	0	0	0	0	0	0	0	0	0	1	0	0	0	0	B2
		:	:	:	:	:	:	:	:	:	:	:	:	:	:	:	:	:	:	B3~B60
		:	:	:	:	:	:	:	:	:	:	:	:	:	:	:	:	:	:	
	↓ LIGHT	0	0	0	0	0	0	0	0	0	0	0	0	1	0	1	1	1	1	B61
		0	0	0	0	0	0	0	0	0	0	0	0	0	1	1	1	1	1	B62
	BLUE	0	0	0	0	0	0	0	0	0	0	0	0	1	1	1	1	1	1	B63

Note

(1) Definition of Gray : Rn : Red Gray, Gn : Green Gray, Bn : Blue Gray (n = Gray level)

(2) Input Signal : 0 = Low level voltage, 1 = High level voltage

Approval

5.6 PIXEL FORMAT

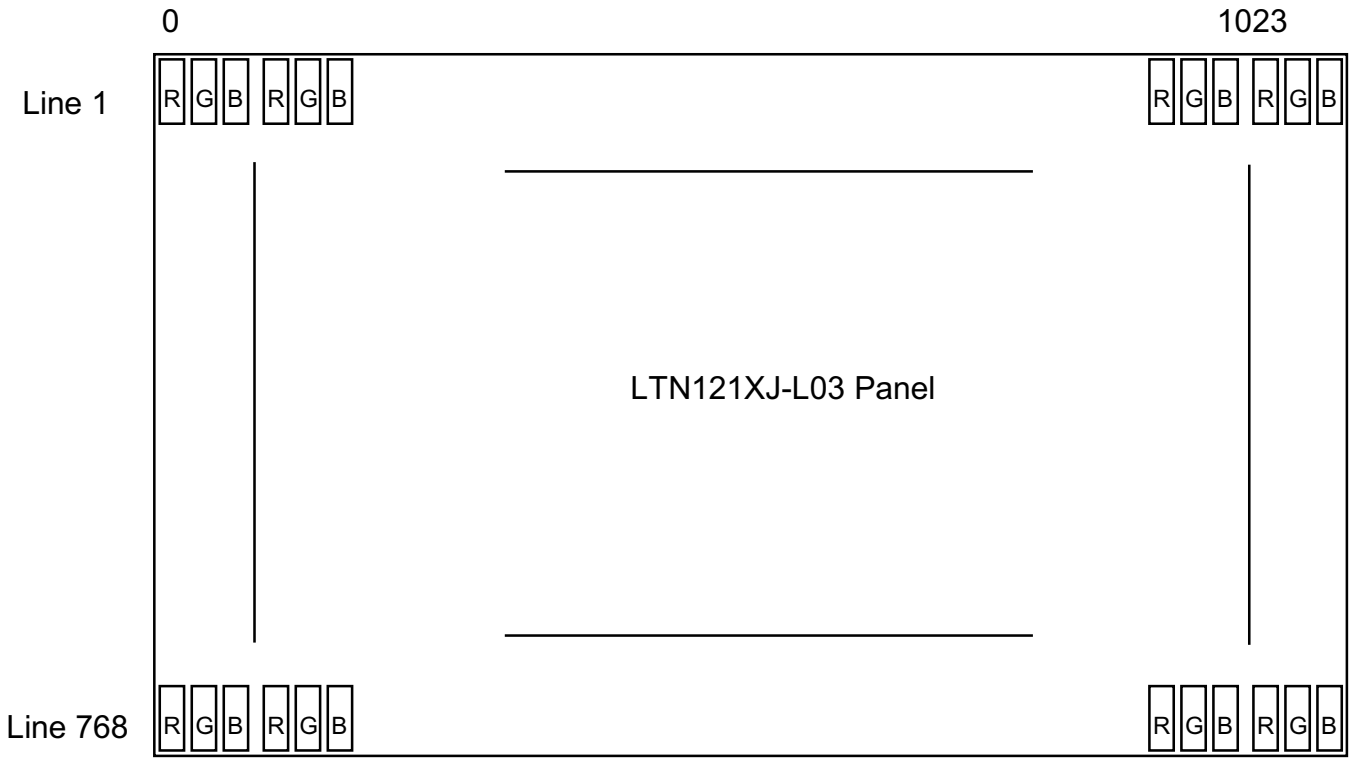

6. INTERFACE TIMING

6.1 Timing Parameters

Signal	Item	Symbol	MIN	TYP	MAX	Unit	Note
Frame Frequency	Cycle	T_V	772	806	1000	lines	
Vertical Active Display Term	Display Period	T_{VD}	-	768	-	lines	
One Line Scanning Time	Cycle	T_H	1072	1344	2000	clocks	
Horizontal Active Display Term	Display Period	T_{HD}	-	1024	-	clocks	

6.2 Timing diagrams of interface signal

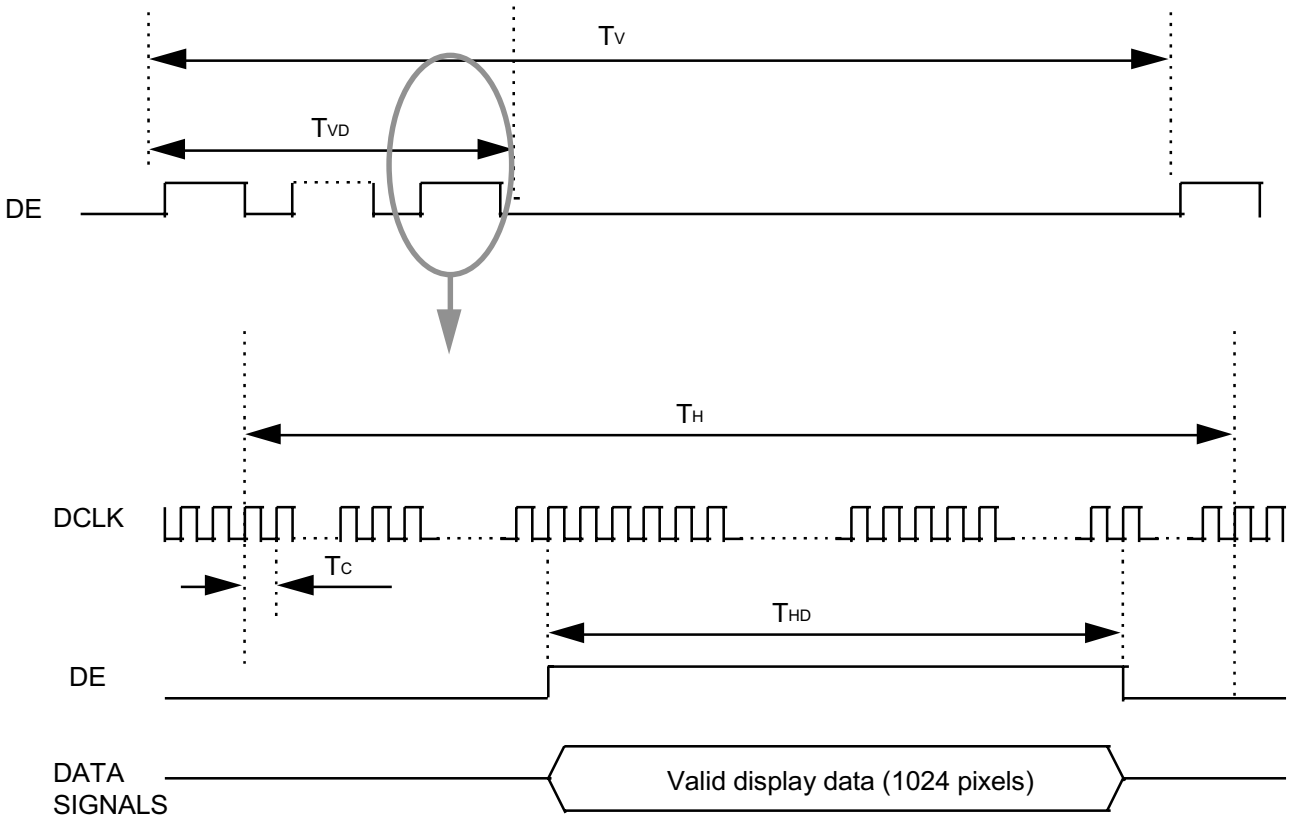

Note
(1) All input condition(level&timing) for LXD01812 are the same with those of NS DS90CF384 or compatible.

6.3 Power ON/OFF Sequence

: To prevent a latch-up or DC operation of the LCD module, the power on/off sequence should be as the diagram below.

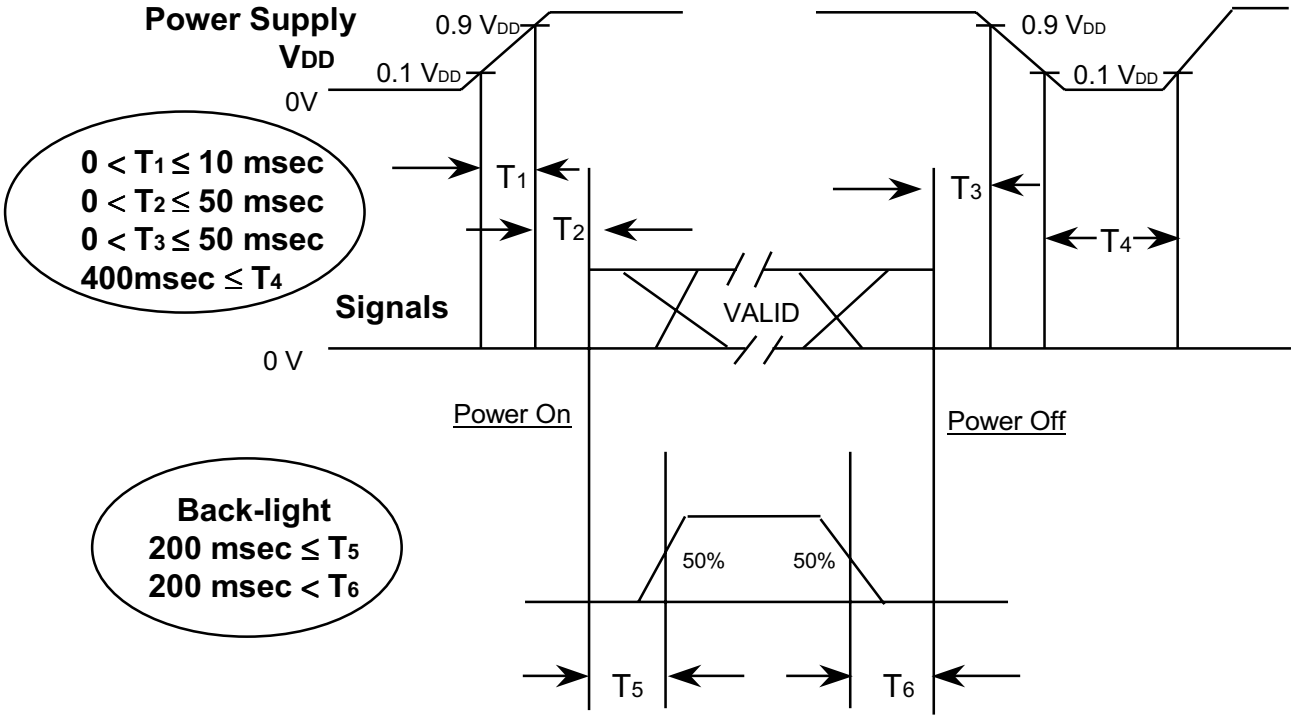

Power ON/OFF Sequence

T1 : Vdd rising time from 10% to 90%
T2 : The time from Vdd to valid data at power ON.
T3 : The time from valid data off to Vdd off at power Off.
T4 : Vdd off time for Windows restart
T5 : The time from valid data to B/L enable at power ON.
T6 : The time from valid data off to B/L disable at power Off.

NOTE.

(1) The supply voltage of the external system for the module input should be the same as the definition of V_{DD}.
(2) Apply the lamp voltage within the LCD operation range. When the back-light turns on before the LCD operation or the LCD turns off before the back-light turns off, the display may momentarily become white.
(3) In case of V_{DD} = off level, please keep the level of input signals on the low or keep a high impedance.
(4) T4 should be measured after the module has been fully discharged between power off and on period.
(5) Interface signal shall not be kept at high impedance when the power is on.

7. Outline Dimension

Refer to the attachment (A3 size format)

8. GENERAL PRECAUTIONS

1. Handling

(a) When the module is assembled, It should be attached to the system firmly using every mounting holes. Be careful not to twist and bend the modules.

(b) Refrain from strong mechanical shock and / or any force to the module. In addition to damage, this may cause improper operation or damage to the module and CCFL back-light.

(c) Note that polarizers are very fragile and could be easily damaged. Do not press or scratch the surface harder than a HB pencil lead.

(d) Wipe off water droplets or oil immediately. If you leave the droplets for a long time, Staining and discoloration may occur.

(e) If the surface of the polarizer is dirty, clean it using some absorbent cotton or soft cloth.

(f) The desirable cleaners are water, IPA(Isoprophyl Alcohol) or Hexane.
Do not use Ketone type materials(ex. Acetone), Ethyl alcohol, Toluene, Ethyl acid or Methyl chloride. It might permanent damage to the polarizer due to chemical reaction.

(g) If the liquid crystal material leaks from the panel, it should be kept away from the eyes or mouth . In case of contact with hands, legs or clothes, it must be washed away thoroughly with soap.

(h) Protect the module from static , it may cause damage to the C-MOS Gate Array IC.

(i) Use fingerstalls with soft gloves in order to keep display clean during the incoming inspection and assembly process.

(j) Do not disassemble the module.

(k) Do not pull or fold the lamp wire.

(l) Do not adjust the variable resistor which is located on the back side.

(m) Protection film for polarizer on the module shall be slowly peeled off just before use so that the electrostatic charge can be minimized.

(n) Pins of I/F connector shall not be touched directly with bare hands.

2. STORAGE

(a) Do not leave the module in high temperature, and high humidity for a long time. It is highly recommended to store the module with temperature from 0 to 35 °C and relative humidity of less than 70%.

(b) Do not store the TFT-LCD module in direct sunlight.

(c) The module shall be stored in a dark place. It is prohibited to apply sunlight or fluorescent light during the store.

3. OPERATION

(a) Do not connect,disconnect the module in the “Power On” condition.

(b) Power supply should always be turned on/off by following item 6.3 “ Power on/off sequence “.

(c) Module has high frequency circuits. Sufficient suppression to the electromagnetic interference shall be done by system manufacturers. Grounding and shielding methods may be important to minimize the interference.

(d) The cable between the back-light connector and its inverter power supply shall be a minimized length and be connected directly . The longer cable between the back-light and the inverter may cause lower luminance of lamp(CCFL) and may require higher startup voltage(Vs).

4. OTHERS

(a) Ultra-violet ray filter is necessary for outdoor operation.

(b) Avoid condensation of water. It may result in improper operation or disconnection of electrode.

(c) Do not exceed the absolute maximum rating value. (the supply voltage variation, input voltage variation, variation in part contents and environmental temperature, so on) Otherwise the module may be damaged.

(d) If the module displays the same pattern continuously for a long period of time,it can be the situation when the image “sticks” to the screen.

(e) This module has its circuitry PCB’s on the rear side and should be handled carefully in order not to be stressed.

FILE NO.

NO	PART NAME	CODE NO	SPECIFICATION	Q'TY	WEIGHT FINISH	WEIGHT MATERIAL	UNFOLDED DIM. OF MATERIAL	REMARK

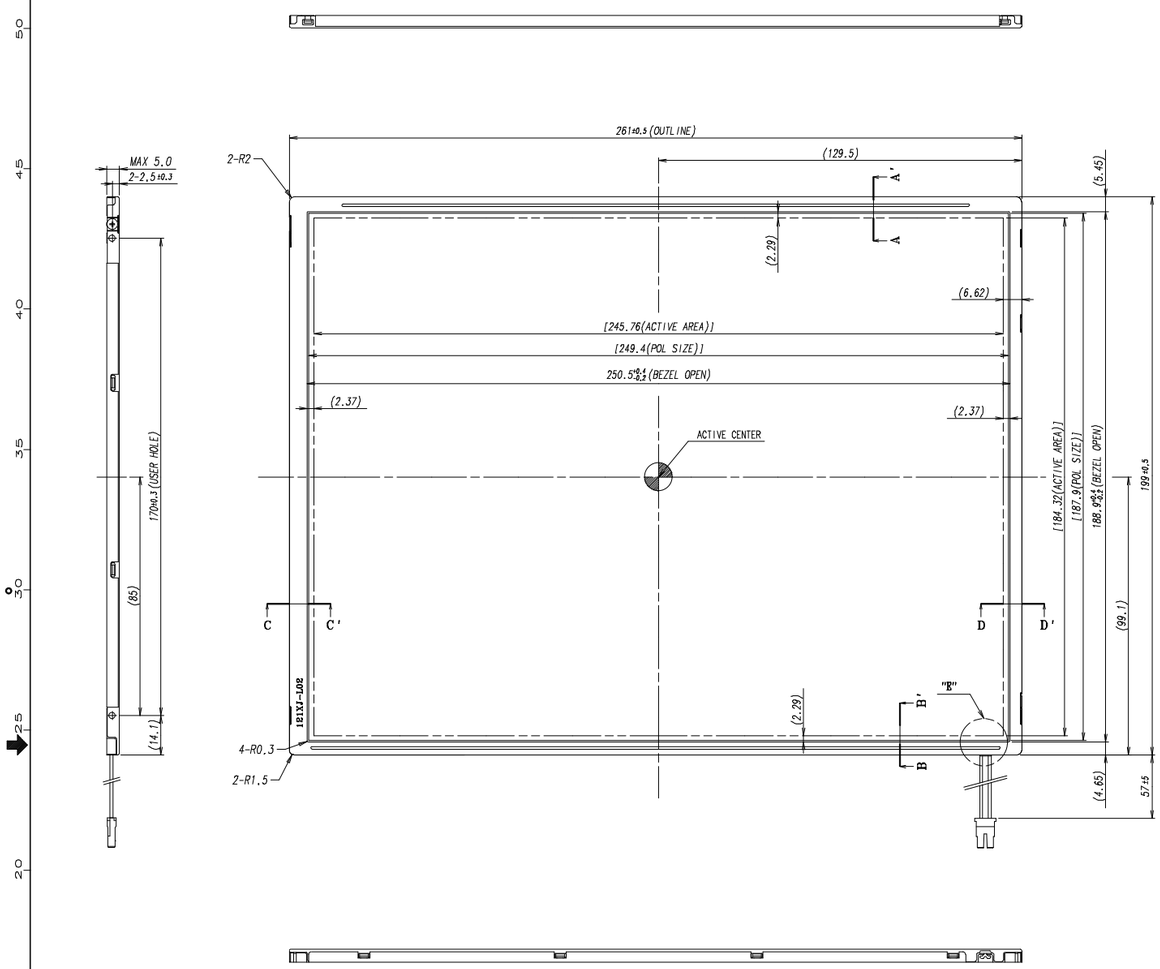

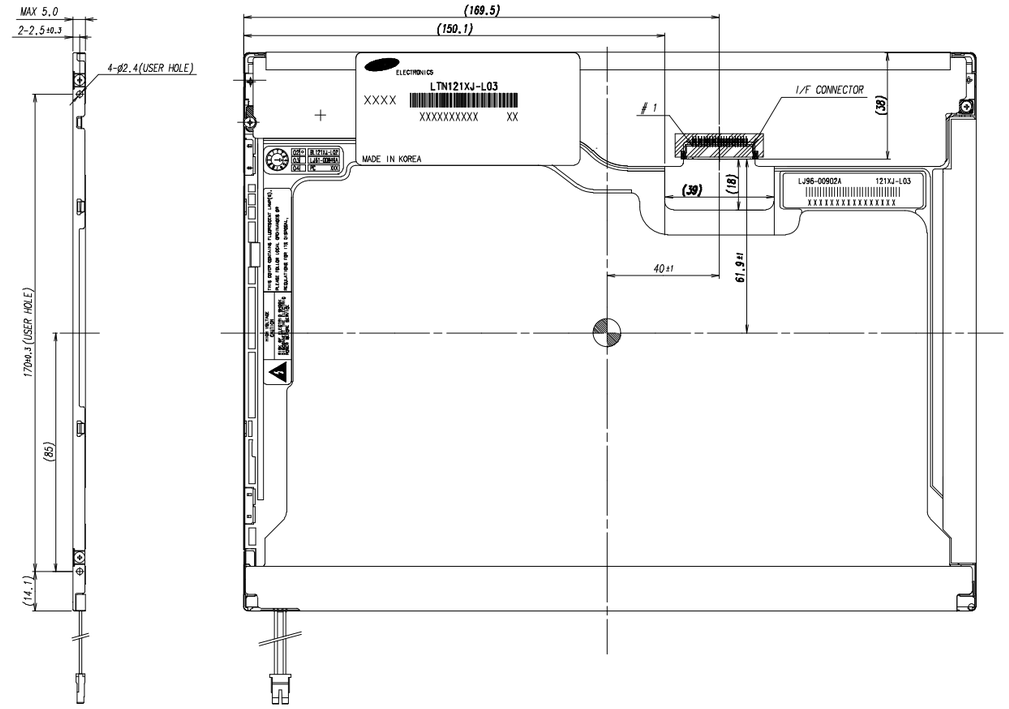

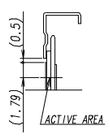

SECTION A-A'(S=3/1)

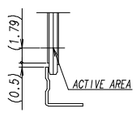

SECTION B-B'(S=3/1)
(Only LCD Module)

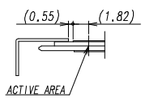

SECTION C-C'(S=3/1)

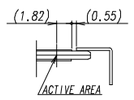

SECTION D-D'(S=3/1)

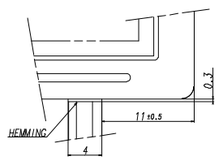

DETAIL "E"(S=3/1)

* NOTE

1. INPUT CONN. SPEC
   - MAKER : HIROSE
   - PART NO : DF19L-20P-1H
2. MATCHING CONN. SPEC.
   - MAKER : HIROSE
   - PART NO : DF19G-20S-1C
3. CCFT LAMP CONN. SPEC.
   - MAKER : JST
   - PART NO : BHSR-02VS-01
   - LAMP DIAMETER : ø1.8
4. **ALLOWED DEPTH OF USERHOLE SCREW INSERTION IS 2.5mm MAX.**
5. MEASURING FORCE : 750±250gf-cm

REVISION

GENERAL TOLERANCE			
STEP	LEVEL 1	LEVEL 2	LEVEL 3
0 < X ≤ 4	±0.05	±0.1	±0.2
4 < X ≤ 16	±0.08	±0.15	±0.3
16 < X ≤ 64	±0.12	±0.25	±0.5
64 < X ≤ 256	±0.25	±0.4	±0.8

REV	DATE	DESCRIPTION OF REVISION				REASON	CHG'D BY
UNIT	mm	DRA'N BY	DES'D BY	CHK'D BY	APP'D BY		
SCALE	1/1		J.H.WON	H.S.KIM	Y.B.CHU	MODEL NAME	LTN121XJ-L03
TOLERANCE LEVEL 3		. .	'02.07.29	'02.07.29	'02.07.29	PART/SHEET NAME	OUTLINE DIMENSION — SHEET 1/1
					SPEC. NO		
SAMSUNG ELECTRONICS						CODE NO.	VER. 000