SAMSUNG ELECTRONICS

Approval

LEAD-FREE

TO : General

DATE : Apr. 20. 2009

SAMSUNG TFT-LCD

MODEL NO : LTN173KT01-C01

NOTE : Extension code [-C01]

→ LTN173KT01-C01

Surface type [Glare]

The information described in this SPEC is preliminary and can be changed without prior notice.

APPROVED BY : K. H. Shin

PREPARED BY :

LCD DEVELOPMENT G1. MOBILE DIVISION

SAMSUNG ELECTRONICS CO., LTD.

wise view™

Approval

CONTENTS

Revision History ----------(3)

General Description ----------(4)

1. Absolute Maximum Ratings ----------(5)
   1.1 Absolute Ratings of environment
   1.2 Electrical Absolute Ratings

2. Optical Characteristics ----------(7)

3. Electrical Characteristics ----------(10)
   3.1 TFT LCD Module
   3.2 Backlight Unit
   3.3 LED Driver

4. Block Diagram ----------(13)
   4.1 TFT LCD Module

5. Input Terminal Pin Assignment ----------(14)
   5.1 Input Signal & Power
   5.2 LVDS Interface
   5.3 Timing Diagrams of LVDS For Transmitting
   5.4 Input Signals, Basic Display Colors and Gray Scale of Each Color.
   5.5 Pixel format

6. Interface Timing ----------(19)
   6.1 Timing Parameters
   6.2 Timing Diagrams of interface Signal
   6.3 Power ON/OFF Sequence

7. Outline Dimension ----------(22)

8. Packing ----------(24)

9. Markings & Others ----------(25)

10. General Precautions ----------(27)

11. EDID ----------(29)

REVISION HISTORY

Approval

Date	Revision No.	Page	Summary
Nov. 25. 2008	P00	All	LTN173KT01-C01 model Preliminary spec was issued first.
Feb. 11. 2008	P01	14 22 25	LED connection and placement was updated. (6 x 10) Power on/off Sequence (additional signal → PWM, EN) Packing SPEC (weight, volume, size) was changed.
Apr. 20. 2009	A00	All	The Approval SPEC is released.

GENERAL DESCRIPTION

DESCRIPTION

LTN173KT01-C01 is a color active matrix TFT (Thin Film Transistor) liquid crystal display (LCD) that uses amorphous silicon TFT as switching devices. This model is composed of a TFT LCD panel, a driver circuit and a backlight system. The resolution of a 17.3" contains 1600 x 900 pixels and can display up to 262,144 colors. 6 O'clock direction is the Optimum viewing angle.

FEATURES

- Thin and light weight
- High contrast ratio, high aperture structure
- 1600 x 900 pixels resolution (16:9)
- Fast Response Time
- Low power consumption
- LED BLU Structure
- DE (Data enable) only mode
- 3.3V LVDS Interface
- On board EDID chip
- Pb-free product

APPLICATIONS

- Notebook PC
- If the usage of this product is not for PC application, but for others, please contact SEC

GENERAL INFORMATION

Item	Specification	Unit	Note
Display area	382.08 (H) x 214.92 (V) (17.3 ”diagonal)	mm	
Driver element	a-Si TFT active matrix		
Display colors	262,144		
Number of pixel	1600 x 900	pixel	16 : 9
Pixel arrangement	RGB vertical stripe		
Pixel pitch	0.2388 (H) x 0.2388 (V) (TYP.)	mm	
Display Mode	Normally white		
Surface treatment	Haze 0, Hardness 3H		Glare

Mechanical Information

Item		Min.	Typ.	Max.	Unit	Note
Module size	Horizontal (H)	397.6	398.1	398.6	mm	
	Vertical (V)	232.3	232.8	233.3	mm	
	Depth (D)	-	-	5.8	mm	(1)
Weight		-	540	570	g	

Note (1) Measurement condition of outline dimension
. Equipment : Vernier Calipers
. Push Force : 500g ·f (minimum)

1. ABSOLUTE MAXIMUM RATINGS

1.1 ENVIRONMENTAL ABSOLUTE RATINGS

Item	Symbol	Min.	Max.	Unit	Note
Storage temperate	TSTG	-20	60	°C	(1)
Operating temperate (Temperature of glass surface)	TOPR	0	50	°C	(1)
Shock (non-operating)	Snop	-	240	G	(2),(4)
Vibration (non-operating)	Vnop	-	2.41	G	(3),(4)

Note (1) Temperature and relative humidity range are shown in the figure below.
95 % RH Max. (40 °C ≥ Ta)
Maximum wet - bulb temperature at 39 ^{O}C or less. (Ta > 40 °C) No condensation

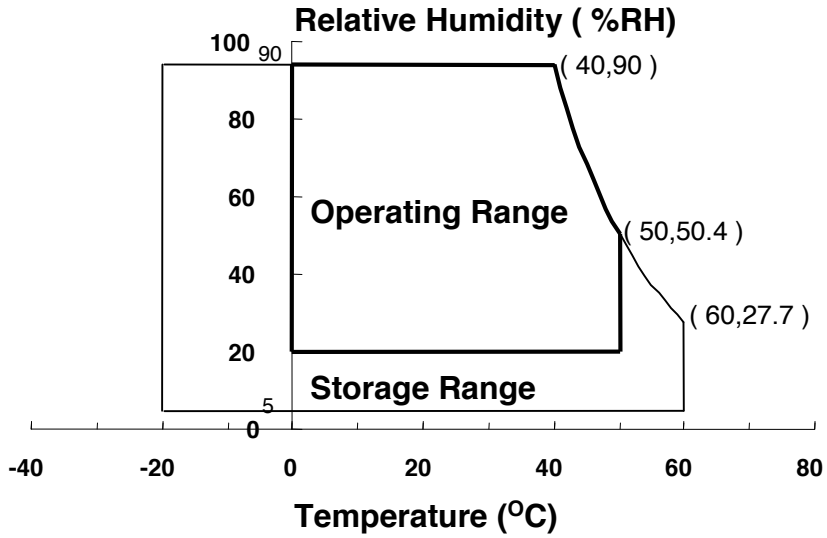

(2) 2ms, half sine wave, one time for ±X, ±Y, ± Z.
(3) 5 - 500 Hz, random vibration, 30min for X, Y, Z.
(4) At testing Vibration and Shock, the fixture in holding the Module to be tested have to be hard and rigid enough so that the Module would not be twisted or bent by the fixture.

1.2 ELECTRICAL ABSOLUTE RATINGS

(1) TFT LCD MODULE

V_{DD} =3.3V, V_{SS} = GND = 0V

Item	Symbol	Min.	Max.	Unit	Note
Power Supply Voltage	V_{DD}	V_{DD} – 0.3	V_{DD} + 0.3	V	(1)
Logic Input Voltage	V_{DD}	V_{DD} – 0.3	V_{DD} + 0.3	V	(1)

Note (1) Within Ta (25 ± 2 °C)

2. OPTICAL CHARACTERISTICS

The following items are measured under stable conditions. The optical characteristics should be measured in a dark room or equivalent state with the methods shown in Note (5). Measuring equipment : TOPCON SR-3

* Ta=25 ± 2°C, V_{DD}=3.3V, fv= 60Hz, f_{DCLK} = 53.92MHz, I_L = 20mA

Item		Symbol	Condition	Min.	Typ.	Max	Unit	Note
Contrast Ratio (5 Points)		CR	Normal Viewing Angle $\phi = 0$ $\theta = 0$	400	600	-	-	(1), (2), (5)
Response Time at Ta (Rising + Falling)		T_{RT}		-	8	-	msec	(1), (3)
Average Luminance of White (5 Points)		$Y_{L,AVE}$		185	220	-	cd/m^2	I_L=20mA (1), (4)
Color Chromaticity (CIE)	Red	R_X		0.584	0.614	0.644	-	
		R_Y		0.316	0.356	0.386		
	Green	G_X		0.292	0.325	0.352		
		G_Y		0.574	0.604	0.634		
	Blue	B_X		0.126	0.156	0.186		
		B_Y		0.062	0.092	0.122		
	White	W_X		0.283	0.313	0.343		
		W_Y		0.299	0.329	0.359		
Viewing Angle	Hor.	θ_L	CR ≥ 10	40	-	-	Degrees	(1), (5) SR-3
		θ_R		40	-	-		
	Ver.	ϕ_H		15	-	-		
		ϕ_L		30	-	-		
Color Gamut				-	60	-	%	
13 Points White Variation		δ_L		-	-	1.7	-	(6)

Note 1) Definition of Viewing Angle : Viewing angle range(10 ≤ C/R)

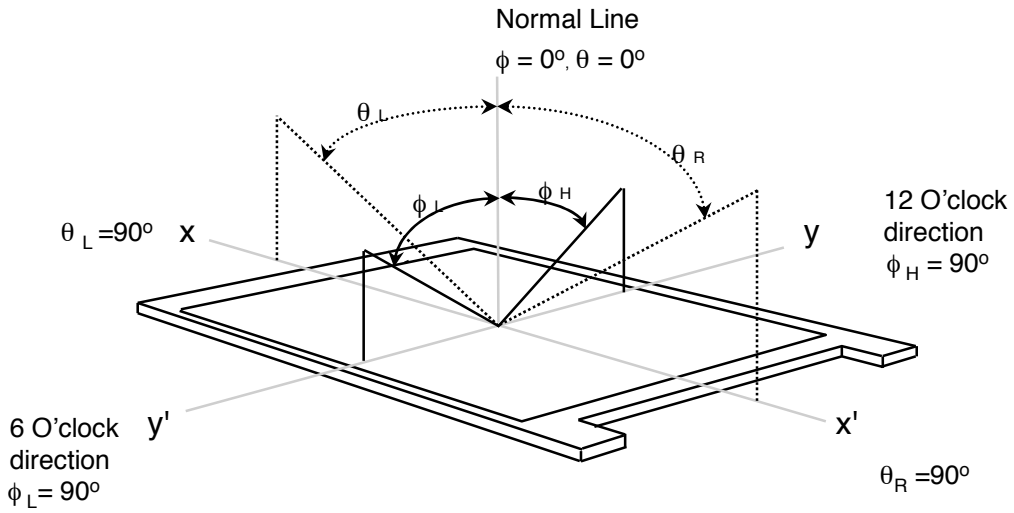

Note 2) Definition of Contrast Ratio (CR) : Ratio of gray max (Gmax) ,gray min (Gmin) at 5 points(4, 5, 7, 9, 10)

$$CR = \frac{CR(4) + CR(5) + CR(7) + CR(9) + CR(10)}{5}$$

Points : ④ , ⑤ , ⑦ , ⑨ , ⑩ at the figure of Note (6).

Note 3) Definition of Response time :

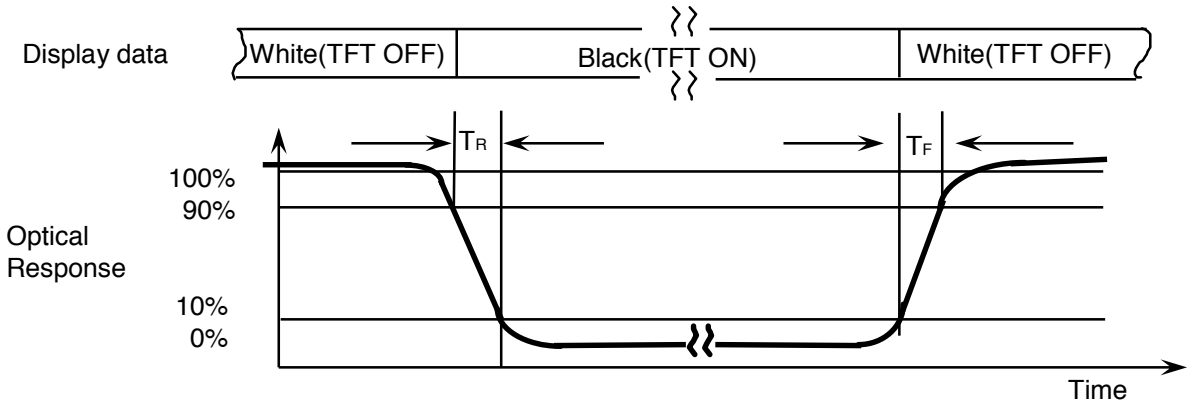

Note 4) Definition of Average Luminance of White : measure the luminance of white at 5 points.

Average Luminance of White ($Y_{L,AVE}$)

$$Y_{L,AVE} = \frac{Y_{L4} + Y_{L5} + Y_{L7} + Y_{L9} + Y_{L10}}{5}$$

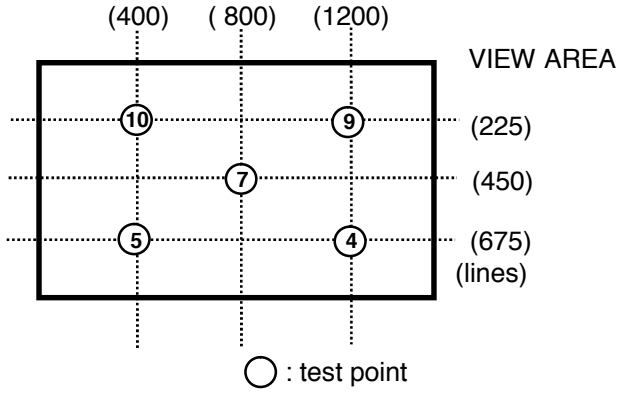

Note 5) After stabilizing and leaving the panel alone at a given temperature for 30 min , the measurement should be executed. Measurement should be executed in a stable, windless,and dark room.
30 min after lighting the backlight. This should be measured in the center of screen.
LED current : TBD mA
Environment condition : Ta = 25 ± 2 °C

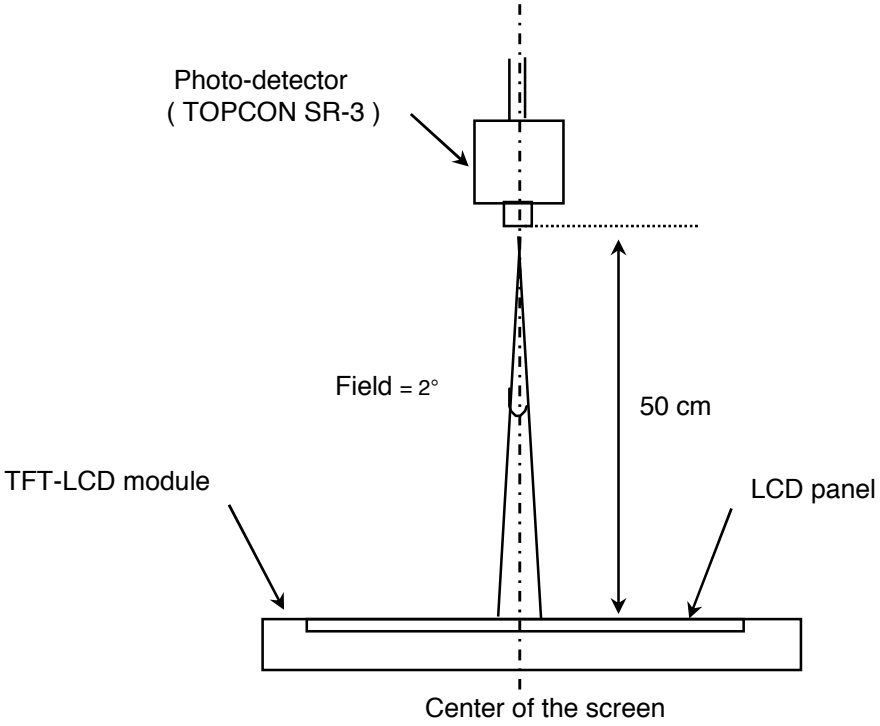

[Optical characteristics measurement setup]

Note 6) Definition of 13 points white variation (δ_L), [① ~ ⑬]

$$\delta_L = \frac{\text{Maximum luminance of 13 points}}{\text{Minimum luminance of 13 points}}$$

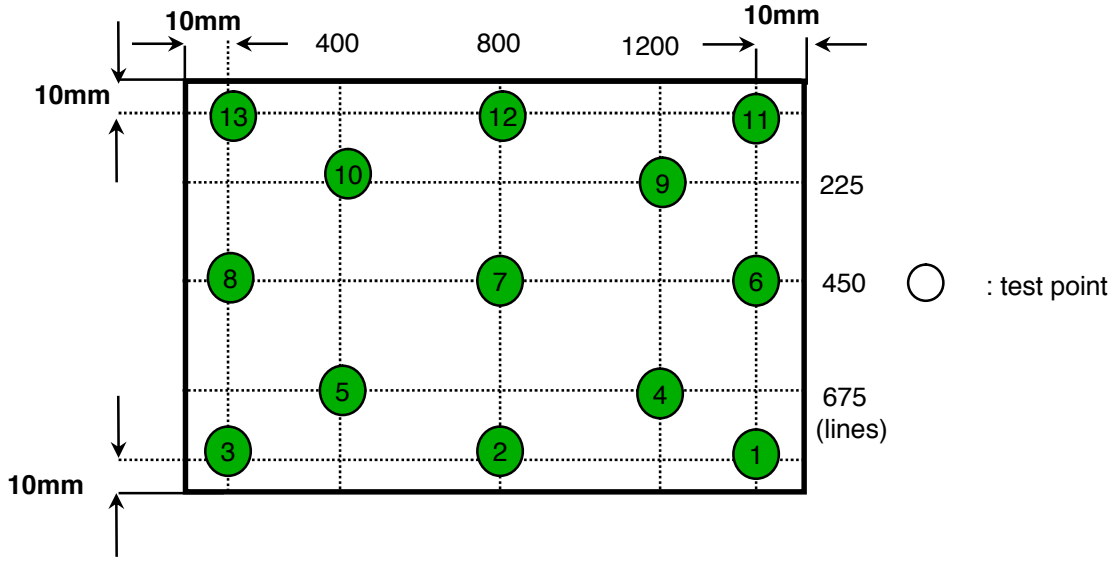

3. ELECTRICAL CHARACTERISTICS

Approval

3.1 TFT LCD MODULE

Ta= 25 ± 2°C

Item		Symbol	Min.	Typ.	Max.	Unit	Note
Voltage of Power Supply		V_{DD}	3.0	3.3	3.6	V	
Differential Input Voltage for LVDS Receiver Threshold	High	V_{IH}	-	-	+100	mV	V_{CM} = +1.2V
	Low	V_{IL}	-100	-	-	mV	
Vsync Frequency		fv	-	60	-	Hz	
Hsync Frequency		f_H	-	57	-	KHz	
Main Frequency		f_{DCLK}	-	53.92	-	MHz	
Rush Current		I_{RUSH}	-	-	(1.5)	A	(4)
Current of Power Supply	White	I_{DD}	-	450	-	mA	(2),(3)*a
	Mosaic		-	600	-	mA	(2),(3)*b
	V. Stripe		-	730	860	mA	(2),(3)*c

Note (1) Display data pins and timing signal pins should be connected.(GND = 0V)

(2) f_V = 60Hz, f_{DCLK} = 53.92 MHz, V_{DD} = 3.3V , DC Current.

(3) Power dissipation pattern

*a) White Pattern

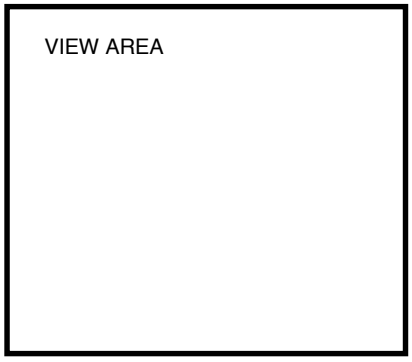

*b) Mosaic Pattern

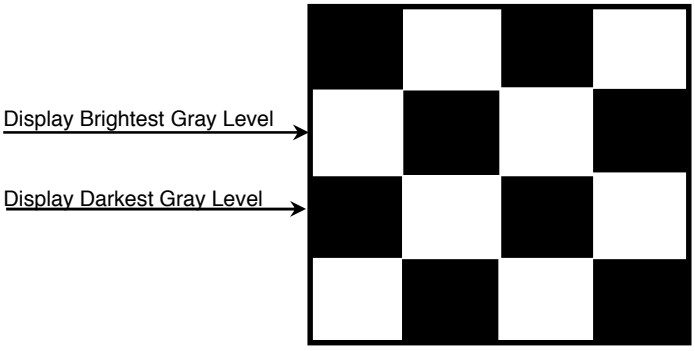

*c) 1dot Vertical stripe pattern

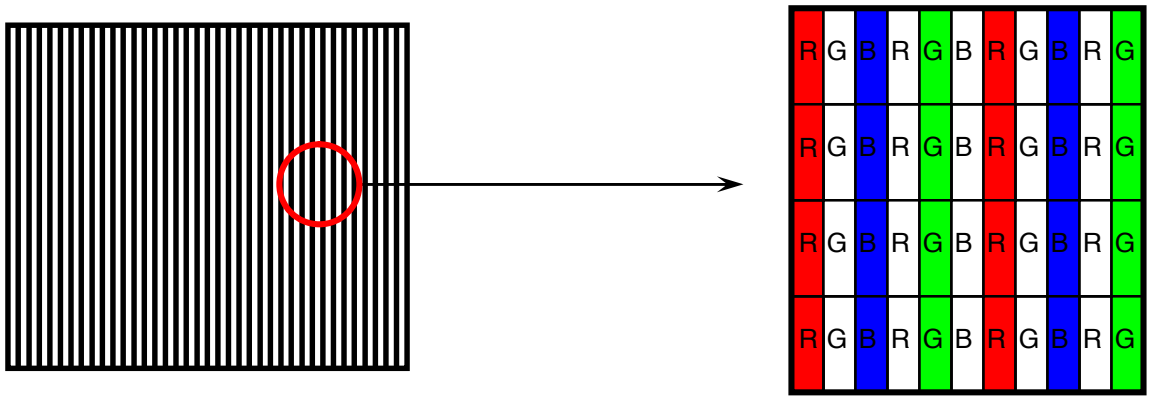

4) Rush current measurement condition

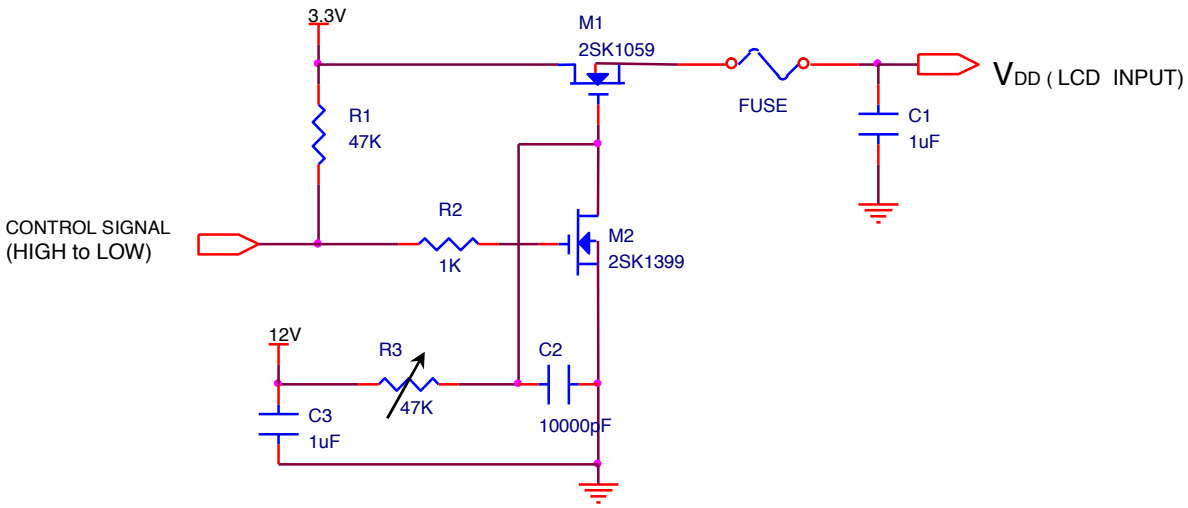

VDD rising time is 470us

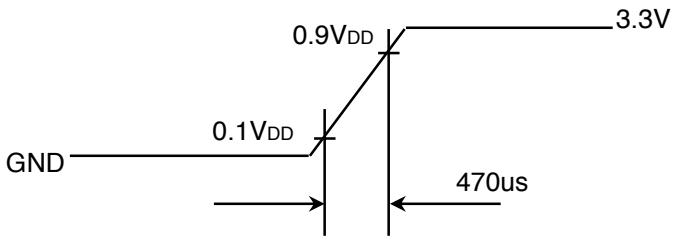

3.2 BACK-LIGHT UNIT

Ta= 25 ± 2 °C

Item	Symbol	Min.	Typ.	Max.	Unit	Note
LED Forward Current	IF	-	-	30	mA	
LED Forward Voltage	VF	3.0	-	3.4	V	IF=20mA
LED Array Voltage	VP	27.0	-	30.6	V	VF X 10 LEDs (IF=20mA)
Power Consumption	P	4.3	-	4.9	W	IF X VF X 60 LEDs (w/o Converter) (IF=20mA)

3.3 LED Driver

- LED Driver Manufacturer : RICHTEK

Ta= 25 ± 2 °C

Item	Symbol	Min.	Typ.	Max.	Unit	Note
Input Voltage	V_{in}	7.5	12	21	V	
Input Current	I	390	430	470	mA	
Input Power	P_{in}	4.7	5	5.7	W	$P_{in} = V_{in} \times I$
Operating Frequency	F_o	0.8	1	1.2	MHz	
Output PWM Frequency	F_{PWM}	0.1	-	10	KHz	
Burst Ratio	D	5	-	100	%	
External PWM Dimming Control Frequency (BLIM)	F_{BLIM}	0.1	-	10	KHz	V_{in}=7.5~21V, BLIM=PWM 0V~3.3V
Output Current (each LED string)	I_{out}	19	20	21	mA	V_{in}=7.5~21V, BLIM=100% ALC=0V, ISET=4.75KΩ
Output Power	P_{out}	-	4	4.5	W	BLIM=100% $P_{out}=I_{out}$X3.3X60ea
Efficiency	η	-	80	-	%	BLIM=100%

Note - Test Equipment : Fluke 45

4. BLOCK DIAGRAM

4.1 TFT LCD Module

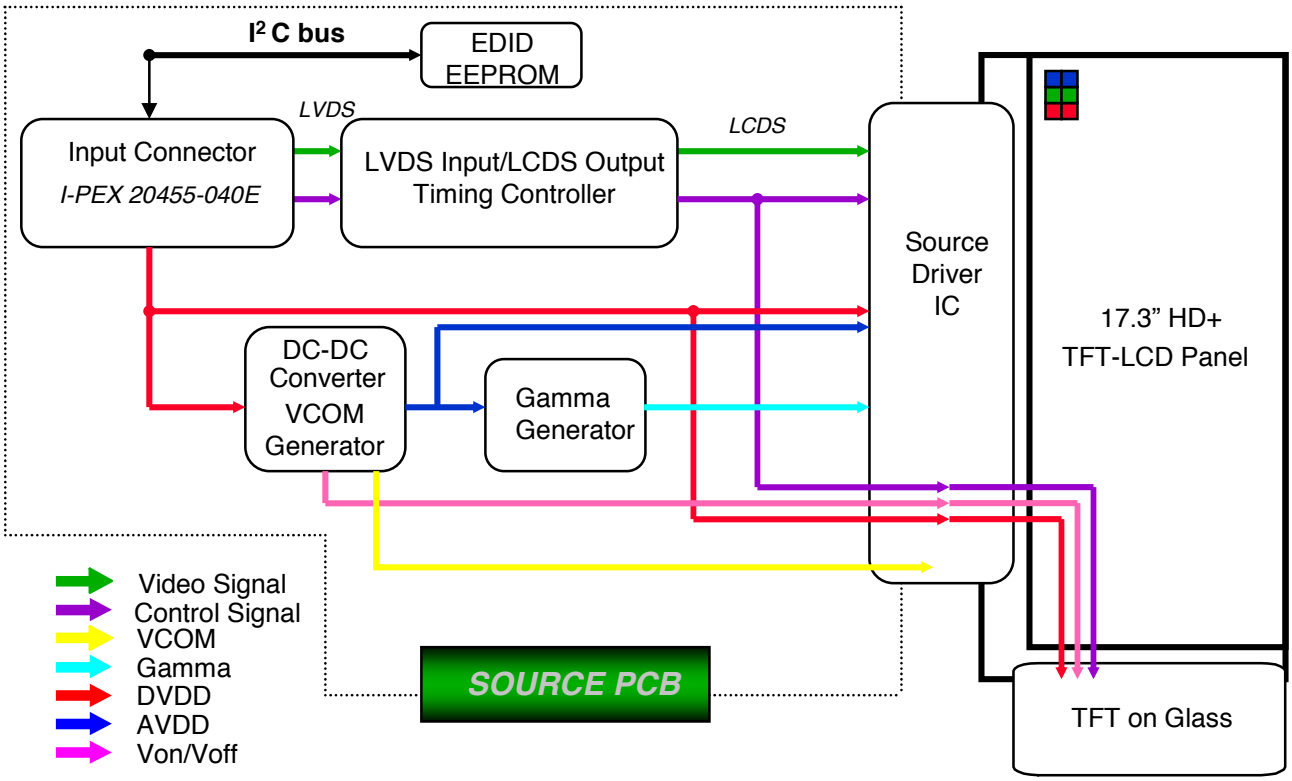

4. BLOCK DIAGRAM

4.2 LED connection and placement

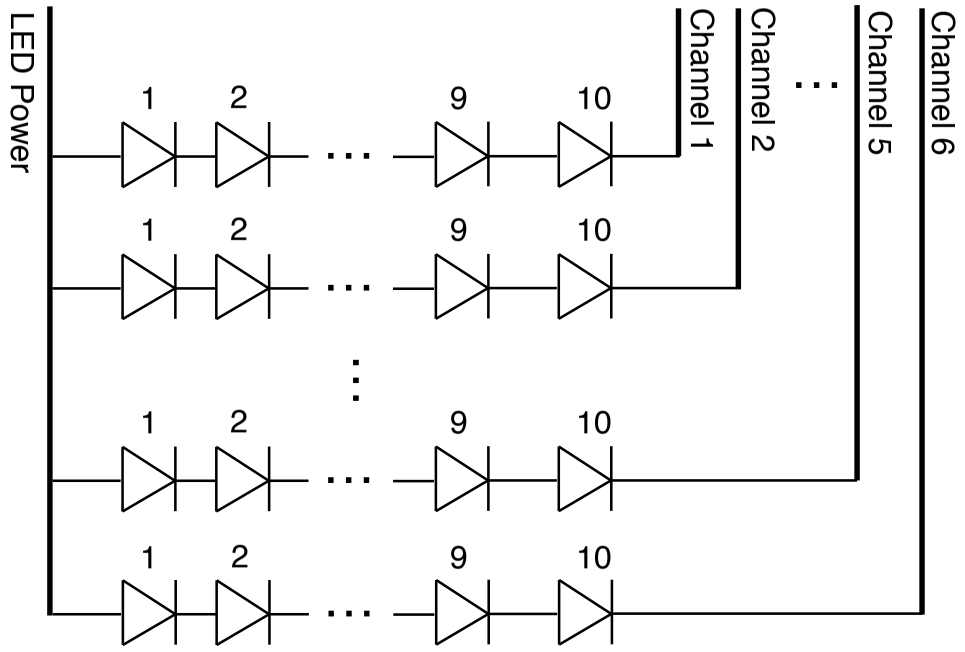

LED Wiring

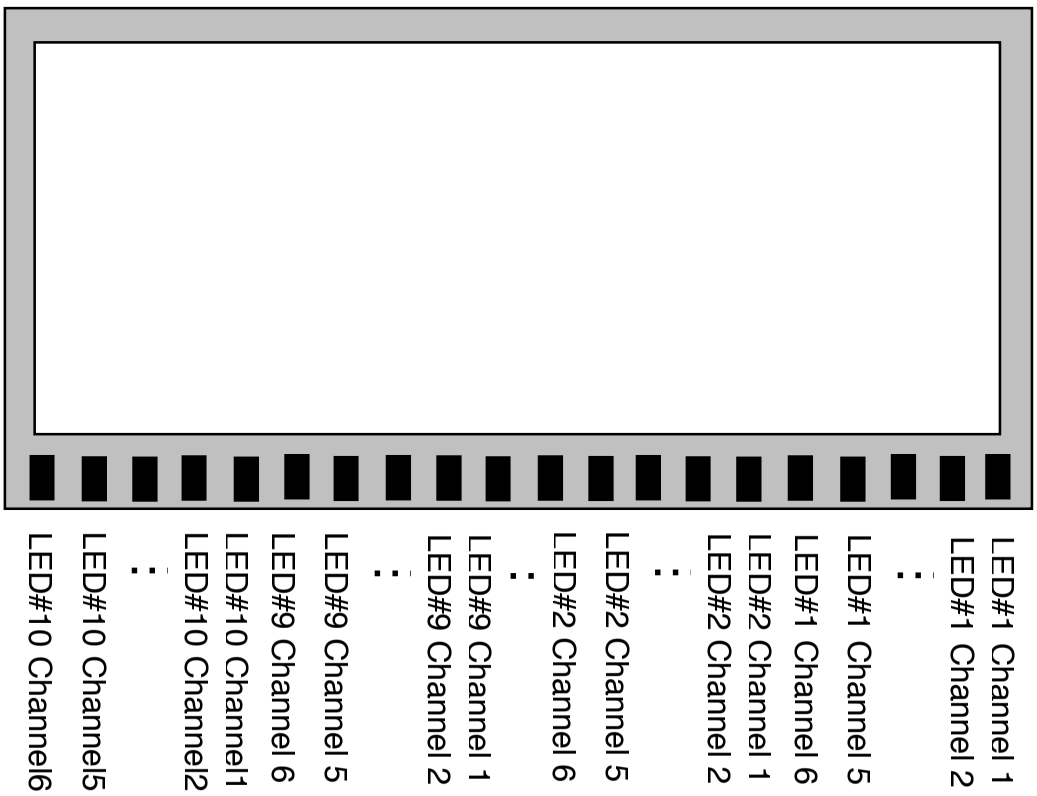

LED Placement

5. INPUT TERMINAL PIN ASSIGNMENT

5.1. Input Signal & Power (LVDS, Connector : I-PEX 20455-040E)

PIN #	Symbol	Description
1	NC	
2	VDD	Power Supply, 3.3 V (typical)
3	VDD	Power Supply, 3.3 V (typical)
4	V EEDID	DDC 3.3V power
5	NC	
6	Clk EEDID	DDC Clock
7	DATA EEDID	DDC Data
8	Odd_Rin0-	- LVDS differential data input (R0-R5, G0) (odd pixels)
9	Odd_Rin0+	+ LVDS differential data input (R0-R5, G0) (odd pixels)
10	VSS	Ground – Shield
11	Odd_Rin1-	- LVDS differential data input (G1-G5, B0-B1) (odd pixels)
12	Odd_Rin1+	+ LVDS differential data input (G1-G5, B0-B1) (odd pixels)
13	VSS	Ground – Shield
14	Odd_Rin2-	- LVDS differential data input (B2-B5, HS, VS, DE) (odd pixels)
15	Odd_Rin2+	+ LVDS differential data input (B2-B5, HS, VS, DE) (odd pixels)
16	VSS	Ground – Shield
17	Odd_ClkIN-	- LVDS differential clock input (odd pixels)
18	Odd_ClkIN+	+ LVDS differential clock input (odd pixels)
19	VSS	Ground – Shield
20	Even_Rin0-	- LVDS differential data input (R0-R5, G0) (even pixels)
21	Even_Rin0+	+ LVDS differential data input (R0-R5, G0) (even pixels)
22	VSS	Ground – Shield
23	Even_Rin1-	- LVDS differential data input (G1-G5, B0-B1) (even pixels)
24	Even_Rin1+	+ LVDS differential data input (G1-G5, B0-B1) (even pixels)
25	VSS	Ground – Shield

5. INPUT TERMINAL PIN ASSIGNMENT

5.1. Input Signal & Power (LVDS, Connector : I-PEX 20455-040E)

PIN #	Symbol	Description
26	Even_Rin2-	- LVDS differential data input (B2-B5, HS, VS, DE) (even pixels)
27	Even_Rin2+	+ LVDS differential data input (B2-B5, HS, VS, DE) (even pixels)
28	VSS	Ground – Shield
29	Even_ClkIN-	- LVDS differential clock input (even pixels)
30	Even_ClkIN+	+ LVDS differential clock input (even pixels)
31	VSSLED	Ground – LED
32	VSSLED	Ground – LED
33	VSSLED	Ground – LED
34	NC	
35	PWM	System PWM Signal Input (+3.3V Swing)
36	LED_EN	LED enable pin (+3.3V Input)
37	NC	NC
38	VDDLED	7.5V – 21V LED power
39	VDDLED	7.5V – 21V LED power
40	VDDLED	7.5V – 21V LED power

5.2 LVDS Interface : Transmitter DS90CF363 or Compatible

Pin No.	Name	RGB Signal	Pin No.	Name	RGB Signal
51	TxIN0	R0	14	TxIN14	G5
52	TxIN1	R1	15	TxIN15	B0
54	TxIN2	R2	19	TxIN18	B1
55	TxIN3	R3	20	TxIN19	B2
56	TxIN4	R4	22	TxIN20	B3
3	TxIN6	R5	23	TxIN21	B4
4	TxIN7	G0	24	TxIN22	B5
6	TxIN8	G1	27	TxIN24	Hsync
7	TxIN9	G2	28	TxIN25	Vsync
11	TxIN12	G3	30	TxIN26	DE
12	TxIN13	G4	31	TxCLKIN	Clock

LVDS INTERFACE

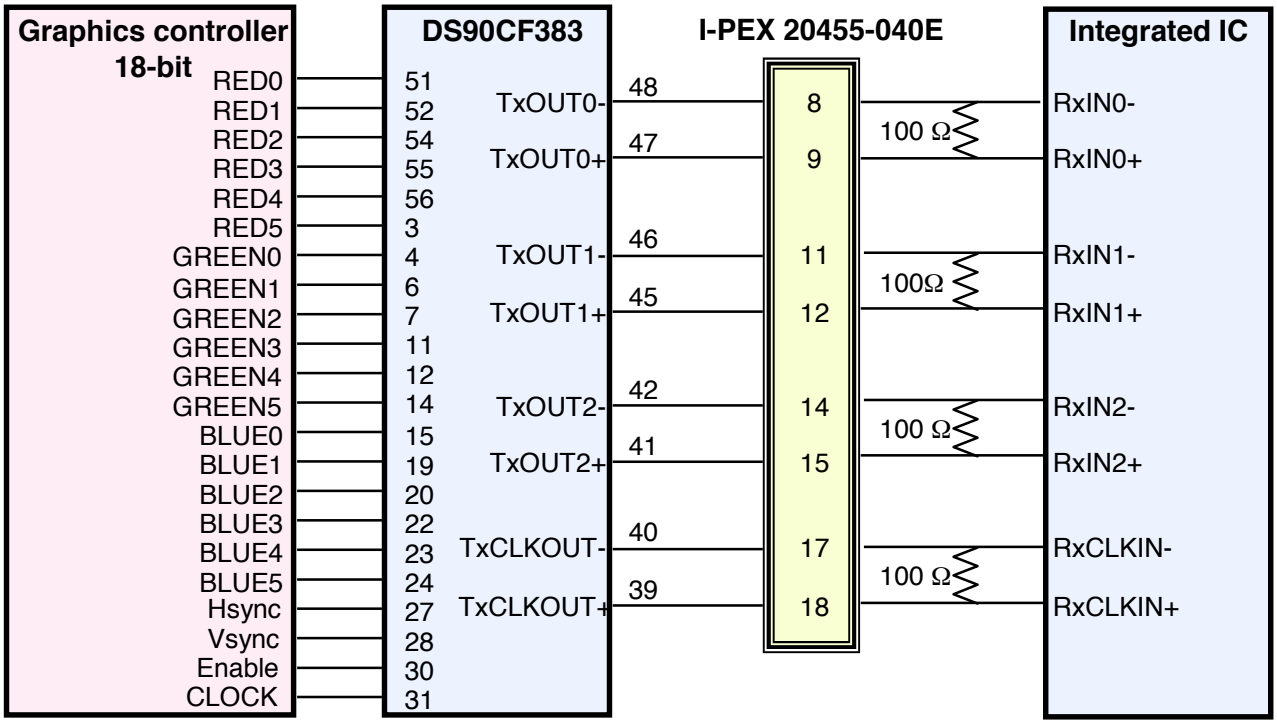

Note : The LCD Module uses a 100ohm resistor between positive and negative lines of each receiver input.

5.3 Timing Diagrams of LVDS For Transmission

LVDS Receiver : Integrated T-CON

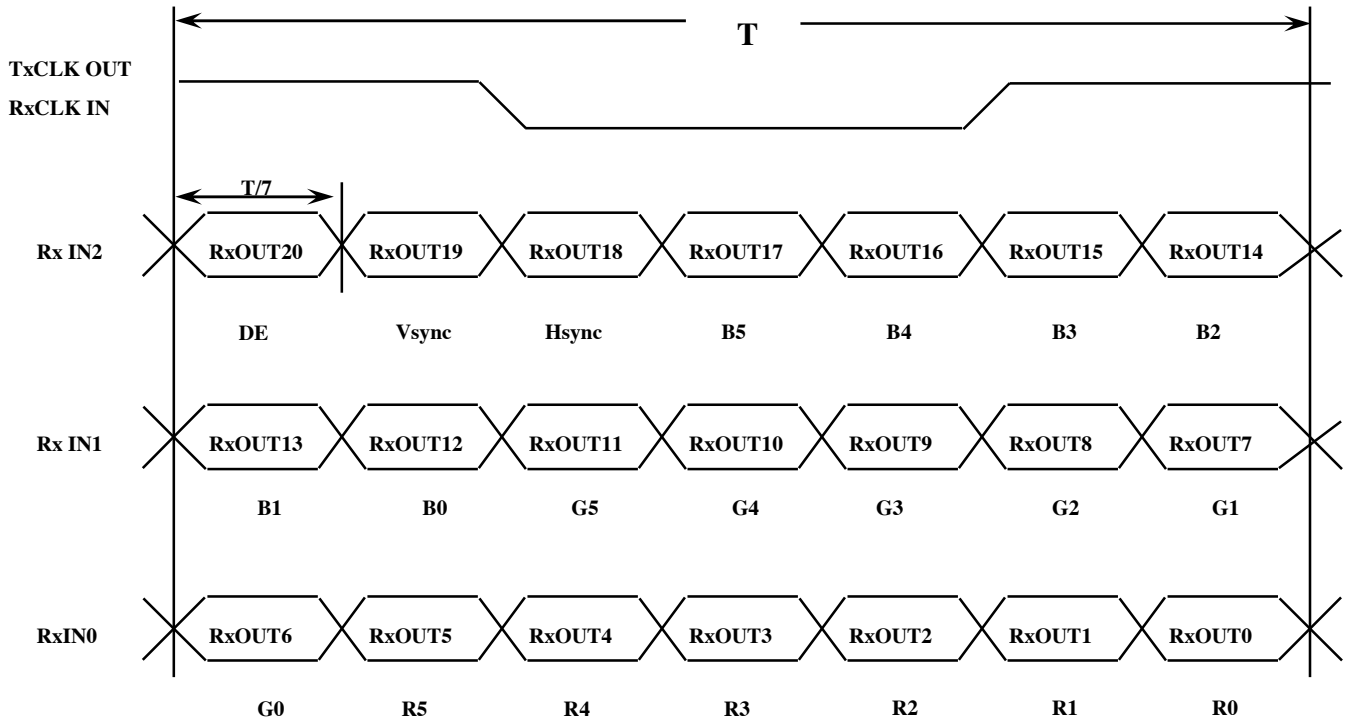

5.4 Input Signals, Basic Display Colors and Gray Scale of Each Color

Color	Display	Data Signal																		Gray Scale Level
		Red						Green						Blue						
		R0	R1	R2	R3	R4	R5	G0	G1	G2	G3	G4	G5	B0	B1	B2	B3	45	B5	
Basic Colors	Black	0	0	0	0	0	0	0	0	0	0	0	0	0	0	0	0	0	0	-
	Blue	0	0	0	0	0	0	0	0	0	0	0	0	1	1	1	1	1	1	-
	Green	0	0	0	0	0	0	1	1	1	1	1	1	0	0	0	0	0	0	-
	Cyan	0	0	0	0	0	0	1	1	1	1	1	1	1	1	1	1	1	1	-
	Red	1	1	1	1	1	1	0	0	0	0	0	0	0	0	0	0	0	0	-
	Magenta	1	1	1	1	1	1	0	0	0	0	0	0	1	1	1	1	1	1	-
	Yellow	1	1	1	1	1	1	1	1	1	1	1	1	0	0	0	0	0	0	-
	White	1	1	1	1	1	1	1	1	1	1	1	1	1	1	1	1	1	1	-
Gray Scale Of Red	Black	0	0	0	0	0	0	0	0	0	0	0	0	0	0	0	0	0	0	R0
	Dark	1	0	0	0	0	0	0	0	0	0	0	0	0	0	0	0	0	0	R1
	↑	0	1	0	0	0	0	0	0	0	0	0	0	0	0	0	0	0	0	R2
	:	:	:	:	:	:	:	:	:	:	:	:	:	:	:	:	:	:	:	R3~R60
	:	:	:	:	:	:	:	:	:	:	:	:	:	:	:	:	:	:	:	
	↓	1	0	1	1	1	1	0	0	0	0	0	0	0	0	0	0	0	0	R61
	Light	0	1	1	1	1	1	0	0	0	0	0	0	0	0	0	0	0	0	R62
	Red	1	1	1	1	1	1	0	0	0	0	0	0	0	0	0	0	0	0	R63
Gray Scale Of Green	Black	0	0	0	0	0	0	0	0	0	0	0	0	0	0	0	0	0	0	G0
	Dark	0	0	0	0	0	0	1	0	0	0	0	0	0	0	0	0	0	0	G1
	↑	0	0	0	0	0	0	0	1	0	0	0	0	0	0	0	0	0	0	G2
	:	:	:	:	:	:	:	:	:	:	:	:	:	:	:	:	:	:	:	G3~G60
	:	:	:	:	:	:	:	:	:	:	:	:	:	:	:	:	:	:	:	
	↓	0	0	0	0	0	0	1	0	1	1	1	1	0	0	0	0	0	0	G61
	Light	0	0	0	0	0	0	0	1	1	1	1	1	0	0	0	0	0	0	G62
	Green	0	0	0	0	0	0	1	1	1	1	1	1	0	0	0	0	0	0	G63
Gray Scale Of Blue	Black	0	0	0	0	0	0	0	0	0	0	0	0	0	0	0	0	0	0	B0
	Dark	0	0	0	0	0	0	0	0	0	0	0	0	1	0	0	0	0	0	B1
	↑	0	0	0	0	0	0	0	0	0	0	0	0	0	1	0	0	0	0	B2
	:	:	:	:	:	:	:	:	:	:	:	:	:	:	:	:	:	:	:	B3~B60
	:	:	:	:	:	:	:	:	:	:	:	:	:	:	:	:	:	:	:	
	↓	0	0	0	0	0	0	0	0	0	0	0	0	1	0	1	1	1	1	B61
	Light	0	0	0	0	0	0	0	0	0	0	0	0	0	1	1	1	1	1	B62
	Blue	0	0	0	0	0	0	0	0	0	0	0	0	1	1	1	1	1	1	B63

Note 1) Definition of gray :
Rn: Red gray, Gn: Green gray, Bn: Blue gray (n=gray level)
Note 2)Input signal: 0 =Low level voltage, 1=High level voltage

5.5 Pixel Format in the display

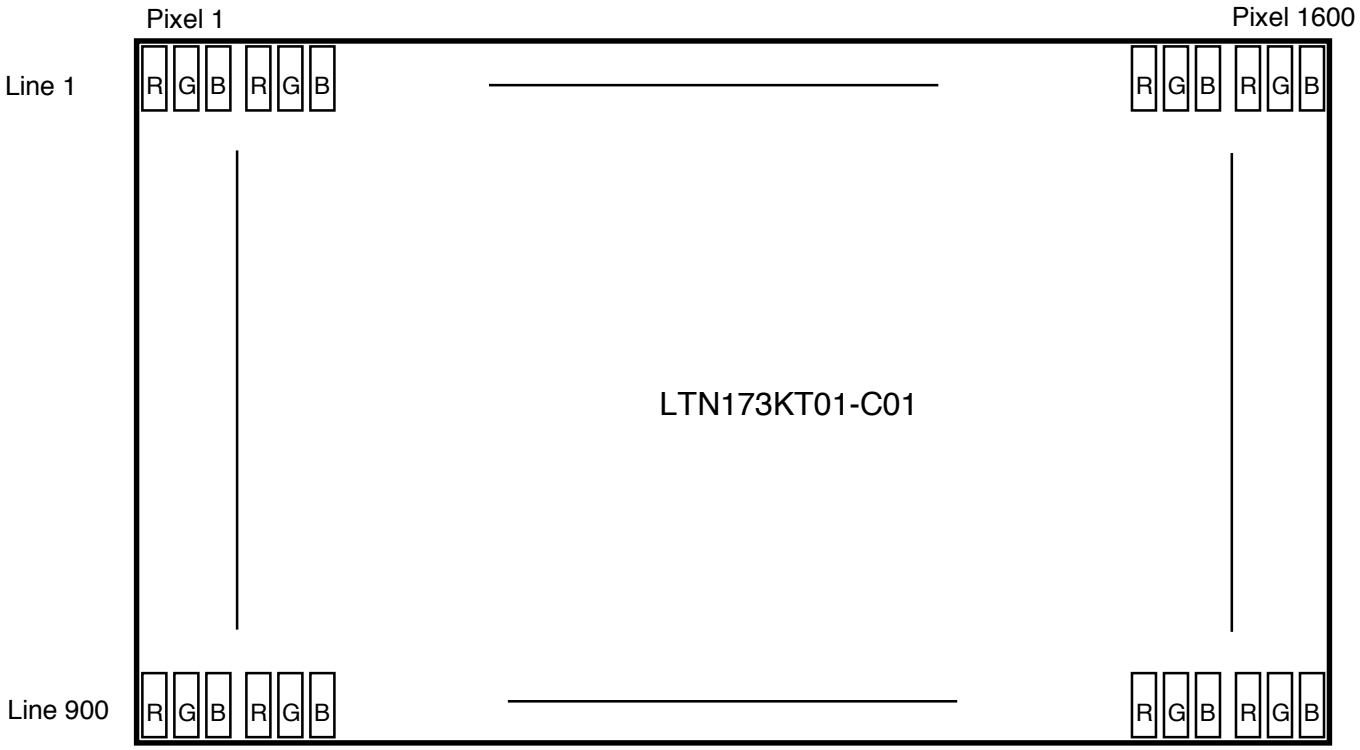

6. INTERFACE TIMING

6.1 Timing Parameters

Signal	Item	Symbol	Min.	Typ.	Max.	Unit	Note
Frame Frequency	Cycle	TV	905	950	-	Lines	-
Vertical Active Display Term	Display Period	TVD	-	900	-	Lines	-
One Line Scanning Time	Cycle	TH	838	946	1050	Clocks	2ch
Horizontal Active Display Term	Display Period	THD	-	800	-	Clocks	2ch

6.2 Timing diagrams of interface signal

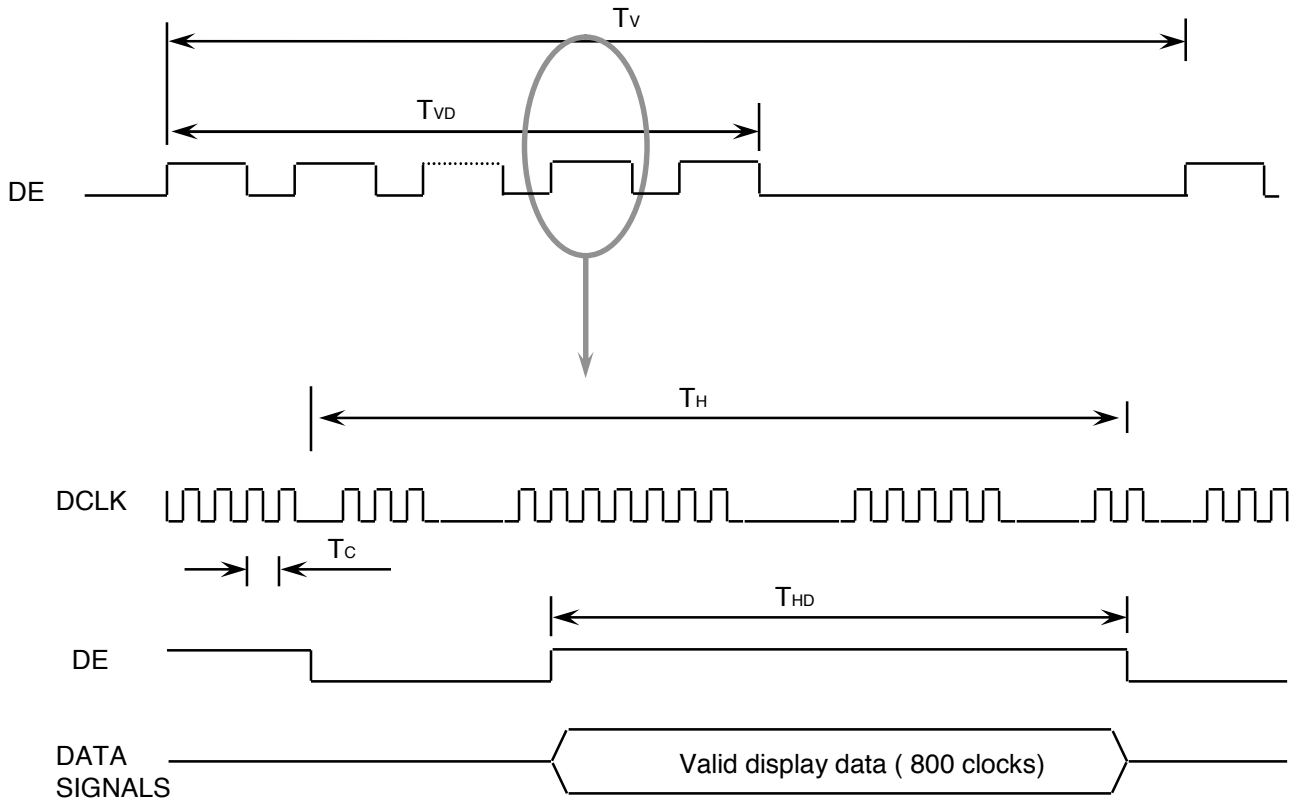

6.3 Power ON/OFF Sequence

: To prevent a latch-up or DC operation of the LCD module, the power on/off sequence should be as the diagram below.

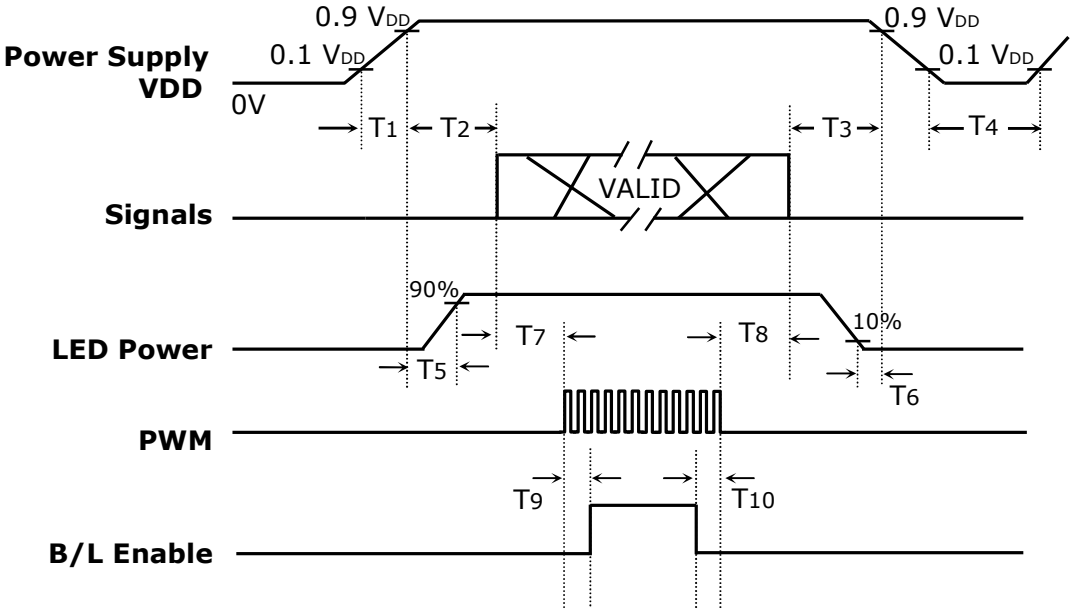

Power ON/OFF Sequence

Timing (ms)	Remarks
$0.5 < T_1 \leq 10$	V_{DD} rising time from 10% to 90%
$0 < T_2 \leq 50$	Delay from V_{DD} to valid data at power ON
$0 < T_3 \leq 50$	Delay from valid data OFF to V_{DD} off at power OFF
$500 \leq T_4$	V_{DD} OFF time for Windows restart
$0 < T_5 \leq T_2$	Delay from V_{DD} ON to LED driver power ON
$0 < T_6 \leq T_3$	Delay from LED driver power OFF to V_{DD} OFF
$0 < T_7$	Delay from valid data to PWM ON
$0 < T_8$	Delay from PWM OFF to valid data OFF
$0 < T_9$	Delay from PWM ON to B/L Enable ON
$0 < T_{10}$	Delay from B/L Enable Off to PWM OFF

Power Sequence & Timing Parameters

NOTE.

(1) The supply voltage of the external system for the module input should be the same as the definition of VDD.

(2) Apply the B/L operation voltage within the LCD operation range. When the back-light turns on before the LCD operation or the LCD turns off before the back-light turns off, the display may momentarily become white.

(3) In case of VDD = off level, please keep the level of input signals on the low or keep a high impedance.

(4) T4 should be measured after the module has been fully discharged between power off and on period.

(5) Interface signal shall not be kept at high impedance when the power is on.

(6) EN must be turned on late than VDD and PWM signal.
EN must be turned off early than VDD and and PWM signal.

7. MECHANICAL OUTLINE DIMENSION

Approval

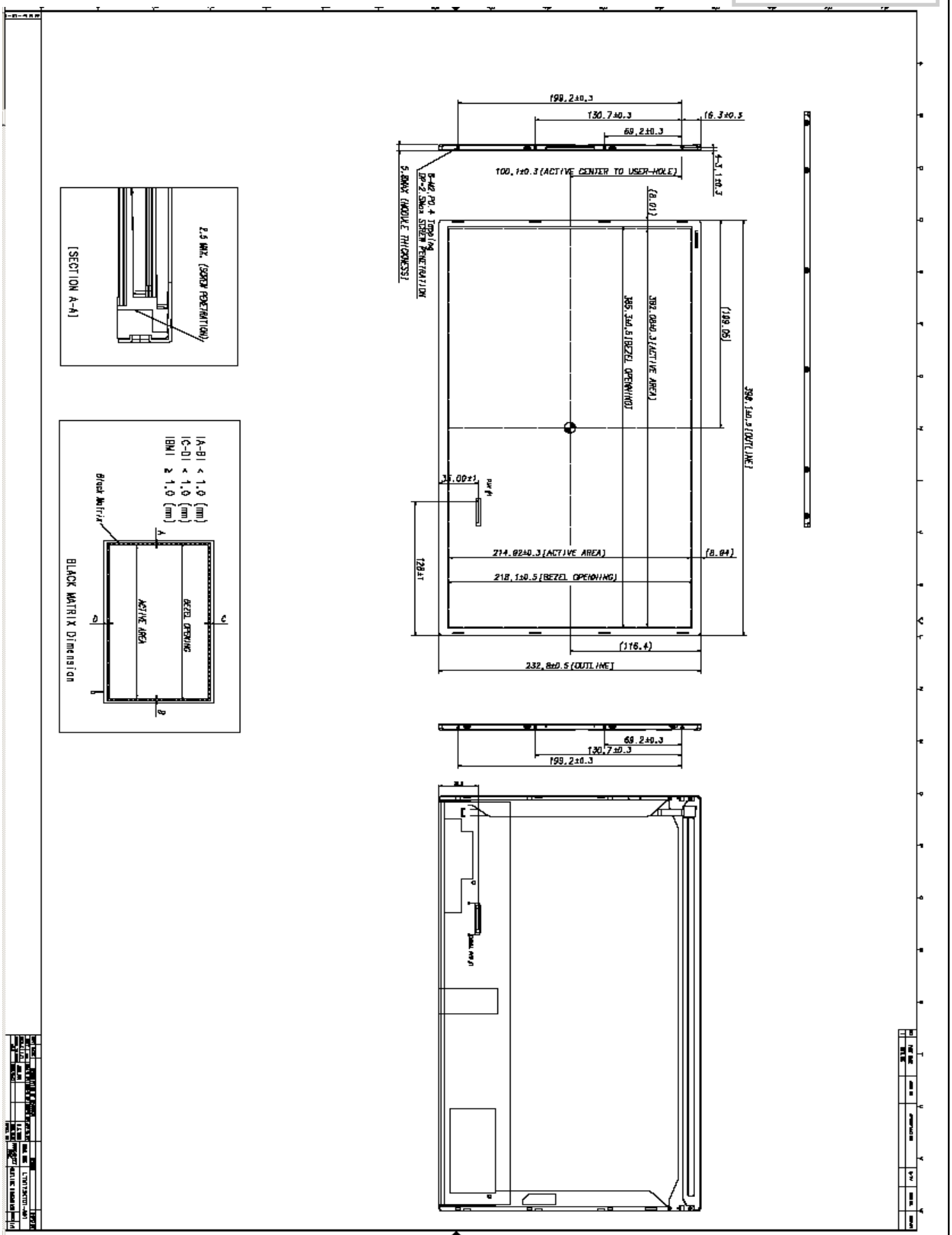

8. PACKING

Approval

1. CARTON(Internal Package)

(1) Packing Form
Corrugated Cardboard box and EPS CUSHION form as shock absorber

(2) Packing Method

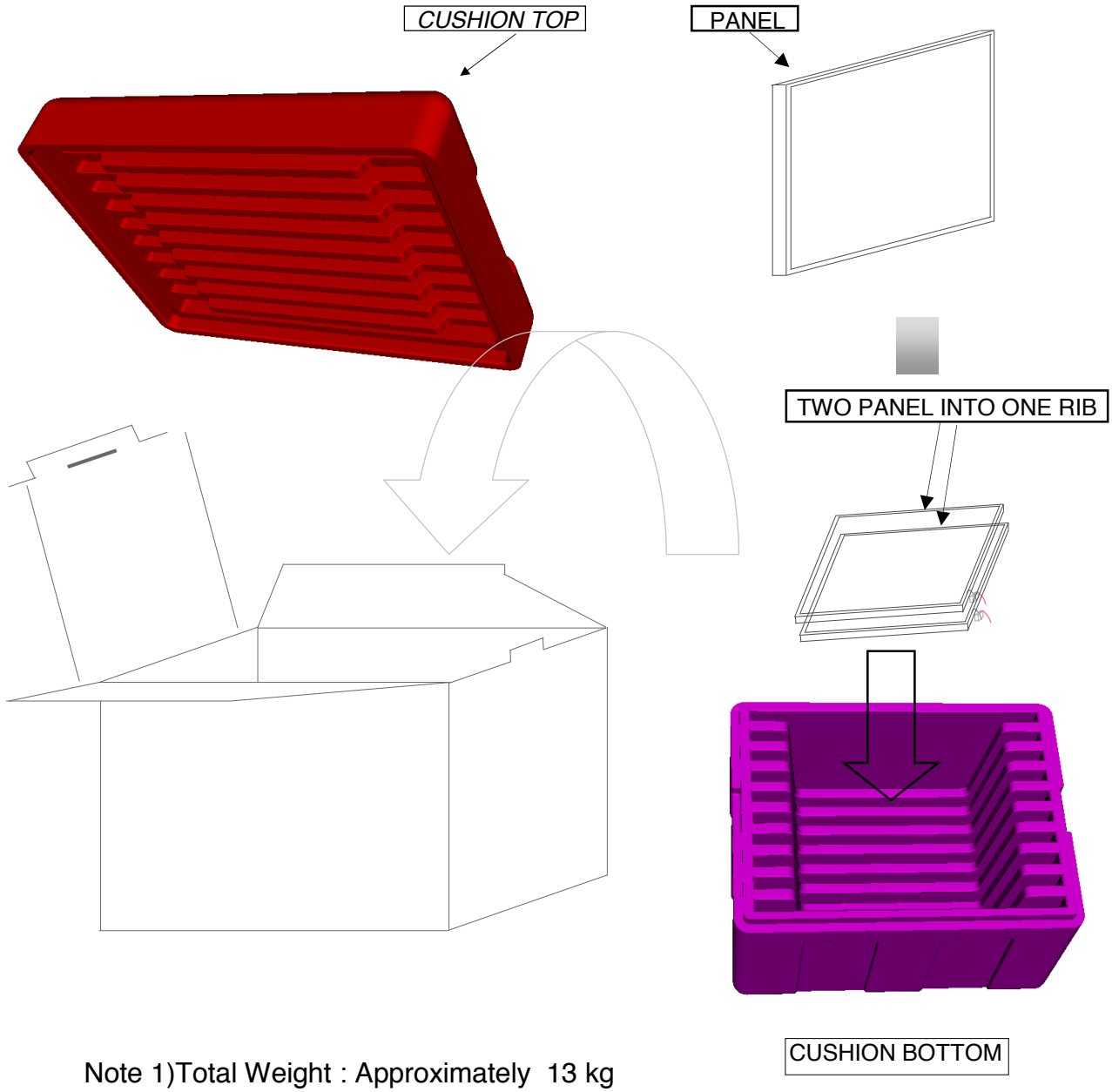

Note 1)Total Weight : Approximately 13 kg
2) Acceptance number of piling : 20 EA
3) Carton size : W359*L463*H333

(3)Packing Material

No	Part name	Quantity
1	Static electric protective sack	20 pcs
2	Packing case (Inner box) included shock absorber	1 set
3	Pictorial marking	2 pcs
4	Carton	1 set

9. MARKINGS & OTHERS

A nameplate bearing followed by is affixed to a shipped product at the specified location on each product.

(1)Parts number : LTN173KT01
(2)Revision code : 3 letters
(3)Lot number : X X X X XX XX XX C01

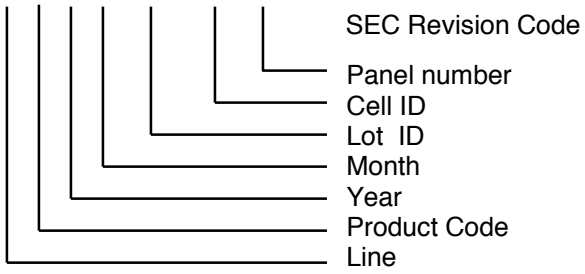

(4) Nameplate Indication

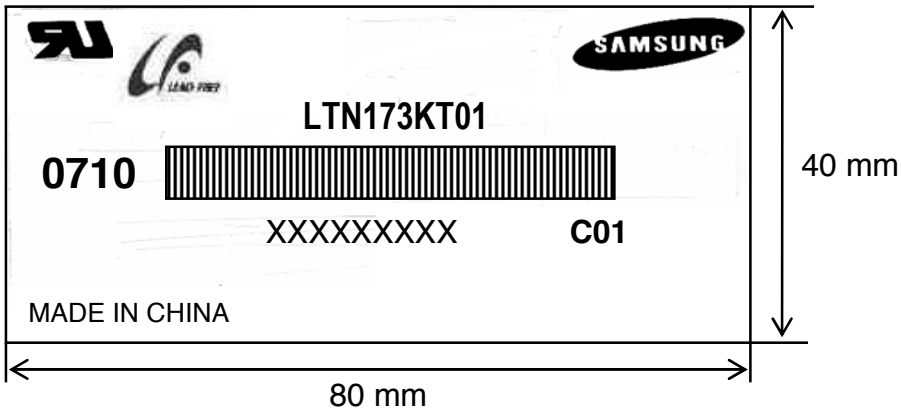

Parts name : LTN173KT01
Lot number : XXXXXXXXXX
Inspected work week : 0910(2009 year 10th week)
Product Revision Code : C01

(7) Packing box Marking : Samsung TFT-LCD Brand Name

10. GENERAL PRECAUTIONS

Approval

1. Handling

(a) When the module is assembled, It should be attached to the system firmly using every mounting holes. Be careful not to twist and bend the modules.

(b) Refrain from strong mechanical shock and / or any force to the module. In addition to damage, this may cause improper operation or damage to the module.

(c) Note that polarizers are very fragile and could be easily damaged. Do not press or scratch the surface harder than a HB pencil lead.

(d) Wipe off water droplets or oil immediately. If you leave the droplets for a long time, Staining and discoloration may occur.

(e) If the surface of the polarizer is dirty, clean it using some absorbent cotton or soft cloth.

(f) The desirable cleaners are water, IPA (Isoprophyl Alcohol) or Hexane.
Do not use Ketone type materials(ex. Acetone), Ethyl alcohol, Toluene, Ethyl acid or Methyl chloride. It might permanent damage to the polarizer due to chemical reaction.

(g) If the liquid crystal material leaks from the panel, it should be kept away from the eyes or mouth . In case of contact with hands, legs or clothes, it must be washed away thoroughly with soap.

(h) Protect the module from static , it may cause damage to the C-MOS Gate Array IC.

(i) Use fingerstalls with soft gloves in order to keep display clean during the incoming inspection and assembly process.

(j) Do not disassemble the module.

(k) Do not pull or fold the lamp wire.

(l) Do not adjust the variable resistor which is located on the back side.

(m) Protection film for polarizer on the module shall be slowly peeled off just before use so that the electrostatic charge can be minimized.

(n) Pins of I/F connector shall not be touched directly with bare hands.

2. STORAGE

(a) Do not leave the module in high temperature, and high humidity for a long time. It is highly recommended to store the module with temperature from 0 to 35 °C and relative humidity of less than 70%.

(b) Do not store the TFT-LCD module in direct sunlight.

(c) The module shall be stored in a dark place. It is prohibited to apply sunlight or fluorescent light during the store.

3. OPERATION

(a) Do not connect,disconnect the module in the " Power On" condition.

(b) Power supply should always be turned on/off by following item 6.3 " Power on/off sequence ".

(c) Module has high frequency circuits. Sufficient suppression to the electromagnetic interference shall be done by system manufacturers. Grounding and shielding methods may be important to minimize the interference.

(d) The standard limited warranty is only applicable when the module is used for general notebook applications. If used for purposes other than as specified, SEC is not to be held reliable for the defective operations. It is strongly recommended to contact SEC to find out fitness for a particular purpose.

4. OTHERS

(a) Ultra-violet ray filter is necessary for outdoor operation.

(b) Avoid condensation of water. It may result in improper operation or disconnection of electrode.

(c) Do not exceed the absolute maximum rating value. (the supply voltage variation, input voltage variation, variation in part contents and environmental temperature, so on) Otherwise the module may be damaged.

(d) If the module displays the same pattern continuously for a long period of time,it can be the situation when the image "sticks" to the screen.

(e) This module has its circuitry PCB's on the rear side and should be handled carefully in order not to be stressed.

11. EDID

Approval

Address (HEX)	FUNCTION	Value HEX	BIN	DEC	ASCII or Data	Notes
00	Header	00	00000000	0		EDID Header
01		FF	11111111	255		
02		FF	11111111	255		
03		FF	11111111	255		
04		FF	11111111	255		
05		FF	11111111	255		
06		FF	11111111	255		
07		00	00000000	0		
08	ID Manufacturer Name	4C	01001100	76	S E	3 character ID
09		A3	10100011	163	C	"SEC"
0A	ID Product Code	4B	01001011	75	[K]	
0B		54	01010100	84	[T]	
0C	32-bit serial no.	00	00000000	0		
0D		00	00000000	0		
0E		00	00000000	0		
0F		00	00000000	0		
10	Week of manufacture	00	00000000	0		
11	Year of manufacture	12	00010010	18	2008	2008
12	EDID Structure Ver.	01	00000001	1	1	EDID Ver. 1.0
13	EDID revision #	03	00000011	3	0	EDID Rev. 0
14	Video input definition	80	10000000	128		
15	Max H image size	26	00100110	38	38	38 cm(approx)
16	Max V image size	15	00010101	21	21	21 cm(approx)
17	Display Gamma	78	01111000	120	2.2	Gamma 2.2
18	Feature support	0A	00001010	10		
19	Red/green low bits	85	10000101	133		10000111
1A	Blue/white low bits	95	10010101	149		11111110
1B	Red x/ high bits	99	10011001	153	0.600	Red x 0.600= 1001010010
1C	Red y	57	01010111	87	0.340	Red y 0.340= 0101011100
1D	Green x	4F	01001111	79	0.310	Green x 0.310= 0100111101
1E	Green y	8F	10001111	143	0.560	Green y 0.560= 1000110011
1F	Blue x	26	00100110	38	0.150	Blue x 0.150= 001001111
20	Blue y	21	00100001	33	0.130	Blue y 0.130= 001001111
21	White x	50	01010000	80	0.313	White x 0.313= 0101000001
22	White y	54	01010100	84	0.329	White y 0.329= 0101010001
23	Established timing 1	00	00000000	0		
24	Established timing 2	00	00000000	0		
25	Established timing 3	00	00000000	0		
26	Standard timing #1	01	00000001	1		not used
27		01	00000001	1		
28	Standard timing #2	01	00000001	1		not used
29		01	00000001	1		
2A	Standard timing #3	01	00000001	1		not used
2B		01	00000001	1		

2C	Standard timing #4	01	00000001	1		not used
2D		01	00000001	1		
2E	Standard timing #5	01	00000001	1		not used
2F		01	00000001	1		
30	Standard timing #6	01	00000001	1		not used
31		01	00000001	1		
32	Standard timing #7	01	00000001	1		not used
33		01	00000001	1		
34	Standard timing #8	01	00000001	1		not used
35		01	00000001	1		
36	Detailed timing/monitor descriptor #1	20	00100000	32	107.84	Main clock= 53.92*2 MHz
37		2A	00101010	42		
38		40	01000000	64	1600	Hor active=1600 pixels
39		24	00100100	36	292	Hor blanking=292 pixels
3A		61	01100001	97		4bit : 4bit
3B		84	10000100	132	900	Vertcal active=900 lines
3C		32	00110010	50	50	Vertical blanking=50 lines
3D		30	00110000	48		4bit : 4bit
3E		30	00110000	48	48	
3F		20	00100000	32	32	H sync. Width=32 pixels
40		26	00100110	38	2 6	V sync. Offset=2 lines V sync. Width=6 lines
41		00	00000000	0		2bit : 2bit :2bit :2bit
42		7E	01111110	126	382	H image size= 382 mm(approx)
43		D6	11010110	214	214	V image size = 214 mm(approx)
44		10	00010000	16		
45		00	00000000	0		No Horizontal Border
46		00	00000000	0		No Vertical Border
47		19	00011001	25		
48	Detailed timing/monitor descriptor #2	00	00000000	0		Manufacturer Specified (Timing)
49		00	00000000	0		
4A		00	00000000	0		
4B		0F	00001111	15		
4C		00	00000000	0		
4D		00	00000000	0		**Value**=HSPW min / 2
4E		00	00000000	0		**Value**=HSPW max / 2
4F		00	00000000	0		**Value**=Thbpmin /2
50		00	00000000	0		**Value**=Thbpmax /2
51		00	00000000	0		**Value**=VSPW min /2
52		00	00000000	0		**Value**=VSPW max /2
53		00	00000000	0		**Value**=Tvbpmin / 2
54		00	00000000	0		**Value**=Tvbpmax / 2
55		1E	00011110	30		Thpmin=**value***2 + HA pixelclks
56		B4	10110100	180		Thpmax=**value***2 + HA pixelclks
57		02	00000010	2		Tvpmin=**value***2 + VA lines
58		74	01110100	116		Tvpmax=**value***2 + VA lines
59		00	00000000	0		Module revision

5A		00	00000000	0		ASCII Data String Tag
5B		00	00000000	0		
5C		00	00000000	0		
5D		FE	11111110	254		
5E		00	00000000	0		
5F		53	01010011	83	[S]	
60		41	01000001	65	[A]	
61	Detailed timing/monitor	4D	01001101	77	[M]	
62	descriptor #3	53	01010011	83	[S]	
63		55	01010101	85	[U]	
64		4E	01001110	78	[N]	
65		47	01000111	71	[G]	
66		0A	00001010	10	[^]	
67		20	00100000	32	[ ]	
68		20	00100000	32	[ ]	
69		20	00100000	32	[ ]	
6A		20	00100000	32	[ ]	
6B		20	00100000	32	[ ]	
6C		00	00000000	0		Monitor Name Tag (ASCII)
6D		00	00000000	0		
6E		00	00000000	0		
6F		FE	11111110	254		
70		00	00000000	0		
71		4C	01001100	76	[L]	
72		54	01010100	84	[T]	
73	Detailed timing/monitor	4E	01001110	78	[N]	
74	descriptor #4	31	00110001	49	[1]	
75		37	00110111	55	[7]	
76		33	00110011	51	[3]	
77		4B	01001011	75	[K]	
78		54	01010100	84	[T]	
79		30	00110000	48	[0]	
7A		31	00110001	49	[1]	
7B		30	00110000	48	[0]	
7C		30	00110000	48	[0]	
7D		30	00110000	48	[0]	
7E	Extension Flag	00	00000000	0		
7F	Checksum	**26**	00100110	**38**		