SAMSUNG ELECTRONICS

Approval

TO :

DATE : JULY 11th, 2006

SAMSUNG TFT-LCD

MODEL NO. : LTP500GV-F01

NOTE

Any Modification of Spec is not allowed without SEC's permission.

Prepared by : LCD BUSINESS, Mobile Display Development Team

Samsung Electronics Co . , LTD.

wise view™

Approval

Contents

Revision History
General Description
1. Absolute Maximum Ratings
  1.1 Absolute Ratings Of Environment
  1.2 Electrical Absolute Ratings
2. Optical Characteristics
3. Electrical Characteristics
  3.1 TFT-LCD Module
  3.2 Back-Light Unit
4. Touch Screen Panel Specifications
  4.1 Electrical Characteristics
5. Block Diagram
  5.1 TFT-LCD Block Diagram
  5.2 Touch Screen Panel
6. Input Terminal Pin Assignment
  6.1 TFT-LCD Module
  6.2 Input Signal, Basic Display Colors and Gray Scale of Each Colors
7. Interface Timing
  7.1 Recommended Signal Timing
8. Outline Dimensions
  8.1 Module Outline Dimensions (Total Ass'y)
9. Packing
10. Marking & Others
11. Reliability Test
  11.1 Condition
  11.2 Judgement
12. General Precaution
  12.1 Handling
  12.2 Storage
  12.3 Operation
  12.4 Others

Revision History

Approval

Data	Rev. No.	Page	Summary
July.12.2005	Rev00		Rev.000 was issued.
July.27.2005	Rev01	p.4	. Viewing direction is changed to 9 o'clock.
		p.7	. Response time is changed to 35mS(typ.)/40mS(max.).
			. Color Chromaticity is changed.
			. Viewing angle is changed to 30/40/50/50(L/R/U/D).
Aug.20.2005	Rev02	p.4	. Viewing direction is changed to 3 o'clock.
		p.7	. Viewing angle is changed to Min.40/30/50/50(L/R/U/D).
			. White uniformity is changed to Min. 76%.
		p.11	. Temp. condition of the voltage range is modified.
			: Ta = -20℃ to 60℃
		p.12	. The power sequence is modified.
			. Back-light unit, note(1) is modified.
			: White 3 LEDs x 4 parallel type
			. LED color rank is added.
			: b5 or b6
		p.13	. Activation force for TSP is added.
			: Max. 80g
		p.15	. Pin No. for TSP is modified to (1)X2,(2)Y1,(3)X1,(4)Y2.
		p.16	. No.5 & 6 of input pin assignment is modified.
			: X2 - up, Y2 - right
		p.22	. Outline drawing is modified.
			: deleted of unnecessary dimension(4pt)
			: added dimension(1pt)
			: changed of the T/C shape(1pt)
June.26.2006	Rev03	P.7	. Color Chromaticity is changed.
			: maximum of Rx
		p.22	. Outline drawing is modified.
			: changed of dimension(1pt)
			: changed of the T/C shape(1pt)
			: added dimension(1pt)
			: changed of the tape(1pt)
			: added ground pad and dimension(5pt)
			: added align mark(2pt)
			: added label,label align mark,FPC outline(5pt)
			: changed of stiffener' thickness(1pt)
			: added dimension and deleted dimension(6pt)
		p.25	. Reliability condition was modified in detail.

General Description

* Description

LTP500GV-F01 is a transmissive type color active matrix TFT (Thin Film Transistor) liquid crystal display (LCD) that uses amorphous silicon TFT as a switching devices. This model is composed of a TFT-LCD module (TFT-LCD panel, driver ICs and FPC), a Back-light unit and a touch screen panel. The resolution of a 5.0" contains 480 x 640 pixels and can display up to 262K colors.

* Features

- Transmissive type
- 12 LED Back-light
- Using the Clear type Touch Screen Panel
- Dot Inversion mode
- Low Power Consumption

* Applications

- Display terminals for PDA application products.
- Portable PC / Game machine

* General Information

Items	Specification	Unit	Note
Display area	75.60H) x 100.80(V)	mm	-
Driver element	a-Si TFT active matrix	-	-
Display colors	262,144	colors	-
Color Gamut	40	%	-
Number of pixels	480(H) x 640(V)	pixel	-
Pixel arrangement	RGB vertical stripe	-	-
Pixel pitch	0.0525(H) x RGB x 0.1575(V)	mm	-
Display mode	Normally White	-	-
Viewing Direction	3	o'clock	-

* Mechanical Information

Item		Min.	Typ.	Max.	Unit	Note
Module size	Horizontal(H)	83.64	83.84	84.04	mm	(1)
	Vertical(V)	113.0	113.2	113.4	mm	(1),(2)
	Depth(D)	4.2	4.5	4.8	mm	(1),(2)
Weight		-	85	90	g	(1),(2)

Note (1) Touch screen panel and Back-light unit are included.
Note (2) FPC protrusion is not included.

1. Absolute Maximum Ratings

1.1 Absolute Ratings of Environment

Item	Symbol	Min.	Max.	Unit	Note
Storage temperature	TSTG	-30	70	℃	(1),(4)
Operating temperature (Ambient temperature)	TOPR	-20	60	℃	(1),(2),(3),(4)

Note (1) 95 % RH Max. (40 °C ³ Ta)
Maximum wet-bulb temperature at 39 °C or less. (Ta > 40 °C) No condensation.

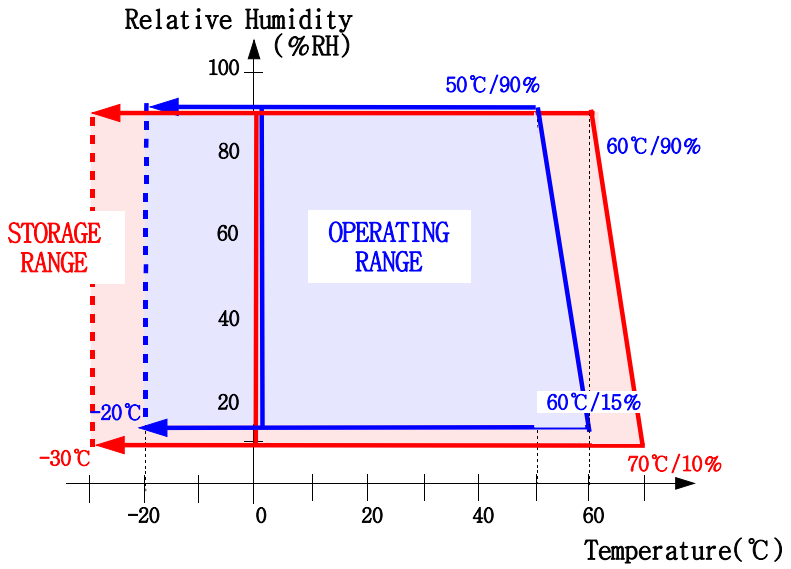

Temperature & Humidity Graph at Absolute Environment

Note (2) When operated at a temperature lower than 0℃,
the LCD worked slowly and the screen appeared low-contrast images due to the characteristics of LC (Liquid Crystal).

Note (3) If any fixed pattern is displayed on LCD for minutes,
image-sticking phenomenon may occur.

Note (4) Touch Screen Panel is separated from Module, because of difference of condition.
About the TSP's Specification, refer to page 13page.

1.2 Electrical Absolute Ratings

(1) TFT-LCD Module

(Ta = 25 ± 2°C, DGND=AGND=0V)

Characteristics	Symbol	Min.	Max.	Unit	Note
Power Supply (Digital)	DVDD	-0.3	4.6	V	(1),(2)
Power Supply (Analog)	AVDD	-0.3	13.0	V	(1),(3)
Power Supply (Gate On)	VGH - AVDD/2	-0.3	24.0	V	(1),(4)
Power Supply (Gate Off)	AVDD - VGL	-0.3	24.0	V	(1),(5)
Power Supply	VGH - VGL	-0.3	37.0	V	(1),(6)
Reference Voltage of Common LCD	VCOMI	-1.0	6.5	V	DC

Note (1) If used beyond absolute maximum ratings, the LSI may permanently be damaged. It is strongly recommended to use the LSI within the condition of electrical characteristics for normal operation. Exposure to a condition not within the electrical characteristics may affect the reliability of device.

Note (2) Make sure (High) VCC ≥ GND(Low)

Note (3) Make sure (High) AVDD ≥ GND(Low)

Note (4) Make sure (High) VGH ≥ AVDD/2(Low)

Note (5) Make sure (High) AVDD ≥ VGL(Low)

Note (6) Make sure (High) VGH ≥ VGL(Low)

(2) Back-Light Unit

(Ta = 25 ± 2°C)

Characteristics	Symbol	Min.	Max.	Unit	Note
Current	I_L	-	25	mA	(7)

Note (7) Permanent damage to the device may occur if maximum values are exceeded or reverse voltage is loaded.
Functional operation should be restricted to the conditions described under normal operating conditions.

2. Optical Characteristics

The following items are measured under stable conditions. The optical characteristics should be measured in a dark room or equivalent state with the methods shown in Note (1), (2), (3).

* Measuring equipment: SR-3, BM-7, EZ-Contrast

(Ta = 25 ± 2°C)

Item		Symbol	Condition	Min.	Typ.	Max.	Unit	Note
Contrast ratio (Center point)		C/R	Φ=0 θ=0 Normal Viewing Angle B/L On	175	250	-	-	(4) SR-3
Luminance of white (Center point)		YL		140	200	-	cd/m2	(5) SR-3
NTSC Color Saturation				36	40	-	%	
Response time	Rising:Tr	Tr+Tf		-	35	40	msec	(6) BM-7
	Falling:Tf							
Color Chromaticity (CIE 1931)	White	Wx		0.264	0.314	0.364	-	(7) SR-3
		Wy		0.288	0.338	0.388		
	Red	Rx		0.519	0.569	0.619		
		Ry		0.301	0.351	0.401		
	Green	Gx		0.281	0.331	0.381		
		Gy		0.464	0.514	0.564		
	Blue	Bx		0.097	0.147	0.197		
		By		0.104	0.154	0.204		
Viewing angle	Hor.	qL	C/R≥10 B/L On	40	-	-	Degrees	(8) Ez-Contrast
		qR		30	-	-		
	Ver.	fH		50	-	-		
		fL		50	-	-		
White uniformity		B_{uni}	9points*	76	-	-	%	(9) SR-3
Flicker		-	Vertical stripe lines	No Visible Flicker after adjusting Variable Resistor(VCOMI)				(10)

Note (1) The optical characteristics is measured with Back-light and Touch screen panel.

Note (2) If product is exposed to high temperatures for extended time, there is a possibility of the polarizer film damage which could degrade the optical characteristics.

Note (3) Test Equipment Setup for the Transmissive Mode (Back-light On)
After stabilizing and leaving the panel alone at a given temperature for 30 min, the measurement should be executed. Measurement should be executed in a stable, windless, and dark room. 30 min after lighting the back-light. This should be measured in the center of screen.

- Back-light Current : I_L=15mA
- Back-Light On condition

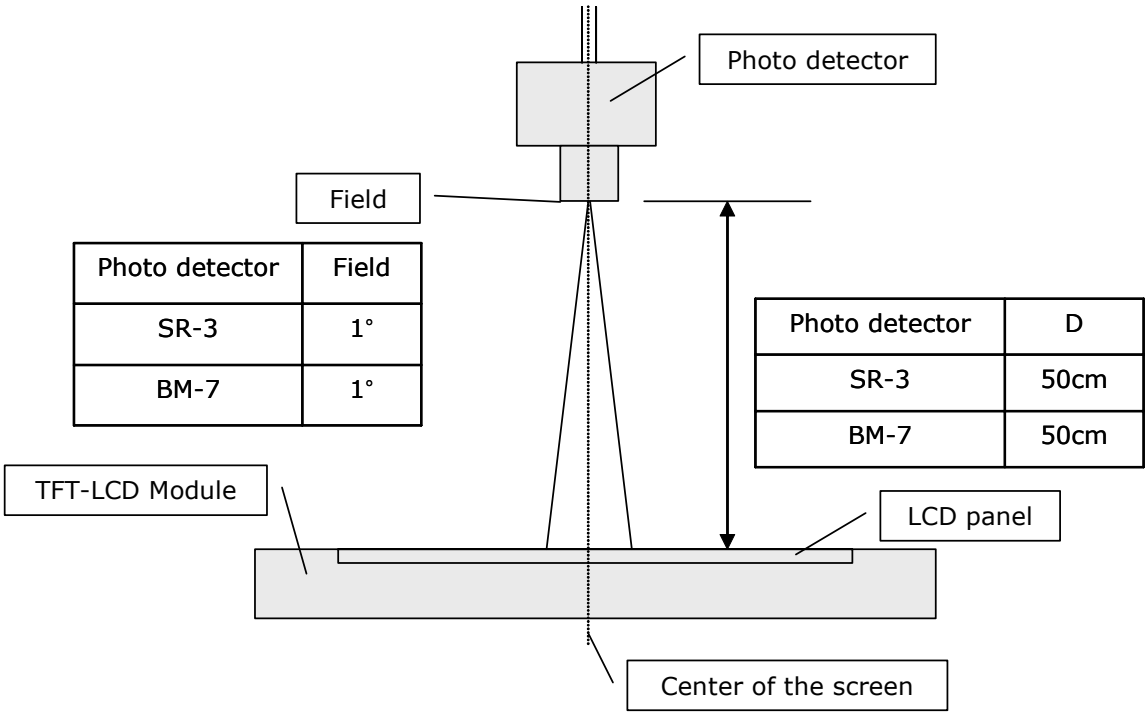

Photo detector	Field
SR-3	1°
BM-7	1°

Photo detector	D
SR-3	50cm
BM-7	50cm

Note (4) Definition of Contrast Ratio (C/R) : Ratio of gray max (Gmax) & gray min (Gmin) at the center point of the panel. If Back-light is on state, it is the light source and the SR-3 will be used to measure.

$$C/R = \frac{Gmax}{Gmin}$$

* Gmax : Luminance with all pixels white
* Gmin : Luminance with all pixels black

Note (5) Definition of Luminance of White : Luminance of white at center point with TSP. In this case, the incident light is not from the light source but from the Back-light that generates the reflected light source on LCD in the dark room.

Note (6) Definition of Response time : Sum of Tr ,Tf

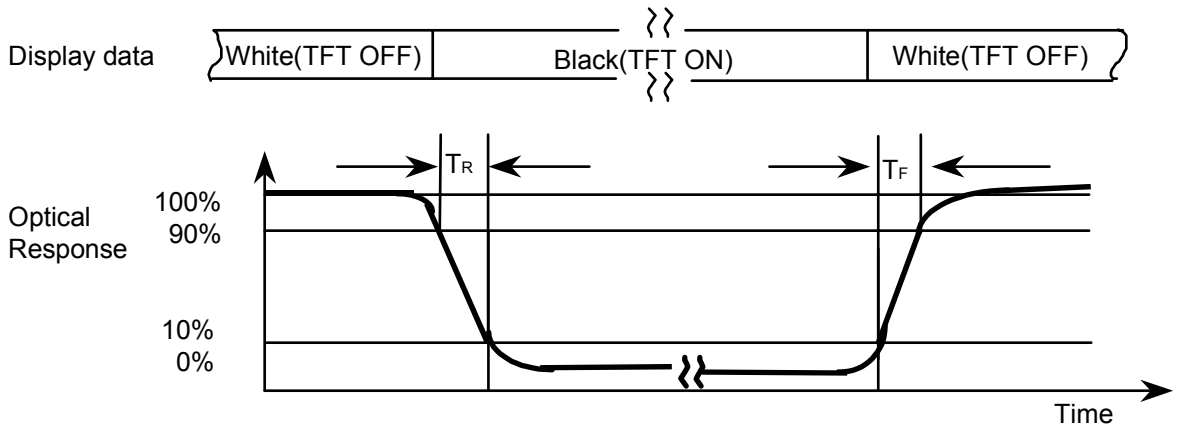

Note (7) Definition of Color Chromaticity (CIE 1931), (Back-light: On)

It should be measured with standard light source or single rank of LED.

Note (8) Definition of Viewing Angle : Viewing angle range

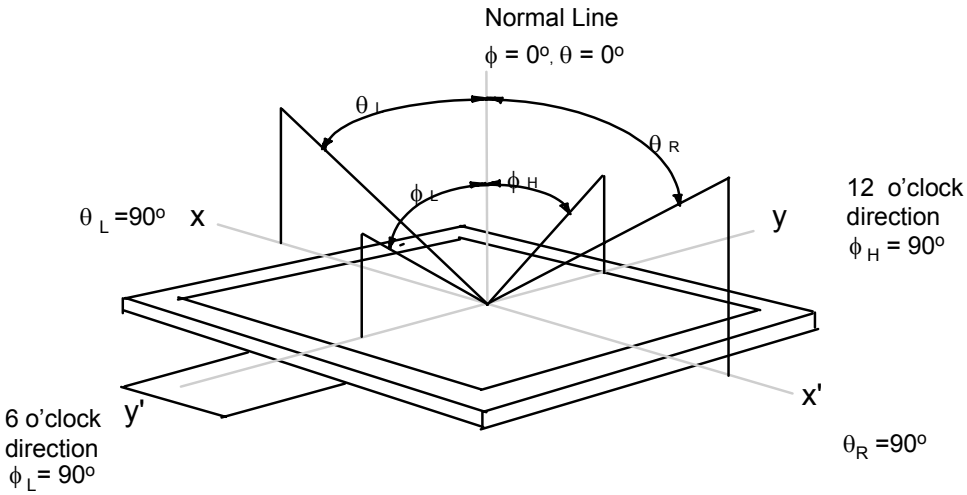

Note (9) Definition of Uniformity

$$\text{White Uniformity} = \frac{\text{Min luminance of white among 9-points}}{\text{Max luminance of white among 9-points}} \times 100\%$$

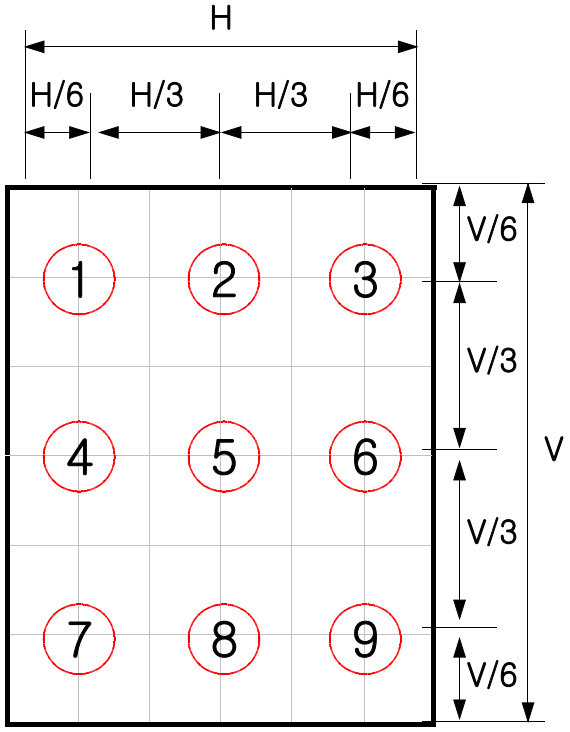

The spot locations for luminance measurement

Note (10) Recommend Circuit of VCOMI

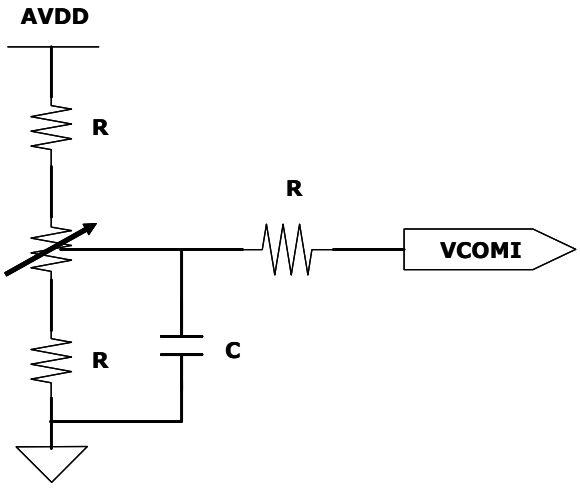

3. Electrical Characteristics

3.1 TFT-LCD Module

(Ta = -20°C ~ 60°C)

Characteristics		Symbol	MIN.	TYP.	MAX.	Unit	Note
Power Supply (Digital)		DVDD	2.5	3.3	3.6	V	-
Reference of Common LCD		VCOMI	2.85	3.03	3.15	V	(1)
Power Supply (Analog)		AVDD	7.6	8.0	8.4	V	(2)
Ripple of DVDD, VCOMI & AVDD		V_{R1-P_P}	-	-	200	mV	-
Power supply (Gate On)		VGH	15.2	16.0	16.8	V	(2)
Power supply (Gate Off)		VGL	-8.4	-8.0	-7.6	V	(2)
Ripple of VGH & VGL		V_{R-P_P}	-	-	500	mV	-
Digital supply current		I_{DVDD}	-	4.0	5.0	mA	-
Analog supply current		I_{AVDD}	-	6.0	7.0	mA	-
Gate supply current		I_{VGH}	-	1.0	1.5	mA	-
Gate supply current		I_{VGL}	-	1.0	1.5	mA	-
Input voltage	Source driver (High)	VIHS	0.7DVDD	-	DVDD	V	-
	Source driver (Low)	VILS	GND	-	0.3DVDD	V	-
Power Dissipation (Only Panel)		P_{LCD}	-	90	110	mW	-

Note (1) To reduce flicker and guarantee optical characteristic, VCOMI has to be adjusted by customer using variable resistor. If there is flicker, latent image can be occurred.

Note (2) To guarantee optical characteristic, input voltages of AVDD, VGH and VGL have to be near to typical voltage.

* To prevent a latch-up or DC operation of the LCD module, the power on/off sequence should be as below.

- Power On : DVDD → VGL → (VGH, AVDD) → Data
- Power Off : Data → (AVDD,VGH) → VGL → DVDD

* Power dissipation check pattern.

▶ 480 x 640 0Gray Black Pattern

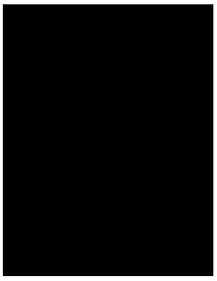

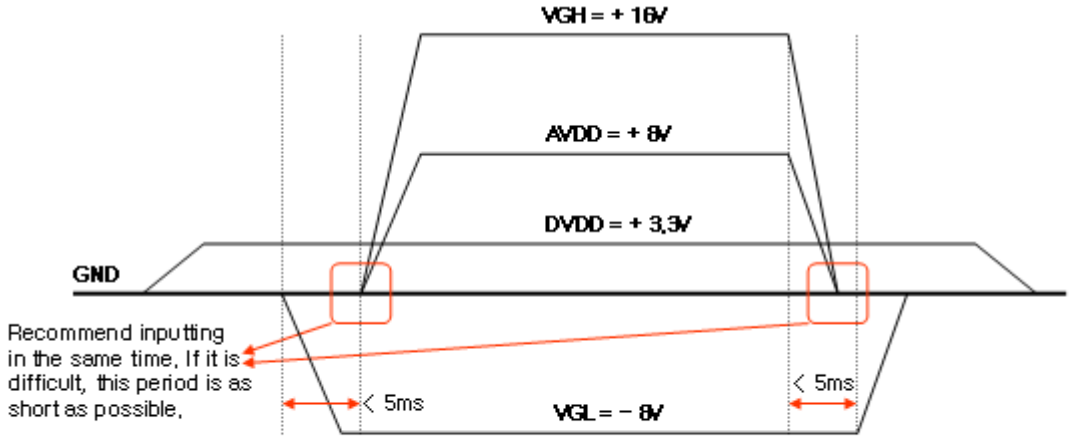

< Power sequence >

3.2 Back-Light Unit

The Back-light system is an edge-lighting type with 12 white LED(Light Emitting Diode)s. The characteristics of 12 white LEDs are shown in the following tables.

(Ta=25 ± 2°C)

Characteristics	Symbol	Min.	Typ.	Max.	Unit	Note
LED Voltage	V_L	-	9	12	V	(1),(2)
LED Current	I_L	-	15	20	mA	(1),(2)
Power Consumption	P_L	-	540	-	mW	(3)

Note (1) White 3 LEDs × 4 parallel type.
Note (2) V_L(Typ) at I_L = 15mA, V_L(Max) at I_L = 20mA.
Note (3) Calculated reference value : P_L = 4 × V_L(Typ) × I_L(Typ).
Note (4) LED color rank : b5, b6.
For one module, b5 and b6 rank LED are not used together.

4. Touch Screen Panel Specifications

4-1. Electrical Characteristics

Item	Min.	Typ.	Max.	Unit	Note
Input Voltage	-	5.0	7.0		-
Terminal resistance	200	400	700	Ω	Y(Film side)
	450	550	1250	Ω	X(Glass side)
Line linearity	-1.5	-	1.5	%	(1), X direction
	-1.5	-	1.5	%	(1), Y direction
Insulation resistance	20	-	-	MΩ	DC 25V
Activation Force	-	-	80	g	-

Note (1) Definition of Line linearity Test(test by Touch Screen Panel Supplier)

a. Weight Load : 250gF

b. R0.8 Polyacetal Stylus

c. Drawing Cycle : 100,000 cycles

d. Drawing Direction : Forward-and-Back along straight line or Random on Entire Input Area

5. Block Diagram

5.1 TFT-LCD Block Diagram

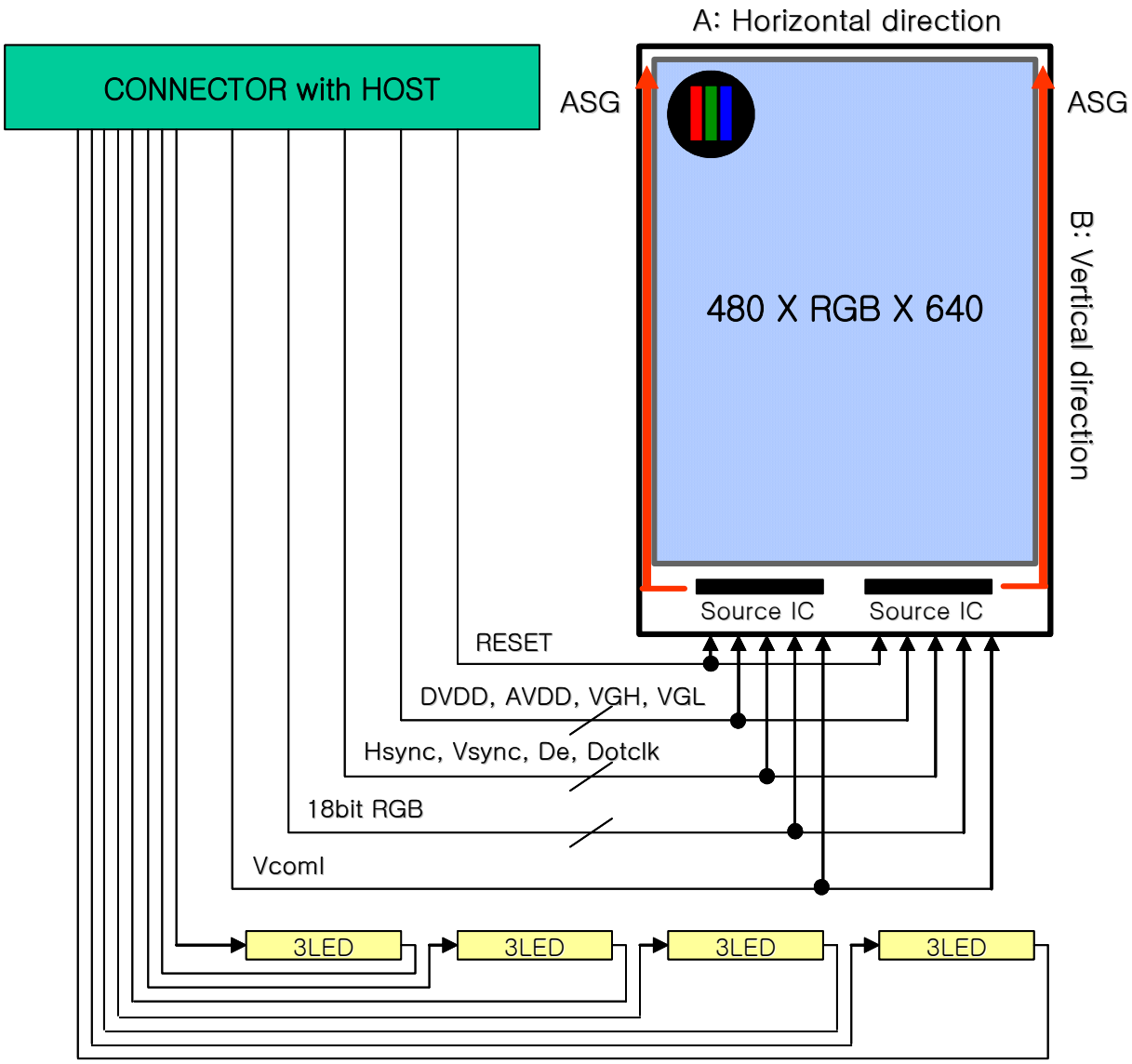

The scanning direction for the horizontal period and the vertical period are **A** and **B** respectively as shown upper diagram. The scanning directions are from a front view.

5.2 Touch Screen Panel (Film Glass type : Front view)

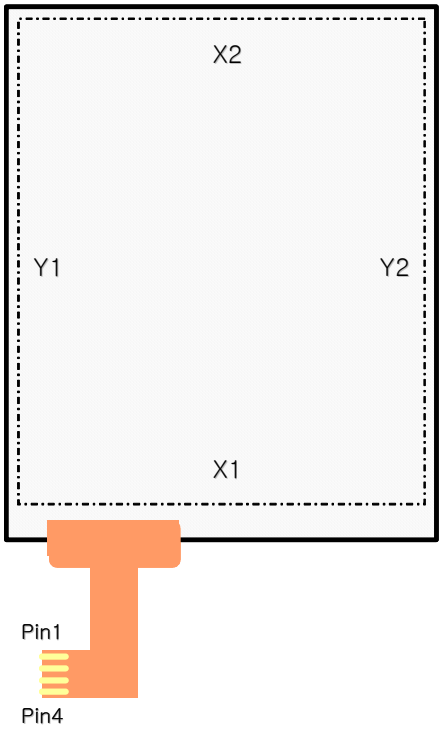

Pin No.	Pin Assignment
1	X2
2	Y1
3	X1
4	Y2

5.3 Back-light Unit

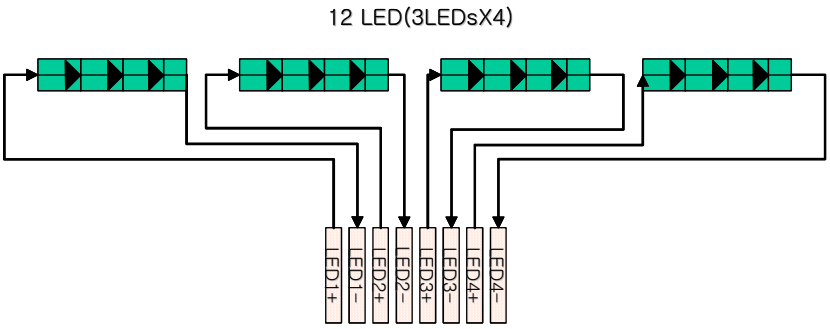

Pin	I/O
LED1+ LED2+ LED3+ LED4+	Anode
LED1- LED2- LED3- LED4-	Cathode

6. Input Terminal Pin Assignment

6.1 TFT-LCD Module (Connector : B to B 60Pin ↔ Matsushita AXK860135Y or Equivalent)

Pin No	Symbol	Description	Remark
1	GND	ground	
2	GND	ground	
3	X1	bottom	TSP pin
4	Y1	left	TSP pin
5	X2	up	TSP pin
6	Y2	right	TSP pin
7	NC	no connection	
8	NC	no connection	
9	LED1+	anode 1	
10	LED1-	cathode 1	
11	LED2+	anode 2	
12	LED2-	cathode 2	
13	LED3+	anode 3	
14	LED3-	cathode 3	
15	LED4+	anode 4	
16	LED4-	cathode 4	
17	NC	no connection	
18	NC	no connection	
19	VGH	power supply of gate driver	Von
20	AVDD	power supply of analog	
21	NC	no connection	
22	AVDD	power supply of analog	
23	GND	ground	
24	NC	no connection	
25	DOTCLOCK	pixel clock	
26	VCC	power supply of digital	
27	GND	ground	
28	VCC	power supply of digital	
29	VCOMI	reference voltage of common LCD	
30	NC	no connection	
31	GND	ground	
32	HSYNC	horizontal sync	
33	R5	red data signal (MSB)	
34	VSYNC	vertical sync	

Pin No	Symbol	Description	Remark
35	R4	red data signal	
36	GND	ground	
37	R3	red data signal	
38	RESETB	reset signal	
39	R2	red data signal	
40	ENABLE	de signal	
41	R1	red data signal	
42	NC	no connection	
43	R0	red data signal (LSB)	
44	VGL	power supply of gate driver	Voff
45	GND	ground	
46	NC	no connection	
47	G5	green data signal (MSB)	
48	B5	blue data signal (MSB)	
49	G4	green data signal	
50	B4	blue data signal	
51	G3	green data signal	
52	B3	blue data signal	
53	G2	green data signal	
54	B2	blue data signal	
55	G1	green data signal	
56	B1	blue data signal	
57	G0	green data signal (LSB)	
58	B0	blue data signal (LSB)	
59	GND	no connection	
60	GND	no connection	

6.2 Input Signal, Basic Display Colors and Gray Scale of Each Colors

< It depends upon LC operation mode. >

COLOR	DISPLAY	DATA SIGNAL																		GRAY SCALE LEVEL
		RED						GREEN						BLUE						
		R0	R1	R2	R3	R4	R5	G0	G1	G2	G3	G4	G5	B0	B1	B2	B3	B4	B5	
BASIC COLOR	BLACK	0	0	0	0	0	0	0	0	0	0	0	0	0	0	0	0	0	0	-
	BLUE	0	0	0	0	0	0	0	0	0	0	0	0	1	1	1	1	1	1	-
	GREEN	0	0	0	0	0	0	1	1	1	1	1	1	0	0	0	0	0	0	-
	CYAN	0	0	0	0	0	0	1	1	1	1	1	1	1	1	1	1	1	1	-
	RED	1	1	1	1	1	1	0	0	0	0	0	0	0	0	0	0	0	0	-
	MAGENTA	1	1	1	1	1	1	0	0	0	0	0	0	1	1	1	1	1	1	-
	YELLOW	1	1	1	1	1	1	1	1	1	1	1	1	0	0	0	0	0	0	-
	WHITE	1	1	1	1	1	1	1	1	1	1	1	1	1	1	1	1	1	1	-
GRAY SCALE OF RED	BLACK	0	0	0	0	0	0	0	0	0	0	0	0	0	0	0	0	0	0	R0
	DARK ↑	1	0	0	0	0	0	0	0	0	0	0	0	0	0	0	0	0	0	R1
		0	1	0	0	0	0	0	0	0	0	0	0	0	0	0	0	0	0	R2
		:	:	:	:	:	:	:	:	:	:	:	:	:	:	:	:	:	:	R3~R60
		:	:	:	:	:	:	:	:	:	:	:	:	:	:	:	:	:	:	
	↓	1	0	1	1	1	1	0	0	0	0	0	0	0	0	0	0	0	0	R61
	LIGHT	0	1	1	1	1	1	0	0	0	0	0	0	0	0	0	0	0	0	R62
	RED	1	1	1	1	1	1	0	0	0	0	0	0	0	0	0	0	0	0	R63
GRAY SCALE OF GREEN	BLACK	0	0	0	0	0	0	0	0	0	0	0	0	0	0	0	0	0	0	G0
	DARK ↑	0	0	0	0	0	0	1	0	0	0	0	0	0	0	0	0	0	0	G1
		0	0	0	0	0	0	0	1	0	0	0	0	0	0	0	0	0	0	G2
		:	:	:	:	:	:	:	:	:	:	:	:	:	:	:	:	:	:	G3~G60
		:	:	:	:	:	:	:	:	:	:	:	:	:	:	:	:	:	:	
	↓	0	0	0	0	0	0	1	0	1	1	1	1	0	0	0	0	0	0	G61
	LIGHT	0	0	0	0	0	0	0	1	1	1	1	1	0	0	0	0	0	0	G62
	GREEN	0	0	0	0	0	0	1	1	1	1	1	1	0	0	0	0	0	0	G63
GRAY SCALE OF BLUE	BLACK	0	0	0	0	0	0	0	0	0	0	0	0	0	0	0	0	0	0	B0
	DARK ↑	0	0	0	0	0	0	0	0	0	0	0	0	1	0	0	0	0	0	B1
		0	0	0	0	0	0	0	0	0	0	0	0	0	1	0	0	0	0	B2
		:	:	:	:	:	:	:	:	:	:	:	:	:	:	:	:	:	:	B3~B60
		:	:	:	:	:	:	:	:	:	:	:	:	:	:	:	:	:	:	
	↓	0	0	0	0	0	0	0	0	0	0	0	0	1	0	1	1	1	1	B61
	LIGHT	0	0	0	0	0	0	0	0	0	0	0	0	0	1	1	1	1	1	B62
	BLUE	0	0	0	0	0	0	0	0	0	0	0	0	1	1	1	1	1	1	B63

REV	Data	Positive Polarity	Negative Polarity	POC=Low	Mode
Low	000000	V0(High)	V63	V63	Normally White
	111111	V63(Low)	V0		
High	000000	V63(Low)	V0	V63	Normally Black
	111111	V0(High)	V63		

Note) Definition of Gray :

Rn : Red Gray, Gn : Green Gray, Bn : Blue Gray (n = Gray level)

Input Signal : 0 = Low level voltage, 1 = High level voltage

※R5,G5,B5 : MSB R0,G0,B0 : LSB

7. Interface Timing

7.1 Recommended Signal Timing

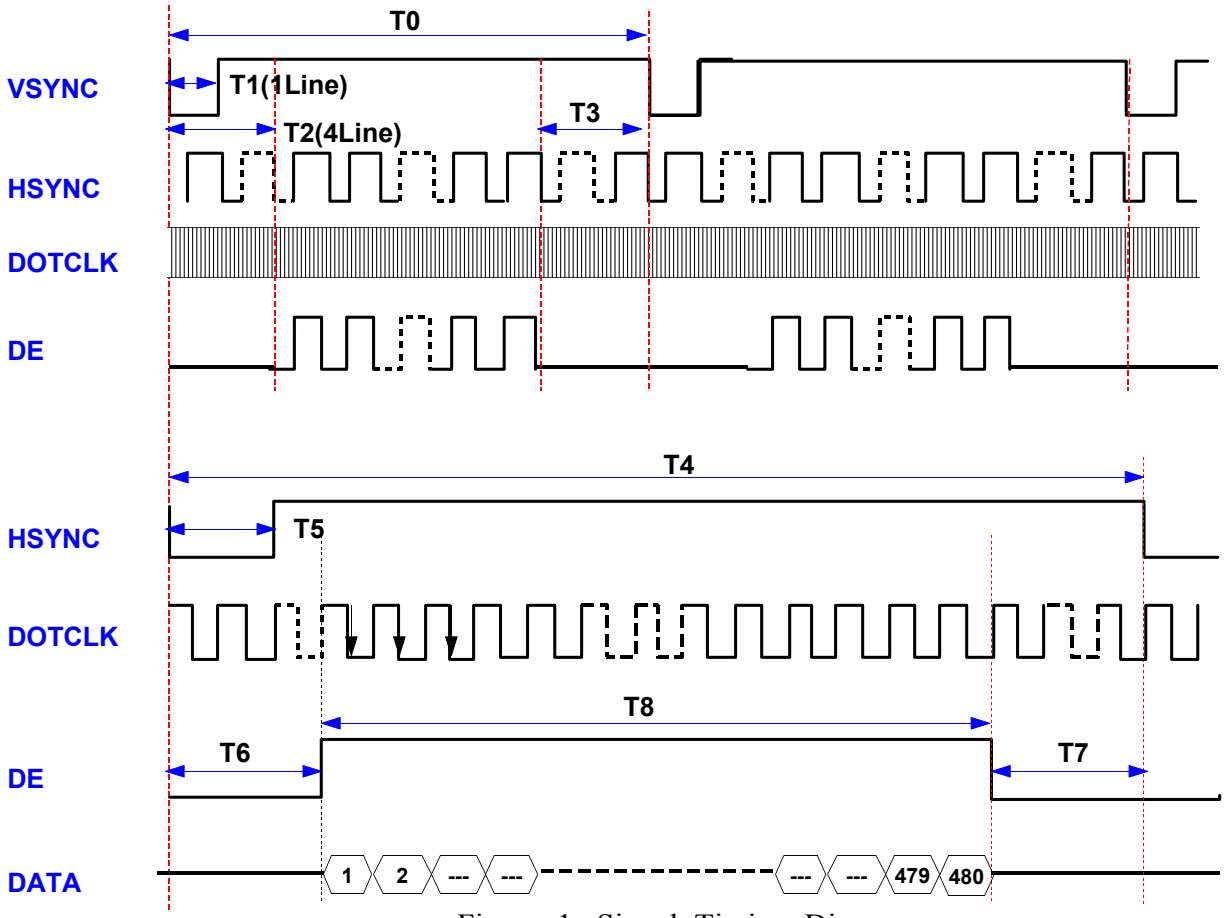

Figure 1. Signal Timing Diagram

Parameter	Symbol	Min	Typ	Max	Unit
Vertical Total	T0	648	-	656	Lines
Vertical Sync Width	T1	-	1(fix)	-	Lines
Vertical Back Porch	T2	-	4(fix)	-	Lines
Vertical Front Porch	T3	4	-	12	Lines
Vertical Display Width	VDW	-	640	-	Lines
Horizontal Total	T4	496	544	736	Clocks
Horizontal Sync Width	T5	-	4	-	Clocks
Horizontal Back Porch	T6	8	-	-	Clocks
Horizontal Front Porch	T7	8	-	-	Clocks
Horizontal Display Width	T8	-	480	-	Clocks

Table 1. Recommended Signal Timing Conditions

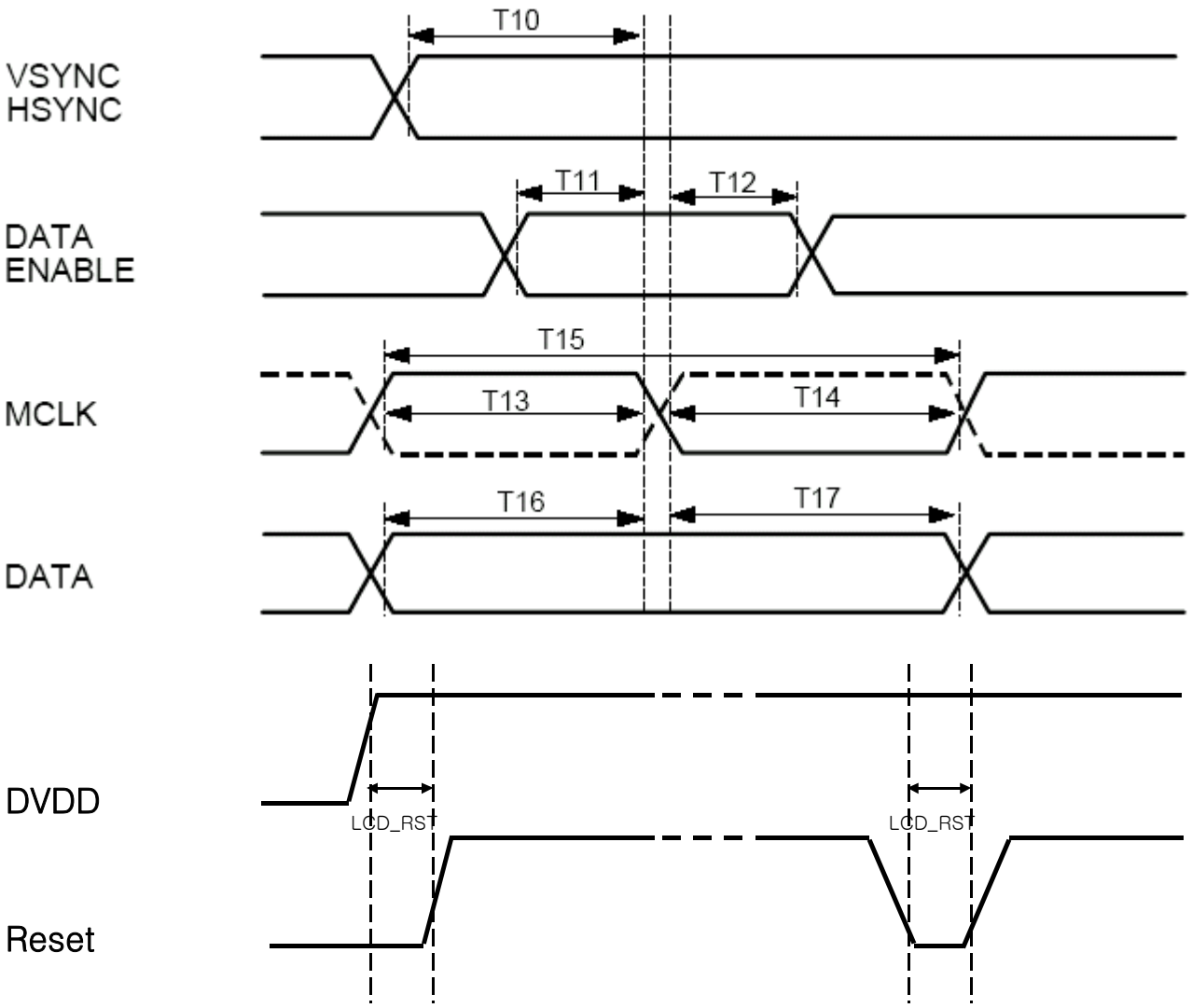

Figure 2. AC Timing Diagram_Signal

Parameter	Symbol	Min	Typ	Max	Unit
VSYNC/HSYNC Setup	T10	5	-	-	ns
DE Setup	T11	5	-	-	ns
DE Hold	T12	5	-	-	ns
MCLK High Level Pulse	T13	15	-	-	ns
MCLK Low Level Pulse	T14	15	-	-	ns
MCLK Cycle Width	T15	35	-	-	ns
DATA Setup	T16	5	-	-	ns
DATA Hold	T17	5	-	-	ns
LCD Reset	LCD_RST	1	-	-	ms

Table 2. Recommended AC Timing Conditions

※ Recommend frame frequency is 60Hz.

8. Outline Dimensions

8.1 Module Outline Dimensions (Total Ass'y)

- Refer to the Next Page.

FILE NO.	

NO	PART NAME	CODE NO	SPECIFICATION	Q'TY	WEIGHT FINISH	WEIGHT MATERIAL	UNFOLDED DIM. OF. MATERIAL	REMARK
	OUTLINE DIMENSION		LTP500GV-F01					

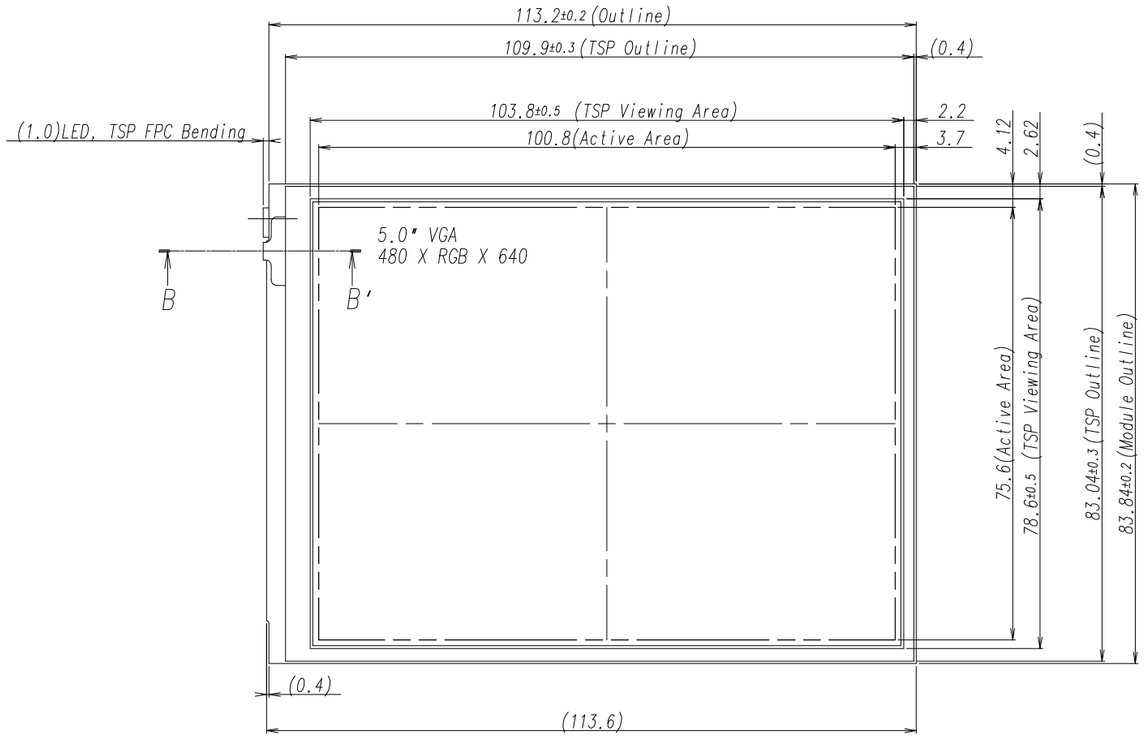

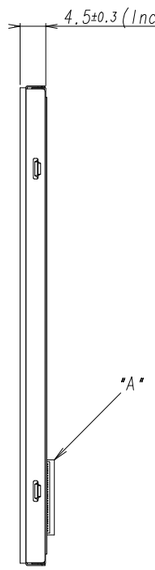

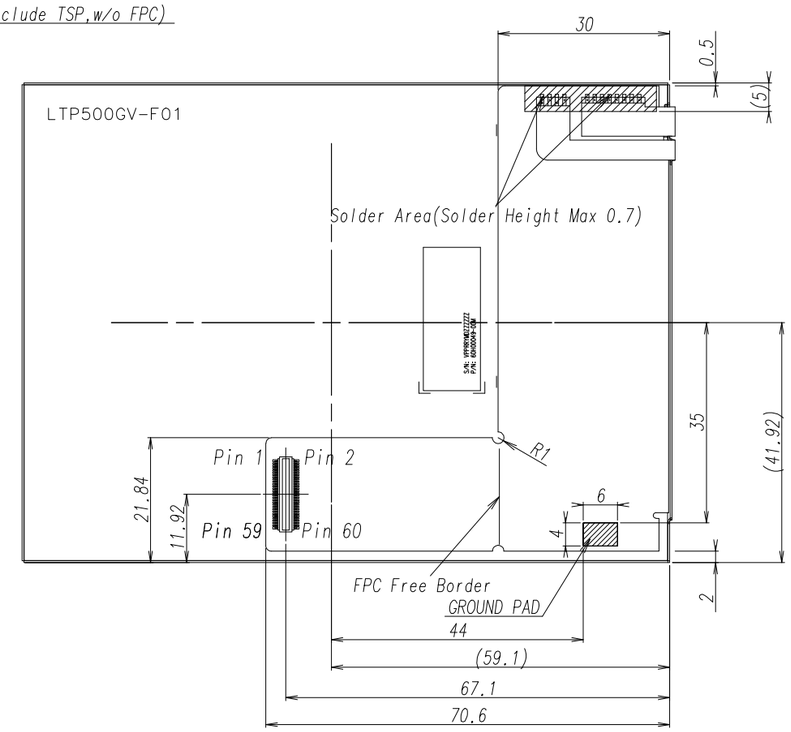

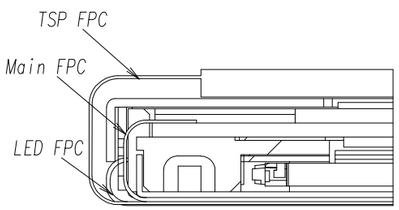

SECTION B-B'(S=5/1)

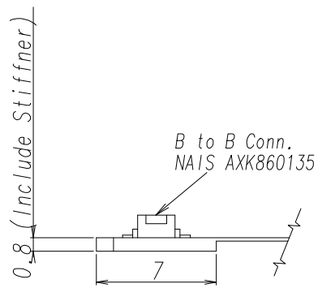

DETAIL "A"(S=3/1)

REVISION

GENERAL TOLERANCE			
STEP	LEVEL 1	LEVEL 2	LEVEL 3
0 < X ≤ 4	±0.05	±0.1	±0.2
4 < X ≤ 16	±0.08	±0.15	±0.3
16 < X ≤ 64	±0.12	±0.25	±0.5
64 < X ≤ 256	±0.25	±0.4	±0.8

REV	DATE	DESCRIPTION OF REVISION				REASON	CHG'D BY
UNIT	mm	DRA'N BY	DES'D BY	CHK'D BY	APP'D BY	MODEL NAME	LTP500GV-F01
SCALE	1/1	I.H.CHOI		S.H.LEE	Y.B.CHU		
TOLERANCE LEVEL 3		2006.07.11		2006.07.11	2006.07.11	PART/SHEET NAME	Outline Dimension — SHEET 1/1
SAMSUNG ELECTRONICS					SPEC. NO	CODE NO.	VER. 000

9. Packing

9.1 Example of 5.0" VGA TFT-LCD

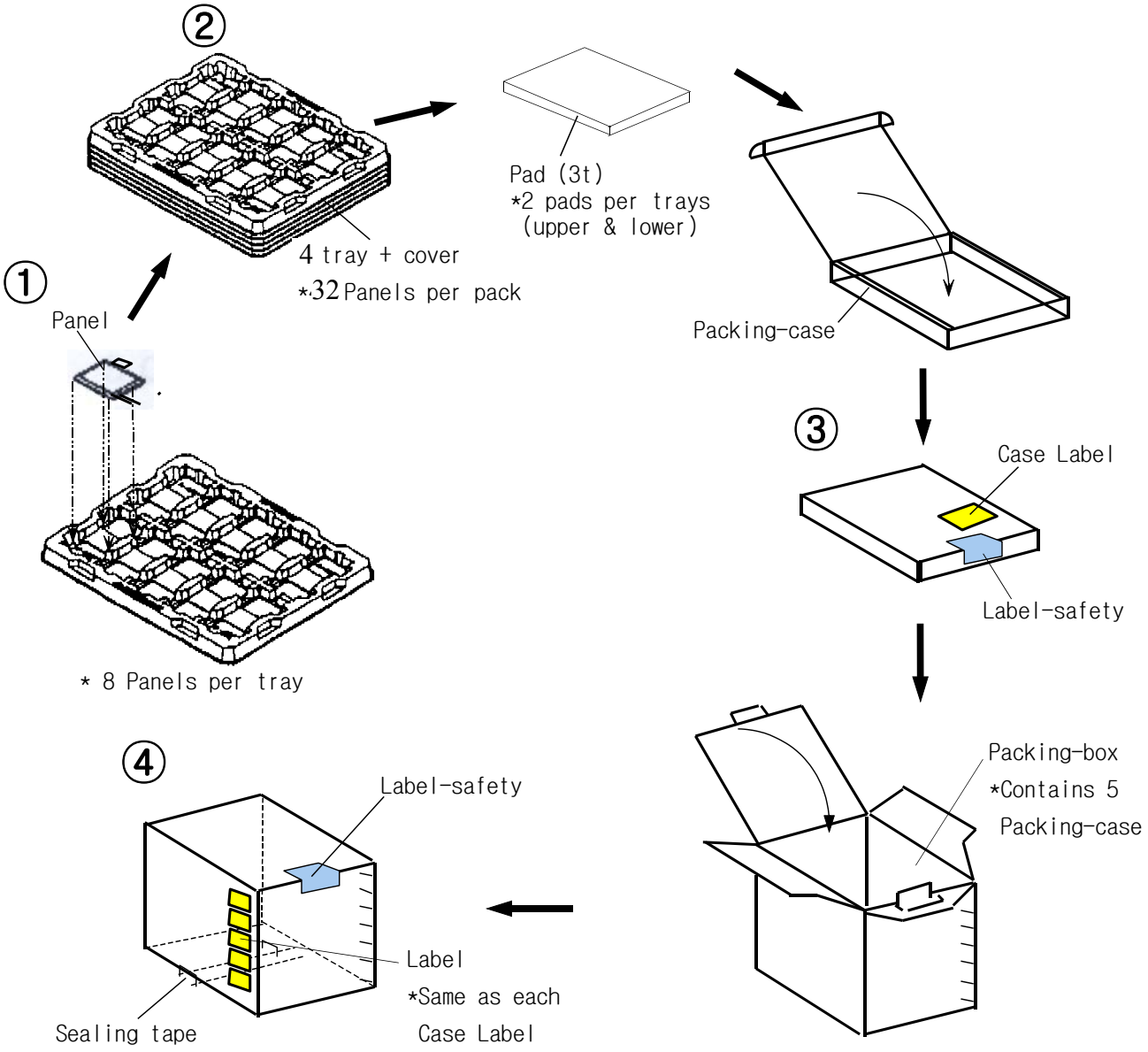

Note (1) Total : Case: Approx. 4.0 Kg
Box: Approx. 20 Kg
Note (2) Size : Case: 490(W) x 342(D) x 58(H)
Box: 505(W) x 355(D) x 319(H)
Note (3) Pad Material : Polyethylene Foam T=3.0
Note (4) Resistance of tray surface : 10^3~$10^6\Omega$
Note (5) ESD of tray surface : 20~100V
Note (6) Place the panels in the tray facing the direction shown in the figure.
Note (7) Place 4 tray and cover(empty tray) and pads inside the packing-case.
Note (8) Place 5 packing-case inside the packing-box.(Affix the label)
Note (9) Seal the packing-box. Affix the label-safety.

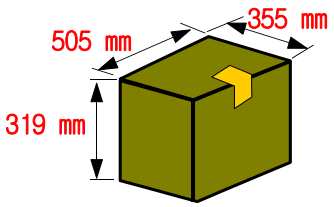

10. Marking & Others

10.1 Example of 5.0" VGA TFT-LCD

(1) Packing case attach

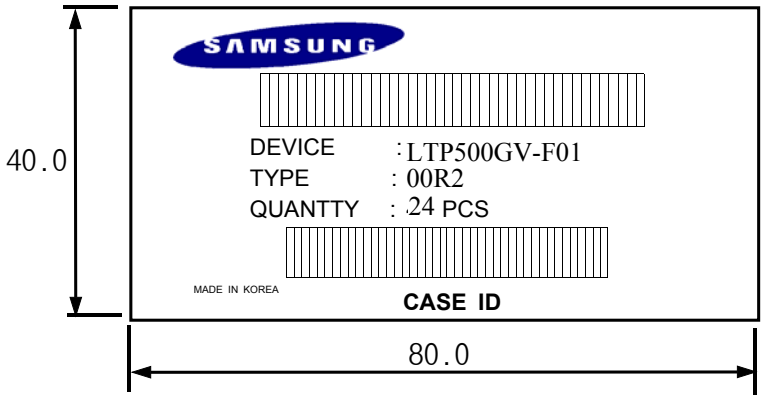

CASE ID : NA 0 00 00001

- Serial No.(00001-99999)
- Week
- Year
- Device

12. General Precautions

12.1 Handling

(a) When the module is assembled, it should be attached to the system firmly. Be careful not to twist and bend the module.

(b) Refrain from strong mechanical shock and / or any force to the module. In addition to damage, this may cause improper operation or damage to the module and back-light unit.

(c) Note that polarizers are very fragile and could be easily damaged. Do not press or scratch the surface harder than a HB pencil lead.

(d) Wipe off water droplets or oil immediately. If you leave the droplets for a long time, Staining and discoloration may occur.

(e) If the surface of the polarizer is dirty, clean it using some absorbent cotton or soft cloth.

(f) The desirable cleaners are water, IPA(Isopropyl Alcohol) or Hexane. Do not use Kepton type materials(ex. Acetone), Ethyl alcohol, Toluene, Ethyl acid or Methyl chloride. It might permanent damage to the polarizer due to chemical reaction.

(g) If the liquid crystal material leaks from the panel, it should be kept away from the eyes or mouth . In case of contact with hands, legs or clothes, it must be washed away thoroughly with soap.

(h) Protect the module from static , it may cause damage to the Integrated Gate Circuit.

(i) Use finger-stalls with soft gloves in order to keep display clean during the incoming inspection and assembly process.

(j) Do not disassemble the module.

(k) Protection film for polarizer on the module shall be slowly peeled off just before use so that the electrostatic charge can be minimized.

(l) Pins of I/F connector shall not be touched directly with bare hands.

12.2 Storage

(a) Do not leave the panel in high temperature, and high humidity for a long time. It is highly recommended to store the module with temperature from 0 to 35°C and relative humidity of less than 70%.

(b) Do not store the TFT-LCD module in direct sunlight.

(c) The module shall be stored in a dark place. It is prohibited to apply sunlight or fluorescent light during the store.

12.3 Operation

(a) Do not connect, disconnect the module in the "Power On" condition.

(b) Power supply should always be turned on/off by the item 3.1 "Power on/off sequence"

12.4 Others

(a) The liquid-crystal is deteriorated by ultraviolet rays. Do not leave it in direct sunlight and strong ultraviolet rays for many hours.

(b) Avoid condensation of water. It may result in improper operation or disconnection of electrode.

(c) Do not exceed the absolute maximum rating value. (the supply voltage variation, input voltage variation, variation in part contents and environmental temperature, and so on)
Otherwise the panel may be damaged.

(d) If the panel displays the same pattern continuously for a long period of time, it can be the situation when the image "Sticks" to the screen.

(e) This panel has its circuitry FPC on the bottom side and should be handled carefully in order not to be stressed.