SAMSUNG ELECTRONICS

Preliminary

TO :

DATE : Jan. 20. 2006

*SAMSUNG TFT-LCD*

# MODEL NO. : LTS166QQ-F04

*Any Modification of Spec is not allowed without SEC's permission.*

Approved by : *K . H . Lee*

**LCD BUSINESS**

**Samsung Electronics Co . , LTD.**

wise view™

Preliminary

# Contents


Revision History ---------- (4)

General Description ---------- (5)

1. Absolute Maximum Ratings ---------- (6)
   - 1.1 Environment
   - 1.2 Electrical Absolute Ratings

2. Optical Characteristics ---------- (8)
   - 2.1 Transmissive Mode

3. Electrical Characteristics ---------- (11)
   - 3.1 TFT-LCD Module
   - 3.2 Back-Light Unit

4. Block Diagram ---------- (13)
   - 4.1 TFT-LCD Module

5. Input Terminal Pin Assignment ---------- (14)
   - 5.1 Input Signal & Power
   - 5.2 Input Signal, Basic Display Colors and Gray Scale of Each Colors

6. Interface Specifications ---------- (15)
   - 6.1 R/W and RS bit Function
   - 6.2 Signal Diagram - M68 Mode Write Case
   - 6.3 Data Format for 8-bit CPU interface
   - 6.4 DC Characteristics
   - 6.5 M68 Mode AC Characteristics

7. Reset ---------- (20)

8. TFT-LCD Driver IC Control Algorithms ---------- (22)
   - 8.1 Power On/Off Sequence, when CPU I/F
   - 8.2 Initializing & Power Setting Sequence
   - 8.3 Display On/Off Sequence
   - 8.4. Sleep / Wake-up Sequence, When CPU I/F
   - 8.5. Stand-by / Wake-up Sequence, When CPU I/F
   - 8.6. 8color-Partial Mode Changing Sequence, When CPU I/F

9. Part List of Components ---------- (28)
   - 9.1 Panel, Driver IC
   - 9.2 FPC & Component
   - 9.3 Back-Light Unit Structure

10. Reliability Test ---------- (31)
   - 10.1 Condition
   - 10.2 Judgement

Preliminary

11. Outline Dimension ---------- (33)
12. Packing ---------- (36)
13. Marking & Others ---------- (37)
13.1 Laser Printing on the back side of TFT-LCD Module
13.2 Packing case & box attach
14. General Precaution ---------- (39)
14.1 Handling
14.2 Storage
14.3 Operation
14.4 Others

# Revision History

Preliminary

| Data | Rev. No. | Page | Summary |
|---|---|---|---|
| Jan,20, 2006 | 000 | | Released Rev.000 |

# General Description

## * Description

LTS166QQ-F04 is a STR(Super Transmissive with excellent Reflectivity) type color active matrix TFT(Thin Film Transistor) LCD(Liquid Crystal Display) that uses amorphous silicon TFT as a switching device. This model is composed of a TFT-LCD panel, driver circuit and back-light unit.

The resolution of a 1.66" contains 128 x 160 pixels and can display up to 65K colors.

## * Features

- STR type and back-light with two LEDs are available.
- TN(Twisted Nematic) Mode.
- Full, Still, Partial, Sleep, Stand-by & 65k/8-color mode are available.
- Low Power consumption.

## * Applications

- Display terminals for cellular phone.

## * General Information

| Item | Specification | Unit | Note |
|---|---|---|---|
| Display area | 26.304(H) x 32.880(V) | mm | - |
| Driver element | a-Si TFT active matrix | - | - |
| Display colors | 65K | colors | - |
| Number of pixels | 128(H) x 160(V) | pixel | - |
| Pixel arrangement | RGB vertical stripe | - | - |
| Pixel pitch | 0.2055(H) x 0.2055(V) | mm | - |
| Display mode | Normally White | - | - |
| Viewing direction | 6 | o'clock | - |
| Surface Treatment | Anti Reflect Coating 2H | - | - |

## * Mechanical Information

| Item | | Min. | Typ. | Max. | Unit | Note |
|---|---|---|---|---|---|---|
| Module size | Horizontal(H) | 31.92 | 32.12 | 32.32 | mm | (1) |
| | Vertical(V) | 43.43 | 43.63 | 43.83 | mm | (1) |
| | Depth(D) | 2.95 | 3.05 | 3.25 | mm | (1) |
| Weight | | - | - | 9 | g | (1) |

Note (1) Without FPC and guide boss.

Refer to the Outline Dimension in the page 36 for further information.

Preliminary

# 1. Absolute Maximum Ratings

1.1 Environment

| ITEM | MIN | MAX | REMARK |
|---|---|---|---|
| Storage Temperature | -35℃ | 80℃ | Note(1) |
| Operating Temperature | -20℃ | 60℃ | Note(2) |

Note(1) 90%RH maximum humidity, 60℃ maximum wet-bulb temperature

(2) When operated at a temperature lower than 0℃, the LCD worked slowly and the screen appeared low-contrast images due to the characteristics of LC(Liquid Crystal).

(3) If any fixed pattern is displayed on LCD for long time, image-sticking phenomenon may occur.

(4) Please operate a LCD module on the basis of the recommended S/W(Register DATA). If you want to change any part of the S/W, you must take Samsung's confirmation.

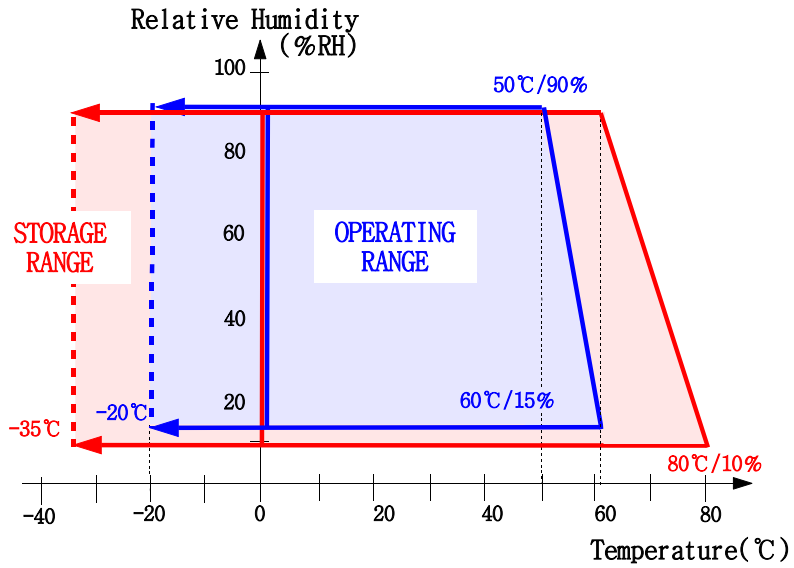


Temperature & Humidity Graph at Absolute Environment

## 1.2 Electrical Absolute Ratings

(1) TFT-LCD Module (Ta = 25 ± 2°C, $V_{SS}$=GND=0)

| Characteristics | Symbol | Min. | Max. | Unit | Note |
|---|---|---|---|---|---|
| Interface I/O voltage | VCC | -0.3 | 3.0 | V | |
| Analog circuit voltage | VCI | -0.3 | 5.0 | V | |

(2) Back-Light Unit

(Ta = 25 ± 2°C)

| Item | Symbol | Min. | Max. | Unit. | Note |
|---|---|---|---|---|---|
| Current | $I_B$ | - | 25 | mA | (1) |

Note (1) Permanent damage to the device may occur if maximum values are exceeded or reverse voltage is loaded.
Functional operation should be restricted to the conditions described under normal operating conditions.
2 LEDs, serial type.

Preliminary

## 2. Optical Characteristics

The following items are measured under stable conditions. The optical characteristics should be measured in a dark room or equivalent state with the methods shown in Note (2).
Measuring equipment: LCD-7200, BM-5A, BM-7, PR-650, EZ-Contrast

### 2.1 Optical Characteristics of TFT-LCD

(Ta = 25 ± 2°C, V = 2.8V, $I_B$ = 15 mA) (A)

| Item | | Symbol | Condition | Min. | Typ. | Max. | Unit | Note |
|---|---|---|---|---|---|---|---|---|
| Reflectance | | Rf | B/L Off | - | 2 | - | % | (3) LCD-7200 |
| Contrast ratio (Center point) | | C/R | NOTE (1) Φ=0 Θ=0 Normal Viewing Angle B/L On | 200 | 250 | - | - | (4) BM-5A |
| Luminance of white (Center point) | | TL | | 140 | 180 | - | cd/m² | (5) BM-5A |
| Response time | Rising:Tr | Tr+Tf | | - | - | 40 | msec | (6) BM-7 |
| | Falling:Tf | | | | | | | |
| Color chromaticity (CIE 1931) | White | Wx | | 0.235 | 0.335 | 0.435 | - | (7) PR-650 |
| | | Wy | | 0.253 | 0.353 | 0.453 | | |
| | Red | Rx | | 0.490 | 0.590 | 0.690 | | |
| | | Ry | | 0.257 | 0.357 | 0.457 | | |
| | Green | Gx | | 0.250 | 0.350 | 0.450 | | |
| | | Gy | | 0.421 | 0.521 | 0.621 | | |
| | Blue | Bx | | 0.054 | 0.154 | 0.254 | | |
| | | By | | 0.063 | 0.163 | 0.263 | | |
| View angle | Hor. | ΘL | C/R≥10 B/L On | 40 | 45 | - | Degrees | (8) Ez-Contrast |
| | | ΘR | | 40 | 45 | - | | |
| | Ver. | ΦH | | 40 | 45 | - | | |
| | | ΦL | | 10 | 15 | - | | |

Note (A) : This condition will be changed as the evaluation circumstance of SEC.

Note (1) If product is exposed to high temperatures for extended time, there is a possibility of the polarizer film damage which could degrade the optical characteristics.

Note (2) Test Equipment Setup

After stabilizing and leaving the panel alone at a given temperature for 30 min , the measurement should be executed. Measurement should be executed in a stable, windless, and dark room. 30 min after lighting the back-light. This should be measured in the center of screen.

Environment condition : Ta = 25 ± 2 °C

- Back-Light On condition

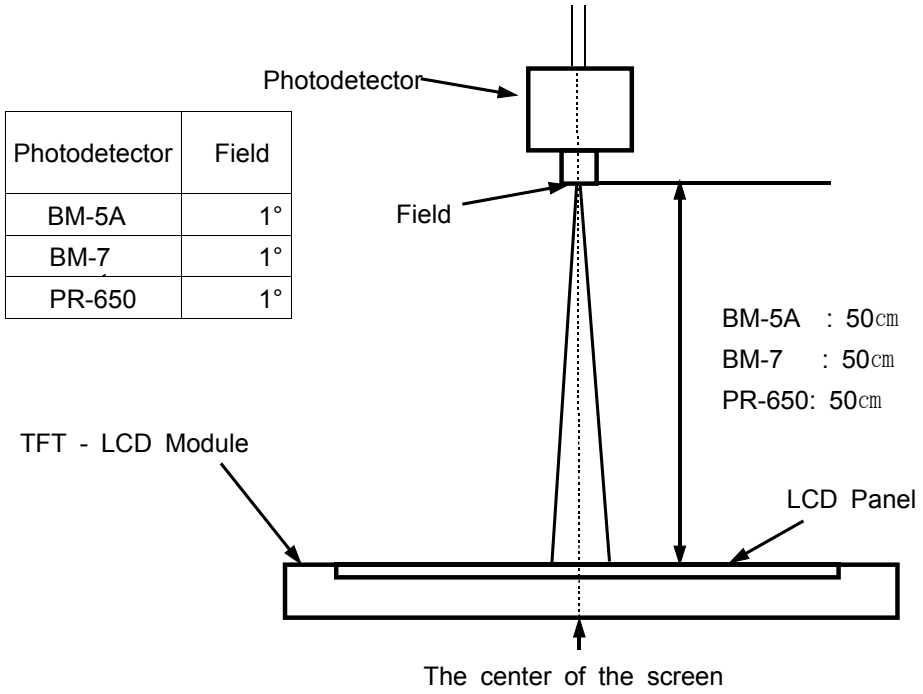


| Photodetector | Field |
|---|---|
| BM-5A | 1° |
| BM-7 | 1° |
| PR-650 | 1° |

Note (3) Definition of Reflectance : The reflectance is relative quantity to the standard white $BaSO_4$ or MgO plate that the reflectance of the standard white plate is the 100%.

$$\text{Reflectance} = \frac{\dfrac{\text{Light intensity of the reflected light on LCD}}{\text{Input intensity of the reflected light on BaSO4 plate}}}{\dfrac{\text{Output intensity of the reflected light on BaSO4 plate}}{\text{Input intensity of the reflected light on BaSO4 plate}}} \times 100\%$$

Note (4) Definition of Contrast Ratio (C/R) : Ratio of gray max (Gmax) & gray min (Gmin) at the center point

$$CR = \frac{G\max}{G\min}$$

* Gmax : Luminance with all pixels white

* Gmin : Luminance with all pixels black

Note (5) Definition of Luminance of White : Luminance of white at the center point

| | |
|---|---|
| Light Source of Back-Light Unit | 2 LEDs, Serial Type |
| LED Type & Maker | Chip Type White LED, NICHIA, JAPAN |
| LED Product Code & Rank | NESW008BT |

Note (6) Definition of Response time : Sum of Tr ,Tf

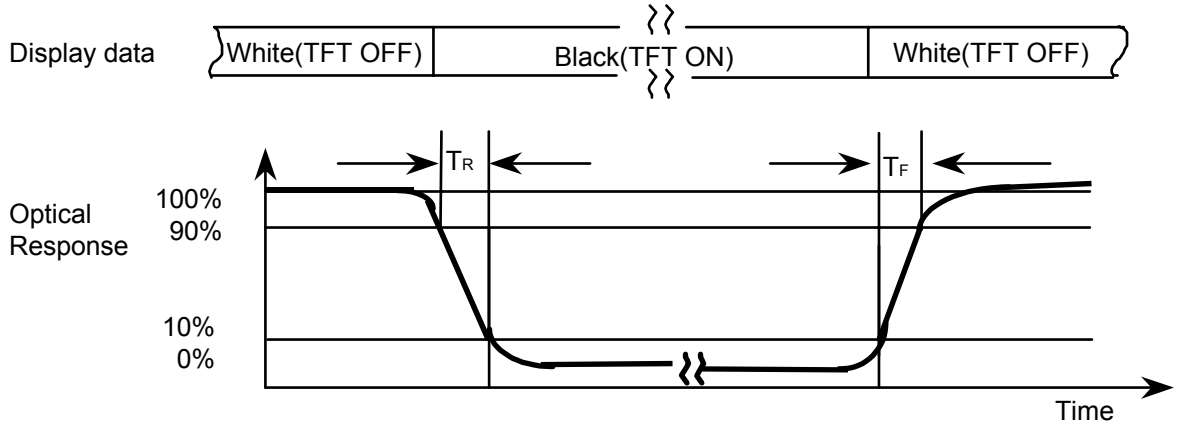


Note (7) Definition of Color Chromaticity (CIE 1931)

Color coordinate of white & red, green, blue at center point.

Note (8) Definition of Viewing Angle

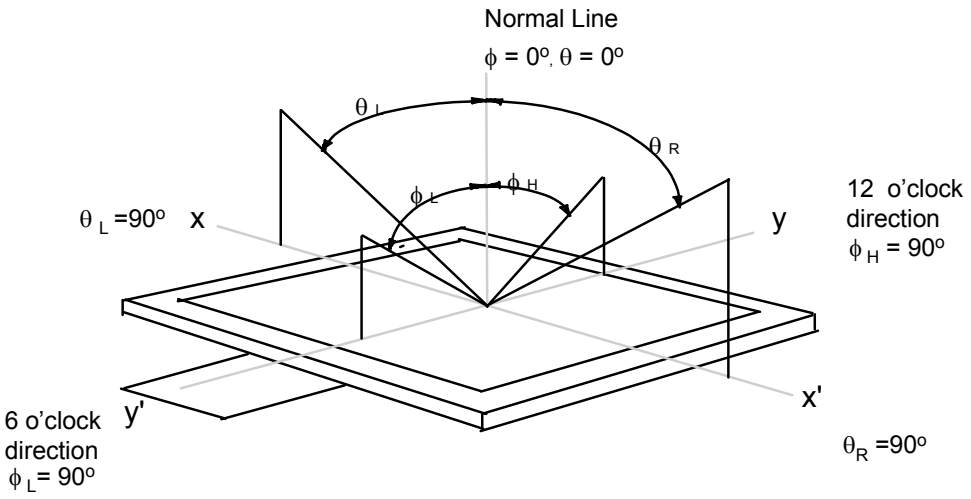

### 3.1 TFT-LCD Module

(Ta = 25 ± 2°C)

| Item | | Symbol | Min. | Typ. | Max. | Unit | Note |
|---|---|---|---|---|---|---|---|
| Interface I/O voltage | | $V_{CC}$ | 2.75 | 2.8 | 2.85 | V | - |
| DC/DC supply voltage | | $V_{CI}$ | 2.75 | 2.8 | 2.85 | V | - |
| Power Consumtion | Stand by | Istb | - | - | 0.08 | mW | (1) |
| | Sleep | $I_{SLP}$ | - | - | 0.15 | | (2) |
| | 8-Color Partial | $I_{8CP}$ | - | TBD | TBD | | (3),(6) |
| | Still | $I_{STL}$ | | 12 | 15 | | (4) |
| | Full | $I_F$ | - | 15 | 19 | | (5),(6) |
| Internal refresh frequency | | $f_{Refresh}$ | 70 | 72 | 74 | Hz | - |

* To prevent a latch-up or DC operation of the LCD module, the power on/off sequence should be as the Chapter 8. TFT-LCD Driver IC Control Algorithms

Note (1) $V_{CC}$ = $V_{CI}$ = 2.8V, Stand-by Mode, No input signal.
(2) $V_{CC}$ = $V_{CI}$ = 2.8V, Sleep Mode, No input signal.
(3) $V_{CC}$ = $V_{CI}$ = 2.8V, 24line & 8-color Partial Mode, Frame Inversion. $f_{Refresh}$ = 65Hz No input signal, Power save mode..
(4) $V_{CC}$ = $V_{CI}$ = 2.8V, Line Inversion, .$f_{Refresh}$ = 72Hz, No input signal.
(5) $V_{CC}$ = $V_{CI}$ = 2.8V, Line Inversion, .$f_{Refresh}$ = 72Hz, 15Hz picture input signal.
(6) Dissipation current check pattern

■ (128 x 160) 0 Gray Black Pattern

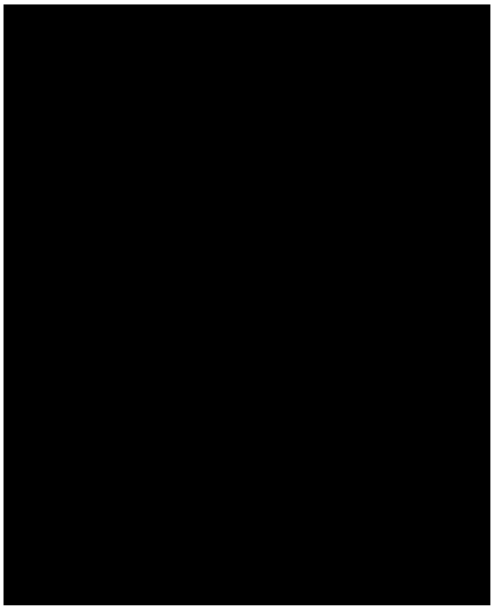

■ (128 x 24) 0 Gray Partial Black Pattern

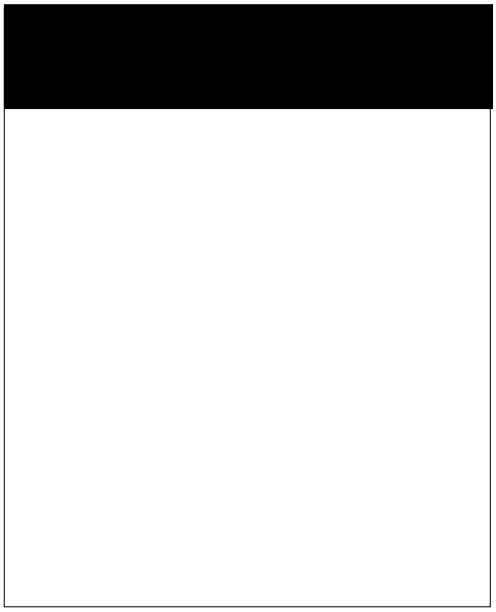

### 3.2 Back-Light Unit

The back-light system is an edge-lighting type with three white LED(Light Emitting Diode)s.

(Ta=25 ± 2°C)

| Item | Symbol | Min. | Typ. | Max. | Unit | Note |
|---|---|---|---|---|---|---|
| Current | $I_B$ | - | 15 | 20 | mA | (1) |
| Power Consumption | $P_{BL}$ | - | 100 | 160 | mW | (2) |
| Life Time | $LT_{BL}$ | 5,000 | - | - | Hour | (3) |

Note (1) Two LEDs serial type.

(2) Where $I_B$ = 15mA, $V_B = P_{BL} / I_B$

(3) Condition

- 70% relative Luminance after 5,000 hr
- 15mA, Ta = 25 ± 2°C
- No ESD defect during 5,000 hr
- No critical shock in back-light unit

Preliminary

# 4. Block Diagram

## 4.1 TFT-LCD Module (Interface System Structure)

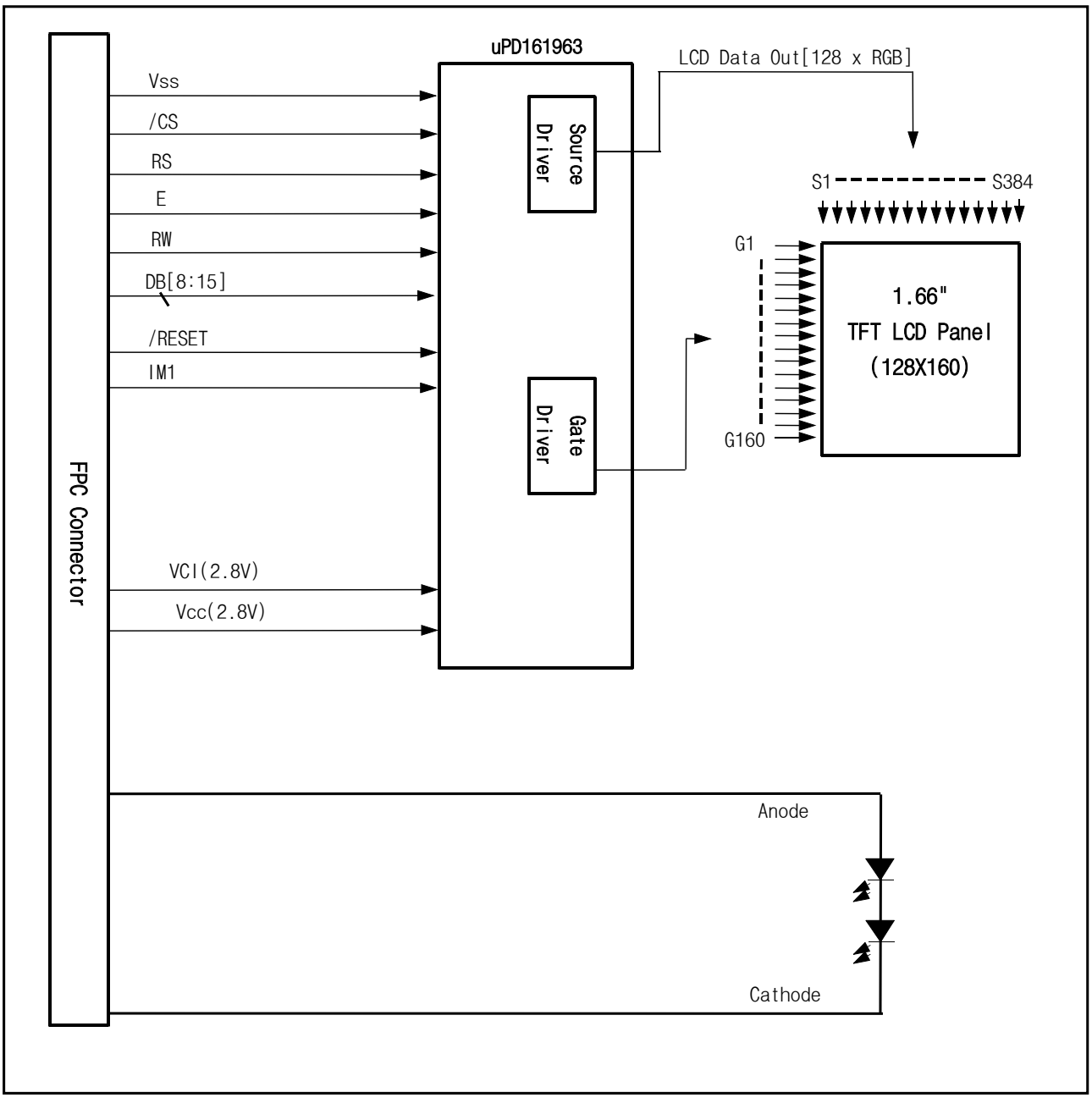

Preliminary

## 5. Input Terminal Pin Assignment

### 5.1 Input Signal & Power ( Connector : NAIS AXK7L20227 ↔ AXK8L20125 )

| Pin No | Symbol | Description | Remark |
|---|---|---|---|
| 1 | VCC | Interface I/O voltage | - |
| 2 | IM1 | M68 / i80-system selection | Note (1) |
| 3 | DB15 | Data 7 | - |
| 4 | DB14 | Data 6 | Input/Output |
| 5 | DB13 | Data 5 | Input/Output |
| 6 | DB12 | Data 4 | Input/Output |
| 7 | RW | R/W selection in M68-mode(L:Write, H:Read) | Input, Note(2) |
| 8 | RS | Command(L) / Data(H) | Input |
| 9 | /CS | Chip Selesct | Input |
| 10 | Vss | Ground | - |
| 11 | Vss | Ground | - |
| 12 | E | R/W operation enable in M68-mode | Input, Note(3) |
| 13 | /RESET | System Reset | Input |
| 14 | DB11 | Data 3 | Input/Output |
| 15 | DB10 | Data 2 | Input/Output |
| 16 | DB9 | Data 1 | Input/Output |
| 17 | DB8 | Data 0 | Input/Output |
| 18 | Cathode | LED Power Ground | - |
| 19 | Anode | LED Power Input Terminal | - |
| 20 | VCI | DC/DC supply votage | - |

Note (1) L: M68 Mode, H: i80 Mode
(2) /RD (Data Read) in i80 Mode
(3) /WR (Data Write) in i80 Mode

## 5.2 Input Signal,Basic Display Colors and Gray Scale of Each Colors

| COLOR | DISPLAY | DATA SIGNAL | | | | | | | | | | | | | | | | GRAY SCALE LEVEL |
|---|---|---|---|---|---|---|---|---|---|---|---|---|---|---|---|---|---|---|
| | | RED | | | | | GREEN | | | | | | BLUE | | | | | |
| | | R0 | R1 | R2 | R3 | R4 | G0 | G1 | G2 | G3 | G4 | G5 | B0 | B1 | B2 | B3 | B4 | |
| BASIC COLOR | BLACK | 0 | 0 | 0 | 0 | 0 | 0 | 0 | 0 | 0 | 0 | 0 | 0 | 0 | 0 | 0 | 0 | - |
| | BLUE | 0 | 0 | 0 | 0 | 0 | 0 | 0 | 0 | 0 | 0 | 0 | 1 | 1 | 1 | 1 | 1 | - |
| | GREEN | 0 | 0 | 0 | 0 | 0 | 1 | 1 | 1 | 1 | 1 | 1 | 0 | 0 | 0 | 0 | 0 | - |
| | CYAN | 0 | 0 | 0 | 0 | 0 | 1 | 1 | 1 | 1 | 1 | 1 | 1 | 1 | 1 | 1 | 1 | - |
| | RED | 1 | 1 | 1 | 1 | 1 | 0 | 0 | 0 | 0 | 0 | 0 | 0 | 0 | 0 | 0 | 0 | - |
| | MAGENTA | 1 | 1 | 1 | 1 | 1 | 0 | 0 | 0 | 0 | 0 | 0 | 1 | 1 | 1 | 1 | 1 | - |
| | YELLOW | 1 | 1 | 1 | 1 | 1 | 1 | 1 | 1 | 1 | 1 | 1 | 0 | 0 | 0 | 0 | 0 | - |
| | WHITE | 1 | 1 | 1 | 1 | 1 | 1 | 1 | 1 | 1 | 1 | 1 | 1 | 1 | 1 | 1 | 1 | - |
| GRAY SCALE OF RED | BLACK | 0 | 0 | 0 | 0 | 0 | 0 | 0 | 0 | 0 | 0 | 0 | 0 | 0 | 0 | 0 | 0 | R0 |
| | DARK | 1 | 0 | 0 | 0 | 0 | 0 | 0 | 0 | 0 | 0 | 0 | 0 | 0 | 0 | 0 | 0 | R1 |
| | ↑ | 0 | 1 | 0 | 0 | 0 | 0 | 0 | 0 | 0 | 0 | 0 | 0 | 0 | 0 | 0 | 0 | R2 |
| | | : | : | : | : | : | : | : | : | : | : | : | : | : | : | : | : | R3~R28 |
| | | : | : | : | : | : | : | : | : | : | : | : | : | : | : | : | : | |
| | ↓ | 1 | 0 | 1 | 1 | 1 | 0 | 0 | 0 | 0 | 0 | 0 | 0 | 0 | 0 | 0 | 0 | R29 |
| | LIGHT | 0 | 1 | 1 | 1 | 1 | 0 | 0 | 0 | 0 | 0 | 0 | 0 | 0 | 0 | 0 | 0 | R30 |
| | RED | 1 | 1 | 1 | 1 | 1 | 0 | 0 | 0 | 0 | 0 | 0 | 0 | 0 | 0 | 0 | 0 | R31 |
| GRAY SCALE OF GREEN | BLACK | 0 | 0 | 0 | 0 | 0 | 0 | 0 | 0 | 0 | 0 | 0 | 0 | 0 | 0 | 0 | 0 | G0 |
| | DARK | 0 | 0 | 0 | 0 | 0 | 1 | 0 | 0 | 0 | 0 | 0 | 0 | 0 | 0 | 0 | 0 | G1 |
| | ↑ | 0 | 0 | 0 | 0 | 0 | 0 | 1 | 0 | 0 | 0 | 0 | 0 | 0 | 0 | 0 | 0 | G2 |
| | | : | : | : | : | : | : | : | : | : | : | : | : | : | : | : | : | G3~G60 |
| | | : | : | : | : | : | : | : | : | : | : | : | : | : | : | : | : | |
| | ↓ | 0 | 0 | 0 | 0 | 0 | 1 | 0 | 1 | 1 | 1 | 1 | 0 | 0 | 0 | 0 | 0 | G61 |
| | LIGHT | 0 | 0 | 0 | 0 | 0 | 0 | 1 | 1 | 1 | 1 | 1 | 0 | 0 | 0 | 0 | 0 | G62 |
| | GREEN | 0 | 0 | 0 | 0 | 0 | 1 | 1 | 1 | 1 | 1 | 1 | 0 | 0 | 0 | 0 | 0 | G63 |
| GRAY SCALE OF BLUE | BLACK | 0 | 0 | 0 | 0 | 0 | 0 | 0 | 0 | 0 | 0 | 0 | 0 | 0 | 0 | 0 | 0 | B0 |
| | DARK | 0 | 0 | 0 | 0 | 0 | 0 | 0 | 0 | 0 | 0 | 0 | 1 | 0 | 0 | 0 | 0 | B1 |
| | ↑ | 0 | 0 | 0 | 0 | 0 | 0 | 0 | 0 | 0 | 0 | 0 | 0 | 1 | 0 | 0 | 0 | B2 |
| | | : | : | : | : | : | : | : | : | : | : | : | : | : | : | : | : | B3~B28 |
| | | : | : | : | : | : | : | : | : | : | : | : | : | : | : | : | : | |
| | ↓ | 0 | 0 | 0 | 0 | 0 | 0 | 0 | 0 | 0 | 0 | 0 | 1 | 0 | 1 | 1 | 1 | B29 |
| | LIGHT | 0 | 0 | 0 | 0 | 0 | 0 | 0 | 0 | 0 | 0 | 0 | 0 | 1 | 1 | 1 | 1 | B30 |
| | BLUE | 0 | 0 | 0 | 0 | 0 | 0 | 0 | 0 | 0 | 0 | 0 | 1 | 1 | 1 | 1 | 1 | B31 |

Note) Definition of Gray :

Rn : Red Gray, Gn : Green Gray, Bn : Blue Gray (n = Gray level)

Input Signal : 0 = Low level voltage, 1 = High level voltage

# 6. Interface Specifications

## 6.1 R/W and RS bit Function

| E | R/W | RS | Operation |
|---|---|---|---|
| 1 | 0 | 0 | Set index register |
| 1 | 1 | 0 | Read status |
| 1 | 0 | 1 | Write instruction or RAM data |
| 1 | 1 | 1 | Read instruction or RAM data |

## 6.2 Signal Diagram - M68 Mode Write Case

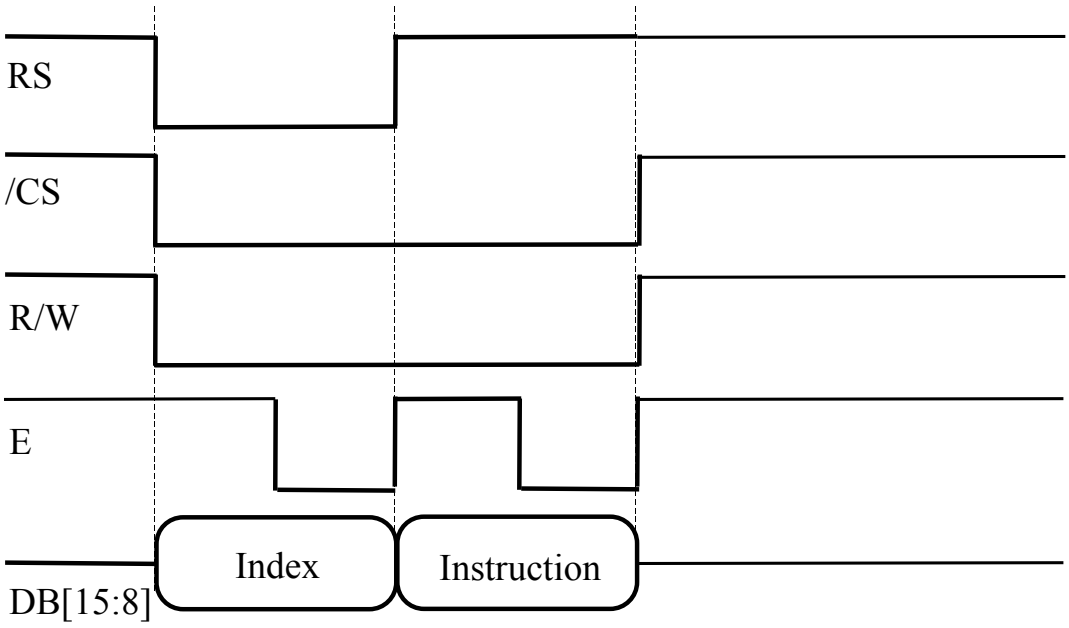

## 6.3 Data Format for 8-bit CPU Interface

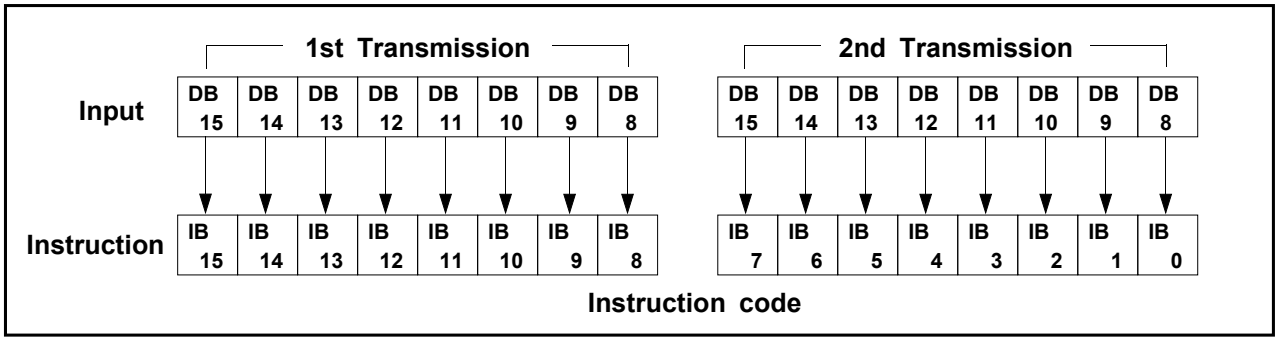


**Instruction Write Format**

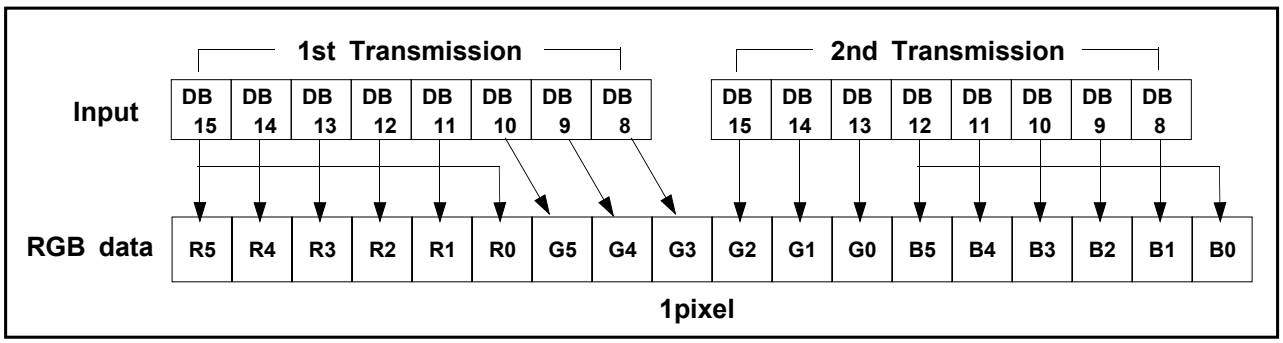


**RAM Write Format**

## 6.4 DC Characteristics

(Ta = -20 to + 60°C, $V_{CC}$ = 2.75 to 2.85V, GND = 0V)

| Item | Symbol | Min. | Typ. | Max. | Unit |
|---|---|---|---|---|---|
| Input High voltage | $V_{IH}$ | $0.7V_{CC}$ | - | $V_{CC}$ | V |
| Input Low voltage | $V_{IL}$ | 0 | - | $0.3V_{CC}$ | |
| Output High voltage | $V_{OH}$ | $V_{CC}$-0.5 | - | $V_{CC}$ | |
| Output Low voltage | $V_{OL}$ | 0 | - | 0.5 | |

## 6.5 AC Characteristics

### 6.5.1 M68 mode

**AC Characteristics, 68 Mode, AM = 0 ($V_{SS}$ = 0 V, TA = –30 to +85°C)**

| Parameter | | Symbol | VDD = 1.8 V VCC = 1.8 to 3.3 V | | VDD = 2.0V VCC = 2.3 to 3.3 V | | Unit |
|---|---|---|---|---|---|---|---|
| | | | MIN. | MAX. | MIN. | MAX. | |
| Cycle time | Write | $t_{CYCW68}$ | 120 | | 100 | | ns |
| | Read | $t_{CYCW68}$ | 500 | | 500 | | ns |
| Pulse rise/fall time | | $t_R$, $t_F$ | | 25 | | 25 | ns |
| E pulse width high | Write | $t_{WHW68}$ | 40 | | 40 | | ns |
| | Read | $t_{WHW68}$ | 250 | | 250 | | ns |
| E pulse width low | Write | $t_{WLW68}$ | 40 | | 40 | | ns |
| | Read | $t_{WLW68}$ | 200 | | 200 | | ns |
| RW, RS, and CSB setup time | | $t_{AS68}$ | 12 | | 10 | | ns |
| RW, RS, and CSB hold time | | $t_{AH68}$ | 2 | | 2 | | ns |
| Write data setup time | | $t_{WDS68}$ | 60 | | 60 | | ns |
| Write data hold time | | $t_{WDH68}$ | 2 | | 2 | | ns |
| Read data setup time | | $t_{RDD68}$ | | 200 | | 200 | ns |
| Read data hold time | | $t_{RDH68}$ | 5 | | 5 | | ns |

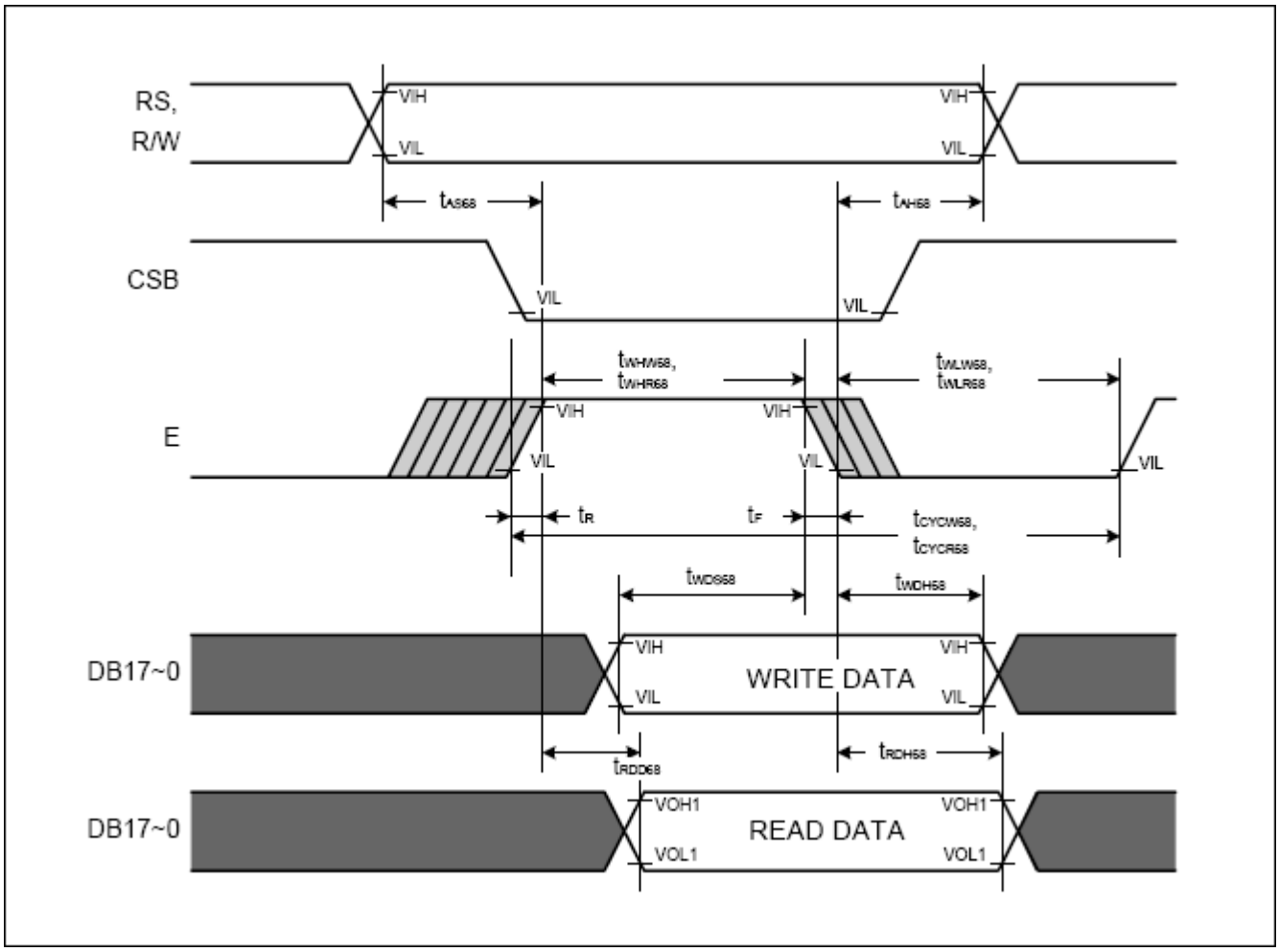

### 6.5.2 i80 mode

**AC Characteristics, 80 Mode, AM = 0 ($V_{SS}$ = 0 V, $T_A$ = –30 to +85°C)**

| Parameter | | Symbol | VDD = 1.8 V VCC = 1.8 to 3.3 V | | VDD = 2.0V VCC = 2.3 to 3.3 V | | Unit |
|---|---|---|---|---|---|---|---|
| | | | MIN. | MAX. | MIN. | MAX. | |
| Cycle time | Write | $t_{CYCW80}$ | 120 | | 100 | | ns |
| | Read | $t_{CYCW80}$ | 500 | | 500 | | ns |
| Pulse rise/fall time | | $t_R$, $t_F$ | | 25 | | 25 | ns |
| WR low pulse width | | $t_{WLW80}$ | 40 | | 40 | | ns |
| WR high pulse width | | $t_{WHW80}$ | 40 | | 40 | | ns |
| RD low pulse width | | $t_{WLW80}$ | 250 | | 250 | | ns |
| RD high pulse width | | $t_{WHW80}$ | 200 | | 200 | | ns |
| RW, RS, and CSB setup time | | $t_{AS80}$ | 10 | | 10 | | ns |
| RW, RS, and CSB hold time | | $t_{AH80}$ | 2 | | 2 | | ns |
| Write data setup time | | $t_{WDS80}$ | 60 | | 60 | | ns |
| Write data hold time | | $t_{WDH80}$ | 2 | | 2 | | ns |
| Read data setup time | | $t_{RDD80}$ | | 200 | | 200 | ns |
| Read data hold time | | $t_{RDH80}$ | 5 | | 5 | | ns |

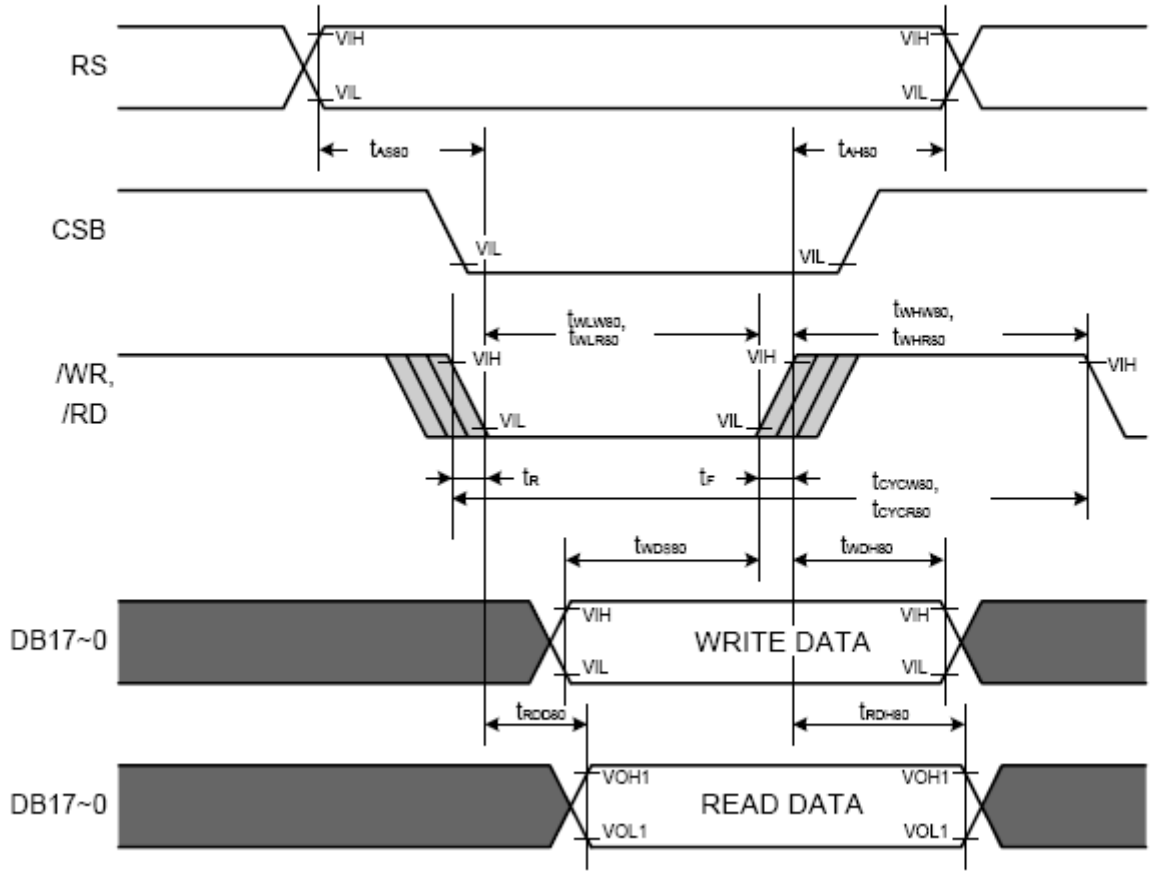

## 7. Reset

If the /RESET input becomes L or the reset command is input, the each register to its default value. These default values are listed in the table below.

| Reg No. | IB15 | IB14 | IB13 | IB12 | IB11 | IB10 | IB9 | IB8 | IB7 | IB6 | IB5 | IB4 | IB3 | IB2 | IB1 | IB0 | Register Name / Description |
|---|---|---|---|---|---|---|---|---|---|---|---|---|---|---|---|---|---|
| IR | | | | | | | | | | ID6 | ID5 | ID4 | ID3 | ID2 | ID1 | ID0 | Index / Sets the index register value |
| SR | L7 | L6 | L5 | L4 | L3 | L2 | L1 | L0 | 0 | 0 | 0 | 0 | 0 | 0 | 0 | 0 | Status read / Read the internal status |
| R00h | * | * | * | * | * | * | * | * | * | * | * | * | * | * | * | 1 | Start Oscillation<br>Device Code read |
| R01h | 0 | 0 | 0 | 0 | 0 | 0 | 0 | 0 | 0 | 0 | 0 | 0 | 1 | 1 | 0 | 0 | Driving output Control<br>EPL: set polrarity of ENABLE pin while using RGB interface.<br>SM: Gate driver division drive control<br>GS: Gate driver shift direction<br>SS: Source driver shift direction<br>NL3-0: Number of driving line |
| R02h | 0 | 0 | 0 | 0 | 0 | 0 | 0 | 0 | 0 | 0 | 0 | 0 | 0 | 0 | 0 | 0 | LCD-Driving-Waveform control<br>F/L: Line/Frame inversion setting |
| R03h | 0 | 0 | 0 | 0 | 0 | 0 | 0 | 0 | 0 | 0 | 1 | 1 | 0 | 0 | 0 | 0 | Entry Mode<br>BGR: RGB swap control<br>I/D1-0: Address counter increment/decrement control<br>AM: horizontal/vertical RAM update control |
| R07h | 0 | 0 | 0 | 0 | 0 | 0 | 0 | 0 | 0 | 0 | 0 | 0 | 0 | 0 | 0 | 0 | Display Control<br>PR1-0: Non-display area source output control<br>SPT: 1st/2nd partial display enable<br>GON: Gate OFF to be VSS<br>DTE: DISPTMG to be VSS<br>CL: 8-color display mode enable<br>REV: display area inversion drive<br>D1-0: Source output control |
| R08h | 0 | 0 | 0 | 0 | 0 | 1 | 0 | 1 | 0 | 0 | 0 | 0 | 0 | 0 | 1 | 1 | Blank period Control<br>FP3-0: Front porch setting<br>BP3-0: Back porch setting |
| R0Bh | 0 | 0 | 0 | 0 | 0 | 0 | 0 | 0 | 0 | 0 | 0 | 0 | 0 | 0 | 0 | 0 | Frame Cycle control<br>DIV1-0: division ratio of internal clock setting<br>RTN3-0: Set 1H period |
| R0Ch | 0 | 0 | 0 | 0 | 0 | 0 | 0 | 0 | 0 | 0 | 0 | 0 | 0 | 0 | 0 | 0 | External display Interface control<br>RM: Specifiy the interface for RAM access<br>DIM1-0: Specify the display operation mode<br>RIM: Specify the RGB-I/F mode |
| R10h | 0 | 0 | 0 | 0 | 0 | 0 | 0 | 0 | 0 | 0 | 0 | 0 | 0 | 0 | 0 | 0 | Power Control 1<br>VISL1-0: Adjust VDCI voltage(moved)<br>SAP2-1: Specify the source output amplifier bias current<br>BT2-0: Specify the set-up number of DC/DC converter<br>DC2-0: Set the divided number of DC/DC converter clock<br>AP2-0: Specify the amplifier bias current for power circuit<br>SLP: Set Sleep mode<br>STB: Set Stand-by mode |
| R11h | 0 | 0 | 0 | 0 | 0 | 0 | 0 | 0 | 0 | 0 | 0 | 0 | 0 | 0 | 0 | 0 | Power Control 2<br>VRN14-10: gamma amplitude setting (negative polarity)<br>VRP14-10: gamma amplitude setting (positive polarity) |
| R12h | 0 | 0 | 0 | 0 | 0 | 0 | 0 | 0 | 0 | 0 | 0 | 0 | 0 | 0 | 0 | 0 | Power Control 3<br>VC2-0: Set reference voltage of VREFS |

| | | | | | | | | | | | | | | | | | |
|---|---|---|---|---|---|---|---|---|---|---|---|---|---|---|---|---|---|
| R13h | 0 | 0 | 0 | 0 | 1 | 0 | 0 | 0 | 0 | 0 | 0 | 0 | 0 | 0 | 0 | 0 | Power Control 4<br>VCMR: Select VCOMH voltage adjusting method<br>PON: Power circuit ON/OFF setting<br>VRH3-0: Set VGM voltage |
| R14h | 0 | 0 | 0 | 0 | 0 | 0 | 0 | 0 | 0 | 0 | 0 | 0 | 0 | 0 | 0 | 0 | Poewr Control 5<br>COMG: VCOML voltage level negative voltage setting<br>VDV4-0: COM output amplitude setting<br>VCM4-0: VCOMH voltage level setting |
| R21h | 0 | 0 | 0 | 0 | 0 | 0 | 0 | 0 | 0 | 0 | 0 | 0 | 0 | 0 | 0 | 0 | RAM address register<br>AD15-AD0: |
| R30h | 0 | 0 | 0 | 0 | 0 | 0 | 0 | 0 | 0 | 0 | 0 | 0 | 0 | 0 | 0 | 0 | Gamma control register 1<br>PKP12-10, PKP02-00: Micro adjustment setting |
| R31h | 0 | 0 | 0 | 0 | 0 | 0 | 0 | 0 | 0 | 0 | 0 | 0 | 0 | 0 | 0 | 0 | Gamma control register 2<br>PKP32-30, PKP22-20: Micro adjustment setting |
| R32h | 0 | 0 | 0 | 0 | 0 | 0 | 0 | 0 | 0 | 0 | 0 | 0 | 0 | 0 | 0 | 0 | Gamma control register 3<br>PKP52-50, PKP42-40: Micro adjustment setting |
| R33h | 0 | 0 | 0 | 0 | 0 | 0 | 0 | 0 | 0 | 0 | 0 | 0 | 0 | 0 | 0 | 0 | Gamma control register 4<br>PRP12-10, PRP02-00: Gradient adjustment setting |
| R34h | 0 | 0 | 0 | 0 | 0 | 0 | 0 | 0 | 0 | 0 | 0 | 0 | 0 | 0 | 0 | 0 | Gamma control register 5<br>PKN12-10, PKN02-00: Micro adjustment setting |
| R35h | 0 | 0 | 0 | 0 | 0 | 0 | 0 | 0 | 0 | 0 | 0 | 0 | 0 | 0 | 0 | 0 | Gamma control register 6<br>PKN32-30, PKN22-20: Micro adjustment setting |
| R36h | 0 | 0 | 0 | 0 | 0 | 0 | 0 | 0 | 0 | 0 | 0 | 0 | 0 | 0 | 0 | 0 | Gamma control register 7<br>PKN52-50, PKN42-40: Micro adjustment setting |
| R37h | 0 | 0 | 0 | 0 | 0 | 0 | 0 | 0 | 0 | 0 | 0 | 0 | 0 | 0 | 0 | 0 | Gamma control register 8<br>PRN12-10, PRN02-00: Gradient adjustment setting |
| R38h | 0 | 0 | 0 | 0 | 0 | 0 | 0 | 0 | 0 | 0 | 0 | 0 | 0 | 0 | 0 | 0 | Power Control 3<br>VRN04-00: gamma amplitude setting (negative polarity)<br>VRP04-00: gamma amplitude setting (positive polarity) |
| R40h | 0 | 0 | 0 | 0 | 0 | 0 | 0 | 0 | 0 | 0 | 0 | 0 | 0 | 0 | 0 | 0 | Gate scan position register<br>SCN4-0: scan start position of gate |
| R42h | 1 | 1 | 1 | 1 | 1 | 1 | 1 | 1 | 0 | 0 | 0 | 0 | 0 | 0 | 0 | 0 | 1st screen driving position<br>SE17-10: 1st screen end position setting<br>SS17-10: 1st screen start position setting |
| R43h | 1 | 1 | 1 | 1 | 1 | 1 | 1 | 1 | 0 | 0 | 0 | 0 | 0 | 0 | 0 | 0 | 2nd screen driving position<br>SE27-20: 2nd screen end position setting<br>SS27-20: 2nd screen start position setting |
| R44h | 0 | 1 | 1 | 1 | 1 | 1 | 1 | 1 | 0 | 0 | 0 | 0 | 0 | 0 | 0 | 0 | Horizontal window address<br>HEA7-0: Horizontal window address end position<br>HSA7-0: Horizontal window address start position |
| R45h | 1 | 0 | 0 | 1 | 1 | 1 | 1 | 1 | 0 | 0 | 0 | 0 | 0 | 0 | 0 | 0 | Vertical window address<br>HEA7-0: Vertical window address end position<br>HSA7-0: Vertical window address start position |

# 8. TFT-LCD Driver IC Control Algorithms

## 8.1. Power On/Off Sequence, when CPU I/F.

< Power On Sequence >

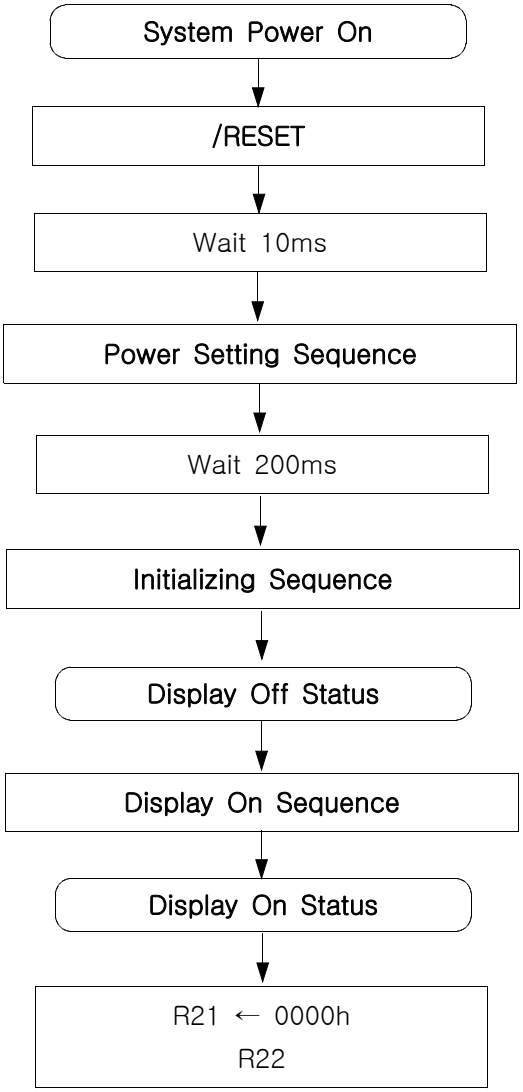


< Power Off Sequence >

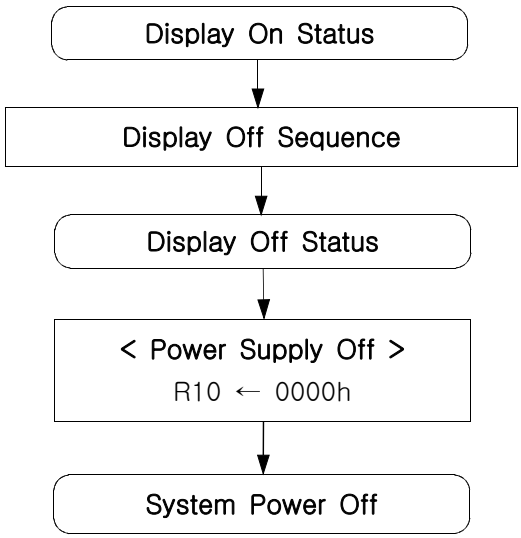

## 8.2. Initializing & Power Setting Sequence

< Initializing Sequence >

R01 ← 090ch
R02 ← 0200h
R03 ← 1030h
R07 ← 0005h
R08 ← 0503h
R0b ← 0004h
R0c ← 0004h
R30 ← 0507h
R31 ← 0207h
R32 ← 0000h
R33 ← 0202h
R34 ← 0707h
R35 ← 0005h
R36 ← 0002h
R37 ← 0202h
R38 ← 0a00h
R40 ← 0000h
R42 ← 9F00h
R43 ← 0000h
R44 ← 7F00h
R45 ← 9F00h

< Power Setting Sequence >

R11 ← 0014h
R12 ← 0001h
R13 ← 0818h
R14 ← 0013h

↓

R10 ← 1a10h

↓

Wait 50ms

↓

R13 ← 083dh

* Remark : VCI = 2.8v

### 8.3. Display On/Off Sequence

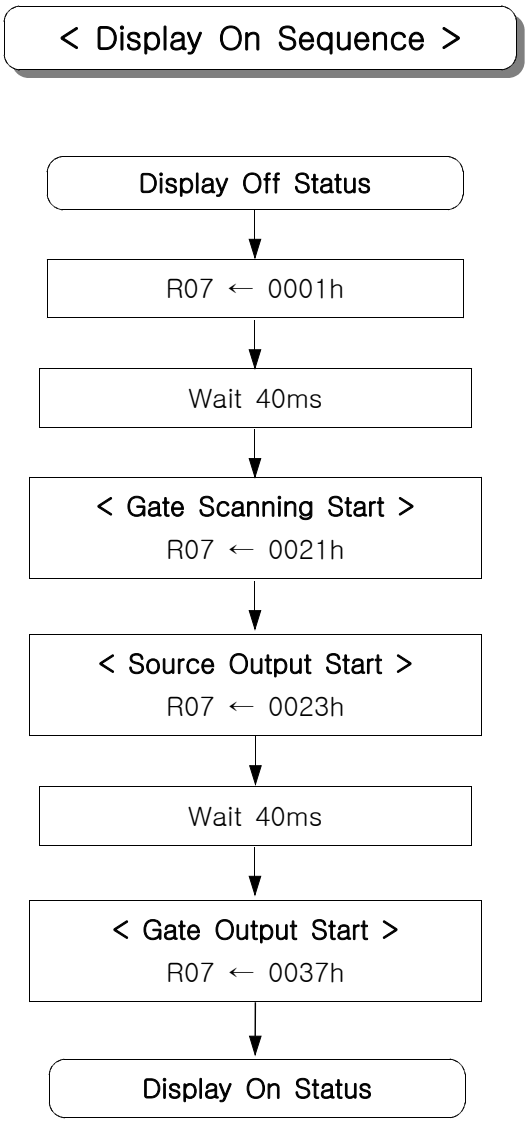


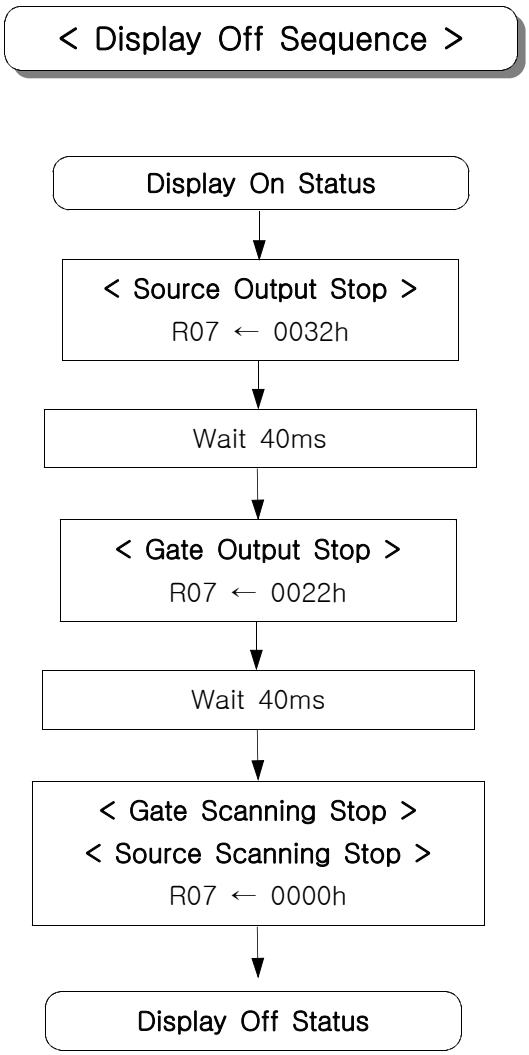

## 8.4. Sleep / Wake-up Sequence, When CPU I/F

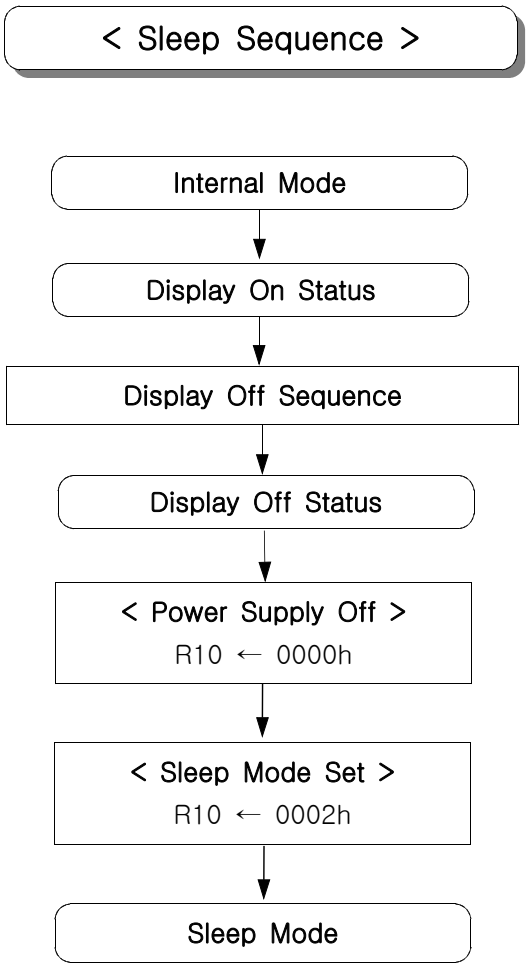


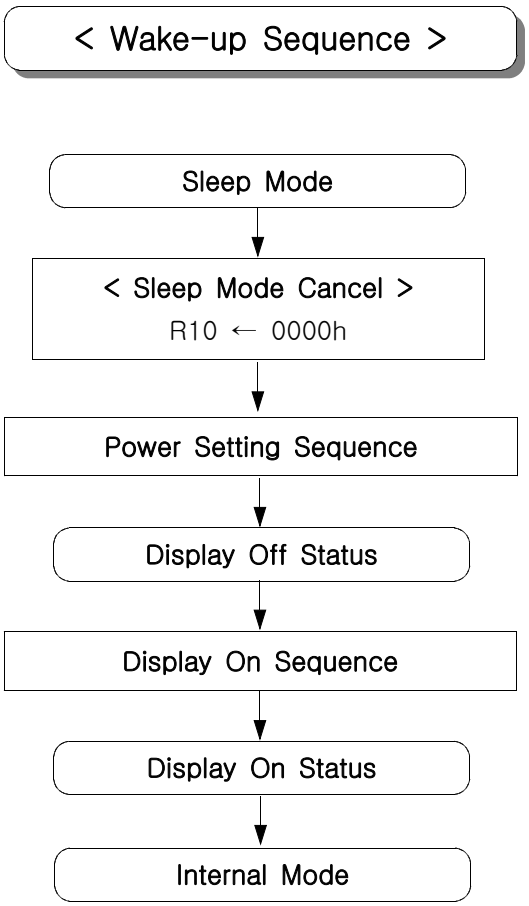

## 8.5. Stand-by / Wake-up Sequence, When CPU I/F

### < Stand-by Sequence >

Internal Mode
↓
Display On Status
↓
Display Off Sequence
↓
Display Off Status
↓
< Power Supply Off >
R10 ← 0000h
↓
< Stand-by Mode Set >
R10 ← 0001h
↓
Stand-by Mode

### < Wake-up Sequence >

Stand-by Mode
↓
< Oscillation Start >
R00 ← 0001h
↓
Wait 10ms
↓
< Stand-by Mode Cancel >
R10 ← 0000h
< Oscillation Start >
R00 ← 0001h
↓
Wait 10ms
↓
< Stand-by Mode Cancel >
R10 ← 0000h
↓
Power Setting Sequence
↓
Initializing Sequence
↓
Internal Mode
↓
Display Off Status
↓
Display On Sequence
↓
Display On Status
↓
R21 ← 0000h
R22

## 8.6. 8color-Partial Mode Changing Sequence, When CPU I/F

**< 65K → 8 color >**

step image(RGB data)
R07h ← 0004h
Wait 30 ms
R11h ← 0000h
R12h ← 0006h
R14h ← 0014h
R10h ← 0f04h
R07h ← 000dh
Wait 30 ms
R07h ← 002dh
R07h ← 002fh
Wait 30 ms
R02h ← 0000h
R08h ← 0000h
R0bh ← 000fh
R38h ← 0000h
R42h ← xxxxh
R43h ← xxxxh
Note1
R44h ← xxxxh
R45h ← xxxxh
Note2
R07h ← 193fh
step image(RGB data)

**< 8 color → 65K>**

step image(RGB data)
R07h ← 000ch
Wait 30 ms
R11h ← 0d1dh
R12h ← 0001h
R14h ← 2913h
R10h ← 1a10h
R07h ← 0005h
Wait 30 ms
R07h ← 0025h
R07h ← 0027h
Wait 30 ms
R01h ← 090Ch
R02h ← 0200h
R0bh ← 0002h
R38h ← 0600h
R42h ← 9f00h
R43h ← 0000h
R44h ← 7f00h
R45h ← 9f00h
R07h ← 0037h
step image(RGB data)

Note 1.
R42 and R43 decide 1 st, 2 nd screens' line
Detailed contents are 67 pages reference of uPD161963 data sheet
Note 2.
R44 and R45 are changed unusually to R42 and R43 setting

Preliminary

# 9. Part List of Components

## 9.1 Panel, Driver IC

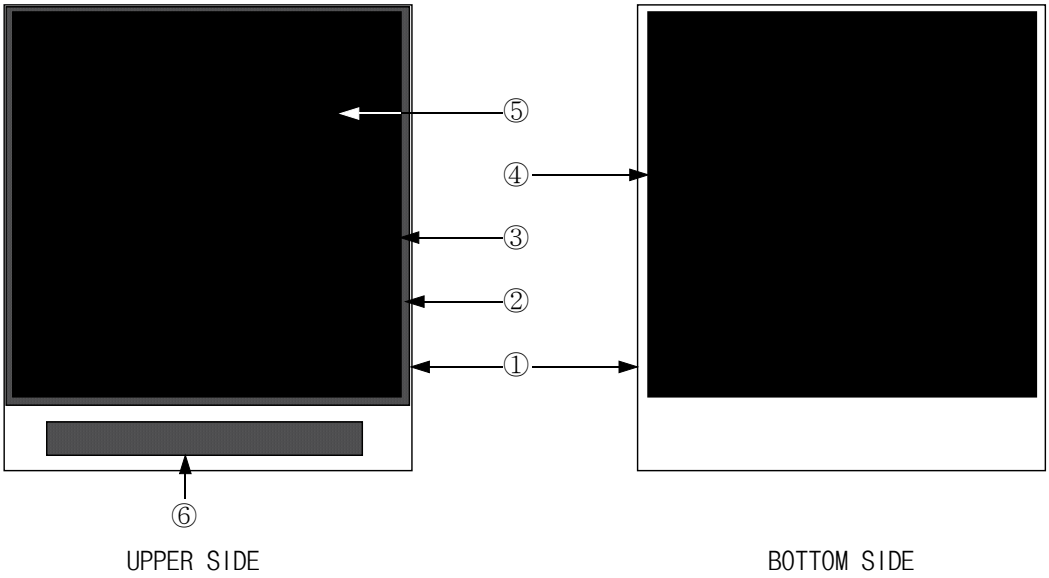


| No | Name | SPEC | MAKER | Amount | Remark | Note |
|---|---|---|---|---|---|---|
| 1 | TFT GLASS | T0.5 | SEC | 1 | ① | |
| 2 | COLOR FILTER GLASS | T0.5 | SEC | 1 | ② | (1) |
| 3 | UPPER POLARIZER | TEG1465DU-HC | KORENO | 1 | ③ | |
| 4 | LOWER POLARIZER | APCFH1-D2 TEG | KORENO | 1 | ④ | |
| 5 | LIQUID CRYSTAL | MLC-8033 | MERCK | 1 | ⑤ | |
| 6 | 1Chip DRIVER IC | uPD161963 | NEC | 1 | ⑥ | |

Note (1) color resist

| No. | Name | Part No. | MAKER |
|---|---|---|---|
| 1 | RED | CR-UC0200R | Cheil Industries |
| 2 | GREEN | CR-UC0104G | Cheil Industries |
| 3 | BLUE | CR-UC0200B | Cheil Industries |

## 9.2 FPC & Power Component

| No. | Part Name | Specification | Maker | EA | Silk | Note |
|---|---|---|---|---|---|---|
| 1 | LED | NESW008BT | NICHIA | 2 | LED1, LED2 | |
| 2 | DIODE SCHOTTKY | HSL226 (30V,50MA,EFP,TP) | Hitachi | 1 | D1 | |
| 3 | CHIP RESISTER | 68Kohm,1%,1/16W,DA,TP,1005 | - | 1 | ROSC | (1) |
| 4 | Array CHIP CAPACIOTR | AVD11X5R105M16AT (1000NF,20%,16V,X5R,TP,1410) | KYOCERA | 6 | CA23/11, CA_21/22, DD/VDD, VCOML/VC11, VREG/VCOMH, VCL/VDD2 | |
| 5 | CHIP CAPACIOTR | 1000NF,10%,25V,X5R,TP,1608 | - | 2 | CVGH, CVGL | (1) |
| 6 | CONNECTOR | AXK7L20227 (20p, 2R, 0.4mm, SMD-S) | MATSUSHITA | 1 | J2 | |

**Note (1) Any Vender**

Preliminary

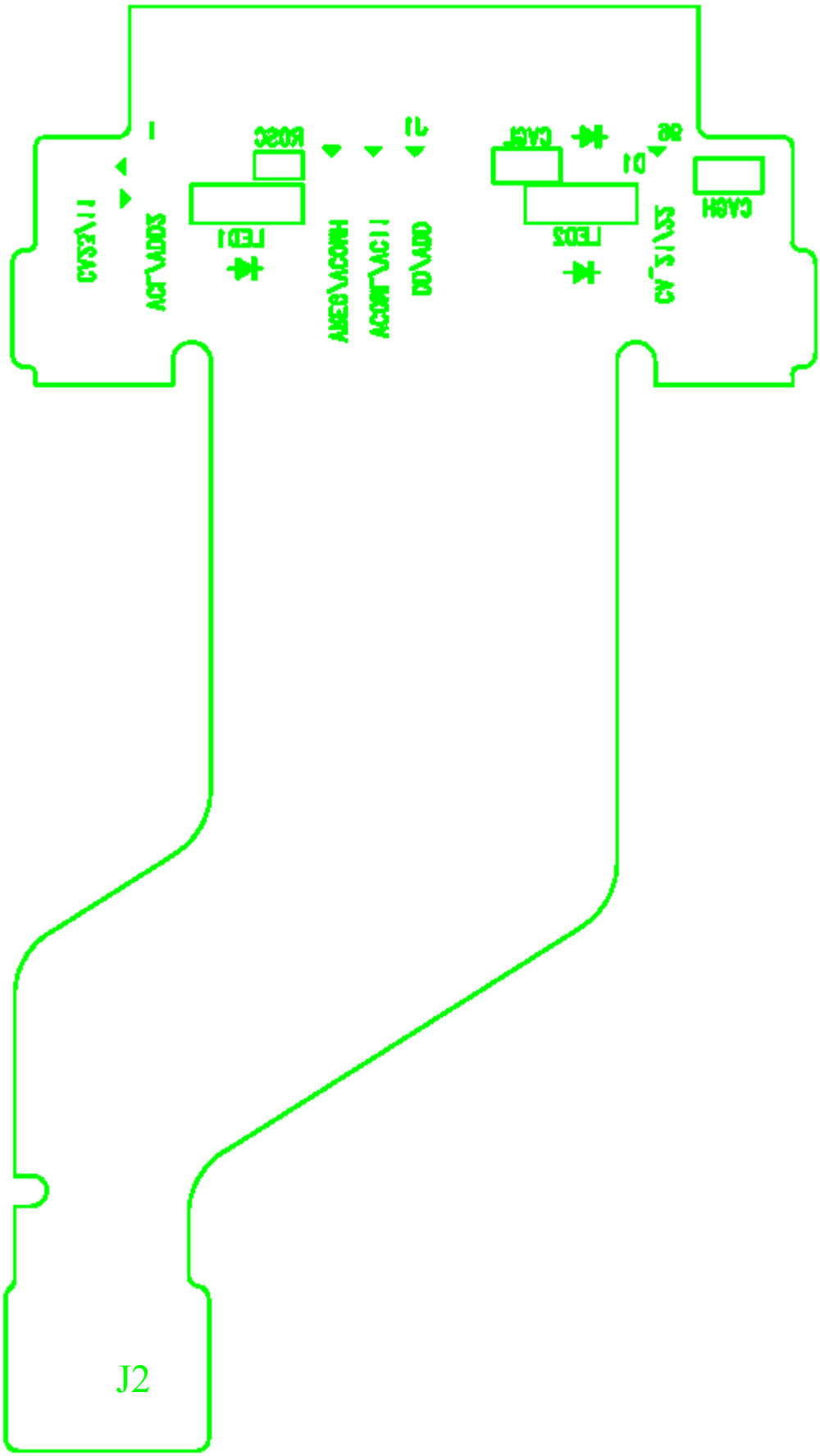

### 9.3 Back-Light Unit Structure

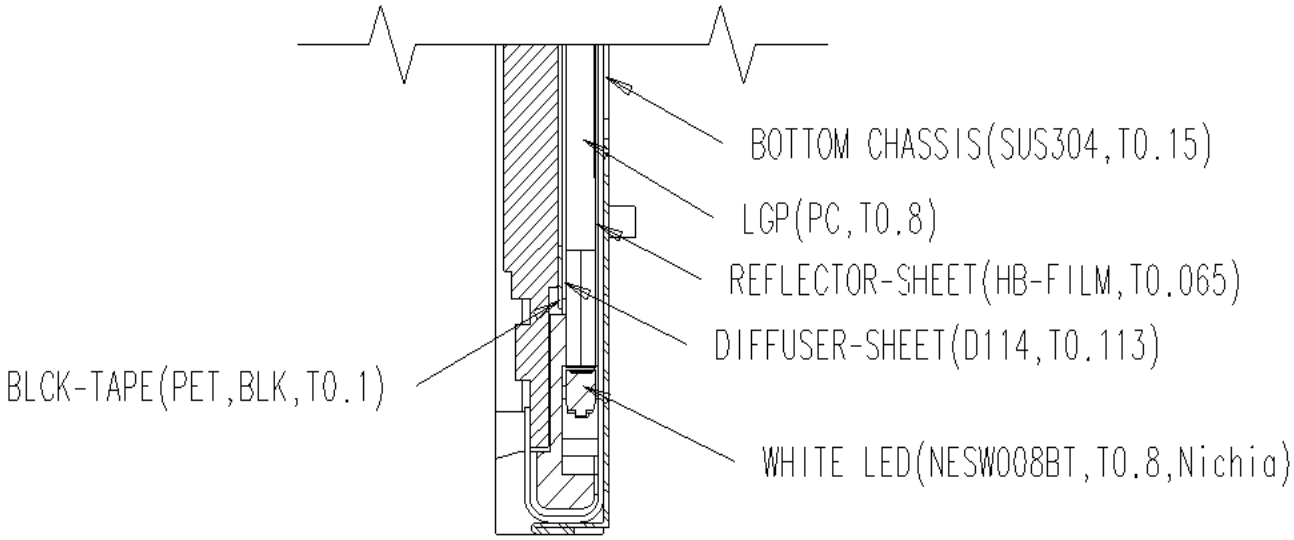

Preliminary

# 10. Reliability Test

## 10.1 Condition

| ITEM | CONDITION | Result | REMARK |
|---|---|---|---|
| High Temperature Operating Life-test | 60℃, 160HR | Pass | |
| Low Temperature Operating Life-test | -20℃, 160HR | Pass | |
| Temperature Humidity Bias test | 60℃ 90%RH, 160HR | Pass | |
| Temperature Cycle ON/OFF test | -30℃ ⇔ 70℃ ON/OFF, 5CY | Pass | Note(1) |
| High Temperature Storage test | 85℃, 160HR | Pass | |
| Low Temperature Storage test | -40℃, 160HR | Pass | |
| Thermal Shock test | -40℃ ⇔ 85℃, 30CY | Pass | Note(2) |
| Electro-Static Discharge test | CONTACT: ±4 kV, 20times<br>A I R: ±8 kV, 20times | Pass | Note(3) |
| Box Vibration test | RANDOM 0.74Grms, 1HR/Y axis (SMALL BOX) | Pass | Note(4) |
| Box Drop test | 1 Corner 3 Edges 6 faces, 66cm (MEDIUM BOX) | Pass | |

Note(1) ON Time over 10 seconds, OFF Time under 10 seconds

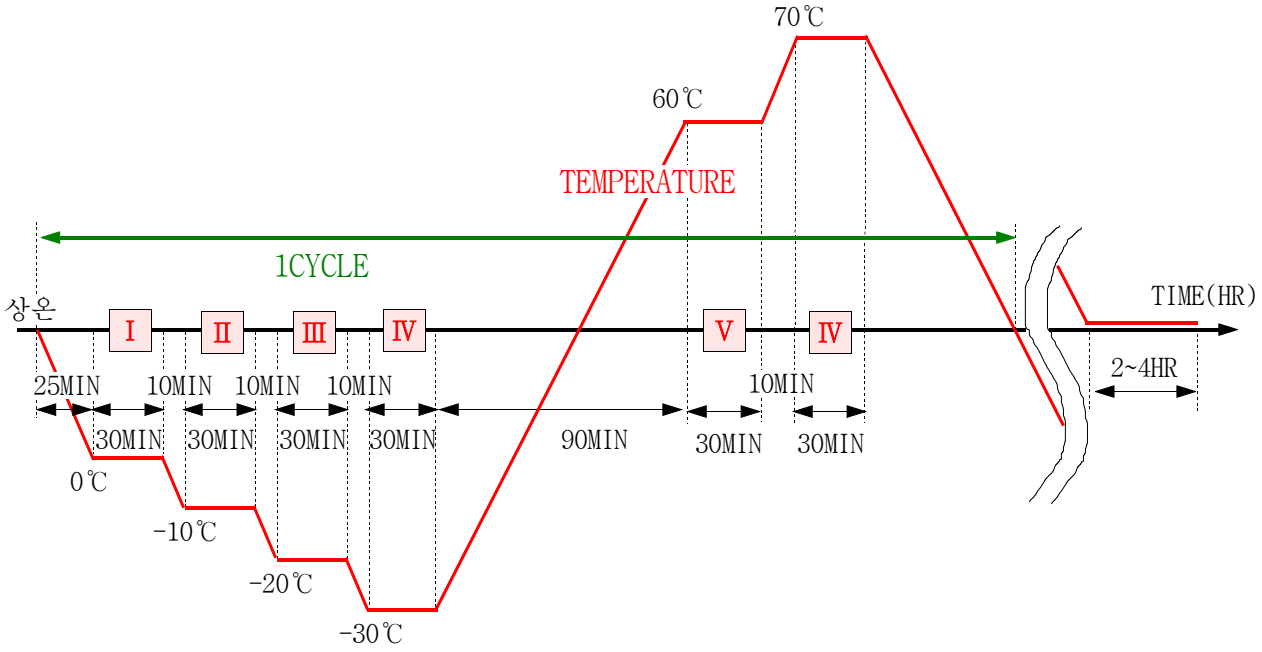


Temperature Cycle Transit Condition

Note(2) STORAGE

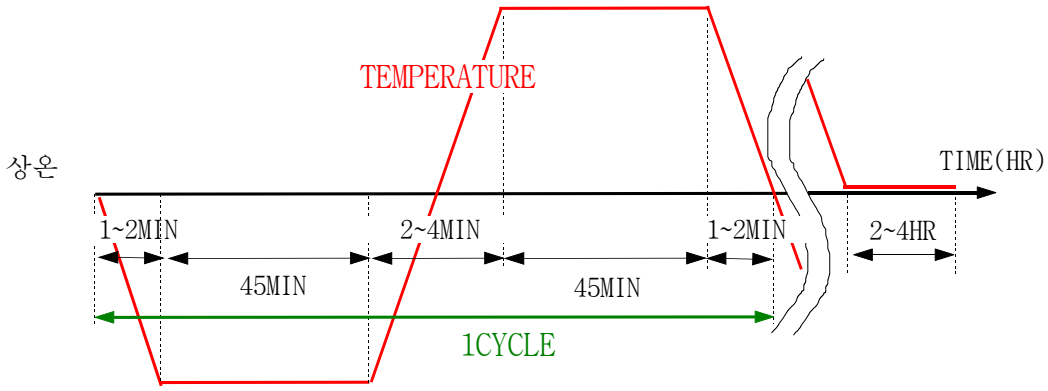


Thermal Shock Transit Condition

Note(3) Main-LCD, 5 times to every 4 corners of active area

Note(4) Basic transportation by common carrier environmental, 514.4 MIL-STD-810E

| OVERALL RMS LEVEL | BREAK POINT | | | | | |
|---|---|---|---|---|---|---|
| | FRQUENCY | PSD VALUE | FRQUENCY | PSD VALUE | FRQUENCY | PSD VALUE |
| 0.74G | 10Hz | 0.00650 | 121Hz | 0.00300 | 340Hz | 0.00003 |
| | 20Hz | 0.00650 | 200Hz | 0.00300 | 500Hz | 0.00015 |
| | 120Hz | 0.00020 | 240Hz | 0.00150 | - | - |

10.2 Judgement

> Main LCD should work under the normal condition.

> After the temperature and humidity test, the luminance and CR(Contrast Ratio) should not be changed over 50% compared with those before the test.

## 11. Outline Dimension

*** See the next page.**

| NO | PART NAME | CODE NO | SPECIFICATION | Q'TY | SPEC NO | REMARK |
|---|---|---|---|---|---|---|
| | Outline Dimension | | LTS166QQ-F04 | | | |

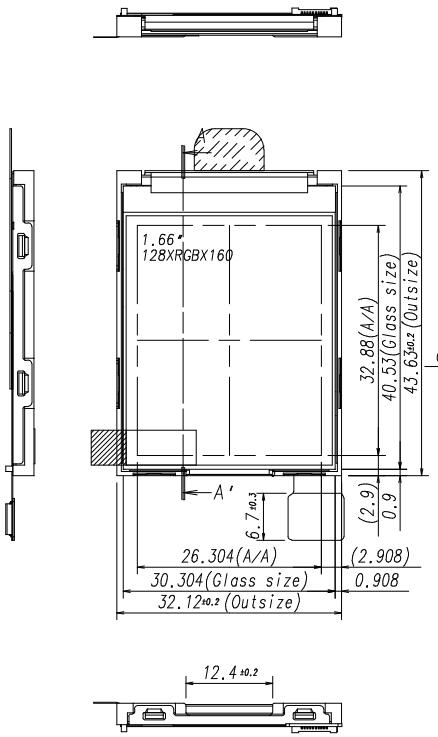


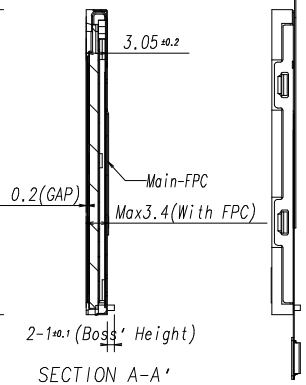


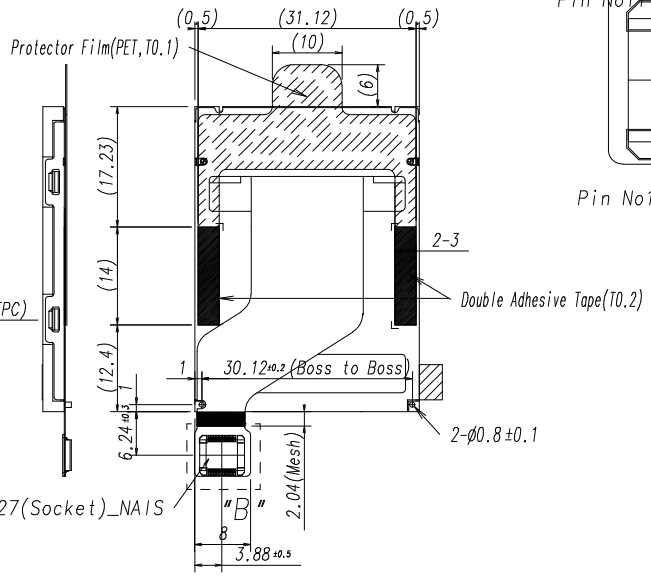


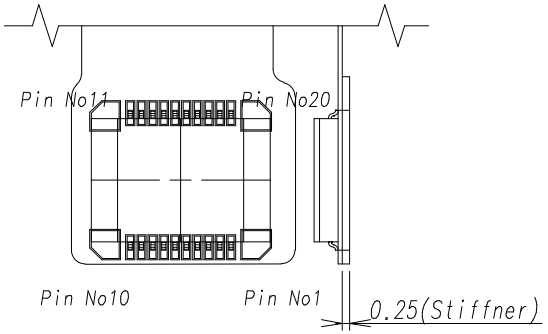


DETAIL "B"(S=4/1)

PIN DESCRIPTION

| NO. | SYMBOL |
|---|---|
| 1 | VCC |
| 2 | IM1 |
| 3 | DB15 |
| 4 | DB14 |
| 5 | DB13 |
| 6 | DB12 |
| 7 | RW |
| 8 | RS |
| 9 | CS |
| 10 | Vss |
| 11 | Vss |
| 12 | E |
| 13 | RESET |
| 14 | DB11 |
| 15 | DB10 |
| 16 | DB9 |
| 17 | DB8 |
| 18 | Cathode |
| 19 | Anode |
| 20 | VCI |

GENERAL TOLERANCE

| STEP | LEVEL 1 | LEVEL 2 | LEVEL 3 |
|---|---|---|---|
| 0 < X ≦ 4 | ±0.05 | ±0.1 | ±0.2 |
| 4 < X ≦ 16 | ±0.08 | ±0.15 | ±0.3 |
| 16 < X ≦ 64 | ±0.12 | ±0.25 | ±0.5 |
| 64 < X ≦ 256 | ±0.25 | ±0.4 | ±0.8 |

| REV | DATE | | | | |
|---|---|---|---|---|---|
| UNIT | mm | DRA'N BY | DES'D BY | CHK'D BY | APP'D BY |
| SCALE | 1/1 | K.Y.LEE | | I.S.LEE | Y.B.CHU |
| TOLERANCE LEVEL3 | | '05.09.15 | | '05.09.15 | '05.09.15 |
| SAMSUNG ELECTRONICS | | | | | SPEC. NO |

| | | | |
|---|---|---|---|
| MODEL NAME | LTS166QQ-F04 | | |
| PART/SHEET NAME | Outline Dimension | SHEET | 1/1 |
| CODE NO. | | VER. | 00 |

## 12. Packing

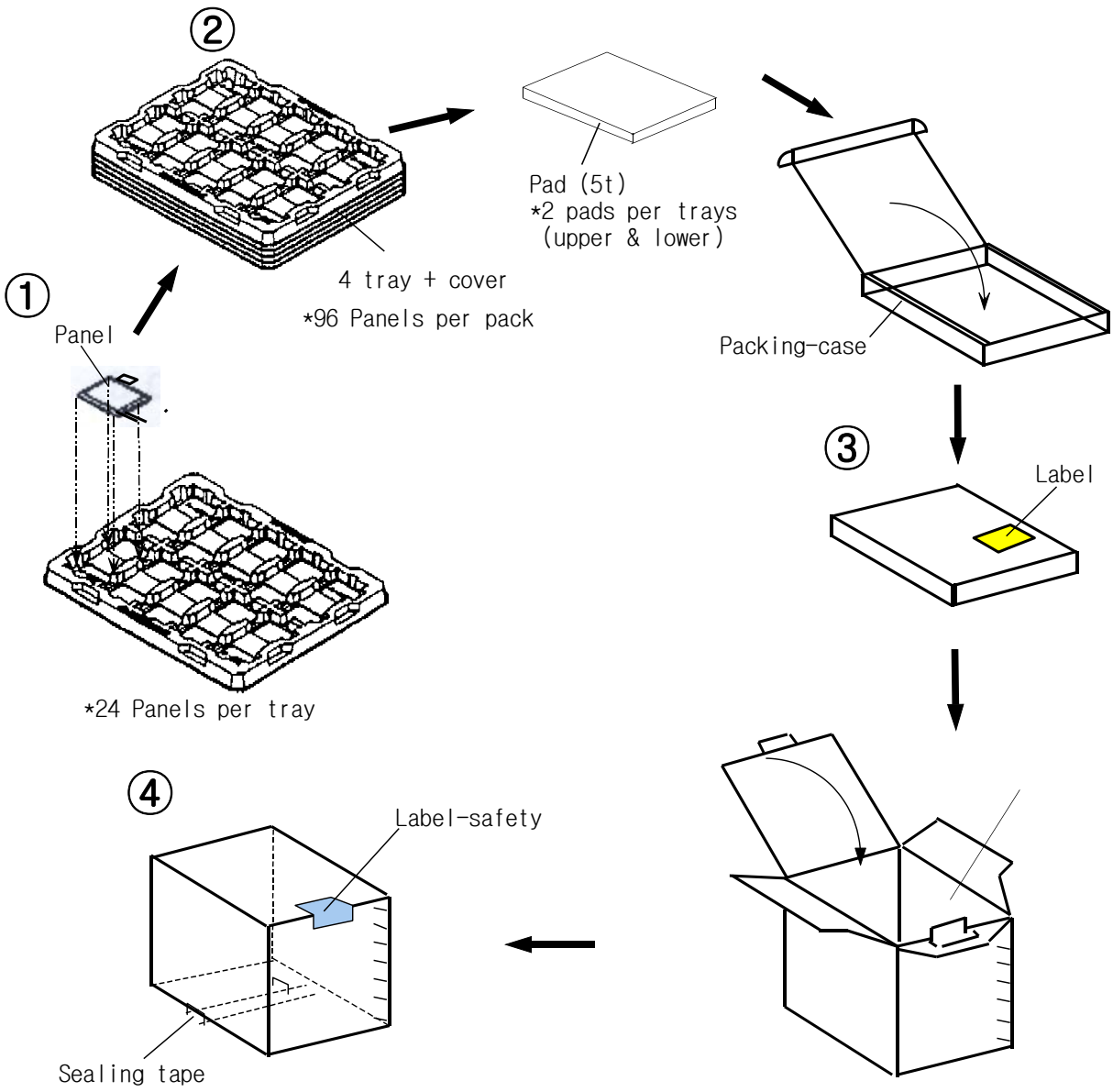


Note (1) Total : Case: Approx. 2.0 Kg
Box: Approx. 10.0 Kg

(2) Size : Case: 490(W) x 342(D) x 58(H)
Box: 505(W) x 355(D) x 319(H)

(3) Resistance of tray surface : $10^3$~$10^6$ Ω

(4) ESD of tray surface : 20~100V

(5) Place the panels in the tray facing the direction shown in the figure.

(6) Place 4 tray and cover(empty tray) and pads inside the packing-case.

(7) Place 5 packing-case inside the packing-box.(Affix the label)

(8) Seal the packing-box. Affix the label-safety.

# 13. Marking & Others

## 13.1 Laser Printing on the back side of TFT-LCD Module

- 9 digits marking on the back side of TFT-LCD modeule

| K | A | 05 | 01 | 20 | 0 |
|---|---|---|---|---|---|
| ① | ② | ③ | ④ | ⑤ | ⑥ |

① Module Site

→ K (SEC), V (Voda), I (IDS), D (DTC), G (Digix), M (Samkyoung)
Y (Yoowon), T (Intelligent), E (E-Litecom)

② Production Shift

③ Year : 05(2005), 06(2006)

④ Month : 01(January), 02(February), 03(March)

⑤ Day

⑥ Samsung internal control code

### 13.2 Packing case & box attach

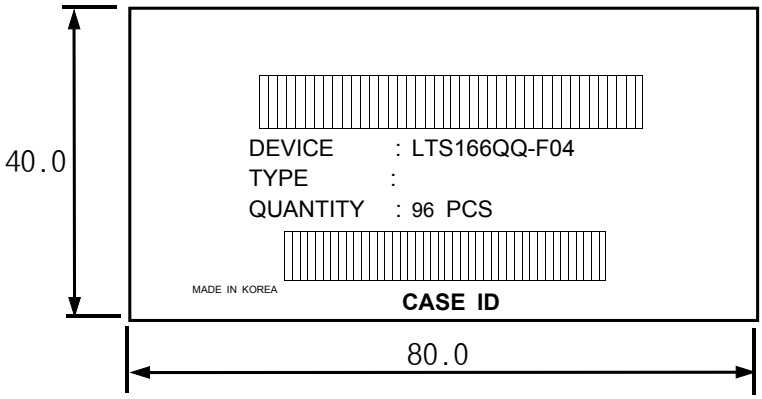


| Device | L | T | S | 1 | 6 | 6 | Q | Q | - | F | 0 | 4 |
|---|---|---|---|---|---|---|---|---|---|---|---|---|
| | ⓐ | ⓑ | ⓒ | ⓓ | | | ⓔ | | | ⓕ | ⓖ | |

ⓐ L : LCD ⓑ T : TFT ⓒ Application: S(Single HHP) ⓓ Panel Size
ⓔ Resolution : QQ(QQ VGA) ⓕ LC+Process Classification ⓖ Derivative Mode

| Type | 0 | 0 | R |
|---|---|---|---|
| | ⓗ | ⓘ | |

ⓗ Customer Classification ⓘ Module Manufacturing Site Classification

| Case ID | N | A | 5 | 0 | 5 | 0 | 0 | 2 | 7 | 8 |
|---|---|---|---|---|---|---|---|---|---|---|
| | ⓙ | ⓚ | ⓛ | ⓜ | | ⓝ | | | | |

ⓙ Box Number System ⓚ Site Classification
ⓛ Year ⓜ Week Code ⓝ Serial Number

# 14. General Precautions

## 14.1 Handling

(a) When the module is assembled, it should be attached to the system firmly. Be careful not to twist and bend the module.

(b) Refrain from strong mechanical shock and / or any force to the module. In addition to damage, this may cause improper operation or damage to the module and back-light unit.

(c) Note that polarizers are very fragile and could be easily damaged. Do not press or scratch the surface harder than a HB pencil lead.

(d) Wipe off water droplets or oil immediately. If you leave the droplets for a long time, Staining and discoloration may occur.

(e) If the surface of the polarizer is dirty, clean it using some absorbent cotton or soft cloth.

(f) The desirable cleaners are water, IPA(Isopropyl Alcohol) or Hexane. Do not use Kaptone type materials(ex. Acetone), Ethyl alcohol, Toluene, Ethyl acid or Methyl chloride. It might permanent damage to the polarizer due to chemical reaction.

(g) If the liquid crystal material leaks from the panel, it should be kept away from the eyes or mouth . In case of contact with hands, legs or clothes, it must be washed away thoroughly with soap.

(h) Protect the module from static , it may cause damage to the CMOS Gate Array IC.

(i) Use finger-stalls with soft gloves in order to keep display clean during the incoming inspection and assembly process.

(j) Do not disassemble the module.

(k) Protection film for polarizer on the module shall be slowly peeled off just before use so that the electrostatic charge can be minimized.

(l) Pins of I/F connector shall not be touched directly with bare hands.

### 14.2 Storage

(a) Do not leave the panel in high temperature, and high humidity for a long time. It is highly recommended to store the module with temperature from 0 to 35°C and relative humidity of less than 70%.

(b) Do not store the TFT-LCD module in direct sunlight.

(c) The module shall be stored in a dark place. It is prohibited to apply sunlight or fluorescent light during the store.

### 14.3 Operation

(a) Do not connect, disconnect the module in the "Power On" condition.

(b) Power supply should always be turned on/off by the chapter 8 "Power On/Off sequence"

### 14.4 Others

(a) The Liquid crystal is deteriorated by ultraviolet, do not leave it in direct sunlight and strong ultraviolet ray for many hours.

(b) Avoid condensation of water. It may result in improper operation or disconnection of electrode.

(c) Do not exceed the absolute maximum rating value. ( the supply voltage variation, input voltage variation, variation in part contents and environmental temperature, and so on)
Otherwise the panel may be damaged.

(d) If the panel displays the same pattern continuously for a long period of time, it can be the situation when the image "Sticks" to the screen.

(e) This panel has its circuitry FPC on the bottom side and should be handled carefully in order not to be stressed.