PRODUCT SPECIFICATIONS

SHARP

Mobile Liquid Crystal Displays Group

LQ035Q7DH01

TFT-LCD Module

Spec. Issue Date: Oct. 21, 2003

No: LCP-03015A

PREPARED BY : DATE A.Ogino Oct.21.2003	S H A R P	SPEC No. LCP-03015A
		FILE No.
		ISSUE : Oct. 21. 2003
APPROVED BY : DATE		PAGE : 24 pages
	MOBILE LIQUID CRYSTAL DISPLAY GROUP SHARP CORPORATION	Design Center MOBILE LCD Enterprise Development Center
	SPECIFICATION	

DEVICE SPECIFICATION FOR

TFT-LCD module

MODEL No. LQ035Q7DH01

☐ CUSTOMER'S APPROVAL

DATA

BY

PRESENTED

BY 中辻晴雄

H. NAKATSUJI

DEPARTMENT GENERAL MANAGER
Development Department V
Design Center I
MOBILE LCD Enterprise development Center
MOBILE LCD GROUP
SHARP CORPORATION

RECORDS OF REVISION

MODEL No：LQ035Q7DH01

SPEC No ：LCP−03015

	NO.	PAGE	SUMMARY	NOTE
2003.06 .13	LCP−03015	-	-	1 st Issue
2003.10 .21	LCP−03015A	5	Touch panel driving section	Correction
		8	Setup time of Vcom : Min Value	Correction
		21	Outline Dimensions	Change

SHARP

NOTICE

This publication is the proprietary of SHARP and is copyrighted, with all rights reserved. Under the copyright laws, no part of this publication may be reproduced or transmitted in any form or by any means, electronic or mechanical for any purpose, in whole or in part, without the express written permission of SHARP. Express written permission is also required before any use of this publication may be made by a third party.

The application circuit examples in this publication are provided to explain the representative applications of SHARP's devices and are not intended to guarantee any circuit design or permit any industrial property right or other rights to be executed. SHARP takes no responsibility for any problems related to any industrial property right or a third party resulting from the use of SHARP's devices, except for those resulting directly from device manufacturing processes.

In the absence of confirmation by device specification sheets, SHARP takes no responsibility for any defects that occur in equipment using any of SHARP's devices, shown in catalogs, data books, etc. Contact SHARP in order to obtain the latest device specification sheets before using any SHARP's device.

SHARP reserves the right to make changes in the specifications, characteristics, data, materials, structures and other contents described herein at any time without notice in order to improve design or reliability. Contact SHARP in order to obtain the latest specification sheets before using any SHARP's device. Manufacturing locations are also subject to change without notice.

Observe the following points when using any device in this publication. SHARP takes no responsibility for damage caused by improper use of the devices.

The devices in this publication are designed for use in general electronic equipment designs, such as:

・Personal computers ・Office automation ・Telecommunication equipment
・Test and measurement equipment ・Industrial control
・Audio visual and multimedia equipment ・Consumer electronics

The appropriate design measures should be taken to ensure reliability and safety when SHARP's devices are used for equipment such as:

・Transportation control and safety equipment(i.e., aircraft, trains, automobiles, etc.)
・Traffic signals ・Gas leakage sensor breakers
・Alarm equipment ・Various safety devices etc.

SHARP's devices shall not be used for equipment that requires extremely high level of reliability, such as:

・Military and space applications ・Nuclear power control equipment
・Medical equipment for life support

Contact a SHARP representative, in advance, when intending to use SHARP's devices for any "specific" applications other than those recommended by SHARP.

Contact and consult with a SHARP representative if there are any questions about the contents of this publication.

(1) Application

This specification applies to LQ035Q7DH01

(2) Overview

This module is a color active matrix LCD module incorporating amorphous silicon TFT (Thin Film Transistor), named AD-TFT(Advanced TFT). It is practicable in both transmissive-type and reflection-type modes. It is composed of a color TFT-LCD panel, driver ICs, an FPC, a back light, a touch panel and a back sealed casing. It isn't composed control circuit. Graphics and texts can be displayed on a 240×3×320 dots panel with 262,144 colors by supplying.

Optimum view angle is 6 o'clock. An inverted display mode is selective in the vertical or the horizontal direction.

(3) Mechanical specifications

Table 1

Parameter	Specifications	Units	Remarks
Screen size (Diagonal)	8.9 [3.52”] Diagonal	cm	
Display active area	53.64（H）×71.52（V）	mm	
Pixel format	240(H)×320(V) (1 pixel = R+G+B dots)	pixels	
Pixel pitch	0.2235（H）×0.2235（V）	mm	
Pixel configuration	R,G,B vertical stripe		
Unit outline dimension	65.0(W)×86.2(H)×4.0 (D)	mm	【Note3-1】
Mass	45	g	TYP.
Surface hardness	3H		

【Note 3-1】

Excluding protrusion. Including FPC cover portion

For detailed measurements and tolerances, please refer to Fig. 1.

(4)Pixel configuration

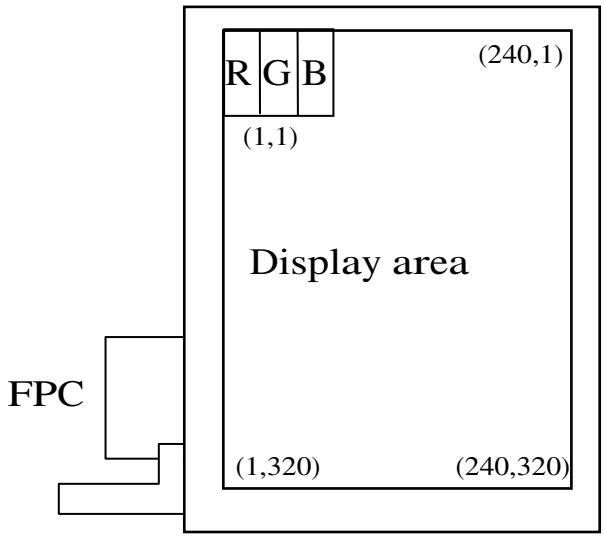

(5)Input/Output terminal

5-1)TFT-LCD panel driving section

Table2 Recommendation CN：FH12A-50S-0.5SH(HIROSE)

Pin No.	Symbol	I/O	Description	Remarks
1	VL1	I	Power supply for LED (High voltage)	
2	NC	－		
3	VL2	I	Power supply for LED (Low voltage)	
4	VEE	－	Power supply of gate driver(low level)	
5	VSHD	－	Power supply of digital	
6	DGND	－	Ground(digital)	
7	CLS	I	Clock signal of gate driver	
8	DGND	－	Ground(digital)	
9	SPS	I	Start signal of gate driver	
10	U/L	I	Selection for vertical scanning direction	【Note5-1】
11	MOD	I	Control signal of gate driver	【Note5-2】
12	VDD	－	Power supply of gate driver(high level)	
13	VCOM	I	Common electrode driving signal	
14	DGND	－	Ground(digital)	
15	SPR	I/O	Sampling start signal	
16	DGND	－	Ground(digital)	
17	VSHA	－	Power supply(analog)	
18	LBR	I	Selection for horizontal scanning direction	【Note5-3】
19	PS	I	Power save signal (Please don't carry out use by "Low" fixation)	
20	REV	I	reverse control signal	【Note5-4】
21	DGND	－	Ground(digital)	
22	B5	I	BLUE data signal(MSB)	
23	B4	I	BLUE data signal	
24	B3	I	BLUE data signal	
25	B2	I	BLUE data signal	
26	B1	I	BLUE data signal	
27	B0	I	BLUE data signal(LSB)	
28	LP	I	Data latch signal of source driver	
29	DGND	－	Ground(digital)	
30	SPL	I/O	Sampling start signal	
31	DGND	－	Ground(digital)	
32	DCLK	I	Data sampling clock signal	
33	DGND	－	Ground(digital)	
34	G5	I	GREEN data signal(MSB)	
35	G4	I	GREEN data signal	
36	G3	I	GREEN data signal	
37	G2	I	GREEN data signal	
38	G1	I	GREEN data signal	
39	G0	I	GREEN data signal(LSB)	

Pin No.	Symbol	I/O	Description	Remarks
40	DGND	－	Ground(digital)	
41	R5	I	RED data signal(MSB)	
42	R4	I	RED data signal	
43	R3	I	RED data signal	
44	R2	I	RED data signal	
45	R1	I	RED data signal	
46	R0	I	RED data signal(LSB)	
47	AGND	－	Ground(analog)	
48	COM	O	Produce REV signal with the amplitude of AGND－VSHA	【Note5-4】
49	DGND	－	Ground(digital)	
50	DGND	－	Ground(digital)	

【Note5-1】Selection for vertical scanning direction

U/L	Scanning direction (Pixel configuration)
Low	Normal scanning (X , 1) ↓ (X , 320)
High	Inverted scanning (X , 1) ↑ (X , 320)

【Note5-2】See section(7-1)-(A) ”※Cautions when you turn on or off the power supply”.

【Note5-3】Selection for horizontal scanning direction

LBR	SPL	SPR	Scanning direction (Pixel configuration)
High	Input	Output	Normal scanning (1,Y) → (240,Y)
Low	Output	Input	Inverted scanning (1,Y) ← (240,Y)

【Note5-4】

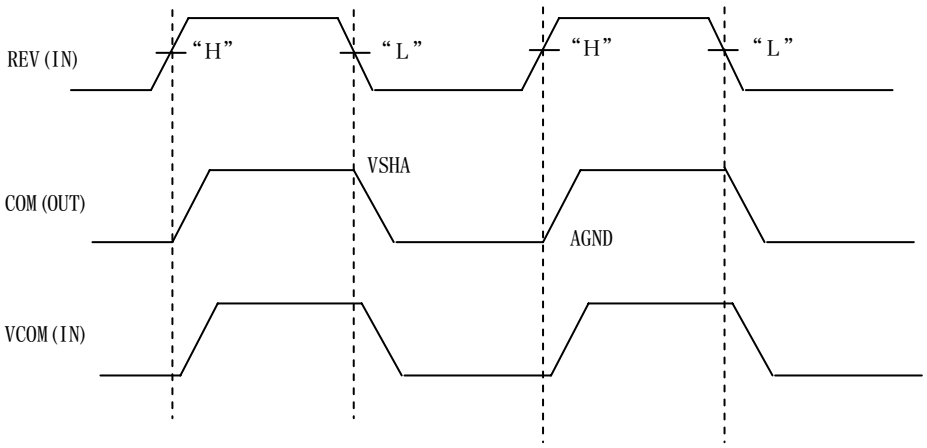

5-2)Touch panel driving section

Table 4 Recommendation CN：0.4(1.0)9FLH-RSM1-TB（JST） A

Pin No.	Symbol	I/O	Description	Remark
T1	YU	－	Y (12 o'clock side)	
T2	XL	－	X (right side)	A
T3	YD	－	Y (6 o'clock side)	
T4	XR	－	X (left side)	A

(6)Absolute Maximum Ratings

Table 5

Parameter	Symbol	Condition	Ratings	Unit	Remark
Power supply(source/Analog)	VSHA	Ta=25℃	-0.3～+7.0	V	
Power supply(source/Digital)	VSHD	Ta=25℃	-0.3～+7.0	V	
Power supply (gate)	VDD	Ta=25℃	-0.3～+35.0	V	
Power supply (gate)	VDD-VEE	Ta=25℃	-0.3～+35.0	V	
Input voltage (Digital)	VID	Ta=25℃	-0.3～VSHD+0.3	V	[Terminal①]
Operating temperature (panel surface)	T opp	－	-10～70	℃	【Note6】
Storage temperature	T stg	－	-25～70	℃	【Note6-2】

[Terminal①] MOD,U/L,SPS,CLS,SPL,R0～R5,G0～G5,B0～B5,LP,DCLK,LBR,SPR,PS,REV

【Note6-2】Humidity: 95%RH Max.(at Ta ≦ 40℃). Maximum wet-bulb temperature is less than 39℃ (at Ta > 40℃). Condensation of dew must be avoided.

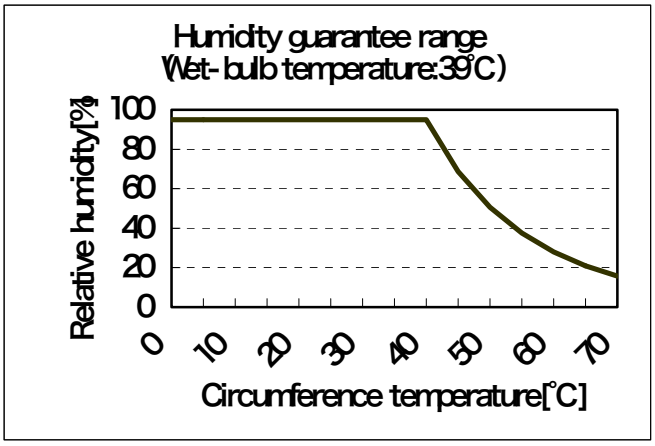

The maximum humidity in the temperature

(7)Electrical characteristics

7-1)Recommended operating conditions

A) TFT-LCD panel driving section

Table 6 GND=0V

Parameter		Symbol	Min.	Typ.	Max.	Unit	Remarks
Supply voltage for source driver (Analog)		VSHA	+4.5	+5.0	+5.5	V	
Supply voltage for source driver (Digital)		VSHD	+3.0	+3.3	+3.6	V	
Supply voltage for gate driver	High voltage	VDD	+14.5	+15.0	+15.5	V	
	Low voltage	VEE	-10.5	-10.0	-9.5	V	
Input voltage for Source driver (Low)		VILS	GND	-	0.2VSHD	V	【Note 7-1】
Input voltage for Source driver (High)		VIHS	0.8VSHD	-	VSHD	V	【Note 7-1】
Input current for Source driver (Low)		IILS	-	-	30	μA	【Note 7-1】
Input current for Source driver (High)		IIHS1	-	-	30	μA	【Note 7-2】
		IIHS2	-	-	1200	μA	【Note 7-3】
Input voltage for Gate driver (Low)		VILG	GND	-	0.2VSHD	V	【Note 7-4】
Input voltage for Gate driver (High)		VIHG	0.8VSHD	-	VSHD	V	【Note 7-4】
Input current for Gate driver (Low)		IILG	-	-	4	μA	【Note 7-4】
Input current for Gate driver (High)		IIHG	-	-	4	μA	【Note 7-4】
Common electrode driving signal	AC component	VCOMAC	-	±2.5	±2.6	Vp-p	【Note 7-5】
	DC component	VCOMDC	－0.8	+0.2	+1.2	V	【Note 7-5】

※Cautions when you turn on or off the power supply

① Turn on or off the power supply with simultaneously or the following sequence.

② The input signal of “MOD” Terminals(Pin No.11) must be low voltage when turning on the power supply, and it is held until more than double vertical periods after DATA is turned on completely. After then, it must be held high voltage until turning off the power supply.(Connect Pin No.11 terminals to the same signal.)

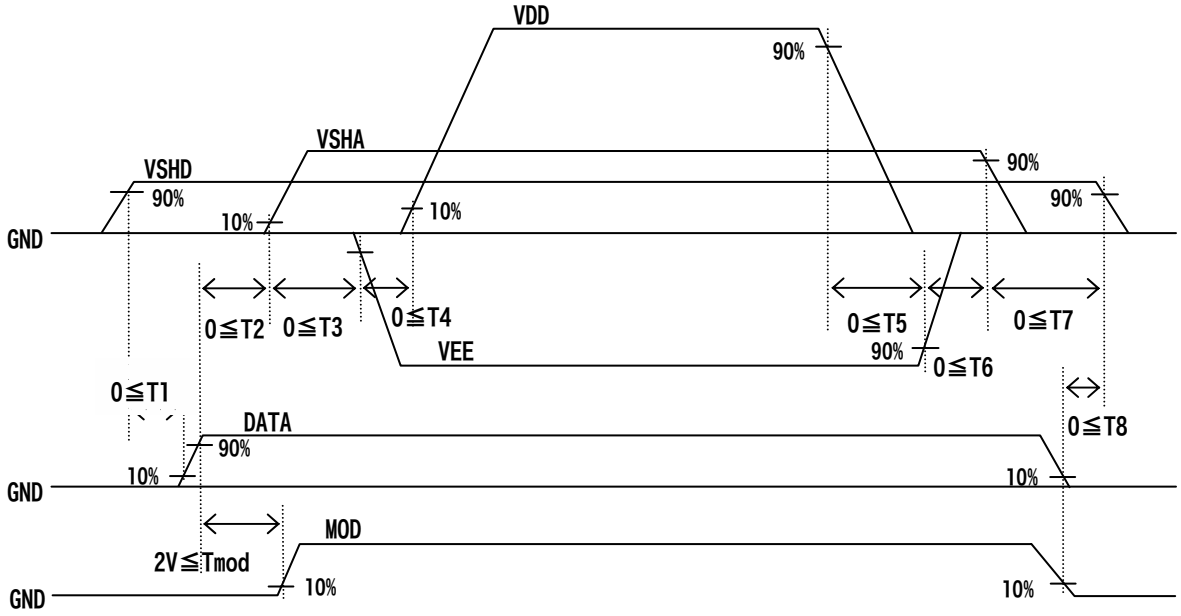

【Note 7-1】DCLK,SPL,SPR,LBR,LP,PS,REV,R0～R5,G0～G5 and B0～B5 terminals are applied.

【Note 7-2】DCLK,SPL,SPR,LBR,LP,REV,R0～R5,G0～G5 and B0～B5 terminals are applied.

【Note 7-3】PS terminal is applied.

【Note 7-4】MOD,CLS,SPS and U/L terminals are applied.

【Note 7-5】VCOMAC should be alternated on VCOMDC every 1 horizontal period and 1 vertical period. VCOMDC bias is adjusted so as to minimize flicker or maximum contrast every each module .

B) Back light driving section

Table 7 Ta=25℃

Parameter	Symbol	MIN	TYP	MAX	Units	Remarks terminal
LED voltage	V_L	－	21.6	25.2	V	
LED current	I_L	－	15	20	mA	
Power consumption	W_L	－	0.324	－	W	【Note 7-6】

【Note 7-6】Calculated reference value($I_L \times V_L$)

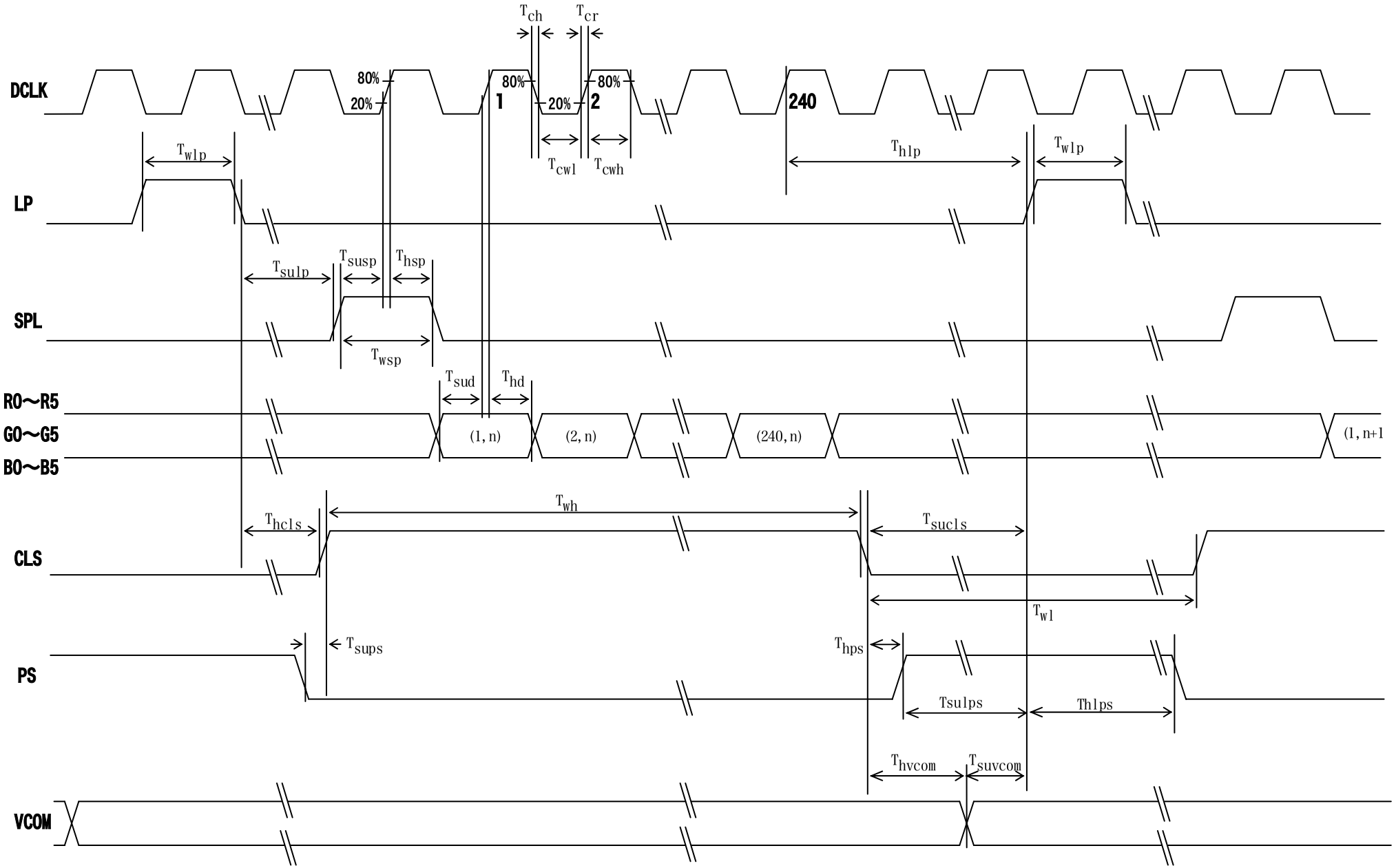

Fig.(a) Horizontal timing chart

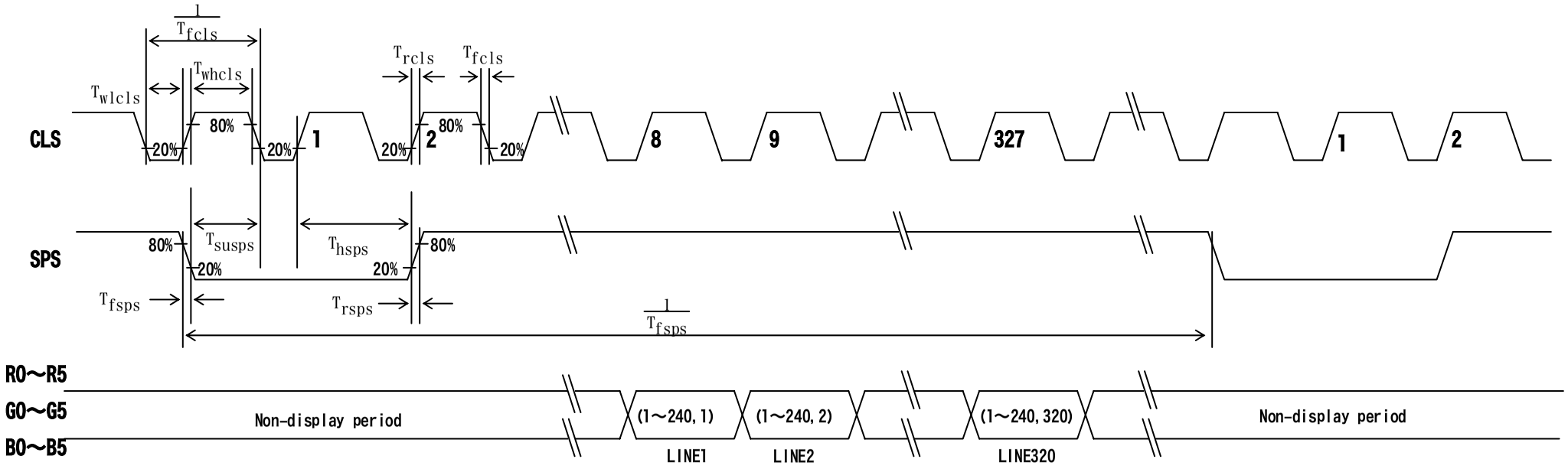

Fig.(b) Vertical timing chart

7-2) Timing Characteristics of input signals

Table 8　AC Characteristics (1)　(VSHA=+5V, VSHD=+3.3V, Ta=25℃)

Parameter		Symbol	Min.	Typ.	Max.	Unit	Remark
Clock frequency of source driver		fCK	4.5	－	6.8	MHz	DCLK
Source driver	Rising time of clock	Tcr	－	－	20	ns	
	Falling time of clock	Tcf	－	－	20	ns	
	Pulse width (High level)	Tcwh	40	－	－	ns	
	Pulse width (Low level)	Tcwl	40	－	－	ns	
	Frequency of start pulse	fsp	16.5	－	28	kHz	SPL,SPR 【Note 7-7】
	Setup time of start pulse	Tsusp	15	－	－	ns	
	Hold time of start pulse	Thsp	10	－	－	ns	
	Pulse width of start pulse	Twsp	－	－	1.5/fCK	ns	
	Setup time of latch pulse	Tsulp	20	－	－	ns	LP
	Hold time of latch pulse	Thlp	20	－	－	ns	
	Pulse width of latch pulse	Twlp	60	－	－	ns	
	Setup time of PS	Tsups	0	－	－	μs	PS
	Setup time of PS	Tsulps	1	－	－	μs	
	Hold time of PS	Thps	0	－	－	μs	
	Hold time of PS	Thlps	30	－	－	ns	
Set up time of data		Tsud	15	－	－	ns	R0～R5,G0～G5 ,B0～B5
Hold time of data		Thd	10	－	－	ns	
Gate driver	Clock frequency	fcls	16.5	－	28	kHz	CLS
	Pulse width of clock(Low)	Twlcls	5	－	(1/fcls)-30	μs	
	Pulse width of clock(High)	Twhcls	30	－	－	μs	
	Rising time of clock	Trcls	－	－	100	ns	
	Falling time of clock	Tfcls	－	－	100	ns	
	Setup time of clock	Tsucls	3	－	－	μs	
	Hold time of clock	Thcls	0	－	－	μs	
	Frequency of start pulse	fsps	58	－	86	Hz	SPS
	Setup time of start pulse	Tsusps	100	－	－	ns	
	Hold time of start pulse	Thsps	300	－	－	ns	
	Rising time of start pulse	Trsps	－	－	100	ns	
	Falling time of start pulse	Tfsps	－	－	100	ns	
Vcom	Setup time of Vcom	Tsuvcom	0	－	－	μs	Vcom
	Hold time of Vcom	Thvcom	1	－	－	μs	

A

【Note 7-7】There must be only one up-edge of DCLK (includes Tsusp and Thsp time) in the period of SPL="Hi".

7-3)Power consumption

Measurement condition : SPS=60Hz,CLS=15.73kHz,SPL=15.73kHz,DCLK=6.3MHz
The term of PS="Lo" in one horizontal period … 37μsec(234DCLK)
Ta=25℃

Table 9 when normal scan mode

Parameter		Sym	Conditions	MIN	TYP	MAX	Unit	Remarks
Source current	Analog	ISHA	VSHA=+5.0V	–	3.0	6.0	mA	【Note 7-8】
	Digital	ISHD	VSHD=+3.3V	–	1.5	3.0	mA	【Note 7-8】
Gate current	High	IDD	VDD=+15.0V	–	0.05	0.10	mA	【Note 7-9】
	Low	IEE	VEE=-10.0V	–	－0.05	－0.10	mA	【Note 7-9】

【Note 7-8】Vertical stripe pattern alternating 21 gray scale (GS21) with 42 gray scale (GS42) every 1 dot.

【Note 7-9】64-Gray-bar vertical pattern (GS0 ～ GS63 for horizontal way)

(8)Input Signals, Basic Display Color and Gray Scale of Each Color

Table 10

	Colors & Gray scale	Data signal																		
		Gray Scale	R0	R1	R2	R3	R4	R5	G0	G1	G2	G3	G4	G5	B0	B1	B2	B3	B4	B5
Basic color	Black	－	0	0	0	0	0	0	0	0	0	0	0	0	0	0	0	0	0	0
	Blue	－	0	0	0	0	0	0	0	0	0	0	0	0	1	1	1	1	1	1
	Green	－	0	0	0	0	0	0	1	1	1	1	1	1	0	0	0	0	0	0
	Cyan	－	0	0	0	0	0	0	1	1	1	1	1	1	1	1	1	1	1	1
	Red	－	1	1	1	1	1	1	0	0	0	0	0	0	0	0	0	0	0	0
	Magenta	－	1	1	1	1	1	1	0	0	0	0	0	0	1	1	1	1	1	1
	Yellow	－	1	1	1	1	1	1	1	1	1	1	1	1	0	0	0	0	0	0
	White	－	1	1	1	1	1	1	1	1	1	1	1	1	1	1	1	1	1	1
Gray Scale of red	Black	GS0	0	0	0	0	0	0	0	0	0	0	0	0	0	0	0	0	0	0
	⇧	GS1	1	0	0	0	0	0	0	0	0	0	0	0	0	0	0	0	0	0
	Darker	GS2	0	1	0	0	0	0	0	0	0	0	0	0	0	0	0	0	0	0
	⇧	↓				↓						↓						↓		
	⇩	↓				↓						↓						↓		
	Brighter	GS61	1	0	1	1	1	1	0	0	0	0	0	0	0	0	0	0	0	0
	⇩	GS62	0	1	1	1	1	1	0	0	0	0	0	0	0	0	0	0	0	0
	Red	GS63	1	1	1	1	1	1	0	0	0	0	0	0	0	0	0	0	0	0
Gray Scale of green	Black	GS0	0	0	0	0	0	0	0	0	0	0	0	0	0	0	0	0	0	0
	⇧	GS1	0	0	0	0	0	0	1	0	0	0	0	0	0	0	0	0	0	0
	Darker	GS2	0	0	0	0	0	0	0	1	0	0	0	0	0	0	0	0	0	0
	⇧	↓				↓						↓						↓		
	⇩	↓				↓						↓						↓		
	Brighter	GS61	0	0	0	0	0	0	1	0	1	1	1	1	0	0	0	0	0	0
	⇩	GS62	0	0	0	0	0	0	0	1	1	1	1	1	0	0	0	0	0	0
	Green	GS63	0	0	0	0	0	0	1	1	1	1	1	1	0	0	0	0	0	0
Gray Scale of bleu	Black	GS0	0	0	0	0	0	0	0	0	0	0	0	0	0	0	0	0	0	0
	⇧	GS1	0	0	0	0	0	0	0	0	0	0	0	0	1	0	0	0	0	0
	Darker	GS2	0	0	0	0	0	0	0	0	0	0	0	0	0	1	0	0	0	0
	⇧	↓				↓						↓						↓		
	⇩	↓				↓						↓						↓		
	Brighter	GS61	0	0	0	0	0	0	0	0	0	0	0	0	1	0	1	1	1	1
	⇩	GS62	0	0	0	0	0	0	0	0	0	0	0	0	0	1	1	1	1	1
	Bleu	GS63	0	0	0	0	0	0	0	0	0	0	0	0	1	1	1	1	1	1

0 :Low level voltage　　1 :High level voltage

Each basic color can be displayed in 64 gray scales from 6 bit data signals. According to the combination of total 18 bit data signals, the 262,144-color display can be achieved on the screen.

(9)Optical characteristics

9-1)Not driving the Back light condition

Table 11 (VSHA=+5V, VSHD=+3.3V, VDD=+15V, VEE=-10V ,Ta=25℃)

Parameter		Symbol	Condition	Min	Typ	Max	Unit	Remarks
Viewing angle range		θ21,22	CR≥2	35	50	-	degree	[Note 9-1,2]
		θ11		35	50	-	degree	
		θ12		35	50	-	degree	
Contrast ratio		CRmax	θ =0°	3	4	-		[Note 9-2,4]
Response time	Rise	τ r	θ =0°	-	30	60	ms	[Note 9-3]
	Fall	τ d		-	50	100	ms	
White chromaticity		x		0.27	0.32	0.37		[Note 9-4]
		y		0.30	0.35	0.40		
Reflection ratio		R	θ =0°	2.5	4	-	%	[Note 9-5]

* The measuring method of the optical characteristics is shown by the following figure.

* A measurement device is Otsuka luminance meter LCD5000.(With the diffusion reflection unit.)

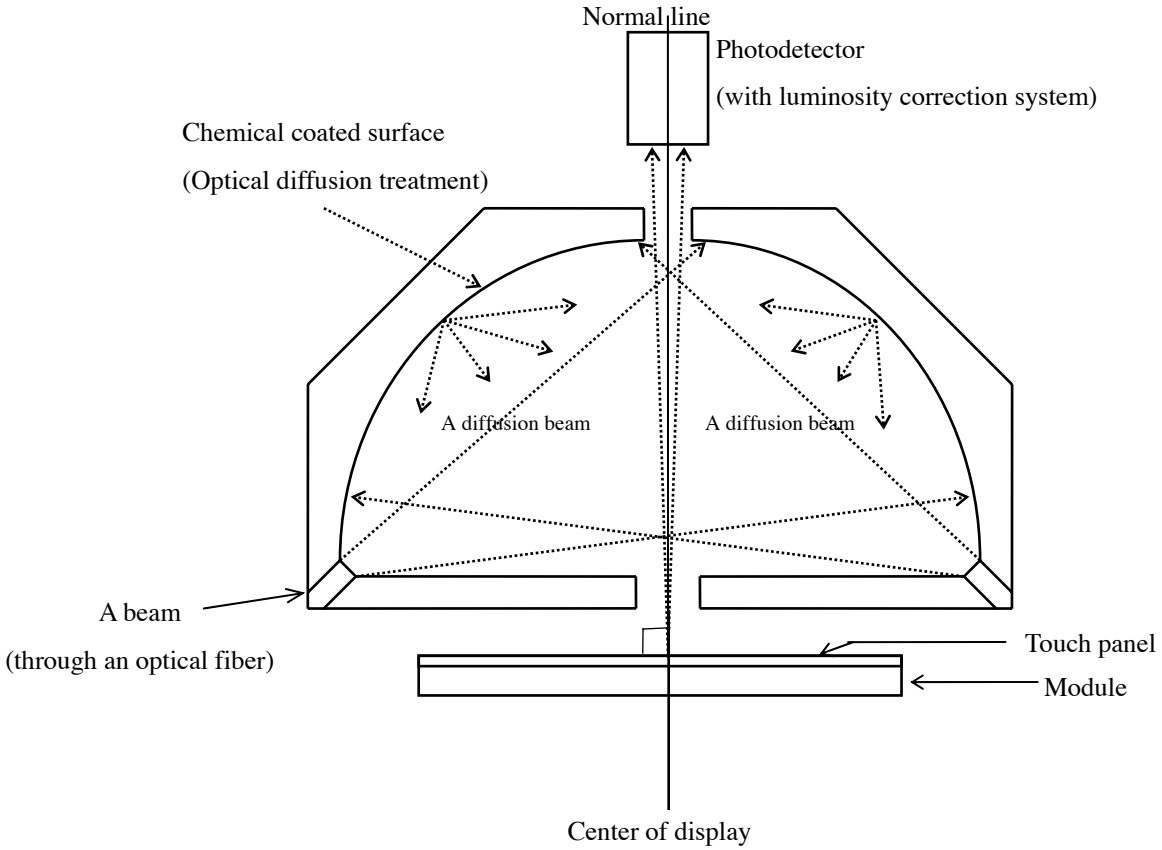

Measuring method (a) for optical characteristics

9-2)Driving the Back light condition

Table 12 (VSHA=+5V, VSHD=+3.3V, VDD=+15V, VEE=-10V ,Ta=25℃)

Parameter		Symbol	Condition	Min	Typ	Max	Unit	Remarks
Viewing angle range		θ21,22	CR≥2	30	40	-	degree	[Note 9-1,2,6]
		θ11		40	50	-	degree	
		θ12		30	40	-	degree	
Contrast ratio		Crmax	θ = 0°	40	70	-		[Note 9-2]
Response time	Rise	τ r		-	30	60	ms	[Note 9-3]
	Fall	τ d		-	50	100	ms	
White chromaticity		x		0.25	0.30	0.35		
		y		0.28	0.33	0.38		
Brightness		Y	θ = 0°	75	100	-	cd/m2	I_L=18mA
LED life time		LL	I_L=15mA	－	10000	－	hour	[Note 9-7]

* The measuring method of the optical characteristics is shown by the following figure.

* A measurement device is TOPCON luminance meter BM-5(A).(Viewing cone 1)

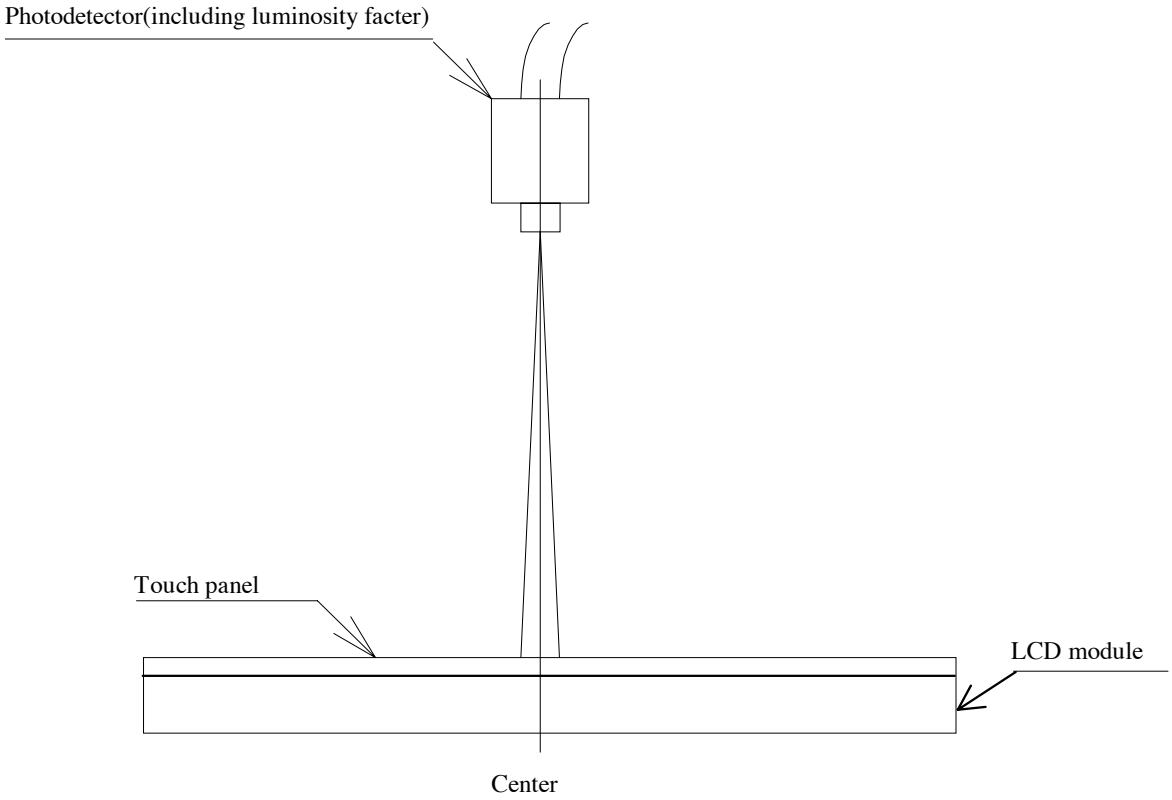

Measuring method (c) for optical characteristics

[Note 9-1] Viewing angle range is defined as follows.

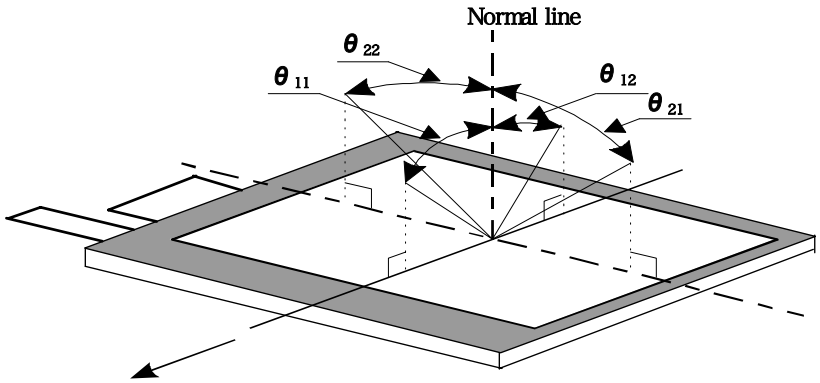

6 o' clock direction

Definition for viewing angle

[Note 9-2] Definition of contrast ratio:

The contrast ratio is defined as follows:

$$\text{Contrast ratio(CR)} = \frac{\text{Photodetecter output with all pixels white(GS63)}}{\text{Photodetecter output with all pixels black(GS0)}}$$

V_{COMAC}=5.0Vp-p

[Note 9-3] Definition of response time:

The response time is defined as the following figure and shall be measured by switching the input signal for "black" and "white".

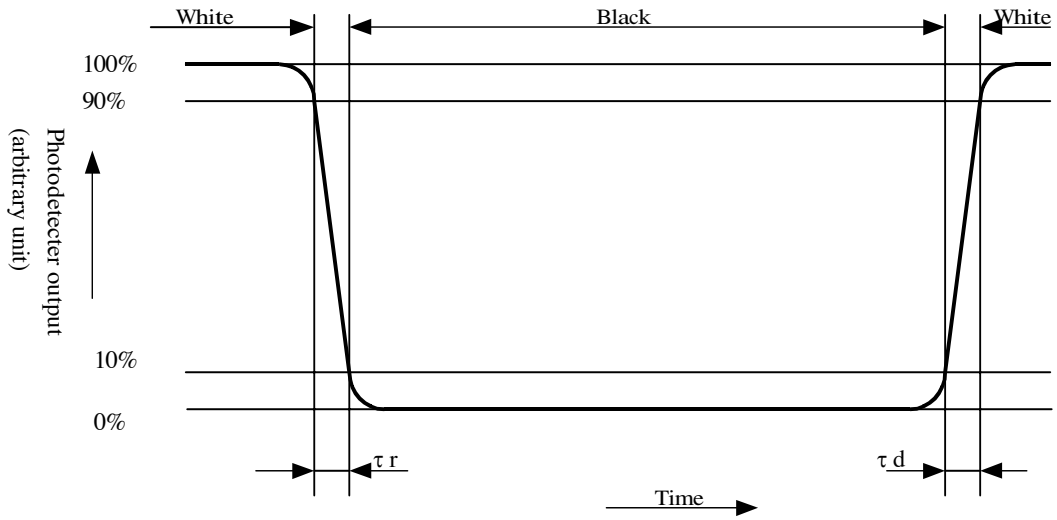

[Note 9-4] A measurement device is Minolta CM-2002.

[Note 9-5] Definition of reflection ratio

$$\text{Reflection ratio} = \frac{\text{Light detected level of the reflection by the LCD module}}{\text{Light detected level of the reflection by the standard white board}}$$

[Note 9-6] A measurement device is ELDIM EZContrast

[Note 9-7] This is the reference value. The White-LED life time is defind as a time when brightness not to become under 50% of the original value(at Ta=25℃)

(10)Touch panel characteristics

Table 13

Parameter	Min.	Typ.	Max.	Unit	Remark
Input voltage	－	5.0	7.0	V	
Resistor between terminals(XL-XR)	200	－	640	Ω	Provisional specification
Resistor between terminals(YU-YD)	150	－	550	Ω	
Line linearity(X direction)	－	－	1.5	%	
Line linearity(Y direction)	－	－	1.5	%	
Insuration resistance	20	－	－	MΩ	at DC25V
Minimum tension for detecting	－	－	0.79	N	

(11)Display quality

The display quality of the color TFT-LCD module shall be in compliance with the Incoming Inspection Standards for TFT-LCD..

(12)Mechanical characteristics

12-1) External appearance

See Fig. 1

12-2) FPC (for LCD panel) characteristics

(1)Specific connector

FH12A-50S-0.5SH(HIROSE)

(2) Bending endurance of the bending slits portion

No line of the FPC is broken for the bending test (Bending radius=0.6mm and angle=90°) in 30 cycles.

12-3) Design guidance for touchpanel(T/P)

12-3-1)Example of housing design

(1)If an consumer will put a palm on housing in normal usage, care should be taken as follows.

(2)Keep the gap, for example 0.3 to 0.7mm,between bezel edge and T/P surface.

The reason is to avoid the bezel edge from contacting T/P surface that may cause a “short” with bottom layer(See Fig.2)

(3)Insertion a cushion material is recommended.

(4)The cushion material should be limited just on the busbar insulation paste area.

If it is over the transparent insulation paste area, a ”short” may be occurred.

(5)There is one where a resistance film is left in the T/P part of the end of the pole.

Design to keep insulation from the perimeter to prevent from mis-operation and so on.

12-3-2)Mounting on display and housing bezel

(1)In all cases, the T/P should be supported from the backside of the Plastic.

(2)Do not to use an adhensive-tape to bond it on the front of T/P and hang it to the housing bezel.

(3)Never expand the T/P top layer(PET-film) like a balloon by internal air pressure.
The life of the T/P will be extremely short.

(4)Top layer, PET, dimension is changing with environmental temperature and humidity.
Avoid a stress from housing bezel to top layer, because it may cause “waving”.

(5)The input to the Touchpanel sometimes distorts touch panel itself.

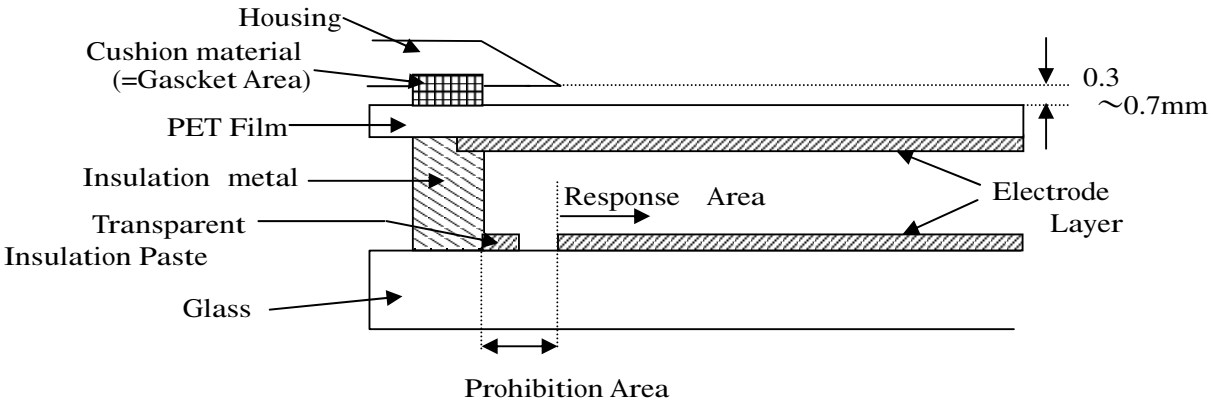

Fig.2

(13)Handling Precautions

13-1) Insertion and taking out of FPCs

Be sure insert and take out of the FPC into the connector of the set after turning off the power supply on the set side.

13-2) Handling of FPCs

The FPC for LCD panel shall be bent only slit portion. The bending slit shall be bent uniformly on the whole slit portion with bending radius larger than 0.6mm ,and only inner side (back side of the module). Don't bend it outer side (display surface side).

Don't give the FPCs too large force, for example, hanging the module with holding FPC.

13-3) Installation of the module

On mounting the module, be sure to fix the module on the same plane. Taking care not to warp or twist the module.

13-4)Precaution when mounting

(1) If water droplets and oil attaches to it for a long time, discoloration and staining occurs. Wipe them off immediately.

(2) Glass is used for the TFT-LCD panel. If it is dropped or bumped against a hard object, it may be broken. Handle it with sufficient care.

(3)As the CMOS IC is used in this module, pay attention to static electricity when handling it. Take a measure for grounding on the human body.

13-5)Others

(1) The liquid-crystal is deteriorated by ultraviolet rays. Do not leave it in direct sunlight and strong ultraviolet rays for many hours.

(2) If it is kept at a temperature below the rated storage temperature, it becomes coagulated and the panel may be broken. Also, if it is kept at a temperature above the rated storage temperature, it becomes isotropic liquid and does not return to its original state. Therefore, it is desirable to keep it at room temperature as much as possible.

(3) If the LCD breaks, don't put internal liquid crystal into the mouth. When the liquid crystal sticks to the hands, feet and clothes, wash it out immediately.

(4) Wipe off water drop or finger grease immediately. Long contact with water may cause discoloration or spots.

(5) Observe general precautions for all electronic components.

(6) VCOM must be adjusted on condition of your final product. No adjustment causes the deterioration for display quality.

(7) Static image should not be displayed more than 5 minutes in order to prevent from occurrence of residual image.

(8) If local pressure joins T/P surface for a long time, it will become the cause of generating of Newton's ring.

(14)Reliability Test Conditions for TFT-LCD Module

Table 14

No.	Test items	Test conditions
1	High temperature storage test	Ta=+70℃ 240h
2	Low temperature storage test	Ta=-25℃ 240h
3	High temperature and high humidity operating test	Tp=+40℃ , 95%RH 240h (But no condensation of dew)
4	High temperature operating test	Tp=+70℃ 240h
5	Low temperature operating test	Tp=-10℃ 240h
6	Electro static discharge test	±200V・200pF(0Ω) to Terminals(Contact) (1 time for each terminals) ±8kV・150pF(330Ω) to Housing bezel or TP(Contact) ±15kV・150pF(330Ω) to Housing bezel or TP(in Air)
7	Shock tset	980 m/s^2, 6 ms ±X,±Y,±Z 3 times for each direction (JIS C0041, A-7 Condition C)
8	Vibration test	Frequency range: 10Hz～55Hz Stroke: 1.5 mm Sweep: 10Hz～55Hz X,Y,Z 2 hours for each direction (total 6 hours) (JIS C0040,A-10 Condition A)
9	Heat shock test	Ta=-25℃～+70℃ / 5 cycles (1h) (1h)
10	Point activation test (Touch panel)	Hit it 1,000,000 times with a silicon rubber of R8 HS 60. Hitting force :2.4N Hitting speed : 3 times per second
11	Writing friction resistance test (Touch panel)	Write according to the right illustration in the undermentioned conditions: Pen : 0.8R Polyacetal stylus Load : 2.4N Speed : 3 strokes per second Stroke : 30mm Frequency : 100000 times Testing apparatus : shown in Fig (I)
12	FPC Bending Test	Bending 30 times by bending radius R0.6mm and angle=90° (LCD FPC) Bending 10 times by bending radius R1.0mm (T/P FPC)

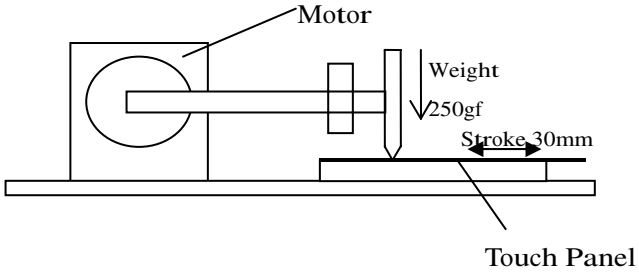

Fig.(I)

【Note】Ta = Ambient temperature, Tp = Panel temperature

【Check items】

(a)Test No.1～9

In the standard condition, there shall be no practical problems that may affect the display function.

(b)Test No.10～No.11

The measurements after the tests are satisfied (10)-Table 13 (Touch panel characteristics)

(15) Others

15-1)Indication of lot number

The lot number is shown on a label. Attached location is shown in Fig.1 (Outline Dimensions).

Indicated contents of the label

LQ035Q7DH01 ○○○○○○○○
model No. lot No.

15-2) Used Regulation of Chemical Substances Breaking Ozone Stratum

Substances with the object of regulating : CFCS, Carbon tetrachloride, Halon
1,1,1-Trichloro ethane (Methyl chloroform)

(a) This LCD module, Constructed part and Parts don't contain the above substances.

(b) This LCD module, Constructed part and Parts don't contain the above substances in processes of manufacture.

15-3) If some problems arise about mentioned items in this document and other items, the user of the TFT-LCD module and Sharp will cooperate and make efforts to solve the problems with mutual respect and good will.

16)Forwarding form(see Fig. 3 Package Form)

a) Piling number of cartons : Max 20

b) Package quality in one cartons : 50pcs

c) Carton size : 562mm x 311mm x 75mm

d) Total mass of 1 carton filled with full modules : 3550g

Conditions for storage.

Environment

(1)Temperature : 0～40℃

(2)Humidity : 60%RH or less (at 40℃)
No dew condensation at low temperature and high humidity.

(3)Atmosphere : Harmful gas, such as acid or alkali which bites electronic components and/or wires, must not be detected.

(4)Period : about 3 months

(5)Opening of the package : In order to prevent the LCD module from breakdown by electrostatic charges, please control the room humidity over 50%RH and open the package taking sufficient countermeasures against electrostatic charges, such as earth, etc

SHARP

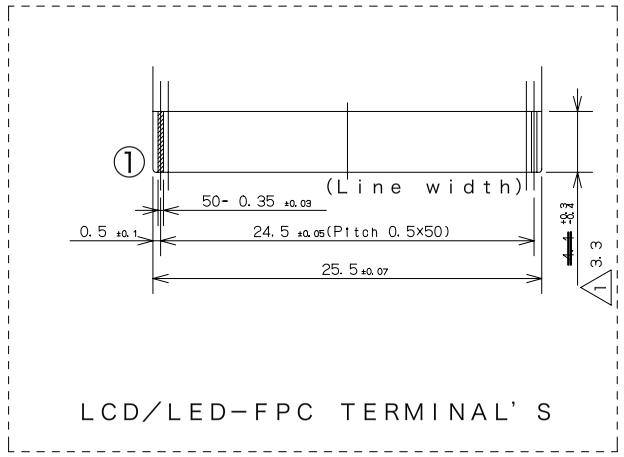

Fitting CN : HIROSE
FH12-50S-0.5SH(05)

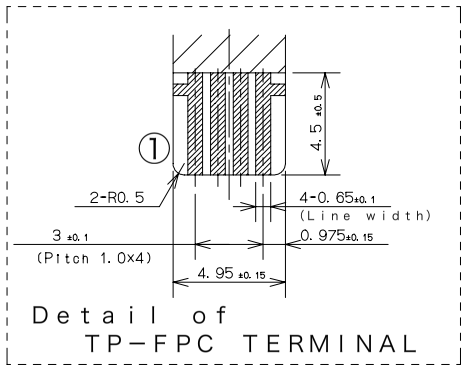

Fitting CN : JST
04(1.0)9FLH-RSM1-TB

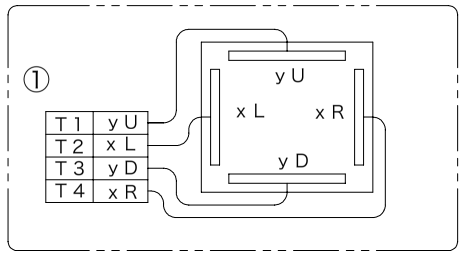

T.P Top View

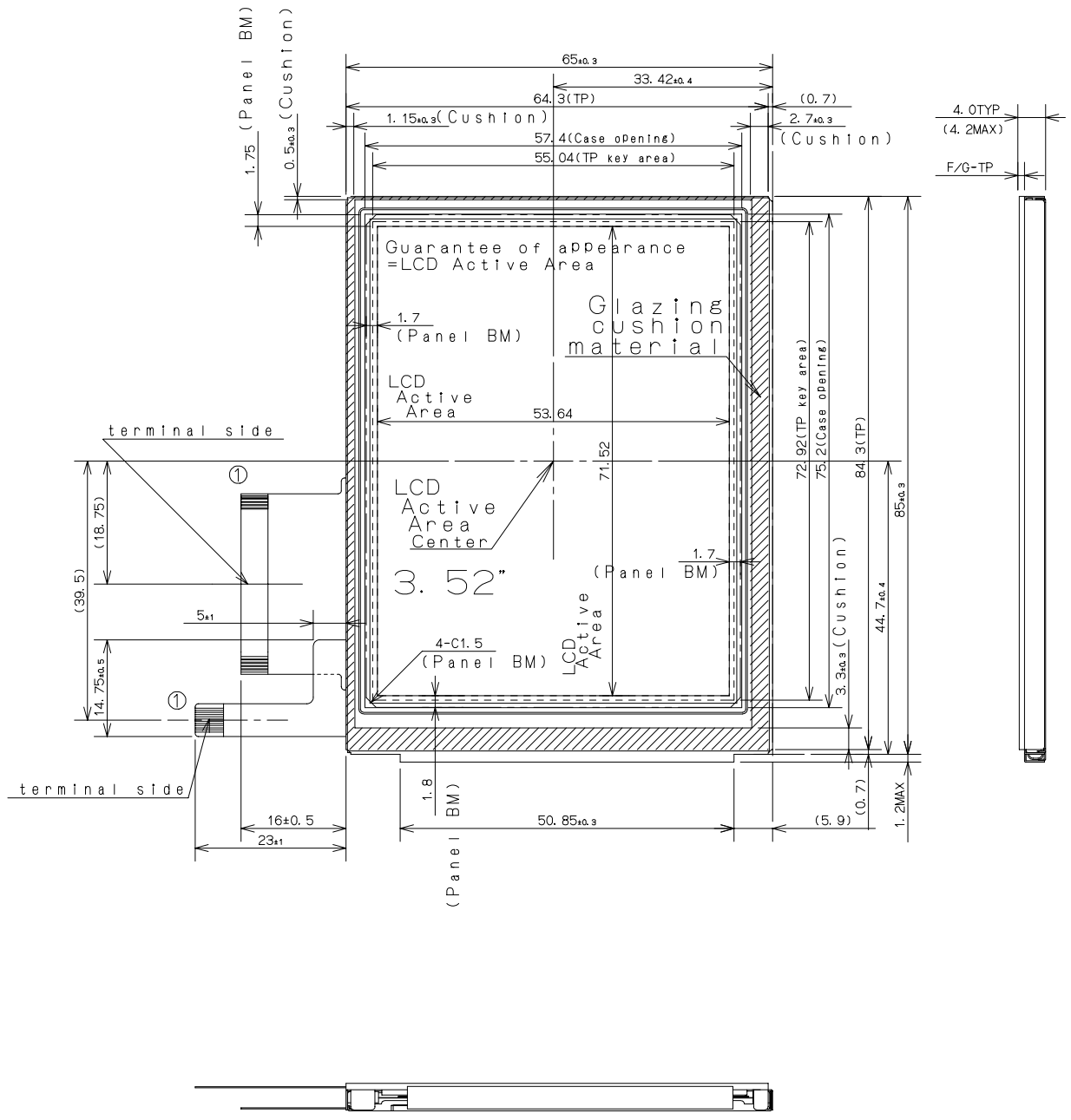

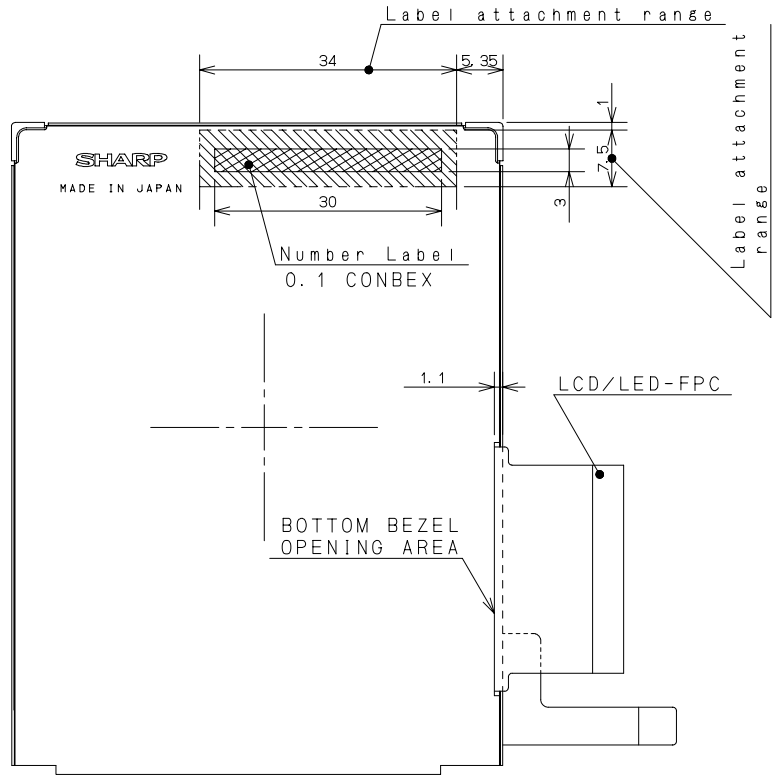

3.52" 240 × 320 pixel
dot pitch : 0.0745 (H) mm
: 0.2235 (V) mm

Fig.1 Outline Dimmension

Unit is mm

- General tolerance is ±0.5mm
- LCD/LED-FPC bend radius: Min. 0.6mm
- TP-FPC bend radius: Min. 1mm
- Take care in set design to hide the scratches and bubbles appeared on the polarizer or other frame area which is located outside of guarantee area.
- The light of Back Light is leaking from BM outside, please light shielding by the set.
- The tolerance of module width are exclude warp of case.
- Glazing cushion material shuould be limited just on the busbar insuration paste area.

改訂日	改訂記事 REVISION	担当
5		
4		
3		
2		
1 2003.10.20	Changing of LCD FPC TERMINAL	Y.T

設計 DESIGNER	製図 DRAFTER	検図 DSN CK	検図 DSN CK	承認 ENG APPD
Y.Takao				

シャープ株式会社
モバイル液晶(事本)設計センター第6開発部
SHARP CORPORATION

ORIGINAL MODEL	LQ035Q7DH01
画面サイズ ACTIVE AREA SIZE	89.4(3.52") 0.2235mm 240RGB×320
尺度 SCALE	1/1
日付 DATE	13. Jun. 2003
単位 Unit	mm
名称 NAME	Outline Dimensions
ユーザー USER	
原紙サイズ	A4
図番 DRAWING NO	LDM-030006B

LCP-03015-21

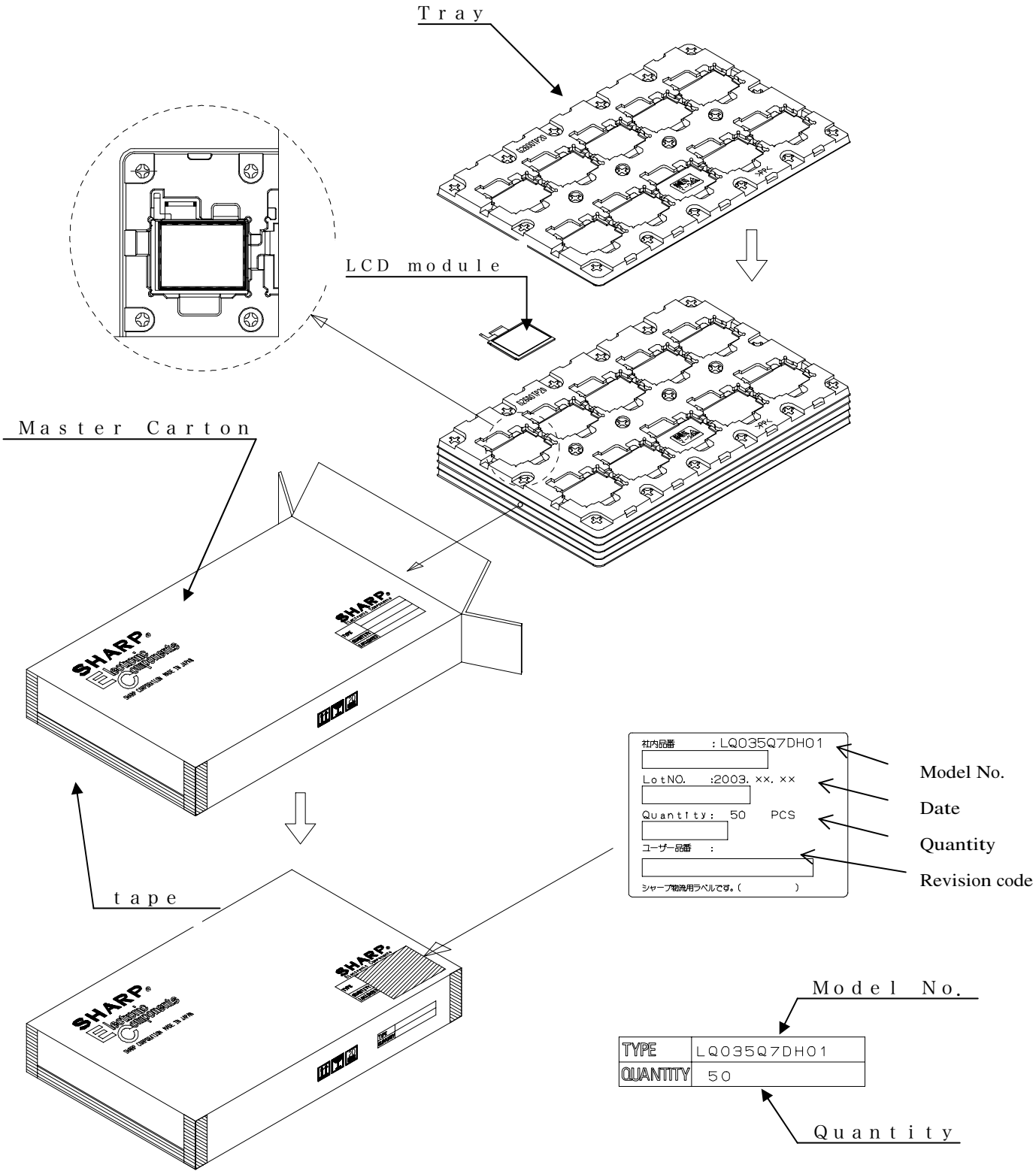

Fig.3 Forwarding Form

SPECIFICATIONS ARE SUBJECT TO CHANGE WITHOUT NOTICE.

Suggested applications (if any) are for standard use; See Important Restrictions for limitations on special applications. See Limited Warranty for SHARP's product warranty. The Limited Warranty is in lieu, and exclusive of, all other warranties, express or implied. ALL EXPRESS AND IMPLIED WARRANTIES, INCLUDING THE WARRANTIES OF MERCHANTABILITY, FITNESS FOR USE AND FITNESS FOR A PARTICULAR PURPOSE, ARE SPECIFICALLY EXCLUDED. In no event will SHARP be liable, or in any way responsible, for any incidental or consequential economic or property damage.

SHARP®

NORTH AMERICA

SHARP Microelectronics of the Americas
5700 NW Pacific Rim Blvd.
Camas, WA 98607, U.S.A.
Phone: (1) 360-834-2500
Fax: (1) 360-834-8903
Fast Info: (1) 800-833-9437
www.sharpsma.com

EUROPE

SHARP Microelectronics Europe
Division of Sharp Electronics (Europe) GmbH
Sonninstrasse 3
20097 Hamburg, Germany
Phone: (49) 40-2376-2286
Fax: (49) 40-2376-2232
www.sharpsme.com

JAPAN

SHARP Corporation
Electronic Components & Devices
22-22 Nagaike-cho, Abeno-Ku
Osaka 545-8522, Japan
Phone: (81) 6-6621-1221
Fax: (81) 6117-725300/6117-725301
www.sharp-world.com

TAIWAN

SHARP Electronic Components
(Taiwan) Corporation
8F-A, No. 16, Sec. 4, Nanking E. Rd.
Taipei, Taiwan, Republic of China
Phone: (886) 2-2577-7341
Fax: (886) 2-2577-7326/2-2577-7328

SINGAPORE

SHARP Electronics (Singapore) PTE., Ltd.
438A, Alexandra Road, #05-01/02
Alexandra Technopark,
Singapore 119967
Phone: (65) 271-3566
Fax: (65) 271-3855

KOREA

SHARP Electronic Components
(Korea) Corporation
RM 501 Geosung B/D, 541
Dohwa-dong, Mapo-ku
Seoul 121-701, Korea
Phone: (82) 2-711-5813 ~ 8
Fax: (82) 2-711-5819

CHINA

SHARP Microelectronics of China
(Shanghai) Co., Ltd.
28 Xin Jin Qiao Road King Tower 16F
Pudong Shanghai, 201206 P.R. China
Phone: (86) 21-5854-7710/21-5834-6056
Fax: (86) 21-5854-4340/21-5834-6057
Head Office:
No. 360, Bashen Road,
Xin Development Bldg. 22
Waigaoqiao Free Trade Zone Shanghai
200131 P.R. China
Email: smc@china.global.sharp.co.jp

HONG KONG

SHARP-ROXY (Hong Kong) Ltd.
3rd Business Division,
17/F, Admiralty Centre, Tower 1
18 Harcourt Road, Hong Kong
Phone: (852) 28229311
Fax: (852) 28660779
www.sharp.com.hk
Shenzhen Representative Office:
Room 13B1, Tower C,
Electronics Science & Technology Building
Shen Nan Zhong Road
Shenzhen, P.R. China
Phone: (86) 755-3273731
Fax: (86) 755-3273735