PREPARED BY: DATE	SHARP	SPEC No. LCY-407301A
		FILE No.
APPROVED BY: DATE	MOBILE LIQUID CRYSTAL DISPLAY GROUP II SHARP CORPORATION	ISSUE 6.APR 2007
		PAGE 32 Pages
		APPLICABLE DIVISION ENGINEERING DEPARTMENT Ⅲ MOBILE LIQUID CRYSTAL DISPLAY GROUP I SHARP CORPORATION
	SPECIFICATION	

DEVICE SPECIFICATION for

TFT Color LCD Module

(240 × RGB × 320 dots)

Model No.

LS020Q3UX03

☐ CUSTOMER'S APPROVALDATE

DATE _____

BY _____

PRESENTED BY F. Kinoshita

Fumio Kinoshita
DEPARTMENT GENERAL MANAGER
ENGINEERING DEPARTMENT Ⅲ
MOBILE LIQUID CRYSTAL DISPLAY GROUP I
SHARP CORPORATION

RECORDS OF REVISION

DOC. First issue	29.Mar 2007
Model No.	LS020Q3UX03
Spec. No.	LCY-407301A

DATE	REF.PAGE PARAGRAPH DRAWING No.	REVISED NO.	SUMMARY	CHECK AND APPROVAL
6.Apr.2007	Page.8	△1	Changed LED backlight Specification	F. Kinoshita
	Page.14		Changed optical characteristics	
	Page.17		Changed Temperature Cycling	
	Page.18~19		Added Mechanical strength	
	Page.23		Changed VCS1 setting	

NOTICE

○ These specification sheets are the proprietary product of SHARP CORPORATION ("SHARP) and include materials protected under copyright of SHARP. Do not reproduce or cause any third party to reproduce them in any form or by any means, electronic or mechanical, for any purpose, in whole or in part, without the express written permission of SHARP.

○ The application examples in these specification sheets are provided to explain the representative applications of the device and are not intended to guarantee any industrial property right or other rights or license you to use them. SHARP assumes no responsibility for any problems related to any industrial property right of a third party resulting from the use of the device.

○ The device listed in these specification sheets was designed and manufactured for use in Telecommunication equipment (terminals)

○ In case of using the device for applications such as control and safety equipment for transportation (aircraft, trains, automobiles, etc.), rescue and security equipment and various safety related equipment which require higher reliability and safety, take into consideration that appropriate measures such as fail-safe functions and redundant system design should be taken.

○ Do not use the device for equipment that requires an extreme level of reliability, such as aerospace applications, telecommunication equipment (trunk lines), nuclear power control equipment and medical or other equipment for life support.

○ SHARP assumes no responsibility for any damage resulting from the use of the device which does not comply with the instructions and the precautions specified in these specification sheets.

○ Contact and consult with a SHARP sales representative for any questions about this device.

[For handling and system design]

(1) Do not scratch the surface of the polarizer film as it is easily damaged.

(2) If the cleaning of the surface of the LCD panel is necessary, wipe it swiftly with cotton or other soft cloth. Do not use organic solvent as it damages polarizer.

(3) Water droplets on polarizer must be wiped off immediately as they may cause color changes, or other defects if remained for a long time.

(4) Since this LCD panel is made of glass, dropping the module or banging it against hard objects may cause cracks or fragmentation.

(5) Certain materials such as epoxy resin (amine's hardener) or silicone adhesive agent (de-alcohol or de-oxym) emits gas to which polarizer reacts (color change). Check carefully that gas from materials used in system housing or packaging do not hart polarizer.

(6) Liquid crystal material will freeze below specified storage temperature range and it will not get back to normal quality even after temperature comes back within specified temperature range. Liquid crystal material will become isotropic above specified temperature range and may not get back to normal quality. Keep the LCD module always within specified temperature range.

(7) Do not expose LCD module to the direct sunlight or to strong ultraviolet light for long time.

(8) If the LCD driver IC (COG) is exposed to light, normal operation may be impeded. It is necessary to design so that the light is shut off when the LCD module is mounted.

(9) Do not disassemble the LCD module as it may cause permanent damage.

(10) As this LCD module contains components sensitive to electrostatic discharge, be sure to follow the instructions in below.

① Operators

Operators must wear anti-static wears to prevent electrostatic charge up to and discharge from human body.

② Equipment and containers

Process equipment such as conveyer, soldering iron, working bench and containers may possibly generate electrostatic

charge up and discharge. Equipment must be grounded through 100Mohms resistance. Use ion blower.

③ Floor

Floor is an important part to leak static electricity which is generated from human body or equipment.
There is a possibility that the static electricity is charged to them without leakage in case of insulating floor, so the countermeasure(electrostatic earth:$1 \times 10^8 \Omega$) should be made.

④Humidity

Proper humidity of working room may reduce the risk of electrostatic charge up and discharge. Humidity should be kept over 50% all the time.

⑤Transportation/storage

Storage materials must be anti-static to prevent causing electrostatic discharge.

⑥Others

Protective film is attached on the surface of LCD panel to prevent scratches or other damages. When removing this protective film, remove it slowly under proper anti-ESD control such as ion blower.

(11) Hold LCD very carefully when placing LCD module into the system housing. Do not apply excessive stress or pressure to LCD module. Do not to use chloroprene rubber as it may affect on the reliability of the electrical interconnection.

(12) Do not hold or touch LCD panel to flex interconnection area as it may be damaged.

(13) As the binding material between LCD panel and flex connector mentioned in 12) contains an organic material, any type of organic solvents are not allowed to be used. Direct contact by fingers is also prohibited.

(14) When carrying the LCD module, place it on the tray to protect from mechanical damage. It is recommended to use the conductive trays to protect the CMOS components from electrostatic discharge. When holding the module, hold the Plastic Frame of LCD module so that the panel, COG and other electric parts are not damaged.

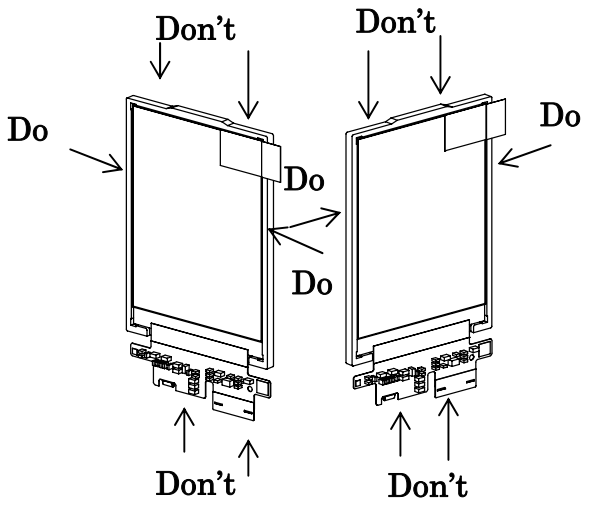

(15) Do not touch the COG's patterning area. Otherwise the circuit may be damaged.

(16) Do not touch LSI chips as it may cause a trouble in the inner lead connection.

(17) Place a protective cover on the LCD module to protect the glass panel from mechanical damages.

(18) LCD panel is susceptible to mechanical stress and even the slightest stress will cause a color change in background. So make sure the LCD panel is placed on flat plane without any continuous twisting, bending or pushing stress.

(19) Protective film is placed onto the surface of LCD panel when it is shipped from factory. Make sure to peel it off before assembling the LCD module into the system. Be very careful not to damage LCD module by electrostatic discharge when peeling off this protective film. Ion blower and ground strap are recommended.

(20) Make sure the mechanical design of the system in which the LCD module will be assembled matches specified viewing

angle of this LCD module.

(21) This LCD module does not contain nor use any ODS (1,1,1-Trichloroethane, CCL4) in all materials used, in all production processes.

[For operating LCD module]

(1) Do not operate or store the LCD module under outside of specified environmental conditions.

(2) At the shipment, adjust the contrast of each LCD module with electric volume. LCD contrast may vary from panel to panel depending on variation of LCD power voltage from system.

(3) As opt-electrical characteristics of LCD will be changed, dependent on the temperature, the confirmation of display quality and characteristics has to be done after temperature is set at 25 °C and it becomes stable.

[Precautions for Storage]

(1) Do not expose the LCD module to direct sunlight or strong ultraviolet light for long periods. Store in a dark place.

(2) The liquid crystal material will solidify if stored below the rated storage temperature and will become an isotropic liquid if stored above the rated storage temperature, and may not retain its original properties. Only store the module at normal temperature and humidity (25±5°C,60±10%RH) in order to avoid exposing the front polarizer to chronic humidity.

(3) Keeping Method

a. Don't keeping under the direct sunlight. b. Keeping in the tray under the dark place.

DON'T DO

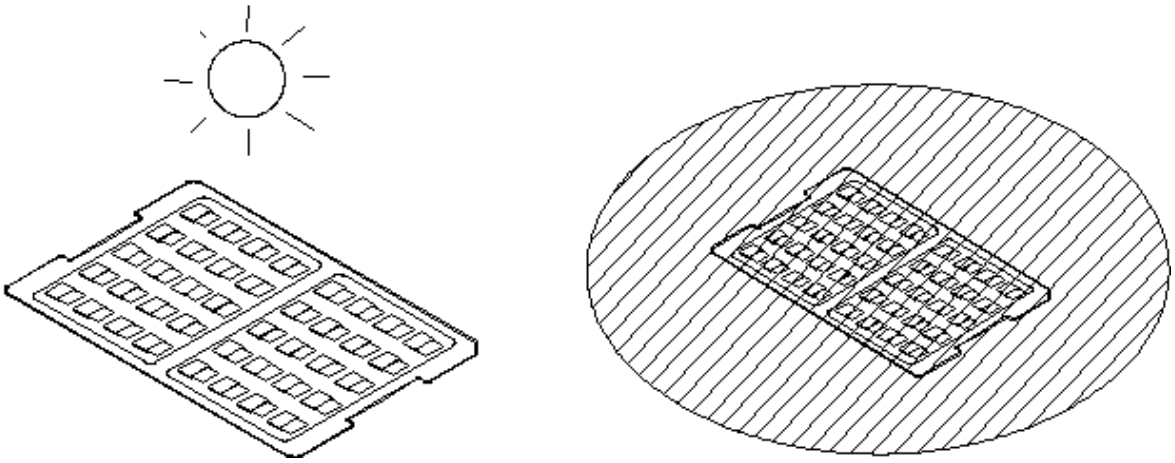

(1) Do not operate or store the LCD module under outside of specified environmental conditions.

(2) Be sure to prevent light striking the chip surface.

[Other Notice]

(1) Do not operate or store the LCD module under outside of specified environmental conditions.

(2) As electrical impedance of power supply lines (VCC2-VSS) are low when LCD module is working, place the de-coupling capacitor near by LCD module as close as possible.

(3) Reset signal must be sent after power on to initialize LSI. LSI does not function properly until initialize it by reset signal.

(4) Generally, at power on, in order not to apply DC charge directly to LCD panel, supply logic voltage first and initialize LSI logic function including polarity alternation. Then supply voltage for LCD bias. At power off, in order not to apply DC charge directly to LCD panel, execute Power OFF sequence and Discharge command.

(5) Don't touch to PWB surface, exposed IC chip, electric parts and other parts, to any electric, metallic materials.

(6) No bromide specific fire-retardant material is used in this module.

(7) Do not display still picture on the display over 2 hours as this will damage the liquid crystal.

[Precautions for Discarding Liquid Crystal Modules]

COG: After removing the LSI from the liquid crystal panel, dispose of it in a similar way to circuit boards from electronic devices.
LCD panel: Dispose of as glass waste. This LCD module contains no harmful substances. The liquid crystal panel contains no dangerous or harmful substances. The liquid crystal panel only contains an extremely small amount of liquid crystal (approx.100mg) and therefore it will not leak even if the panel should break.
-Its median lethal dose (LD50) is greater than 2,000 mg/kg and a mutagenetic (Aims test: negative) material is employed.
FPC: Dispose of as similar way to circuit board from electric device.

1. Application

This data sheet is to introduce the specification of LS020Q3UX03 active matrix 262,144color LCD module.
Main color LCD module is controlled by Driver IC (JBT6K85).
If any problem occurs concerning the items not stated in this specification, it must be solved sincerely by both parties after deliberation.
As to basic specification of driver IC refer to the IC specification and handbook.

2. Construction and Outline

Construction: LCD panel, Driver (COG), FPC with electric components,
(3) White LED lump, prism sheet, diffuser, light guide and reflector, plastic frame to fix them mechanically.
Outline: See page 31
Connection: 35 pins; 0.3mm pitch
There shall be no scratches, stains, chips, distortions and other external drawbacks that may affect the display function.

Rejection criteria shall be noted in Inspection Standard (S-U-056-xx)

In order to realize thin module structure, double-sided adhesive tapes are used to fix LCD panels. As these tapes do not guarantee to permanently fix the panels, LCD panel may rise from the module when shipped from factory.
So please make sure to design the system to hold the edges of LCD panel by the soft material such as sponge when LCD module is assembled into the cabinet.

3. Mechanical Specification

Table 1

Parameter		Specifications	Unit
Outline dimensions (typ)		37.2 (W) × 65.10 (H) × 1.9 (D)	mm
Main LCD Panel	Active area	30.60 (W) × 40.80 (H)	mm
	Viewing area	31.60 (W) × 41.80 (H)	mm
	Display format	240×RGB(W)×320(H)	-
	Dot pitch	0.0425 (W) ×0.1275 (H)	mm
	Base color *1	Normally Black	-
Mass		Approx 5.6	g

*1 Due to the characteristics of the LC material, the colors vary with environmental temperature.

4. Absolute Maximum Ratings

(4-1) Electrical absolute maximum ratings

Table 2 Ta=25 ℃

Parameter	Symbol	Min	Max	Unit	Remark
Supply voltage	VCC1-GND	-0.3	4.6	V	
	VCC2-GND	-0.3	4.6	V	
Input Voltage	V_{IN}	-0.3	VCC1+0.3	V	*1

*1 Input terminal of logic system. : Voltage value is based on GND = 0V.

Environment Conditions

Table 3

Item	Top		Tstg		Remark
	MIN.	MAX.	MIN.	MAX.	
Ambient temperature	-10 °C	+60°C	-20 °C	+70°C	Note 2)
Humidity	Note 1)		Note 1)		No condensation

Note1) Ta ≤ 40 °C.....95 % RH Max

Note2) Ta > 40 °C.....Absolute humidity shall be less than Ta=40 °C /95 % RH.

As opt-electrical characteristics of LCD will be changed, dependent on the temperature, the confirmation of display quality and characteristics has to be done after temperature is set at 25 °C and it becomes stable. Be sure not to exceed the rated voltage, otherwise a malfunction may occur.

5. Electrical Specifications

(5-1) Electrical characteristics for main LCD

Table 4

Ta=25 ℃, GND=0V

Parameter	Symbol	Conditions	Min.	Typ.	Max.	Unit	Applicable Pin
Supply voltage	VCC1-VSS	Ta=-10～60 °C	1.65	2.60	3.60	V	(note 1)
Supply voltage	VCC2-VSS	Ta=-10～60 °C	2.70	2.80	2.90	V	(note 1)
”H” level input voltage	V_{IH1}	Ta=-10～60 °C	0.7 V_{CC1}	-	-	V	(note 2)
”L” level input voltage	V_{IL1}		-	-	0.3 V_{CC1}	V	(note 2)
Input leakage current	I_{LI1}	Ta=-10～60 °C	-10	-	10	μA	(note 2)
Output leakage current	I_{LO}	V_{IN}= GND or VCC1	-10	-	10	μA	(note 3)
”H” level output voltage	V_{OH1}	Ta=-10～60 °C	0.8 V_{CC1}	-	-	V	(note 4)
”L” level output voltage	V_{OL1}	I_{OH1}=-1 mA , I_{OL1} = 1 mA	-	-	0.2 V_{CC1}	V	
Current consumption	I_{cc2}	Ta=25 °C	-	6.3	9.0	mA	(note 5)

(note 1) The condition VCC1 ≤ VCC2 must be met

(note 2) Input mode of D0～D15pins, A0, RD, WR, CS, RESET

(note 3) Output mode of D0～D15pins.

(note 4) Output mode of D0～D15 pins.

(note 5) Following Conditions

Ta=25℃, frame frequency=65Hz

Display Pattern: RGB Checker Pattern. No Host CPU access.

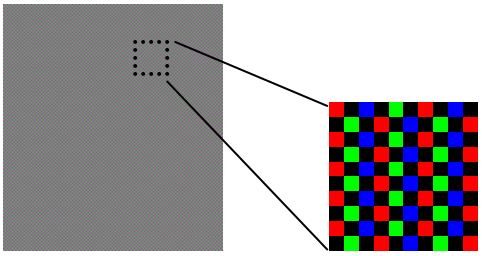

RGB Checker Pattern

(5-2) LED back light ⚠

(1) At main panel the back light uses 3pcs edge light type white LED.

Table 5

Parameter	Conditions	Symbol	Min.	Typ.	Max.	Unit	Remark
Forward current	Ta=25 °C	I_{LED}	-	20 *1	-	mA	VLED-LED_Cathode1~3

LED lamp: GM4BW63374A (SHARP Corporation)

([Luminous Intensity rank]: E2, F1 or F2 [Color rank]: b54 or b56 or b83)

*1 per one piece of LED

*Please consider Allowable Forward Current on used temperature

(refer to Ambient Temperature vs. Allowable Forward Current curve)

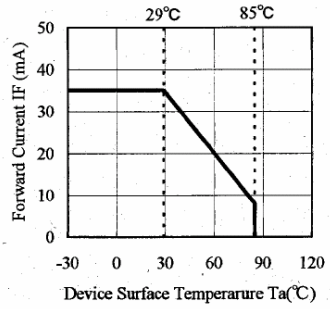

3-1. Absolute maximum ratings

(Ta=25℃) (*3)

Parameter	Symbol	Rating	Unit
Power dissipation	P	130	mW
Continuous forward current	I_F	35	mA
Peak forward current(*1)	I_{FM}	80	mA
Derating factor	DC	-0.53	mA/℃
	Pulse	-1.07	mA/℃
Reverse voltage	V_R	5	V
Operating temperature(*3)	Topr	-30 to +85	°C
Storage temperature	T_{stg}	-40 to +100	°C
Soldering temperature (*2)	T_{sol}	260	°C

(*1) Duty ratio = 1/10, Pulse width = 0.1ms

(*2) For reflow soldering (Max.10s)

Refer to "7-2.Soldering" for the condition in the hand solder.

(*3) Ta and Topr mean atmospheric temperature near surface of the device when the device does not operate.

Luminous intensity rank table (*1)

Rank	Luminous Intensity			Unit
E1	1440	~	1580	mcd
E2	1580	~	1720	
F1	1720	~	1880	
F2	1880	~	2050	
G1	2050	~	2240	

(I_F=20mA, Ta=25℃)

(*1) The quantity-ratio of the ranks are decided by Sharp. (measurement accuracy : ±10%)

The delivery ratio of each rank isn't decided to be asked to it.

3-2. Electro-optical characteristics

(Ta=25℃)

Parameter	Symbol	Condition	MIN.	TYP.	MAX.	Unit
Forward Voltage	V_F	I_F=20 mA	-	3.2	3.7	V
Luminous intensity(*4)	I_V		1440	(1800)	2240	mcd
Chromaticity(*5)	x		-	0.30	-	-
	y		-	0.29	-	
Reverse Current	I_R	V_R=4V	-	-	50	μA

(*4) Measured by EG&G MODEL550(Radiometer/Photometersystem)

(Measurement accuracy : ±10%)

(*5) Measured by Ohtsuka electronics MODEL MCPD-2000

(Measurement accuracy : x,y:±0.01)

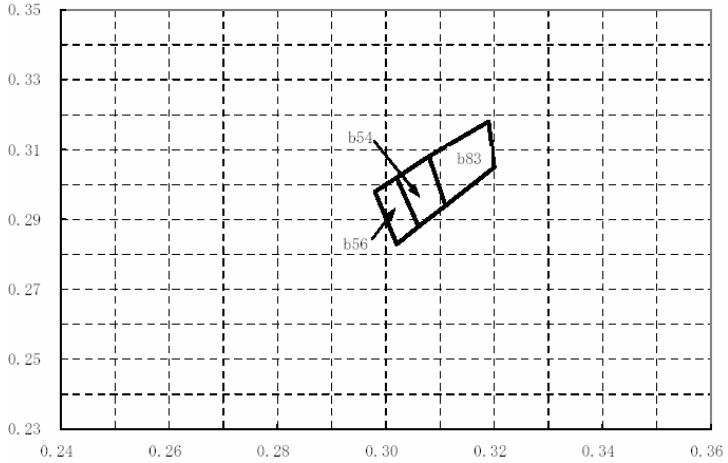

(IF=20mA, Ta=25℃)

rank	Point 1		Point 2		Point 3		Point 4	
	x	y	x	y	x	y	x	y
b54	0.306	0.288	0.302	0.302	0.308	0.308	0.311	0.294
b56	0.302	0.283	0.306	0.288	0.302	0.302	0.298	0.298
b83	0.311	0.283	0.308	0.288	0.319	0.318	0.320	0.305

(5-3) Interface signals

Table 6

Pin No	Symbol	Description	I/O	Remarks
1	VLED	LED1~3 Anode Common	-	
2	LED Cathode1	LED1 Cathode	-	
3	LED Cathode2	LED2 Cathode	-	
4	LED Cathode3	LED3 Cathode	-	
5	VCC2	Power Supply (LCD Driver) for Analog	-	
6	VCC1	Power Supply (LCD Driver) for I/O	-	
7	ID	Vendor Identify	-	Connected to VCC1
8	D15	Data Bus	I/O	
9	D14	Data Bus	I/O	
10	D13	Data Bus	I/O	
11	D12	Data Bus	I/O	
12	D11	Data Bus	I/O	
13	D10	Data Bus	I/O	
14	D9	Data Bus	I/O	
15	D8	Data Bus	I/O	
16	D7	Data Bus	I/O	
17	D6	Data Bus	I/O	
18	D5	Data Bus	I/O	
19	D4	Data Bus	I/O	
20	D3	Data Bus	I/O	
21	D2	Data Bus	I/O	
22	D1	Data Bus	I/O	
23	D0	Data Bus	I/O	
24	GND	GND level pin	-	
25	GND	GND level pin	-	
26	RD	Read enable	I	Low enable
27	WR	Write enable	I	Low enable
28	A0	Data / Command selectable	I	Low: command High: display data / parameter
29	CS	Chip Select	I	Low enable
30	VNSCO	Tearing Effect Output	O	
31	IF2	Bus Width Setting	I	Refer to Circuit Diagram
32	IF1	Bus Width Setting	I	Refer to Circuit Diagram
33	RESET	Reset enable	I	Low enable
34	GND	Ground Level Pin		
35	GND	Ground Level Pin		

Corresponded connector : 0.3mm pitch, ZIF Connector (OMRON XF2B-3545-31A)

Signals connect to LCD module. Symbols correspond able to Circuit diagram in Page 30.

(5-4) Host Interface Timing Diagrams (80-family MPU access) for JBT6K85

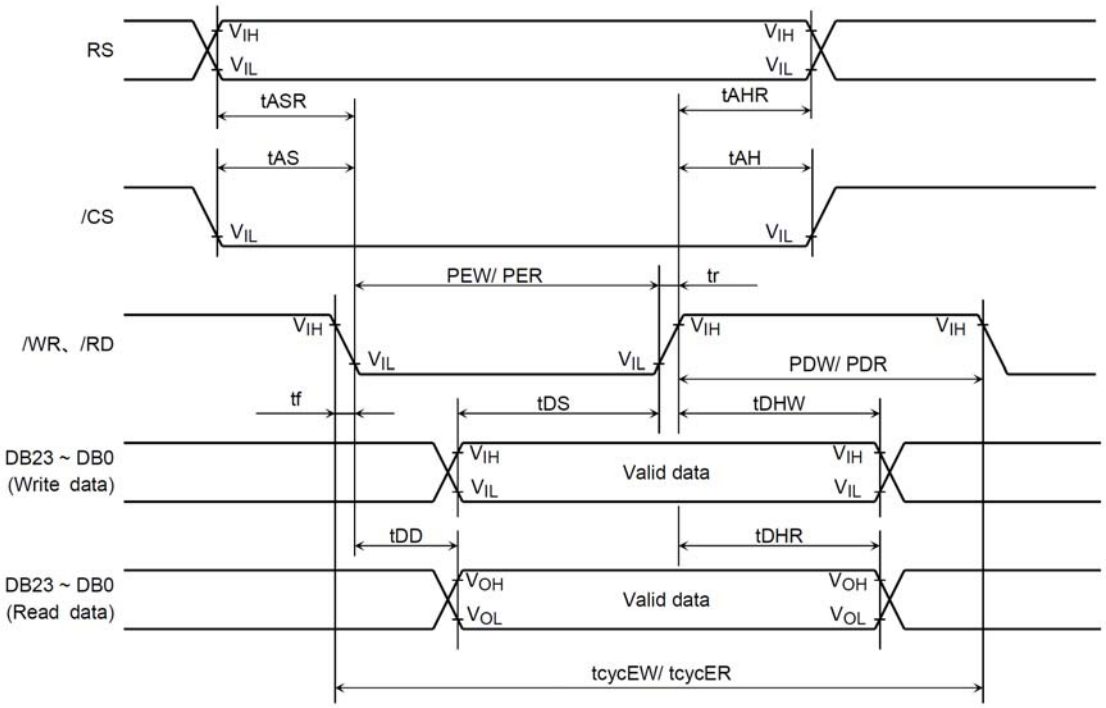

Note17: The following load is connected when measuring the data delay (tDD) and data hold time (tDHR)

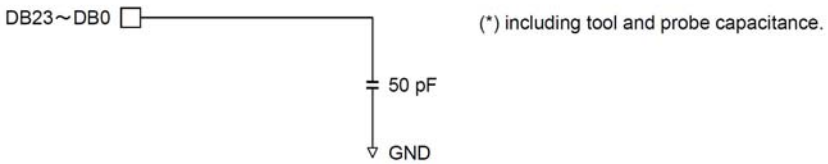

Condition : Nomal Write Mode, VDDIO=1.65～2.4V, Ta = 25℃

Characteristics		Symbol	Test Circuit Test Condition	Min	Typ.	Max	Unit
Enable cycle time	On write	tcycEW	—	120	—	—	ns
	On read	tcycER	—	800	—	—	ns
Enable pulse width (Enable time)	On write	PEW	—	25	—	—	ns
	On read	PER	—	620	—	—	ns
Enable pulse width (Disable time)	On write	PDW	—	55	—	—	ns
	On read	PDR	—	170	—	—	ns
Input signal rising/falling time			—	—	—	20	ns
Address setup time (/CS signal)			—	-4	—	—	ns
Address setup time (RS, R/*W signal)			—	-4	—	—	ns
Address hold time (/CS signal)			—	15	—	—	ns
Address hold time (RS, R/*W signal)			—	15	—	—	ns
Write data setup time			—	18	—	—	ns
Write data hold time			—	18	—	—	ns
Data delay			Note17	—	—	600	ns
Read data hold time			Note17	5	—	—	ns

Note : tDD and tDHR are measured with the load as shown in the figure.

Condition : High speed Write Mode, VDDIO=1.65～2.4V, Ta = 25℃

Characteristics		Symbol	Test Circuit Test Condition	Min	Typ.	Max	Unit
Enable cycle time	On write	tcycEW	—	60	—	—	ns
	On read	tcycER	—	800	—	—	ns
Enable pulse width (Enable time)	On write	PEW	—	20	—	—	ns
	On read	PER	—	620	—	—	ns
Enable pulse width (Disable time)	On write	PDW	—	20	—	—	ns
	On read	PDR	—	170	—	—	ns
Input signal rising/falling time		tEr, tEf	—	—	—	20	ns
Address setup time (/CS signal)		tAS	—	-4	—	—	ns
Address setup time (RS, R/*W signal)		tASR	—	-4	—	—	ns
Address hold time (/CS signal)		tAH	—	15	—	—	ns
Address hold time (RS, R/*W signal)		tAHR	—	15	—	—	ns
Write data setup time		tDS	—	18	—	—	ns
Write data hold time		tDHW	—	18	—	—	ns
Data delay		tDD	Note17	—	—	600	ns
Read data hold time		tDHR	Note17	5	—	—	ns

Note : tDD and tDHR are measured with the load as shown in the figure.

Condition : Nomal Write Mode, VDDIO=2.4～3.6V, Ta = 25℃

Characteristics		Symbol	Test Circuit Test Condition	Min	Typ.	Max	Unit
Enable cycle time	On write	tcycEW	—	100	—	—	ns
	On read	tcycER	—	500	—	—	ns
Enable pulse width (Enable time)	On write	PEW	—	20	—	—	ns
	On read	PER	—	320	—	—	ns
Enable pulse width (Disable time)	On write	PDW	—	40	—	—	ns
	On read	PDR	—	170	—	—	ns
Input signal rising/falling time		tEr, tEf	—	—	—	20	ns
Address setup time (/CS signal)		tAS	—	-1	—	—	ns
Address setup time (RS, R/*W signal)		tASR	—	-1	—	—	ns
Address hold time (/CS signal)		tAH	—	15	—	—	ns
Address hold time (RS, R/*W signal)		tAHR	—	15	—	—	ns
Write data setup time		tDS	—	18	—	—	ns
Write data hold time		tDHW	—	18	—	—	ns
Data delay		tDD	Note17	—	—	300	ns
Read data hold time		tDHR	Note17	5	—	—	ns

Note : tDD and tDHR are measured with the load as shown in the figure.

Condition : High speed Write Mode, VDDIO=2.4～3.6V, Ta = 25℃

Characteristics		Symbol	Test Circuit Test Condition	Min	Typ.	Max	Unit
Enable cycle time	On write	tcycEW	—	50	—	—	ns
	On read	tcycER	—	500	—	—	ns
Enable pulse width (Enable time)	On write	PEW	—	20	—	—	ns
	On read	PER	—	320	—	—	ns
Enable pulse width (Disable time)	On write	PDW	—	20	—	—	ns
	On read	PDR	—	170	—	—	ns
Input signal rising/falling time		tEr, tEf	—	—	—	20	ns
Address setup time (/CS signal)		tAS	—	-1	—	—	ns
Address setup time (RS, R/*W signal)		tASR	—	-1	—	—	ns
Address hold time (/CS signal)		tAH	—	15	—	—	ns
Address hold time (RS, R/*W signal)		tAHR	—	15	—	—	ns
Write data setup time		tDS	—	18	—	—	ns
Write data hold time		tDHW	—	18	—	—	ns
Data delay		tDD	Note17	—	—	300	ns
Read data hold time		tDHR	Note17	5	—	—	ns

Note: tDD and tDHR are measured with the load as shown in the figure.

(5-6) Schematic of LCD module system

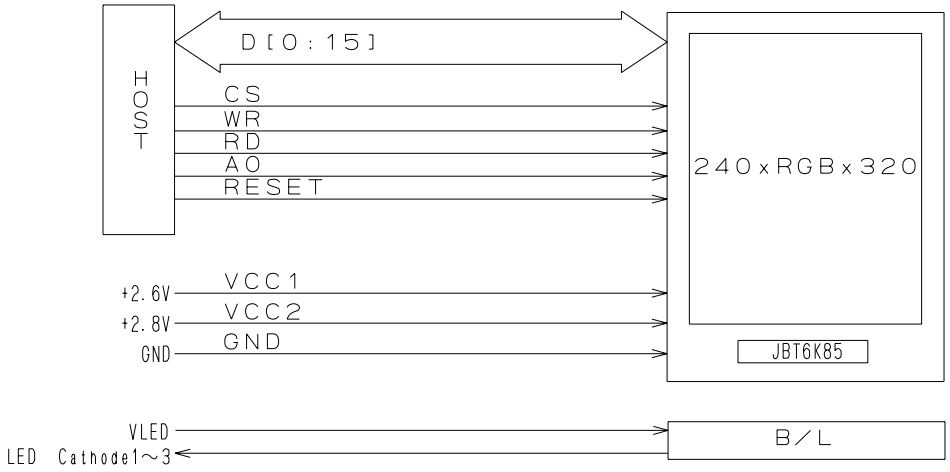

Fig.1 Schematic of LCD module system

(5-7) Circuit diagram

See page 30

6. Optical Characteristics △1

Table 7 VCC1=2.6V, VCC2=2.8V,Ta = 25℃

Optical Characteristics								
Parameter		symbol	conditio	MIN	TYP	MAX	unit	Remark
Brightness		Br	θ =0°	220	320	-	cd/㎡	Note1,2,5
Contrast		Co	θ =0°	300	500	-		Note1,3
Viewing Angle		θ 11	Co > 5	70	80	-	deg	Note1
		θ 12		70	80	-		
		θ 21		70	80	-		
		θ 22		70	80	-		
Response Time	Rise	τ r1	θ =0°	-	11	22	ms	Note1,4
	Decay	τ d1		-	24	48	ms	
White chromaticity		x	θ =0°	0.245	0.295	0.345		Note.1,3
		y		0.26	0.31	0.36		
Red chromaticity		x	θ =0°	0.60	0.65	0.70		
		y		0.29	0.34	0.39		
Green chromaticity		x	θ =0°	0.27	0.32	0.37		
		y		0.58	0.63	0.68		
Blue chromaticity		x	θ =0°	0.09	0.14	0.19		
		y		0.01	0.05	0.10		
Uniformity		-	θ =0°	70	-	-	%	Note.6
NTSC ratio		-	θ =0°	60	70	-	%	
Color Temperature		-	θ =0°	6000	7900	10000	K	
Flicker ratio		-	*1	-	-	7	%	

*1: Measuring condition

- ・Measuring systems: YOKOGAWA 3298_01 + 3298_11
- ・Temperature = 25℃(±3℃), Frame Frequency = 65Hz (-0/+5Hz), LED back-light: ON, Environment brightness < 150 lx
- ・Measuring pattern : Horizontal stripe pattern <black (V0) / gray(V32) / black (V0) /gray (V32)…>
- ・Measured sample : New sample before a long term aging.
- ・Flicker ratio is very sensitive to measuring condition.

Note 1) Definition of range of visual angle

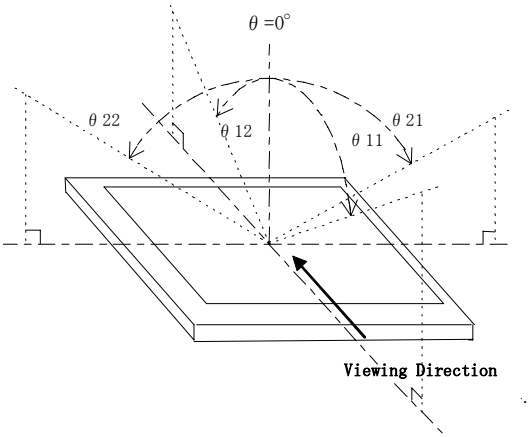

Fig .2 Definition of viewing angle

Note 2) Brightness is measured as shown in Fig.3, and is defined as the brightness of all pixels "White" at the center of display area on optimum contrast.

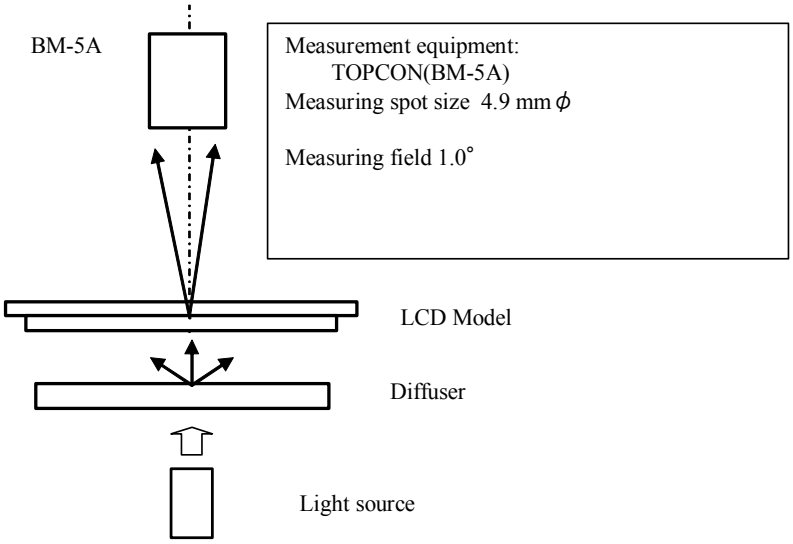

Fig. 3 Optical characteristics Test Method (Brightness)

Note 3) Contrast ratio is defined as follows:

$$Co = \frac{\text{Luminance(brightness) all pixcels "White"}}{\text{Luminance(brightness) all pixcels "Black"}}$$

Note 4) Response time is defined as follows:

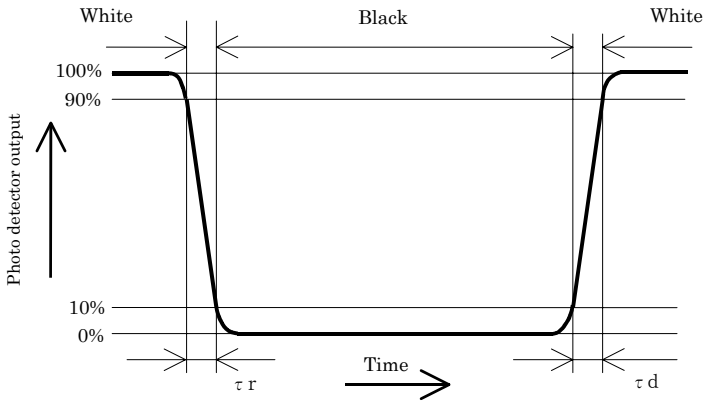

Fig. 4 Response time

Note 5) ILED1～3 =20[mA]

Note 6) Uniformity is defined as follows:

$$\text{Uniformity} = \frac{\text{Minimum Luminance(brightness) in 9 points}}{\text{Maximum Luminance(brightness) in 9 points}}$$

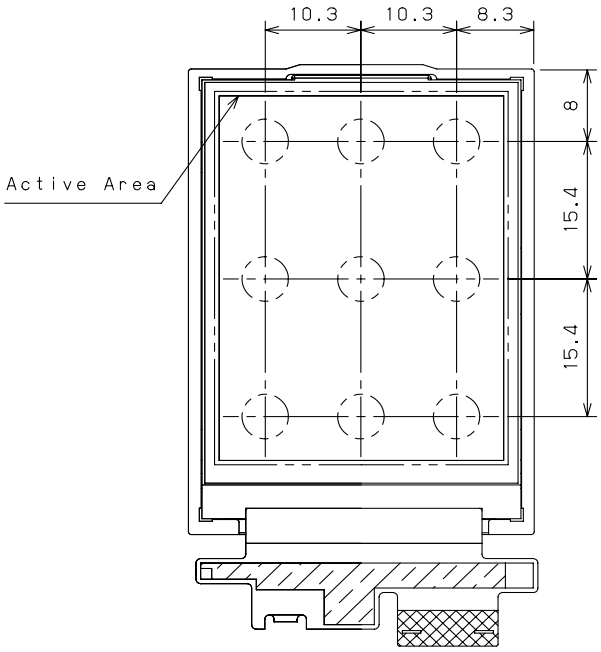

Fig. 5 Measuring Point

7. Reliability △

Table. 8

No.	Test	Condition	Judgment criteria
1	Temperature Cycling	-30℃ → 80℃ → -30℃ … 60min 60min 60min 12cycle	Per table in below
2	High Temp. Storage	Ta=80℃ 96h	Per table in below
3	Low Temp. Storage	Ta=-30℃ 96h	Per table in below
4	Humidity Operation	Ta=60℃ 90%RH,White pattern 96h	Per table in below (polarizer discoloration is excluded)
5	High Temp. Operation	Ta=70℃,White pattern 96h	Per table in below
6	Low Temp. Operation	Ta=-20℃,White pattern 96h	Per table in below
7	Temp. Drift	70℃ → 60℃ → … → -10℃ → -20℃ 1h 1h 1h 1h (10min) (10min) (10min) (10min) 65%RH(Over 10℃), 0%RH(Under 0℃)	Per table in below
8	ESD	Discharge resistance: 0 Ω Discharge capacitor: 200 pF Discharge voltage: ±200 V Max Discharge 1 time to each input line ※ Vss of display module is connected GND of test system ground.	Per table in below

INSPECTION	CRITERION(after test)
Appearance	No Crack on the FPC, on the LCD Panel
Alignment of LCD Panel	No Bubbles in the LCD Panel No other Defects of Alignment in Active area
Electrical current	Within device specifications
Function / Display	No Broken Circuit, No Short Circuit or No Black line No Other Defects of Display

8. Mechanical strength(★1,★2,★3) △1

Table. 9

Mechanical strength	MIN	TYP	MAX	Unit	Remark
3 Point Bending	3.5	–	–	Kgf	Note.1)
COG Constant Pushing	2.0	–	–	Kgf	Note.2)

※Testing condition

・Testing systems: TMD-1kN（MINEBA Co.,Ltd.）

・Temperature = 25℃(±3℃)

・Non operation

・Measured sample : New sample before a long term aging.

★ 1. Mechanical Strength specification shall be out of LG Electronics 's incoming inspection standard and not applicable to AQL.

★ 2. Above specification are meaning of the typical lowest values gotten from actual measurement at sampling test.

★ 3. If there are a lot of samples which doesn't meet the specifications in the standard sampling test , Sharp & LG have discussions how to proceed in each case.

Note.1) 3 Point Bending Test is measured as follows

The strength of 3 Point Bending is defined as the load of Pushing Bar at when LCD glass is broken.

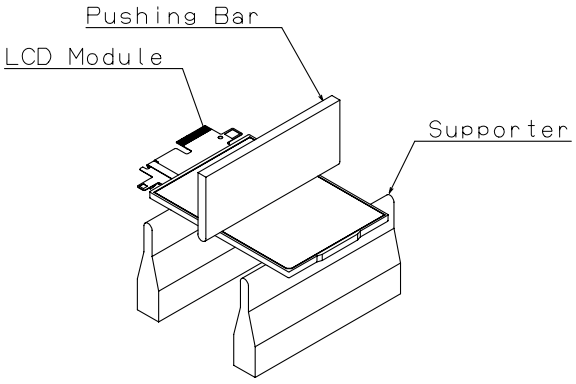

Fig. 6 3Point Bending Test

(Test condition)

Pushing Bar:

Tip shape：Φ3mm（round shape）

Sweep Speed：3mm/min

Material：Aluminum or Steel

Position： Fig. 7

Supporter

Tip shape：Φ3mm(round shape)

Pitch：36mm

Material：Aluminum or Steel

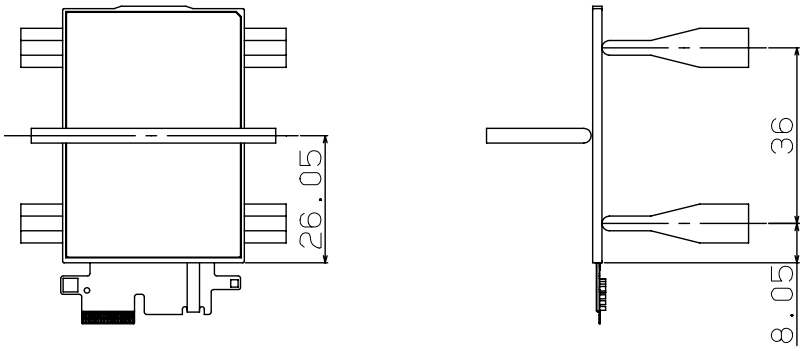

Fig. 7 Test Position

Note.2) COG Constant Pushing Test is measured as follows

The strength of COG Constant Pushing is defined as the load of Pushing Rod at when LCD glass or driver IC is broken.

(Test condition)

Pushing Rod:

Tip diameter: Φ3mm (flat shape)

Sweep Speed: 3mm/min

Material: Aluminum or Steel

Position: Fig. 9

Supporter

Tip shape: Φ3mm

Pitch: 36mm

Material: Aluminum or Steel

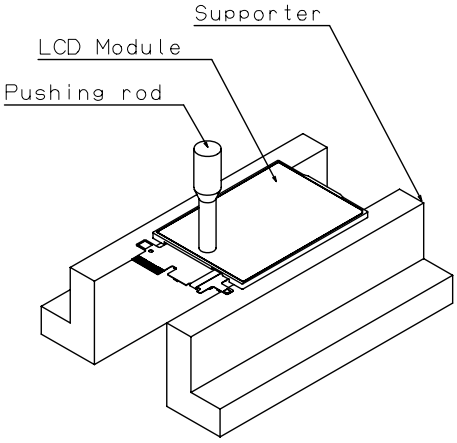

Fig. 8 COG Constant Pushing Test

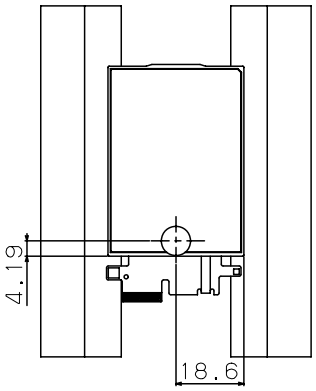

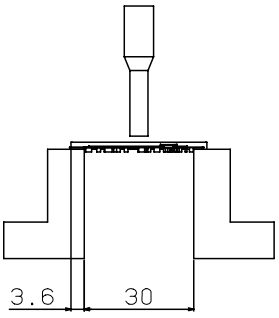

Fig. 9 Test Position

9. Packaging specifications

(9-1) Details of packaging

1) Packaging materials: Table.11

2) Packaging style : Fig. 10, 11

(9-2) Reliability

1) Vibration test

Table.10

Item	Test			
Frequency	5 Hz to 50 Hz (3 minutes cycle)			
Direction	Up-Down, Left-Right, Front-Back (3 directions)			
Period	Up-Down	Left-Right	Front-Back	Total
	60min	15min	15min	90min

The frequency should start at 5 Hz and vary continuously.

Total amplitude	20mm	0.2mm	20mm	0.2mm	
Frequency	5 Hz	50 Hz	5 Hz	50 Hz	(For 9.8m/s^2)

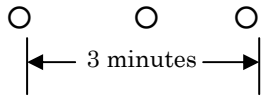

2) Drop test

Drop height: 750mm

Number of drop: 10 times (Drop sequence: 1 corner, 3 edges, 6 faces)

(9-3) Packaging quantities

500 modules (max) per master carton

(9-4) Packaging weight

7.6kg

(9-5) Packaging outline dimensions

360 mm × 525 mm × 225 mm (H)

(Packaging materials) Table.11

	Parts name	Materials
1	Master carton	Corrugate card board
2	Under pad	Corrugate card board
3	Inside sleeve	Corrugate card board
4	Outside sleeve	Corrugate card board
5	Tray for packaging	Polystyrene with anti-static treatment + anti-static polystyrene
6	Protective bag	Polyethylene with anti-static treatment
7	OPP tape	Polypropylene
8	Bar code label	Anti-static polyethylene

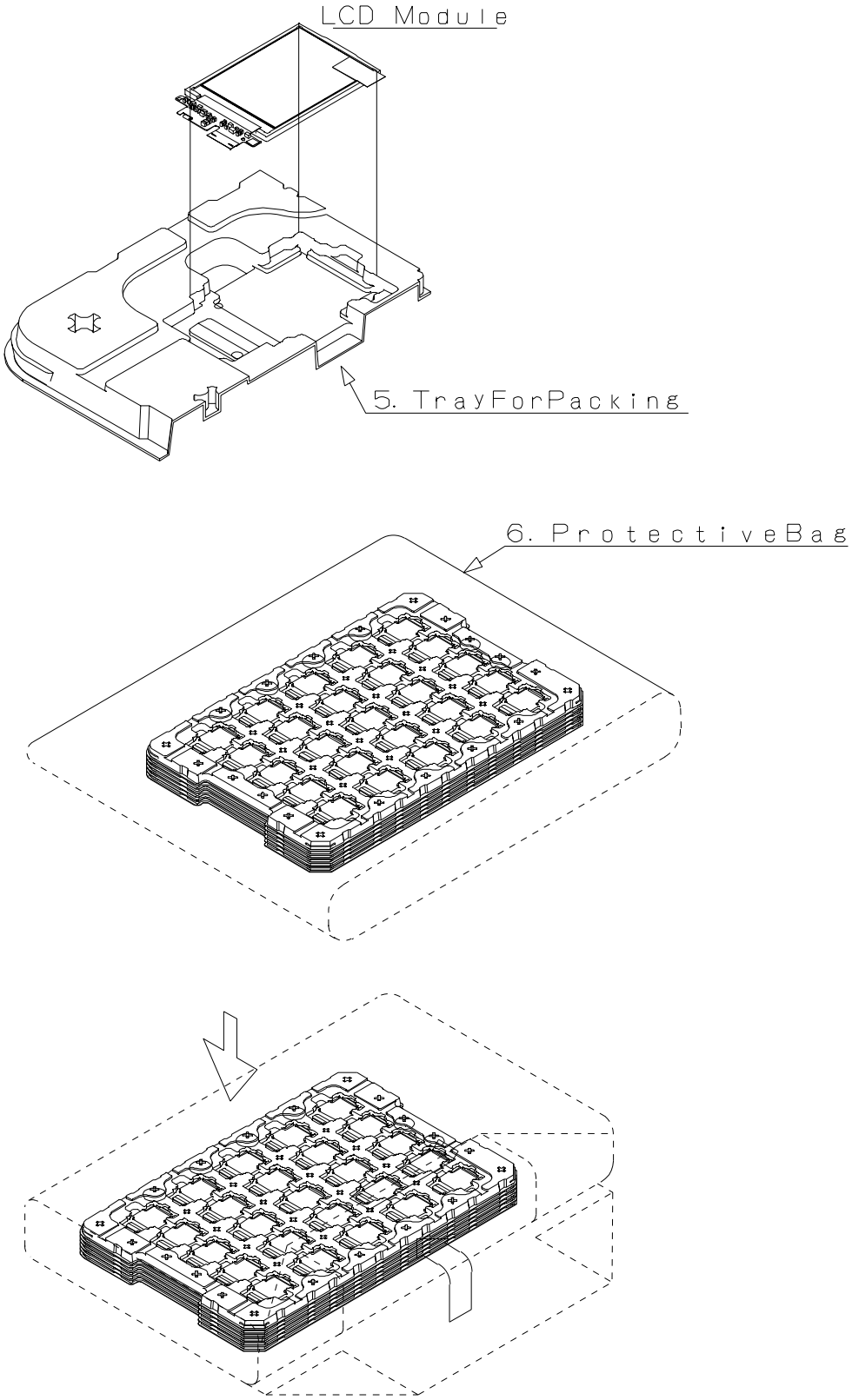

Fig.10 Packaging style (Tray for packaging)

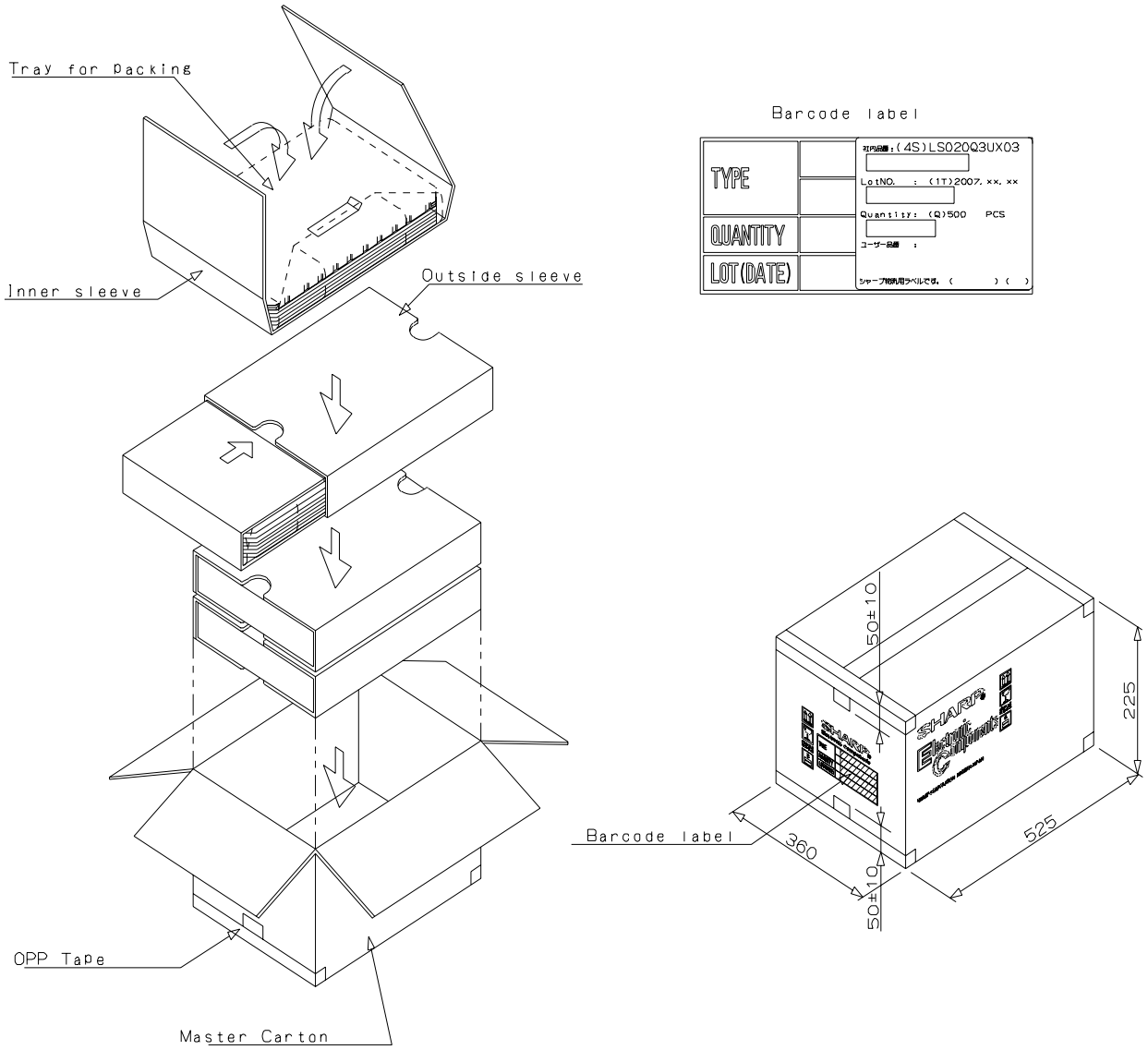

Fig. 11 Packaging style (Master carton for packaging)

10. Initial Sequence

【Power ON Sequence】(In case of 16bit 1 time transfer) △1

	Item	RS	index/data	hex
	Initial condition (DB0-15,RS,CSB,WRD,RDB,RESETB="L")			
	VDDIO ON			
	VDD ON			
	WAIT min. 1ms			
	Fix logic initial voltage level			
	Reset release (RESETB=H)			
	WAIT min. 10ms			
△1	Deep stand by release 1	L	I	0000h
	WAIT min. 3 ms			
	Deep stand by release 2	L	I	0000h
	WAIT min. 3 ms			
	Deep stand by release 3	L	I	0000h
	WAIT min. 3 ms			
	The on-chip CR oscillator operation starts	L	I	0000h
		H	D	0001h
	WAIT min. 5ms			
	Panel output control	L	I	0100h
		H	D	0000h
	WAIT min. 1us			
	Manual sequence enable	L	I	0101h
		H	D	0000h
	VGM setting	L	I	0102h
		H	D	000Ah
	XVDD setting	L	I	0103h
	The booster clock mode of AVDD and XVDD is Dual mode	H	D	0006h
	Boosting step setting	L	I	0104h
		H	D	0000h
	Boosting clock of AVDD and XVDD	L	I	0105h
		H	D	0035h
△1	VCS1 setting	L	I	0107h
		H	D	003Bh
	Set Source Driver output Direction	L	I	0001h
	(From OUT120 to OUT1)	H	D	0127h
	STV=1H, Precharge "ON", RGB out put order is normal.	L	I	0002h
		H	D	1210h
	Display colors mode	L	I	0007h
	(In case of 16bit color)	H	D	8030h
	(In case of 18bit color)			4030h
△1	Transfer mode	L	I	0003h
	(In case of 16bit 1 time transfer)	H	D	0030h
	Set Front Porch =56, Back Porch=8	L	I	0008h
		H	D	3808h
	Set the number of clocks in 1H.	L	I	000Dh
		H	D	0002h
	Panel control setting	L	I	0012h

NEXT Page

	H	D	0402h
Panel control setting	L	I	0014h
	H	D	0001h
Panel control setting	L	I	0015h
	H	D	6300h
Panel control setting	L	I	001Ch
	H	D	0000h
Panel control setting	L	I	007Ah
	H	D	0400h
Select Gamma curve2.	L	I	0309h
	H	D	0001h
Set the offset of the VDH/VGS side of positive Gamma.	L	I	030Ah
	H	D	0000h
Set the offset of the VDH/VGS side of negative Gamma.	L	I	030Bh
	H	D	0000h
Panel control setting	L	I	0100h
	H	D	C000h
Panel control setting	L	I	0108h
	H	D	0000h
WAIT min. 16ms			
Panel control setting	L	I	0100h
	H	D	EA00h
Panel control setting	L	I	0108h
	H	D	0001h
WAIT min. 16ms			
Panel control setting	L	I	0100h
	H	D	FA00h
Panel control setting	L	I	0108h
	H	D	0000h
RAM address setting. X increment start address set.	L	I	0200h
	H	D	0000h
RAM address setting. Y increment start address set.	L	I	0201h
	H	D	0000h
RAM data write	L	I	0000h
	L	I	0202h
	H	D	XXXXh
WAIT min. 16ms			
Switch on Gamma gray scale voltage.	L	I	0100h
	H	D	FB0Ah
WAIT min. 32ms			
Source output（Black Display）	L	I	0100h
	H	D	FDEAh
WAIT min. 16ms			
Source output（Normal Display）	L	I	0100h
	H	D	FDFAh
WAIT min. 16ms			

【Power OFF Sequence】

Item	RS	index/data	hex
Source output (Black Display)	L	I	0100h
	H	D	FDEAh
WAIT min. 16ms			
Panel control setting (Display OFF)	L	I	0100h
	H	D	FCC8h
WAIT min. 32ms			
Panel control setting	L	I	0100h
	H	D	C000h
Panel control setting	L	I	0108h
	H	D	0002h
WAIT min. 16ms			
Sleep mode	L	I	0100h
	H	D	0000h
Panel control setting	L	I	0108h
	H	D	0000h
Deep standby	L	I	001Dh
	H	D	0000h
WAIT min. 300ms			
VDD OFF			
VDDIO OFF			
RESET = ″L″			

11. Parts List

PARTS CODE	SPECIFICATION	SIZE	VENDOR
LCD	240xRGBX320	2.0"	SHARP
Polarizer	-	-	NITTO
Driver LSI	JBT6K85-32AS(EZ,S)		TOSHIBA
Back Light	-	-	Nihon Lights
FPC	2layer Cu/PI/Cu		Sony Chemical
LED1~3	GM4BW63374A		SHARP
C2	0.01uF/25V	1005	MULTI
C3	4.7uF/6.3V	1608	MULTI
C4	4.7uF/6.3V	1608	MULTI
C6	1.0uF/6.3V	1005	MULTI
C7	1.0uF/6.3V	1005	MULTI
C8	4.7uF/6.3V	1608	MULTI
C9	1.0uF/6.3V	1005	MULTI
C10	1.0uF/6.3V	1005	MULTI
C11	2.2uF/10V	1608	MULTI
C12	4.7uF/6.3V	1608	MULTI
C13	2.2uF/10V	1608	MULTI
C14	0.1uF/10V	1005	MULTI
C15	1.0uF/10V	1005	MULTI
C16	1.0uF/10V	1005	MULTI
C17	1.0uF/10V	1005	MULTI
C18	1.0uF/10V	1005	MULTI
C19	2.2uF/10V	1608	MULTI
C20	2.2uF/16V	2125	MULTI
C21	2.2uF/10V	1608	MULTI
C23	1.0uF/6.3V	1005	MULTI
C24	2.2uF/6.3V	1608	MULTI
C25	0.1uF/16V	1005	MULTI
C26	0.1uF/16V	1005	MULTI
C27	0.1uF/16V	1005	MULTI
R1	3kohm/D	1005	MULTI
R2	20kohm/D	1005	MULTI
R3	30kohm/D	1005	MULTI

FPC Work Layer 1

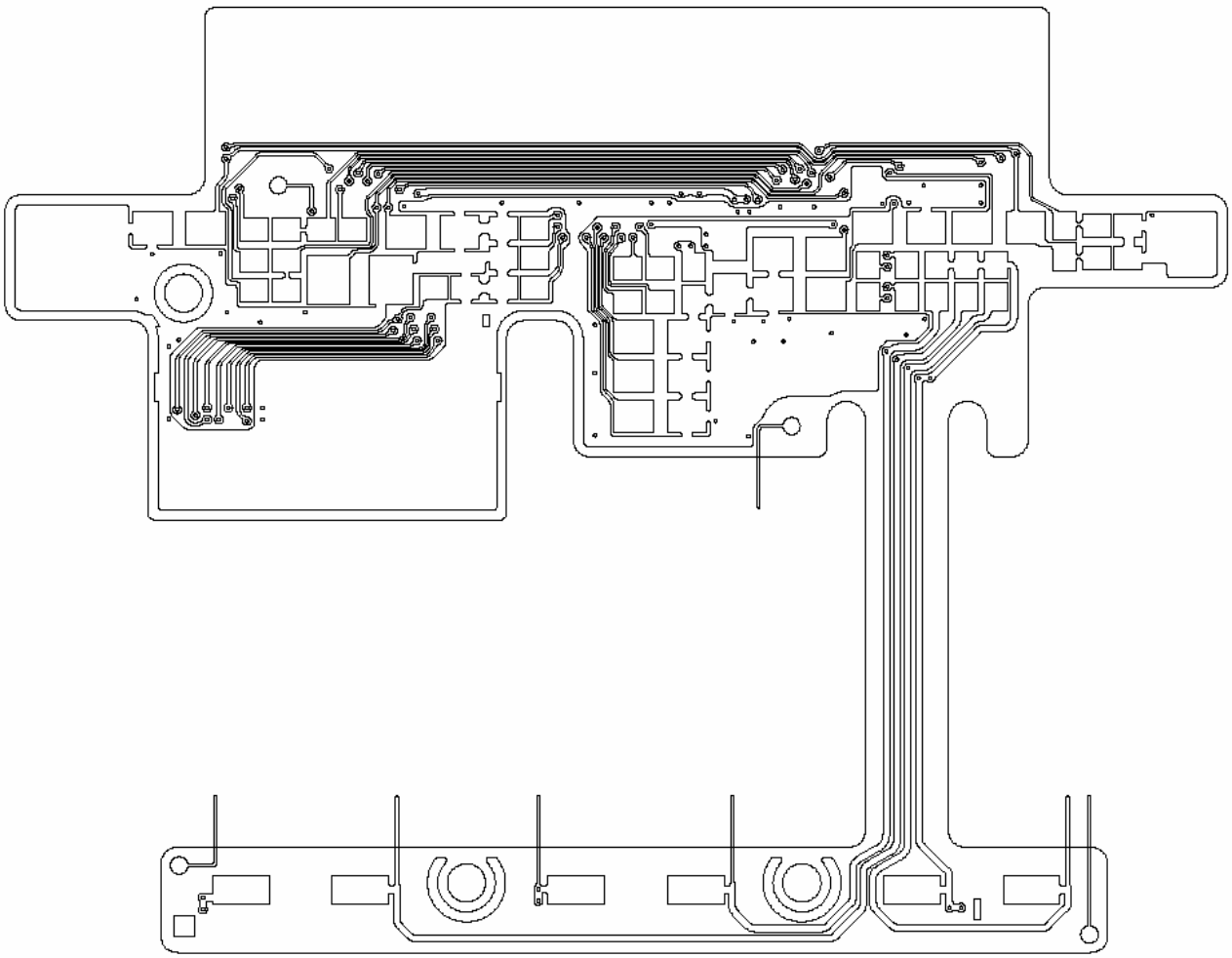

FPC Work Layer 2

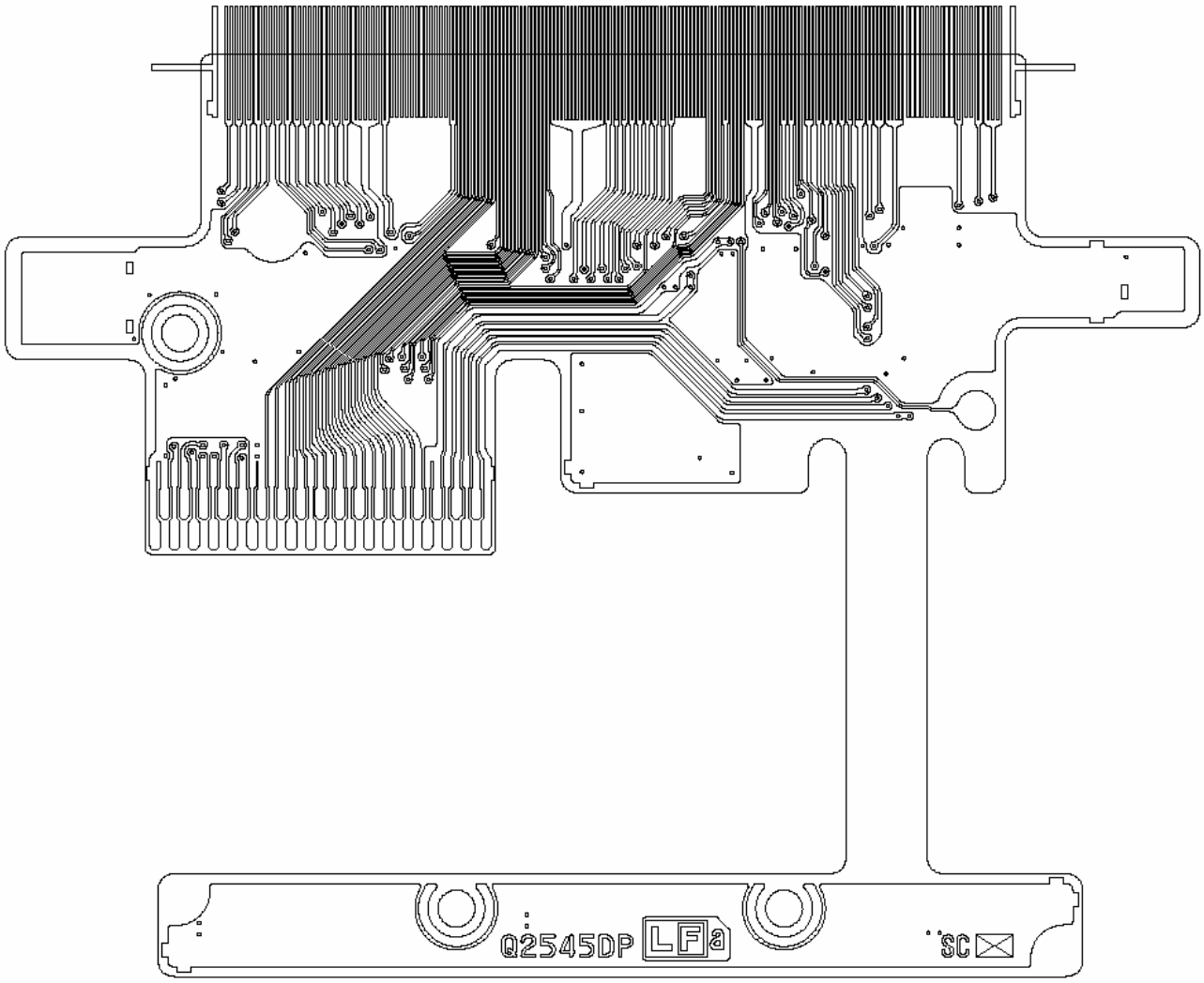

Parts Layout of FPC

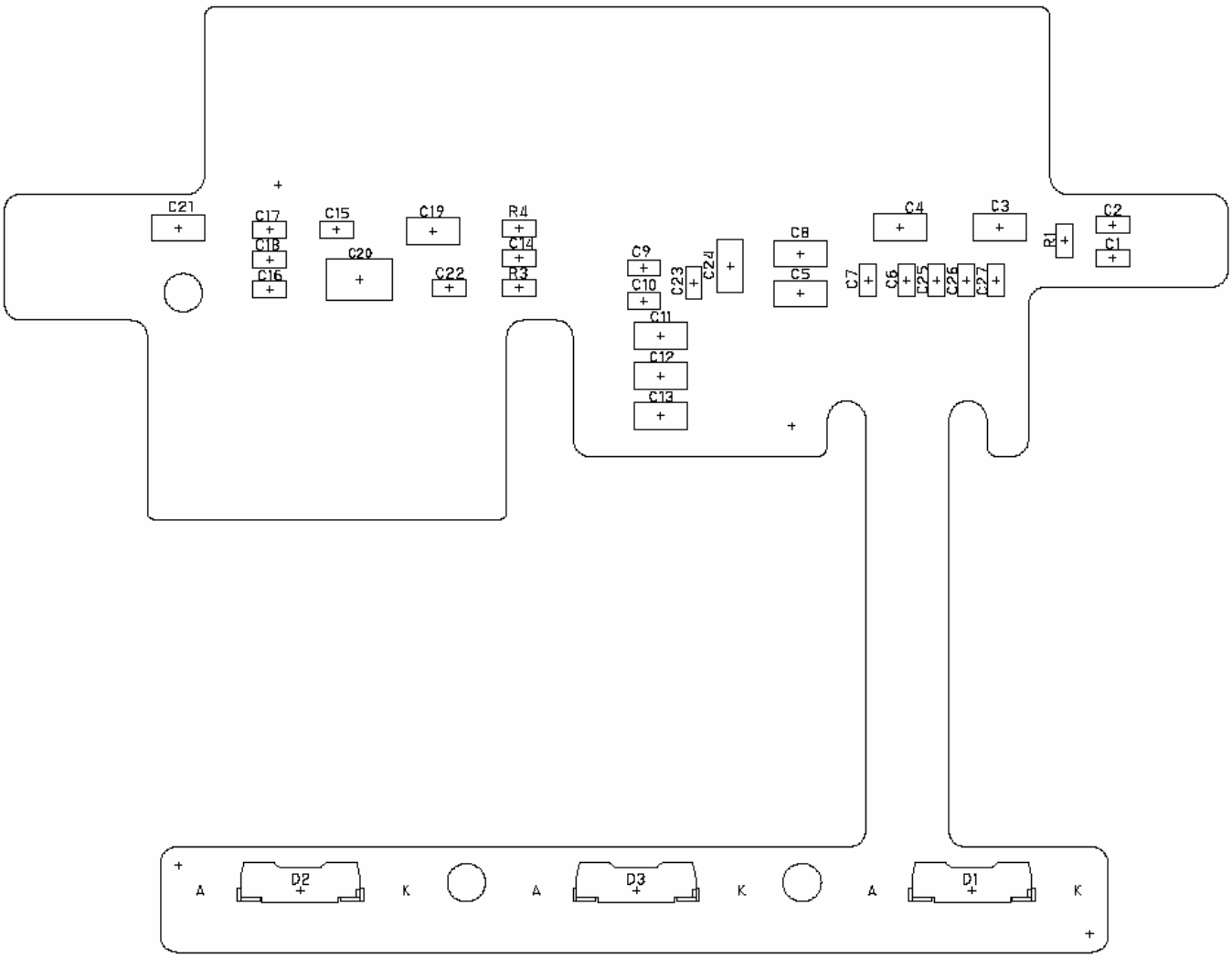

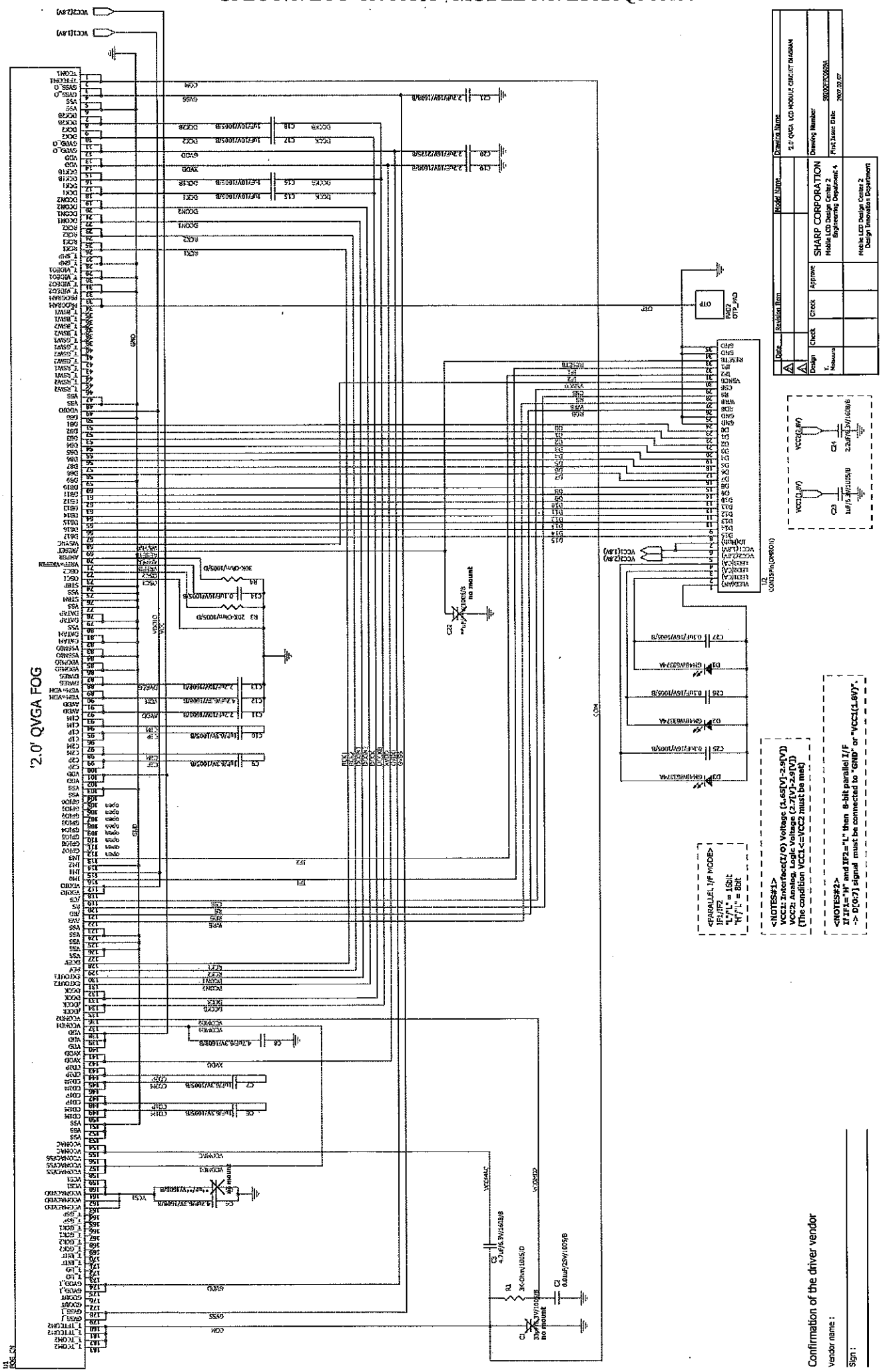

<PARALLEL I/F MODE>
IF1/IF2
"L"/"L" = 16bit
"H"/"L" = 8bit

<NOTES#1>
VCC1: Interface(I/O) Voltage (1.65[V]-2.9[V])
VCC2: Analog, Logic Voltage (2.7[V]-2.9[V])
(The condition VCC1<=VCC2 must be met)

<NOTES#2>
If IF1="H" and IF2="L" then 8-bit parallel I/F
-> D[0:7] signal must be connected to "GND" or "VCC1(1.8V)".

Date	Revision Item	Model Name	Drawing Name
			'2.0' QVGA LCD MODULE CIRCUIT DIAGRAM

Design	Check	Check	Approve	SHARP CORPORATION Mobile LCD Design Center 2 Engineering Department 4	Drawing Number S020QFK060A	First Issue Date 2007.02.07
Y. Matsuura				Mobile LCD Design Center 2 Design Innovation Department		

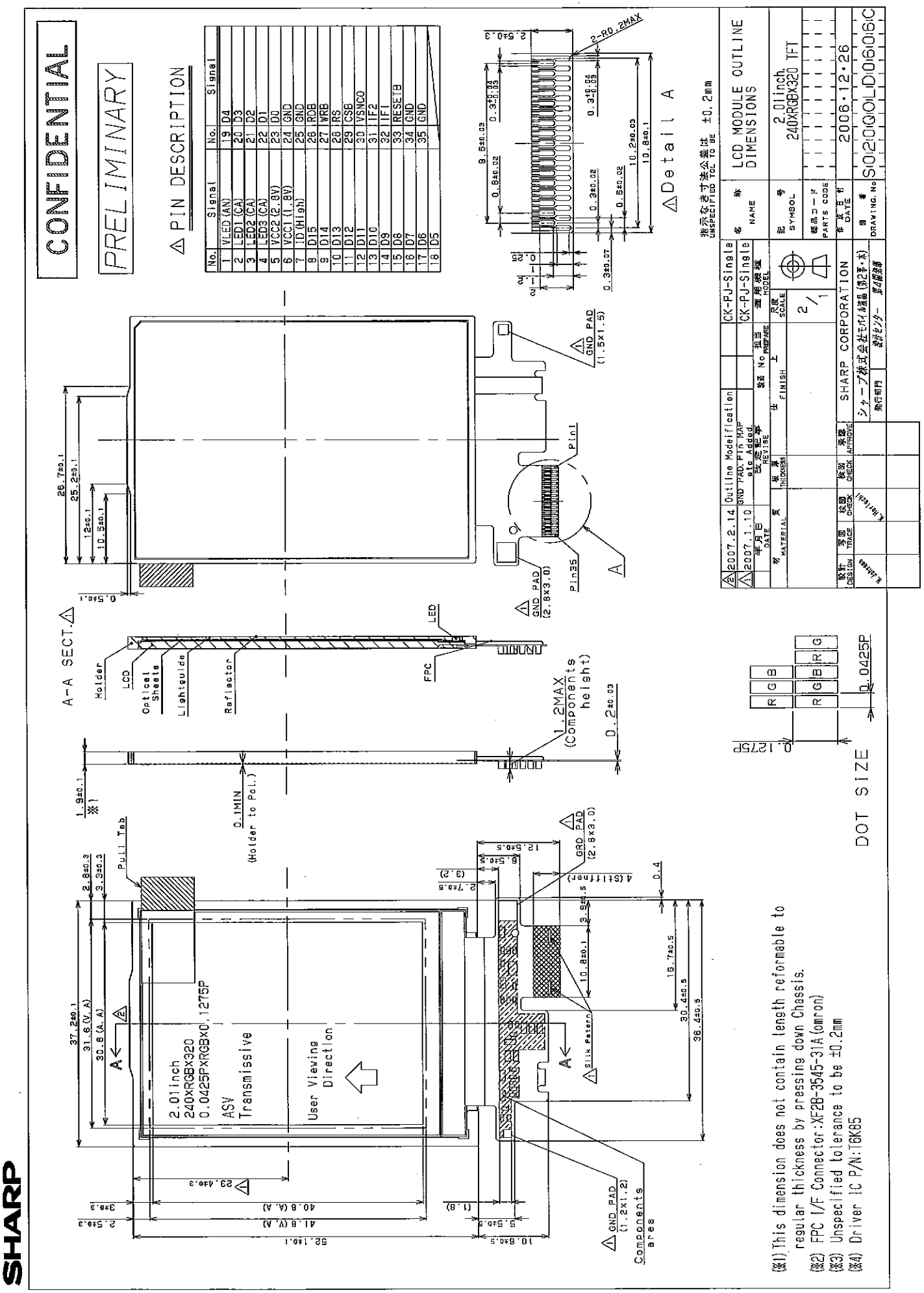

(※1) This dimension does not contain length reformable to regular thickness by pressing down Chassis.
(※2) FPC I/F Connector:XF2B-3545-31A(omron)
(※3) Unspecified tolerance to be ±0.2mm
(※4) Driver IC P/N:TGK65

11. Serial Number Label identification

Numbering is specified as follows.

7 E 000001 Q

① ② ③ ④

① product year (lower 1 digits)

7: 2007

8: 2008

② product month

A: January

B: February

C: March

:

L: December

③ serial number

000001 ～ 999999

④ factory code

12. LCD Module Code Rule.

LS 020 Q 3 U X 03

① ② ③ ④ ⑤ ⑥ ⑦

①Parts type

CGS LCD

②Active area size

2.0inch

③Dot format

QVGA format

④LCD type

Transmissive

⑤Interface type

CPU interface

⑥Polarizer / LCD viewing type

Clear type / Wide viewing angle

⑦Serial Code