PREPARED BY: DATE	SHARP	SPEC No. LCY-1209303D
		FILE No.
APPROVED BY: DATE	MOBILE LIQUID CRYSTAL DISPLAY GROUP SHARP CORPORATION	ISSUE 14.Jul.2009
		PAGE 32 Pages
		APPLICABLE DIVISION DEVELOPMENT DEPERTMENT LCD DIVISION I MOBILE LIQUID CRYSTAL DISPLAY GROUP SHARP CORPORATION
	SPECIFICATION	

DEVICE SPECIFICATION for

CGS Color LCD Module

(480 × RGB × 800 dots)

Model No.

LS030Y3DX01

☐ CUSTOMER'S APPROVALDATE

DATE _____

BY _____

PRESENTED BY For K. Horiuchi

Fumio Kinoshita
DEPARTMENT GENERAL MANAGER
DEVELOPMENT DEPERTMENT
LCD DIVISION I
MOBILE LIQUID CRYSTAL DISPLAY GROUP
SHARP CORPORATION

RECORDS OF REVISION				DOC. First issue	12. Mar 2009
				Model No.	LS030Y3DX01
				Spec. No.	LCY-1209303D
DATE	REF.PAGE PARAGRAPH DRAWING No.	REVISED NO.	SUMMARY		
2009/04/07	P.22	A	"H/F" mark is added in Barcode Label		
	P.32		Figure of Module outline is revised		
2009/06/12	P.26, P27	B	FPC art work(Layer1 and 2) is revised		
	P.23, P24		INITIAL SEQUENCE is revised		
	P.29		FPC parts layout of Layer2 is revised		
	P.31		Serial Number Label identification is revised		
2009/06/19	P.25	C	Parts List is revised (R1,R2 addition)		
	P.32		Part Layout of Layer2 (Error correction)		
	P.32		Fig17 is revised		
2009/07/13	P.20	D	Packaging Quantities is fixed		
	P.22		The Figure of Master Carton is revised		
	P.22		'P' Mark in Barcode Label is added		
	P.25		Parts List is revised(R2 Delete)		
	P.26		FPC art work (Layer1) is revised		
	P.27		FPC art work (Layer2) is revised		
	P.29		FPC part layout (Layer2) is revised		
	P.30		Circuit diagram is revised		
	P.32		Figure of Module Outline is revised		

NOTICE

○ These specification sheets are the proprietary product of SHARP CORPORATION (SHARP) and include materials protected under copyright of SHARP. Do not reproduce or cause any third party to reproduce them in any form or by any means, electronic or mechanical, for any purpose, in whole or in part, without the express written permission of SHARP.

○ The application examples in these specification sheets are provided to explain the representative applications of the device and are not intended to guarantee any industrial property right or other rights or license you to use them. SHARP assumes no responsibility for any problems related to any industrial property right of a third party resulting from the use of the device.

○ The device listed in these specification sheets was designed and manufactured for use in Telecommunication equipment (terminals)

○ In case of using the device for applications such as control and safety equipment for transportation (aircraft, trains, automobiles, etc.), rescue and security equipment and various safety related equipment which require higher reliability and safety, take into consideration that appropriate measures such as fail-safe functions and redundant system design should be taken.

○ Do not use the device for equipment that requires an extreme level of reliability, such as aerospace applications, telecommunication equipment (trunk lines), nuclear power control equipment and medical or other equipment for life support.

○ SHARP assumes no responsibility for any damage resulting from the use of the device which does not comply with the
instructions and the precautions specified in these specification sheets.

○ Contact and consult with a SHARP sales representative for any questions about this device.

[For handling and system design]

(1) Do not scratch the surface of the polarizer film as it is easily damaged.

(2) If the cleaning of the surface of the LCD panel is necessary, wipe it swiftly with cotton or other soft cloth. Do not use organic solvent as it damages polarizer.

(3) Water droplets on polarizer must be wiped off immediately as they may cause color changes, or other defects if remained for a long time.

(4) Since this LCD panel is made of glass, dropping the module or banging it against hard objects may cause cracks or fragmentation.

(5) Certain materials such as epoxy resin (amine's hardener) or silicone adhesive agent (de-alcohol or de-oxym) emits gas to which polarizer reacts (color change). Check carefully that gas from materials used in system housing or packaging do not hart polarizer.

(6) Liquid crystal material will freeze below specified storage temperature range and it will not get back to normal quality even after temperature comes back within specified temperature range. Liquid crystal material will become isotropic above specified temperature range and may not get back to normal quality. Keep the LCD module always within specified temperature range.

(7) Do not expose LCD module to the direct sunlight or to strong ultraviolet light for long time.

(8) If the LCD driver IC (COG) is exposed to light, normal operation may be impeded. It is necessary to design so that the light is shut off when the LCD module is mounted.

(9) Do not disassemble the LCD module as it may cause permanent damage.

(10) As this LCD module contains components sensitive to electrostatic discharge, be sure to follow the instructions in below.

① Operators
Operators must wear anti-static wears to prevent electrostatic charge up to and discharge from human body.

② Equipment and containers
Process equipment such as conveyer, soldering iron, working bench and containers may possibly generate electrostatic charge up and discharge. Equipment must be grounded through 100Mohms resistance. Use ion blower.

③ Floor
Floor is an important part to leak static electricity which is generated from human body or equipment.
There is a possibility that the static electricity is charged to them without leakage in case of insulating floor, so the countermeasure (electrostatic earth:$1\times10^{8}\Omega$) should be made.

④Humidity
Proper humidity of working room may reduce the risk of electrostatic charge up and discharge. Humidity should be kept over 50% all the time.

⑤Transportation/storage
Storage materials must be anti-static to prevent causing electrostatic discharge.

⑥Others
Protective film is attached on the surface of LCD panel to prevent scratches or other damages. When removing this protective film, remove it slowly under proper anti-ESD control such as ion blower.

(11) Hold LCD very carefully when placing LCD module into the system housing. Do not apply excessive stress or pressure to LCD module. Do not to use chloroprene rubber as it may affect on the reliability of the electrical interconnection.

(12) Do not hold or touch LCD panel to flex interconnection area as it may be damaged.

(13) As the binding material between LCD panel and flex connector mentioned in 12) contains an organic material, any type of organic solvents are not allowed to be used. Direct contact by fingers is also prohibited.

(14) When carrying the LCD module, place it on the tray to protect from mechanical damage. It is recommended to use the conductive trays to protect the CMOS components from electrostatic discharge. When holding the module, hold the Plastic Frame of LCD module so that the panel, COG and other electric parts are not damaged.

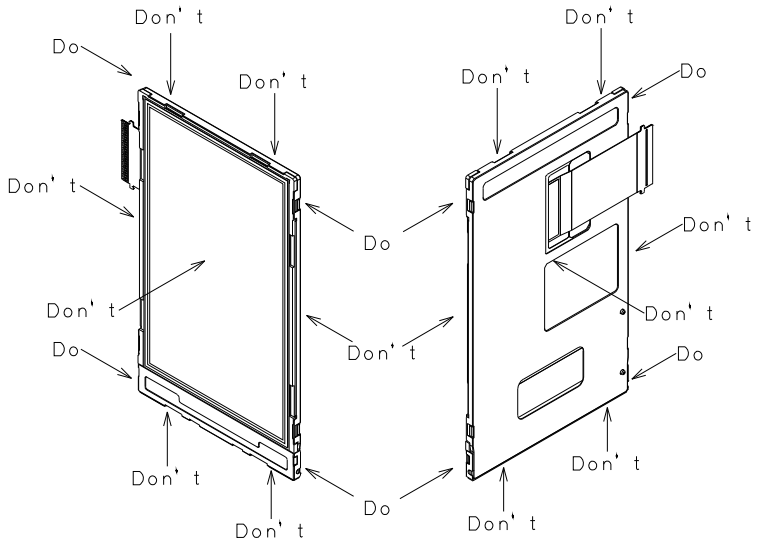

(15) Do not touch the COG's patterning area. Otherwise the circuit may be damaged.

(16) Do not touch LSI chips as it may cause a trouble in the inner lead connection.

(17) Place a protective cover on the LCD module to protect the glass panel from mechanical damages.

(18) LCD panel is susceptible to mechanical stress and even the slightest stress will cause a color change in background. So make sure the LCD panel is placed on flat plane without any continuous twisting, bending or pushing stress.

(19) Protective film is placed onto the surface of LCD panel when it is shipped from factory. Make sure to peel it off before assembling the LCD module into the system. Be very careful not to damage LCD module by electrostatic discharge when peeling off this protective film. Ion blower and ground strap are recommended.

(20) Make sure the mechanical design of the system in which the LCD module will be assembled matches specified viewing angle of this LCD module.

(21) This LCD module does not contain nor use any ODS (1,1,1-Trichloroethane, CCL4) in all materials used, in all production processes.

[For operating LCD module]

(1) Do not operate or store the LCD module under outside of specified environmental conditions.
(2) At the shipment, adjust the contrast of each LCD module with electric volume. LCD contrast may vary from panel to panel depending on variation of LCD power voltage from system.
(3) As opt-electrical characteristics of LCD will be changed, dependent on the temperature, the confirmation of display quality and characteristics has to be done after temperature is set at 25 °C and it becomes stable.

[Precautions for Storage]

(1) Do not expose the LCD module to direct sunlight or strong ultraviolet light for long periods. Store in a dark place.
(2) The liquid crystal material will solidify if stored below the rated storage temperature and will become an isotropic liquid if stored above the rated storage temperature, and may not retain its original properties. Only store the module at normal temperature and humidity (25±5°C, 60±10%RH) in order to avoid exposing the front polarizer to chronic humidity.
(3) Keeping Method
a. Don't keeping under the direct sunlight. b. Keeping in the tray under the dark place.

DON'T DO

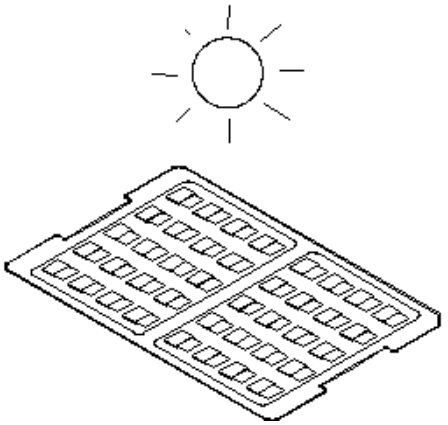

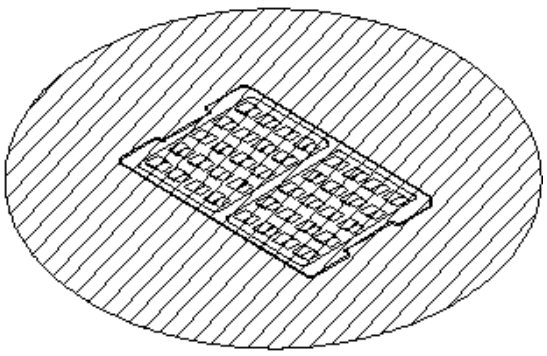

(1) Do not operate or store the LCD module under outside of specified environmental conditions.
(2) Be sure to prevent light striking the chip surface.

[Other Notice]

(1) Do not operate or store the LCD module under outside of specified environmental conditions.

(2) As electrical impedance of power supply lines (VCC-GND) are low when LCD module is working, place the de-coupling capacitor near by LCD module as close as possible.

(3) Reset signal must be sent after power on to initialize LSI. LSI does not function properly until initialize it by reset signal.

(4) Generally, at power on, in order not to apply DC charge directly to LCD panel, supply logic voltage first and initialize LSI logic function including polarity alternation. Then supply voltage for LCD bias. At power off, in order not to apply DC charge directly to LCD panel, execute Power OFF sequence and Discharge command.

(5) Don't touch to FPC surface, exposed IC chip, electric parts and other parts, to any electric, metallic materials.

(6) No bromide specific fire-retardant material is used in this module.

(7) Do not display still picture on the display over 2 hours as this will damage the liquid crystal.

(8) The connector used in this LCD module is the one Sharp have not ever used.
Therefore, please note that the quality of this connector concerned is out of Sharp's guarantee.

[Precautions for Discarding Liquid Crystal Modules]

COG: After removing the LSI from the liquid crystal panel, dispose of it in a similar way to circuit boards from electronic devices.
LCD panel: Dispose of as glass waste. This LCD module contains no harmful substances. The liquid crystal panel contains no dangerous or harmful substances. The liquid crystal panel only contains an extremely small amount of liquid crystal (approx.100mg) and therefore it will not leak even if the panel should break.
-Its median lethal dose (LD50) is greater than 2,000 mg/kg and a mutagenetic (Aims test: negative) material is employed.
FPC: Dispose of as similar way to circuit board from electric device.

1. Application

This data sheet is to introduce the specification of LS030Y3DX01 active matrix 16,777,215color LCD module.
Main color LCD module is controlled by Driver IC (R63302).
If any problem occurs concerning the items not stated in this specification, it must be solved sincerely by both parties after deliberation.
As to basic specification of driver IC refer to the IC specification and handbook.

2. Construction and Outline

Construction: LCD panel, Driver (COG), FPC with electric components,
6 White LED lump, prism sheet, diffuser, light guide and reflector, plastic frame and metal frame to fix them mechanically.
Outline: See page 32
Connection: ZIF connector (Kyocera ELCO, 04-6293-049-001-829+, 49 pins, 0.3mm pitch)
There shall be no scratches, stains, chips, distortions and other external drawbacks that may affect the display function.

Rejection criteria shall be noted in Inspection Standard (LDI-MPL-10)

In order to realize thin module structure, double-sided adhesive tapes are used to fix LCD panels. As these tapes do not guarantee to permanently fix the panels, LCD panel may rise from the module when shipped from factory.
So please make sure to design the system to hold the edges of LCD panel by the soft material such as sponge when LCD module is assembled into the cabinet.

3. Mechanical Specification

Table 1

Parameter		Specifications	Unit
Outline dimensions (typ)		45.6(W) × 76.4 (H) × 2.0 (D)	mm
Main LCD Panel	Active area	38.88 (W) × 64.8 (H)	mm
	Viewing area	40.08 (W) × 66.0 (H)	mm
	Display format	480×RGB(W)×800(H)	-
	Dot pitch	0.027 (W) ×0.081 (H)	mm
	Base color *1	Normally Black	-
Mass		Approx 13.3	g

*1 Due to the characteristics of the LC material, the colors vary with environmental temperature.

4. Absolute Maximum Ratings

(4-1) Electrical absolute maximum ratings

Table 2 Ta=25 ℃

Parameter	Symbol	Min	Max	Unit	Remark
Supply voltage	VDDIO-GND	-0.3	4.6	V	*1
	VCC-GND	-0.3	4.6	V	*1
Input Voltage	V_{IN}	-0.3	VDDIO+0.3	V	*2

*1: VCC>=VDDIO

*2: Input terminal of logic system.

Voltage value is based on GND = 0V.

Environment Conditions

Table 3

Item	Top		Tstg		Remark
	MIN.	MAX.	MIN.	MAX.	
Ambient temperature	-20 °C	+70°C	-30 °C	+80°C	Note 2)
Humidity	Note 1)		Note 1)		No condensation

Note1) Ta ≤ 40 °C.....95 % RH Max

Note2) Ta > 40 °C.....Absolute humidity shall be less than Ta=40 °C /95 % RH.

As opt-electrical characteristics of LCD will be changed, dependent on the temperature, the confirmation of display quality and characteristics has to be done after temperature is set at 25 °C and it becomes stable.

Be sure not to exceed the rated voltage, otherwise a malfunction may occur.

5. Electrical Specifications

(5-1) Electrical characteristics

Table 4 Ta=25 ℃, GND=0V, DCLK=26MHz

Parameter	Symbol	Conditions	Min.	Typ.	Max.	Unit	Applicable Pin
Supply voltage	VDDIO-VSS	Ta=-20～70 °C	1.70	2.80	2.90	V	(note 1)
Supply voltage	VCC-VSS	Ta=-20～70 °C	2.70	2.80	2.90	V	
"H" level input voltage	V_{IH1}	Ta=-20～70 °C	0.8 VDDIO	-	-	V	(note 2)
"L" level input voltage	V_{IL1}		-	-	0.2 VDDIO	V	
"H" level output voltage	V_{OH1}	Ta=-20～70 °C	0.8 VDDIO	-	-	V	(note 3)
"L" level output voltage	V_{OL1}	I_{OH1}=-1 mA , I_{OL1} = 1 mA	-	-	0.2 VDDIO	V	
Current consumption	IDD+ICC	Ta=25 °C	-	20.5	30.0	mA	(note 4)

(note 1) The condition VDDIO ≤ VCC must be met
(note 2) Input mode of R0~R7, G0~G7, B0~B7, VSYNC, HSYNC, DCLK, DE, RESET, SDI, SCL, CS
(note 3) Output mode of SDO, LEDPWM.
(note 4) Following Conditions

Ta=25℃, frame frequency=60Hz (DCLK=26MHz)

Display Pattern: All ON (white) Pattern.

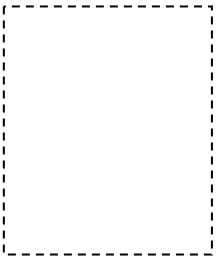

*All ON (white) Pattern

(5-2) LED back light

(1) At main panel the back light uses 6pcs edge light type white LED.

Table 5

Parameter	Conditions	Symbol	Min.	Typ.	Max.	Unit	Remark
Forward current	Ta=25 °C	I_{LED}	-	20 *1	-	mA	LEDA-LEDC

LED lamp: NSSW206T (NICHIA)

([Luminous Intensity rank]: W600~W675 [Color rank]: sbj2/sbk2)

*1 per one piece of LED

*Please consider Allowable Forward Current on used temperature

(refer to Ambient Temperature vs. Allowable Forward Current curve)

Table 6

Absolute Maximum Ratings (Ta=25°C)

Item	Symbol	Absolute Maximum Rating	Unit
Forward Current	I_F	35	mA
Pulse Forward Current	I_{FP}	100	mA
Reverse Voltage	V_R	5	V
Power Dissipation	P_D	119	mW
Operating Temperature	T_{opr}	-30 ~ + 85	°C
Storage Temperature	T_{stg}	-40 ~ +100	°C
Soldering Temperature	T_{sld}	Reflow Soldering : 260°C for 10sec. Hand Soldering : 350°C for 3sec.	

I_{FP} Conditions : Pulse Width ≤ 10msec. and Duty ≤ 1/10

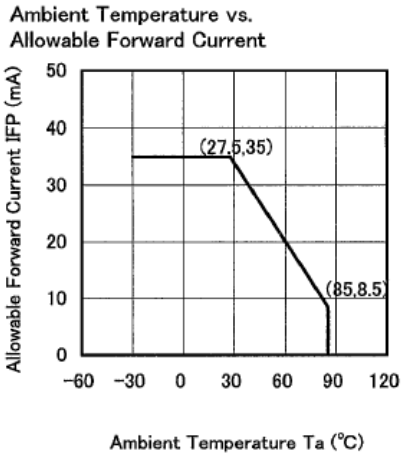

*1 per one piece of

Table 7

Initial Electrical/Optical Characteristics (Ta=25°C)

Item		Symbol	Condition	Typ.	Max.	Unit
Forward Voltage		V_F	I_F=20[mA]	(3.1)	3.4	V
Reverse Current		I_R	V_R= 5[V]	-	50	μA
Luminous Flux		φv	I_F=20[mA]	(6.6)	-	lm
Luminous Intensity		Iv	I_F=20[mA]	(2.4)	-	cd
Chromaticity Coordinate*	x	-	I_F=20[mA]	0.300	-	-
	y	-	I_F=20[mA]	0.295	-	-

* Please refer to CIE 1931 chromaticity diagram.

*1 per one piece of

Table 8

Ranking (Ta=25°C)

Item		Symbol	Condition	Min.	Max.	Unit
Luminous Flux	Rank W700	φv	I_F=20[mA]	7.00	7.25	lm
	Rank W675			6.75	7.00	
	Rank W650			6.50	6.75	
	Rank W625			6.25	6.50	
	Rank W600			6.00	6.25	

* Luminous Flux Measurement allowance is ± 7%.

Table 9

Color Ranks (I_F=20mA,Ta=25°C)

	Rank Sbj2			
x	0.296	0.291	0.299	0.304
y	0.276	0.287	0.301	0.290

	Rank Sbk2			
x	0.304	0.299	0.307	0.312
y	0.290	0.301	0.315	0.304

* Color Coordinates Measurement allowance is ± 0.005.

* Basically, a shipment shall consist of the LEDs of a combination of the above ranks. The percentage of each rank in the shipment shall be determined by Nichia.

(5-3) Interface signals

Table 10

Pin No	Symbol	Description	I/O	Remarks
1	LED A	LED Anode	-	
2	LED A	LED Anode	-	
3	LED C1	LED Cathode 1	-	
4	LED C2	LED Cathode 2	-	
5	LED C3	LED Cathode 3	-	
6	LED C4	LED Cathode 4	-	
7	LED C5	LED Cathode 5	-	
8	LED C6	LED Cathode 6	-	
9	LEDPWM	Control signal for LED backlight	O	PWM signal's width is selected from 256 values
10	RESET	Reset enable pin	I	Low(GND) enable
11	MAKER ID (High)	Through a 10K ohm resistor connected to VDDIO	-	
12	GND	GND level pin	-	
13	VSYNC	Frame synchronous signal in RGB I/F	I	
14	HSYNC	Line synchronous signal in RGB I/F	I	
15	DOTCLK	Dot clock signal in RGB I/F	I	
16	ENABLE	Data enable signal in RGB I/F	I	
17	R7	Data signal in RGB I/F (RED)	I	
18	R6	Data signal in RGB I/F (RED)	I	
19	R5	Data signal in RGB I/F (RED)	I	
20	R4	Data signal in RGB I/F (RED)	I	
21	R3	Data signal in RGB I/F (RED)	I	
22	R2	Data signal in RGB I/F (RED)	I	
23	R1	Data signal in RGB I/F (RED)	I	
24	R0	Data signal in RGB I/F (RED)	I	
25	G7	Data signal in RGB I/F (GREEN)	I	
26	G6	Data signal in RGB I/F (GREEN)	I	
27	G5	Data signal in RGB I/F (GREEN)	I	
28	G4	Data signal in RGB I/F (GREEN)	I	
29	G3	Data signal in RGB I/F (GREEN)	I	
30	G2	Data signal in RGB I/F (GREEN)	I	
31	G1	Data signal in RGB I/F (GREEN)	I	
32	G0	Data signal in RGB I/F (GREEN)	I	
33	B7	Data signal in RGB I/F (BLUE)	I	
34	B6	Data signal in RGB I/F (BLUE)	I	
35	B5	Data signal in RGB I/F (BLUE)	I	
36	B4	Data signal in RGB I/F (BLUE)	I	
37	B3	Data signal in RGB I/F (BLUE)	I	
38	B2	Data signal in RGB I/F (BLUE)	I	
39	B1	Data signal in RGB I/F (BLUE)	I	
40	B0	Data signal in RGB I/F (BLUE)	I	
41	SDI	Serial data input signal in Serial I/F	I	
42	SCL	Serial clock signal in Serial I/F	I	
43	CS	Chip Select pin in Serial I/F	I	Low(GND) enable
44	SDO	Serial data output signal in Serial I/F	O	
45	GND	GND level pin	-	
46	IOVCC	Power supply for I/O	-	
47	VCC	Power supply for analog and logic	-	
48	VCI	Not used (open)	-	
49	GND	GND level pin	-	

ZIF connector : 04-6293-049-001-829+ (Kyocera ELCO)
Signals connect to LCD module. Symbols correspond able to Circuit diagram in Page 30.

(5-4) Host Interface Timing Diagrams for **serial interface**

Table 11

Condition : GND=0, VDDIO=1.7～2.95V, Ta = 25℃

Item	Symbol		Unit	Test Condition	Min.	Max.
Chip Select Set Up Time	CS	tcss	ns		40	-
Chip Select Hold Time		tcsh	ns		40	-
Chip Select High Pulse Width		tchw	ns		100	
Write Cycle Time	SCL (Write)	twc	ns		100	-
SCL"High"Width(Write)		twrh	ns		40	-
SCL"Low"Width(Write)		twrl	ns		40	-
SCL Set Up Time		tssu	ns		10	
Read Cycle Time	SCL (Read)	trc	ns		300	-
SCL"High"Width (Read)		trdh	ns		120	-
SCL"Low"Width(Read)		trdl	ns		120	-
Data Set Up Time	SDI	tds	ns		30	-
Data Hold Time		tdh	ns		30	-
Access Time	SDO	tacc	ns	CL Max.30pF Min.8pF	-	110
Output Disable Time		tod	ns		10	-
Rising/Falling Time	-	tr/tf	ns		-	15

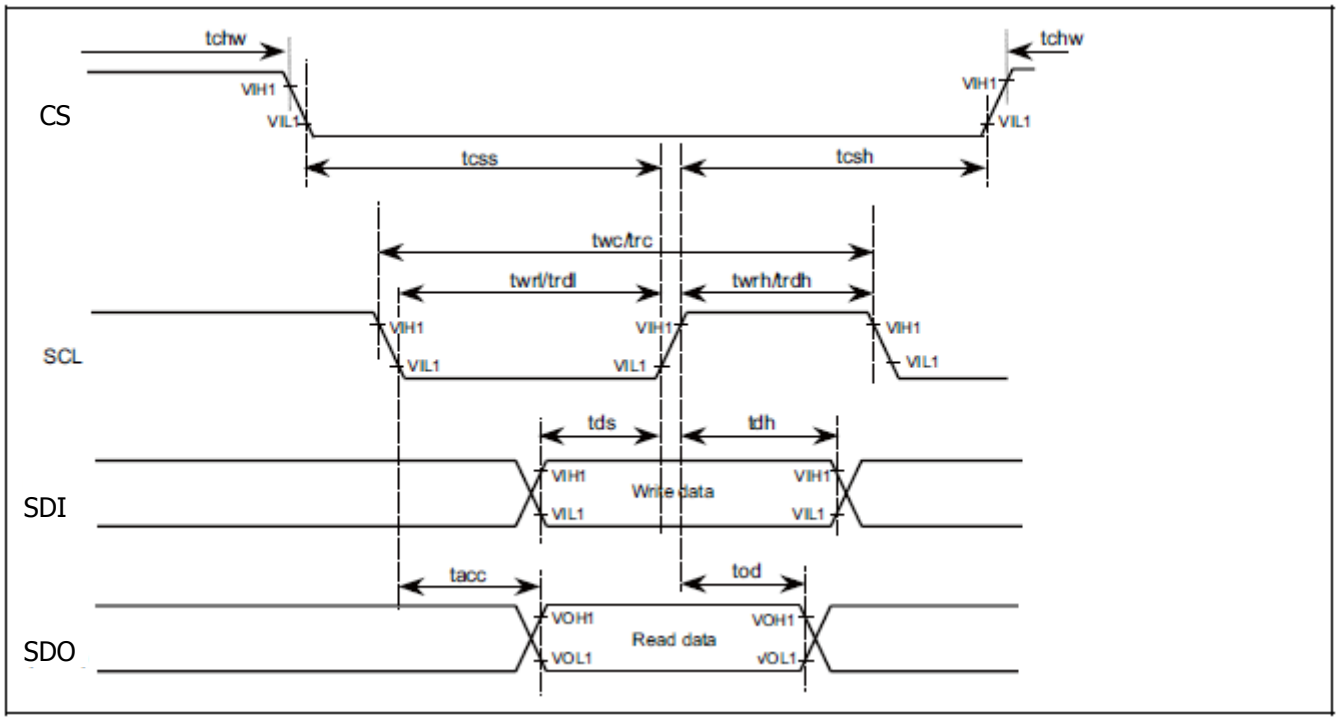

(5-5) Host Interface Timing Diagrams for **RGB interface**

Table 12

Condition : GND=0, VDDIO=1.7～2.95V, Ta = 25℃

Item	Symbol		Unit	Test Condition	Min.	Max.
VSYNC setup time	VSYNC	tyss	ns		10	-
VSYNC hold time		tvsh	ns		15	-
HSYNC setup time	HSYNC	thss	ns		10	-
HSYNC hold time		thsh	ns		15	-
DE setup time	DE	tdes	ns		10	-
DE hold time		tdeh	ns		15	-
Pixel clock cycle time	DCLK	tpclkcyc	ns		31	-
Pixel clock "Low" period		tpclkl	ns		10	-
Pixel clock "High" period		tpclkh	ns		10	-
Data setup time	*1	tds	ns		10	-
Data hold time		tdh	ns		10	-
Rise / Fall time	-	tr/tf	ns		-	5

*1 : R0~R7/G0~G7/B0~B7/DE

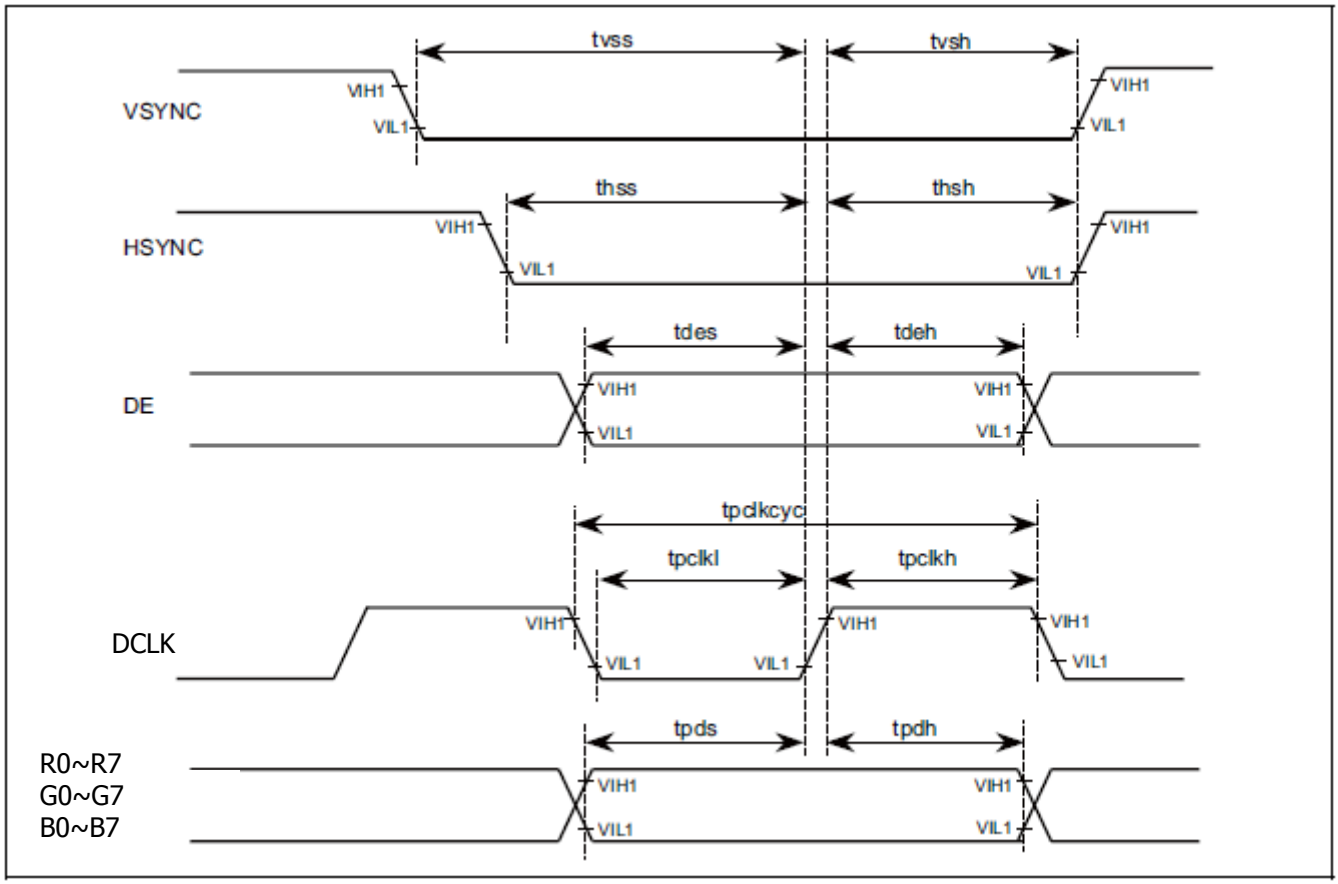

(5-6) Picture data input timing Diagrams for **RGB interface**

Table 13

Item	Symbol	unit	MIN	TYP	MAX
Input dot clock	DCLK	MHz	24.70	26.00	27.30
Horizontal sync period	HSYNC	DCLK	-	536	-
Horizontal sync pulse width	HSP	DCLK	-	16	-
Horizontal back porch	HBP	DCLK	-	24	-
Horizontal front porch	HFP	DCLK	-	16	-
Horizontal active	HACT	DCLK	-	480	-
Vertical sync period	VSYNC	HSYNC	-	808	-
Vertical sync pulse width	VSP	HSYNC	-	2	-
Vertical back porch	VBP	HSYNC	-	2	-
Vertical front porch	VFP	HSYNC	-	4	-
Vertical active	VACT	HSYNC	-	800	-

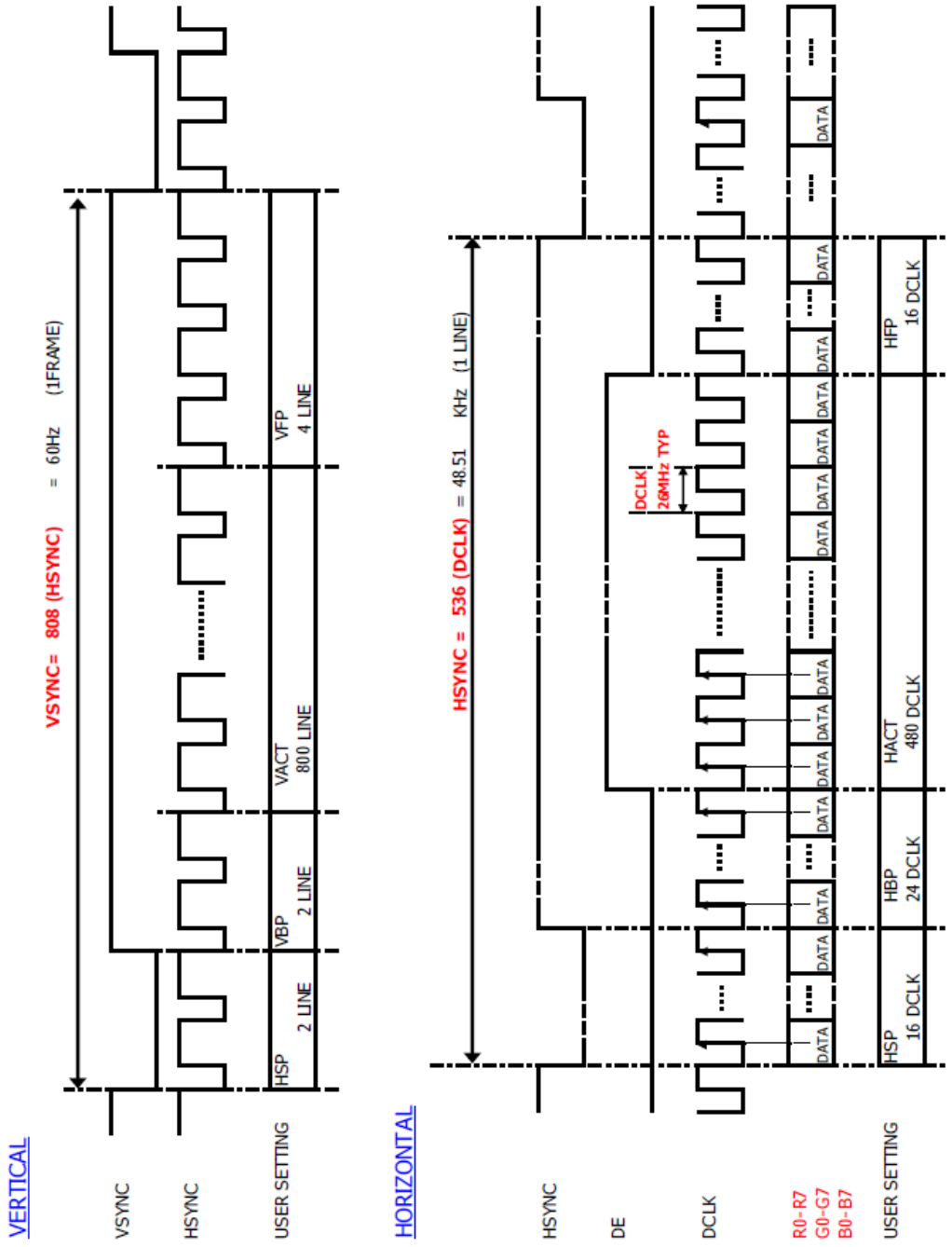

(5-7) Schematic of LCD module system

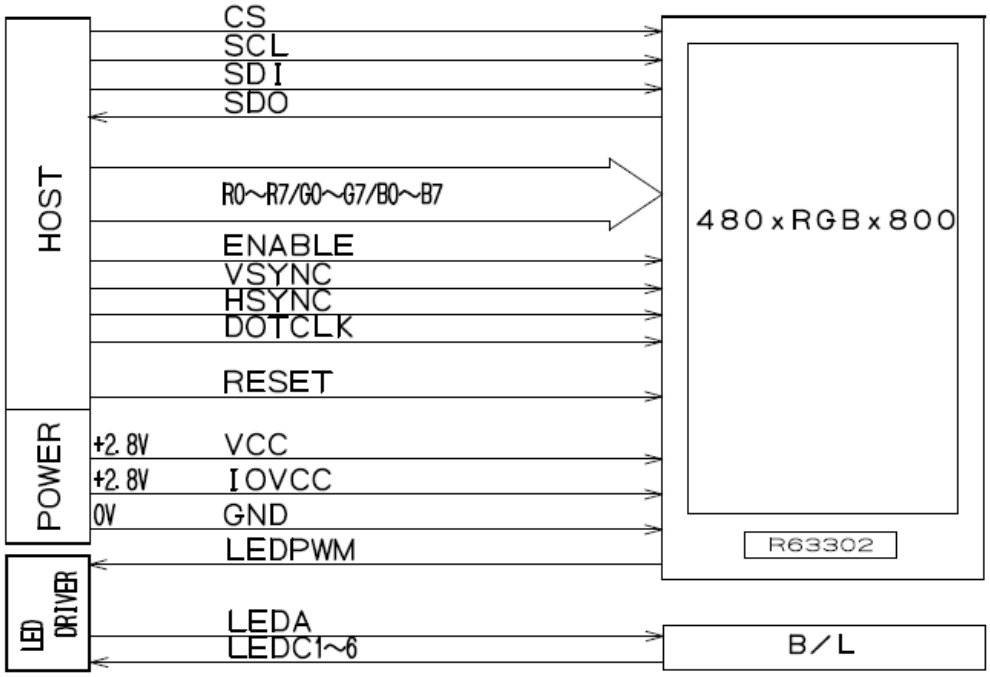

Fig.1 Schematic of LCD module system

6. Optical Characteristics

Table 14 VDDIO=2.8 V, VCC=2.8V, ILED=20mA/pcs, Ta = 25℃, CLK=26MHz

Optical Characteristics								
Parameter		symbol	condition	MIN	TYP	MAX	unit	Remark
Transmissive mode								
Brightness		Br	θ=0°	350	500	-	cd/㎡	Note1,2
Contrast ratio		T-Co	θ=0°	400	500	-	-	Note1,3
Viewing Angle		θ11	Co > 5	70	80	-	deg	Note1
		θ12		70	80	-		
		θ21		70	80	-		
		θ22		70	80	-		
Response Time	Rise	τr1	θ=0°	-	11	22	ms	Note1,4
	Decay	τd1		-	24	48	ms	
White chromaticity		x	θ=0°	0.25	0.30	0.35	-	Note.1,3
		y		0.27	0.32	0.37	-	
Red chromaticity		x	θ=0°	0.59	0.64	0.69	-	
		y		0.28	0.33	0.38	-	
Green chromaticity		x	θ=0°	0.23	0.28	0.33	-	
		y		0.58	0.63	0.68	-	
Blue chromaticity		x	θ=0°	0.10	0.15	0.20	-	
		y		0.01	0.06	0.11	-	
Uniformity		-	θ=0°	80	-	-	%	Note.1, 5
NTSC ratio		-	θ=0°	70	75	-	%	Note.1
Color Temperature		-	θ=0°	6000	7800	10000	K	Note.1
Flicker ratio		-	θ=0°	-	-	10(*1)	%	Note.1

*1: Measuring condition

- ・Measuring systems: YOKOGAWA 3298_01 + 3298_11
- ・Temperature = 25℃(±3℃), Frame Frequency = 60Hz (+/-5%),
  LED back-light: ON, Environment brightness < 150 lx, Sampling Frequency = 30Hz
- ・Measuring pattern : Horizontal stripe pattern <black (V0) / gray(V127) / black (V0) /gray (V127)…>
- ・Measured sample : New sample before a long term aging.
- ・Flicker ratio is very sensitive to measuring condition.

Note 1) Definition of range of visual angle

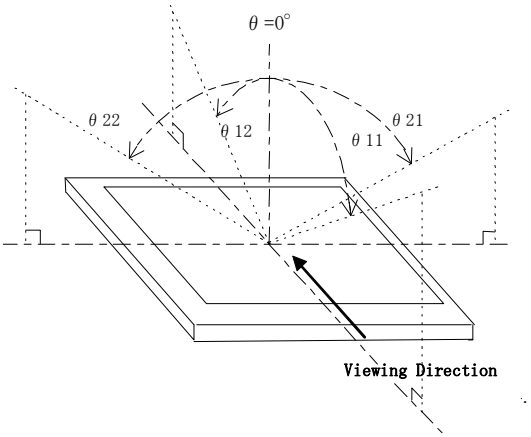

Fig .2 Definition of viewing angle

Note 2) Brightness is measured as shown in Fig.3, and is defined as the brightness of all pixels "White" at the center of display area on optimum contrast.

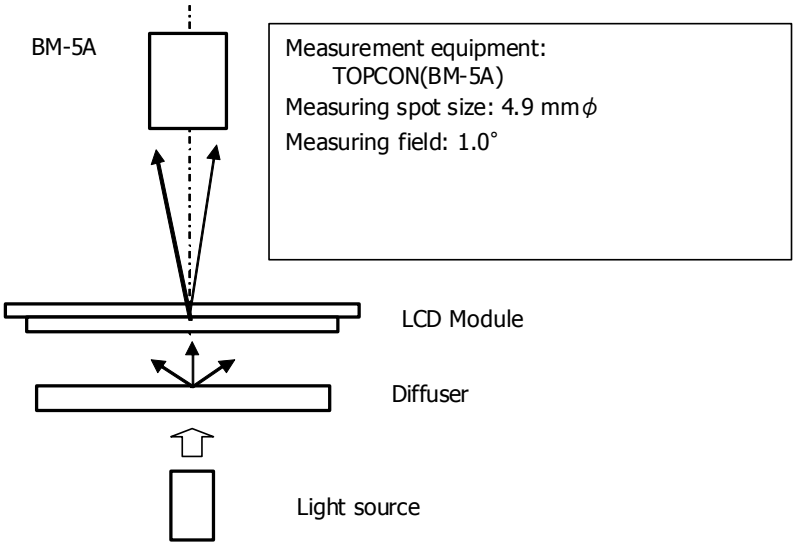

Fig. 3 Optical characteristics Test Method (Brightness)

Note 3) Contrast ratio is defined as follows:

$$\text{Transmissive mode Contrast} = \frac{\text{Brightness of all white pattern}}{\text{Brightness of standard black plate}}$$

Note 4) Response time is defined as follows:

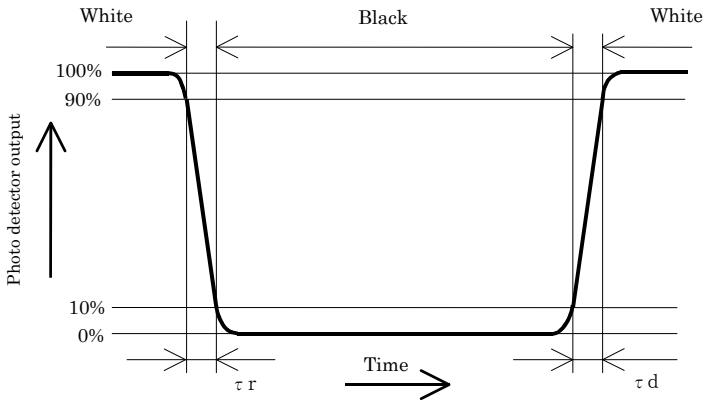

Fig. 4 Response time

Note 5) Uniformity is defined as follows:

$$\text{Uniformity} = \frac{\text{Minimum Luminance(brightness) in 9 points}}{\text{Maximum Luminance(brightness) in 9 points}}$$

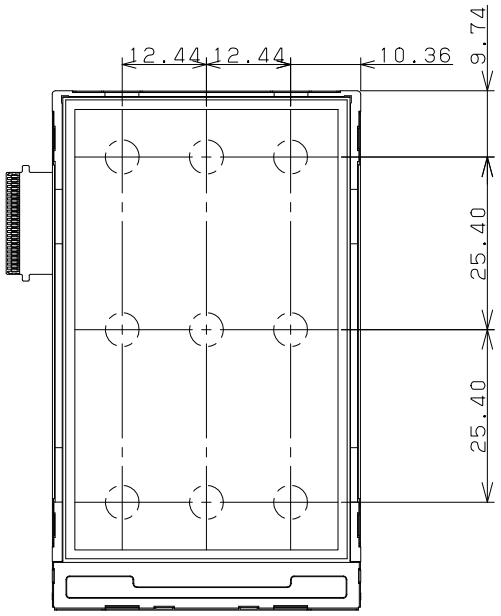

Fig. 5 Measuring Point

7. Reliability

Table. 15

No.	Test	Condition	Judgment criteria
1	Temperature Cycling	-30℃ → 80℃ → -30℃ … 60min (3min) 60min (3min) 60min 10cycle	Per table in below
2	High Temp. Storage	Ta=80℃ 96h	Per table in below
3	Low Temp. Storage	Ta=-30℃ 96h	Per table in below
4	Humidity Operation	Ta=60℃ 90%RH 96h	Per table in below (polarizer discoloration is excluded)
5	High Temp. Operation	Ta=70℃ 96h	Per table in below
6	Low Temp. Operation	Ta=-20℃ 96h	Per table in below
7	ESD	Discharge resistance: 0 Ω Discharge capacitor: 200 pF Discharge voltage: ±200 V Max Discharge 1 time to each input line ※ "GND" of display module is connected GND of test system ground.	Per table in below

INSPECTION	CRITERION(after test)
Appearance	No Crack on the FPC, on the LCD Panel
Alignment of LCD Panel	No Bubbles in the LCD Panel No other Defects of Alignment in Active area
Electrical current	Within device specifications
Function / Display	No Broken Circuit, No Short Circuit or No Black line No Other Defects of Display

8. Mechanical strength (*1,*2,*3)

Table. 16

Mechanical strength	MIN	TYP	MAX	Unit	Remark
3 Point Bending	5.5	—	—	Kgf	Note.1)
COG Constant Pushing	2.0	—	—	Kgf	Note.2)

※Testing condition

- ·Testing systems:
- ·Temperature = 25℃(±3℃)
- ·Non operation
- ·Measured sample : New sample before a long term aging.

*1. Mechanical Strength specification shall be out of LG Electronics's incoming inspection standard and not applicable to AQL.

*2. Above specification are meaning of the typical lowest values gotten from actual measurement at sampling test.

*3. If there are a lot of samples which doesn't meet the specifications in the standard sampling test, Sharp & LG have discussions how to proceed in each case.

Note.1) 3 Point Bending Test is measured as follows

The strength of 3 Point Bending is defined as the load of Pushing Bar at when LCD glass is broken.

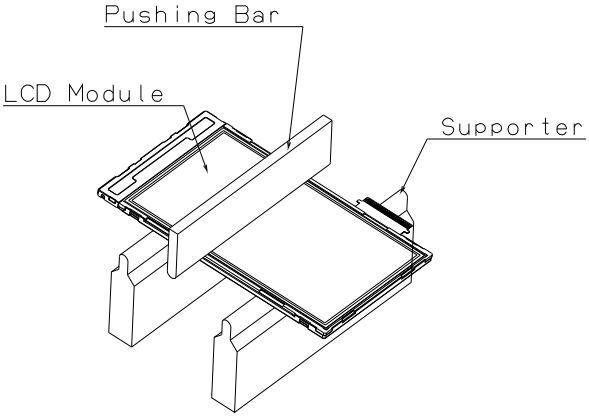

Fig. 6 3Point Bending Test

(Test condition)

Pushing Bar:

Tip shape：Φ3mm（round shape）

Sweep Speed：3mm/min

Material：Aluminum or Steel

Position： Fig. 7

Supporter

Tip shape：Φ3mm(round shape)

Pitch：36mm

Material：Aluminum or Steel

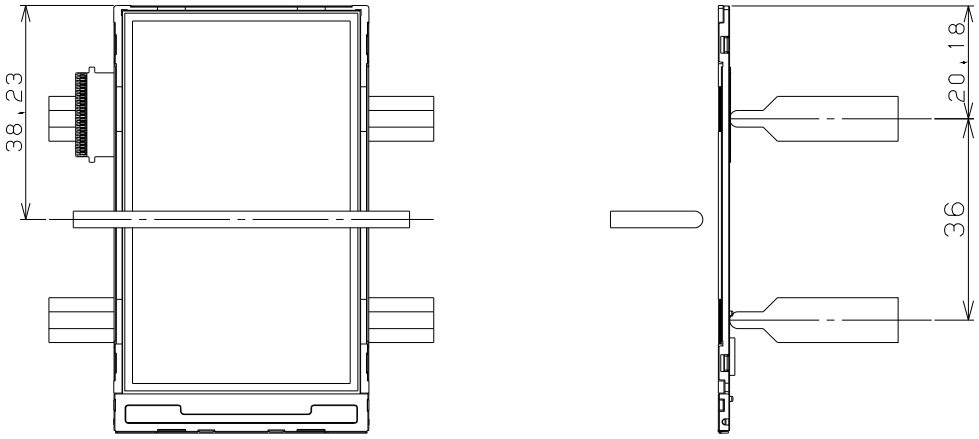

Fig. 7 Test Position

Note.2) COG Constant Pushing Test is measured as follows

The strength of COG Constant Pushing is defined as the load of Pushing Rod at when LCD glass or driver IC is broken.

(Test condition)

Pushing Rod:

Tip diameter：Φ5mm（flat shape）

Sweep Speed：3mm/min

Material：Aluminum or Steel

Position：Fig. 9

Supporter

Tip shape：Flat shape

Pitch：30mm

Material：Aluminum or Steel

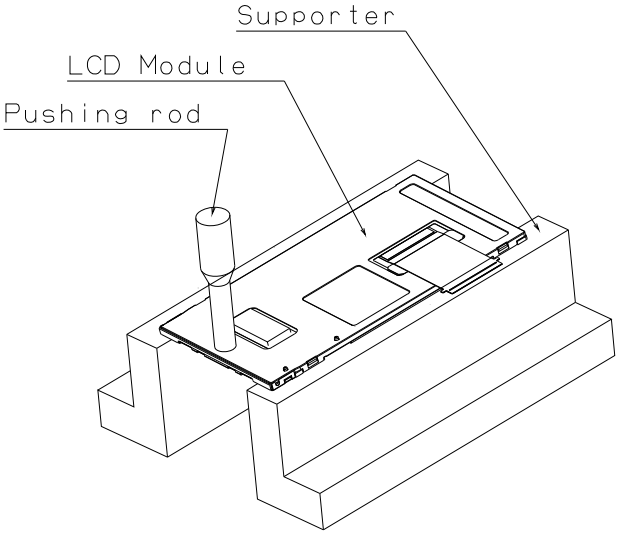

Fig. 8 COG Constant Pushing Test

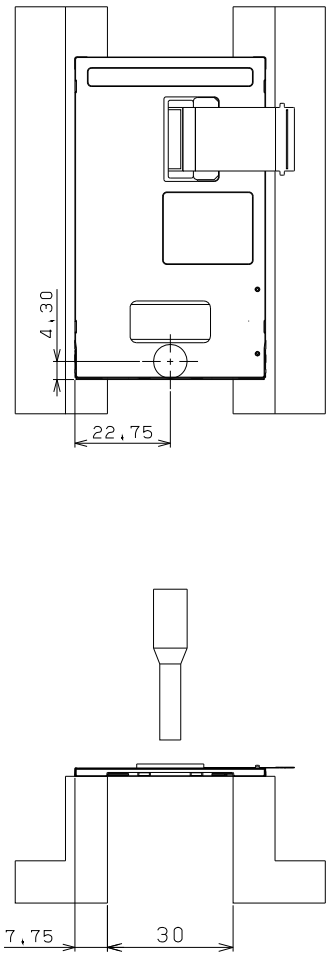

Fig. 9 Test Position

9. Packaging specifications

(9-1) Details of packaging

1) Packaging materials: Table.16
2) Packaging style : Fig. 10, 11

(9-2) Reliability

1) Vibration test

Table.17

Item	Test			
Frequency	5 Hz to 50 Hz (3 minutes cycle)			
Direction	Up-Down, Left-Right, Front-Back (3 directions)			
Period	Up-Down	Left-Right	Front-Back	Total
	60min	15min	15min	90min

The frequency should start at 5 Hz and vary continuously.

Total amplitude	20mm	0.2mm	20mm	0.2mm	
Frequency	5 Hz	50 Hz	5 Hz	50 Hz	(For 9.8m/s^2)

○ ○ ○

← 3 minutes →

2) Drop test

Drop height: 750mm
Number of drop: 10 times (Drop sequence: 1 corner, 3 edges, 6 faces)

(9-3) Packaging quantities

△D 400 modules per master carton

(9-4) Packaging weight

About (T.B.D) kg

(9-5) Packaging outline dimensions

360 mm×525 mm×225 mm (H)

(Packaging materials) Table.18

	Parts name	Materials
1	Master carton	Corrugate card board
2	Inside sleeve	Corrugate card board
3	Outside sleeve	Corrugate card board
4	Tray for packaging	Polystyrene with anti-static treatment + anti-static polystyrene
5	Protective bag	Polyethylene with anti-static treatment
6	OPP tape	Polypropylene
7	Bar code label	Anti-static polyethylene

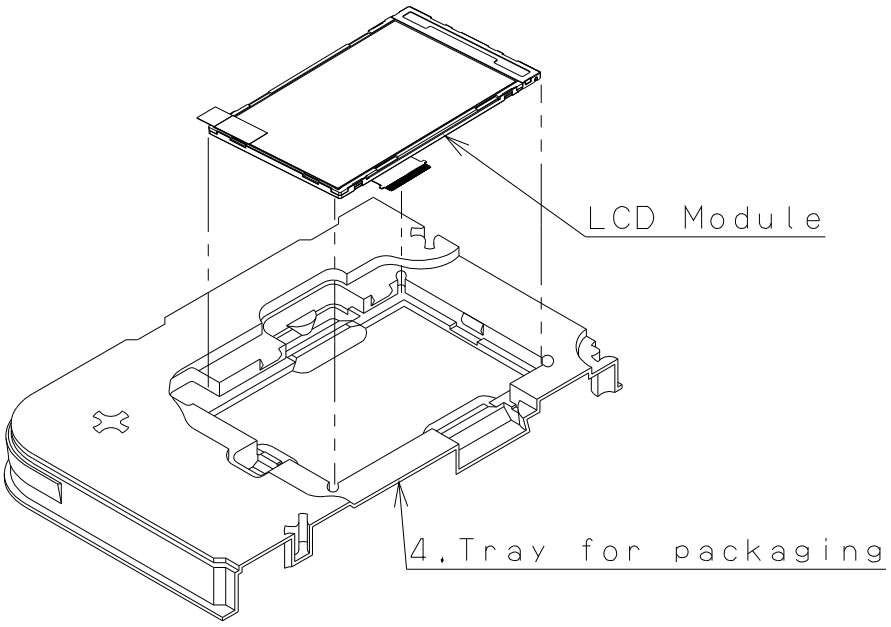

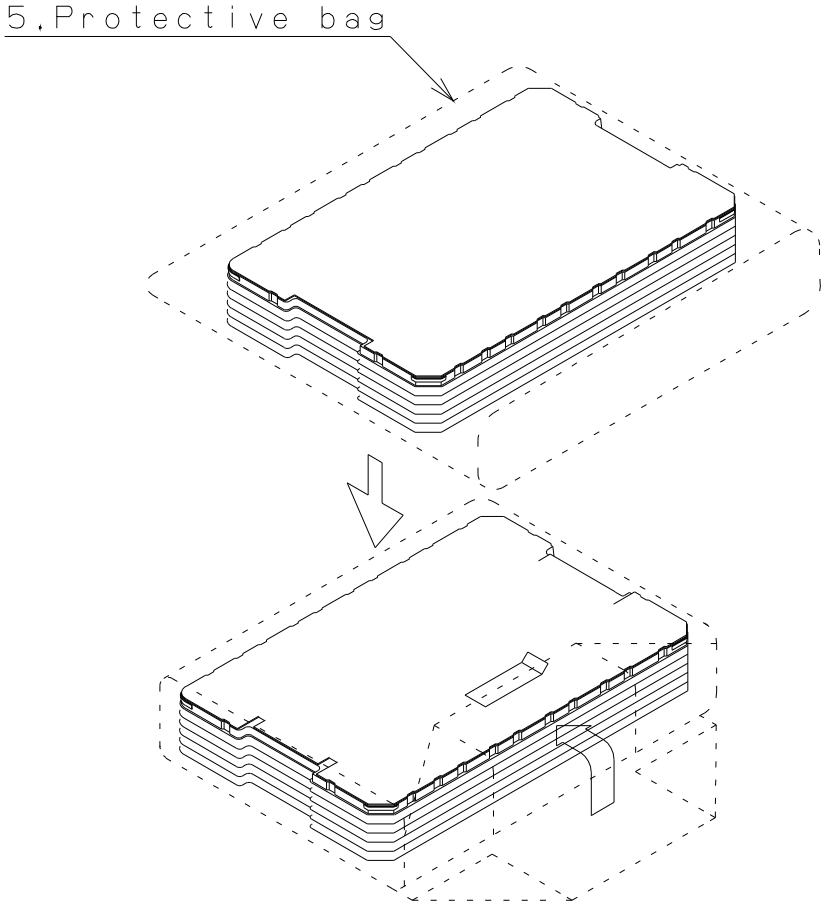

Fig.10 Packaging style (Tray for packaging)

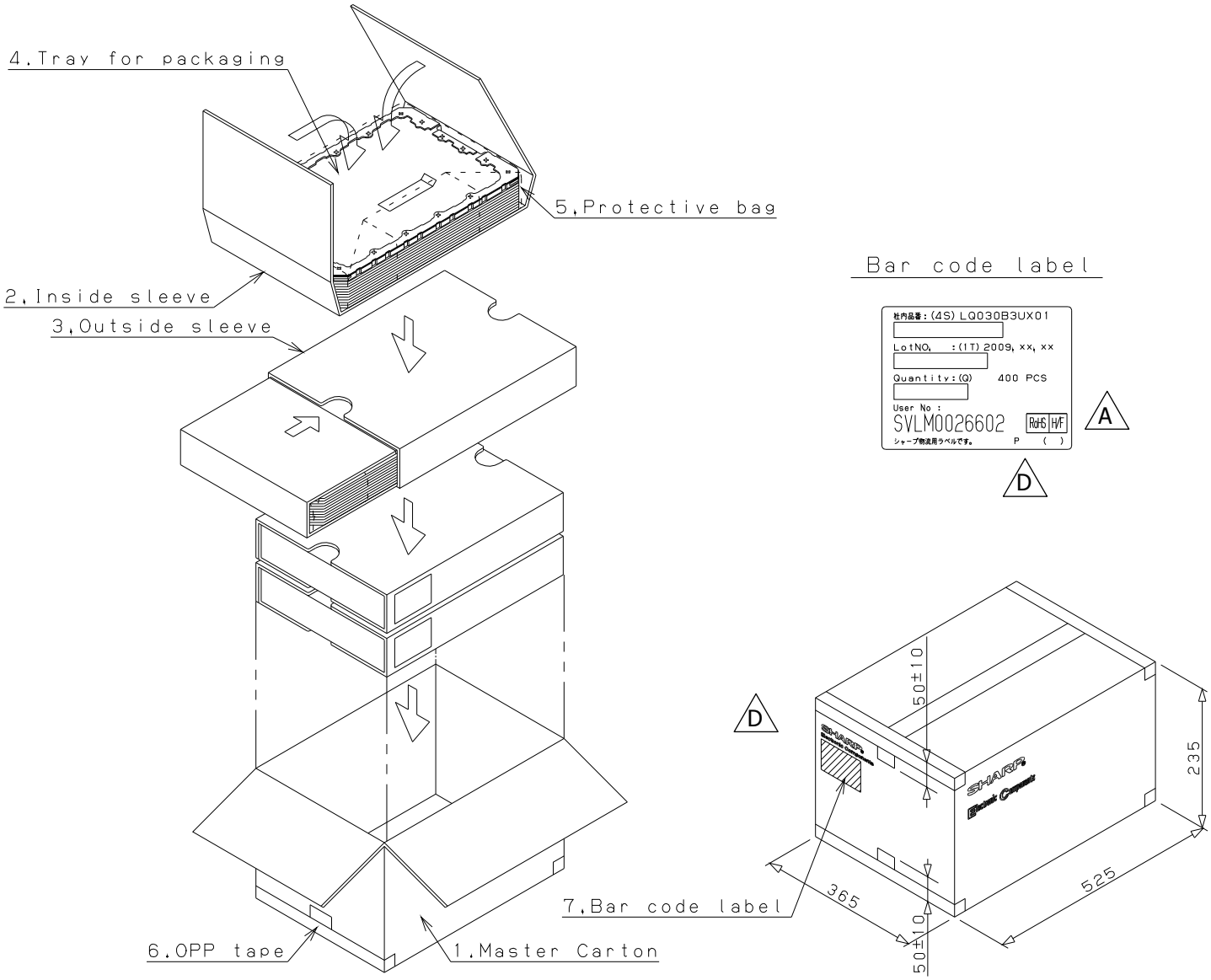

Fig. 11 Packaging style (Master carton for packaging)

10. Initial Sequence B

Condition

LCD Driver	R63302 (RENESAS SP)
Interface	Register Data : Serial I/F
	Picture Data : RGB I/F (24bit Colors)
Dot CLOCK (DCLK)	26MHz
Power Supply	VDDIO=2.8V / VCC=2.8V

Serial Data Input Data Format

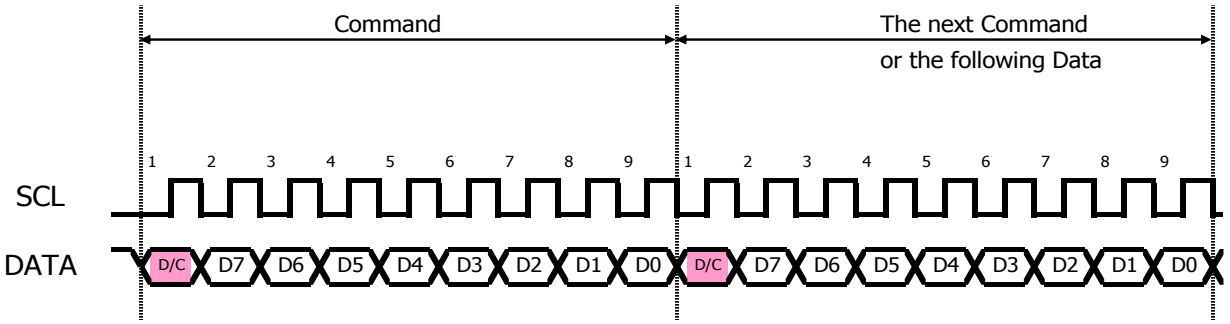

Power ON Sequence

Item	D/C	Command or Data	HEX	REMARK
VCC ON				
Wait Min 0ms				
VDDIO ON				
VSYNC="H"/HSYNC="H"/DE="H"/DOTCLK="H"or"L"/R0-7,G0-7,B0-7="H"or"L"				
HW RESET=L				
Wait Min 1ms				
HW RESET=H				
Wait Min 5ms				
Picture Write (VSYNC/HSYNC/DE/DCLK/R0-7/G0-7/B0-7 start)				
Display ON	L	Command	29h	
Sleep OUT	L	Command	11h	
Wait Min 120ms				
Address Mode Setting	L	Command	36h	
	H	Data	00h	
Pixel Format Setting	L	Command	3Ah	
	H	Data	70h	
Command Access Enable	L	Command	B0h	
	H	Data	00h	
BLC Setting	L	Command	B8h	
	H	Data	**h	00h:BLC OFF 01h:BLC ON
LED PWM ON/OFF, Brightness Setting	L	Command	B9h	
	H	Data	01h	
	H	Data	FFh	
Command Access Disable	L	Command	B0h	
	H	Data	03h	

Power OFF Sequence

Item	D/C	Command or Data	HEX	REMARK
Sleep IN	L	Command	10h	
WAIT 120ms				
Display OFF	L	Command	28h	
VSYNC=H/HSYNC=H /DE=H /DCLK=H or L /R0-7, G0-7, B0-7= H or L				
VDDIO OFF				
WAIT min 0ms				
VCC OFF				

Sleep Mode IN Sequence

Item	D/C	Command or Data	HEX	REMARK
Sleep In	L	Command	10h	
WAIT 120ms				
Display OFF	L	Command	28h	
VSYNC=H/HSYNC=H /DE=H /DCLK=H or L /R0-7, G0-7, B0-7= H or L				
Wait Min 120ms				

Sleep Mode Out Sequence

Item	D/C	Command or Data	HEX	REMARK
Picture Write (VSYNC/HSYNC/DE/DCLK/R0-7/G0-7/B0-7 start)				
Display ON	L	Command	29h	
Sleep OUT	L	Command	11h	
WAIT 120ms				

11. Parts List

Table 19

PARTS CODE	SPECIFICATION	SIZE	VENDOR
LCD	480XRGBx800	2.98"	SHARP
Polarizer	-	-	NITTO
Driver LSI	R63302	-	RENESAS SP
Back Light	-	-	OMRON
FPC	2layer	-	Nippon Mektron
LED1~6	NSSW206T	-	NICHIA
C1	1uF/6.3V	1005	TAIYO/MURATA/KYOCERA
C2	1uF/6.3V	1005	TAIYO/MURATA/KYOCERA
C3	1uF/6.3V	1005	TAIYO/MURATA/KYOCERA
C4	1uF/6.3V	1005	TAIYO/MURATA/KYOCERA
C5	1uF/6.3V	1005	TAIYO/MURATA/KYOCERA
C6	1uF/6.3V	1005	TAIYO/MURATA/KYOCERA
C7	1uF/6.3V	1005	TAIYO/MURATA/KYOCERA
C8	2.2uF/6.3V	1005	TAIYO/MURATA/KYOCERA
C9	1uF/10V	1005	TAIYO/MURATA/KYOCERA
C10	1uF/10V	1005	TAIYO/MURATA/KYOCERA
C11	1uF/10V	1005	TAIYO/MURATA/KYOCERA
C12	1uF/10V	1005	TAIYO/MURATA/KYOCERA
C13	1uF/16V	1608	TAIYO/MURATA/KYOCERA
C14	1uF/16V	1608	TAIYO/MURATA/KYOCERA
C15	2.2uF/10V	1608	TAIYO/MURATA/KYOCERA
C16	0.22uF/16V	1005	TAIYO/MURATA/KYOCERA
C17	0.22uF/10V	1005	TAIYO/MURATA/KYOCERA
C18	0.1uF/10V	1005	TAIYO/MURATA/KYOCERA
C19	0.1uF/10V	1005	TAIYO/MURATA/KYOCERA
C20	0.1uF/10V	1005	TAIYO/MURATA/KYOCERA
C21	0.1uF/10V	1005	TAIYO/MURATA/KYOCERA
C22	0.1uF/10V	1005	TAIYO/MURATA/KYOCERA
C23	0.1uF/10V	1005	TAIYO/MURATA/KYOCERA
D1	DSF05S30CTB	1208	MURATA
D2	HSD226-NKRF-E	2016	RENESAS
D3	HSD226-NKRF-E	2016	RENESAS
L1	LQH2MCN100M52L	1406	MURATA
R1	MCR01MZPJ103	1005	Rohm
C △C △D ~~R2~~	~~MCR01MZPJ000~~	~~1005~~	~~Rohm~~

12. FPC art work

(12-1) Layer 1

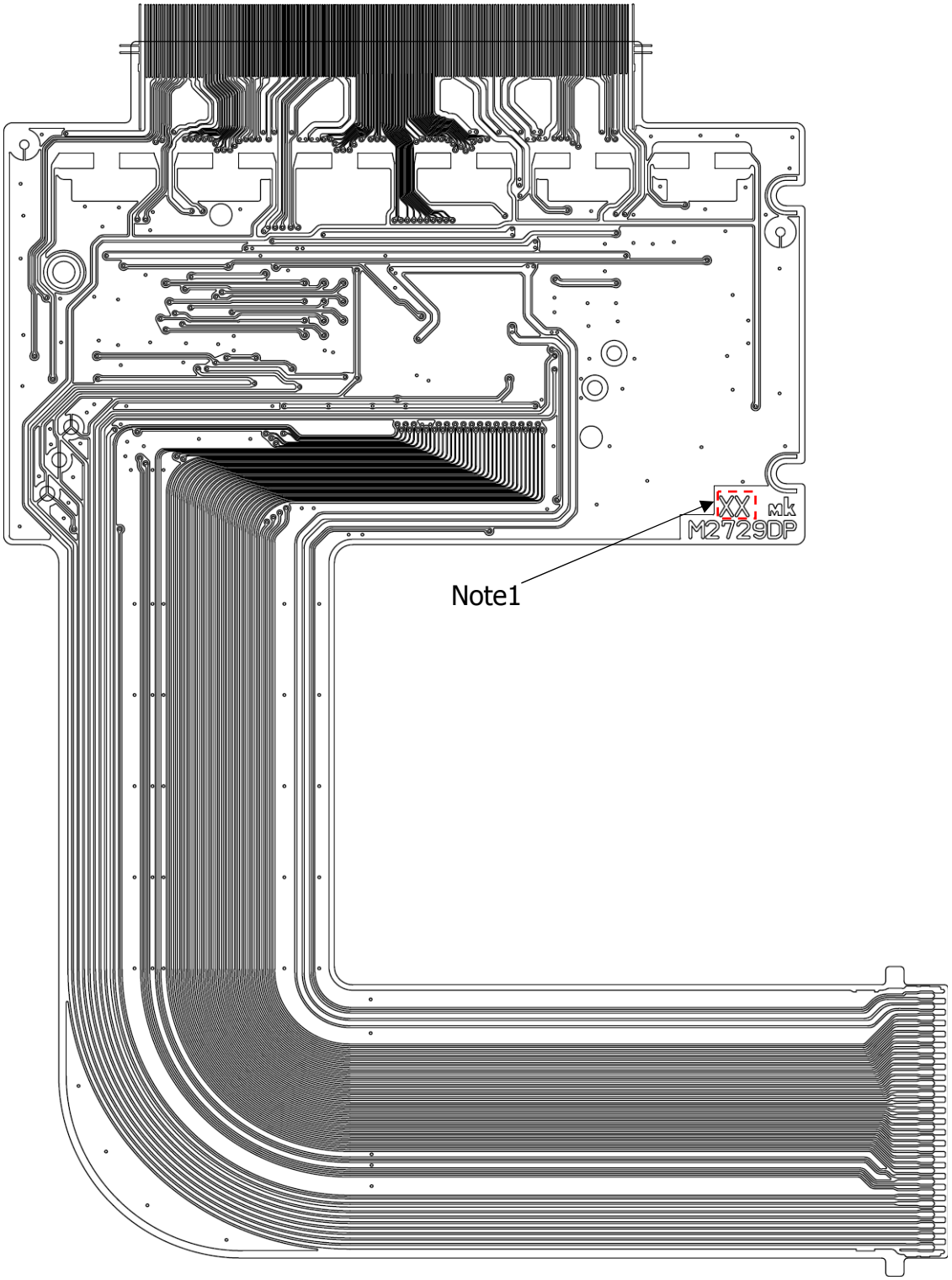

Note1: Cavity Number (01 to 12)

Fig. 12 Layer 1

(12-2) Layer 2 B D

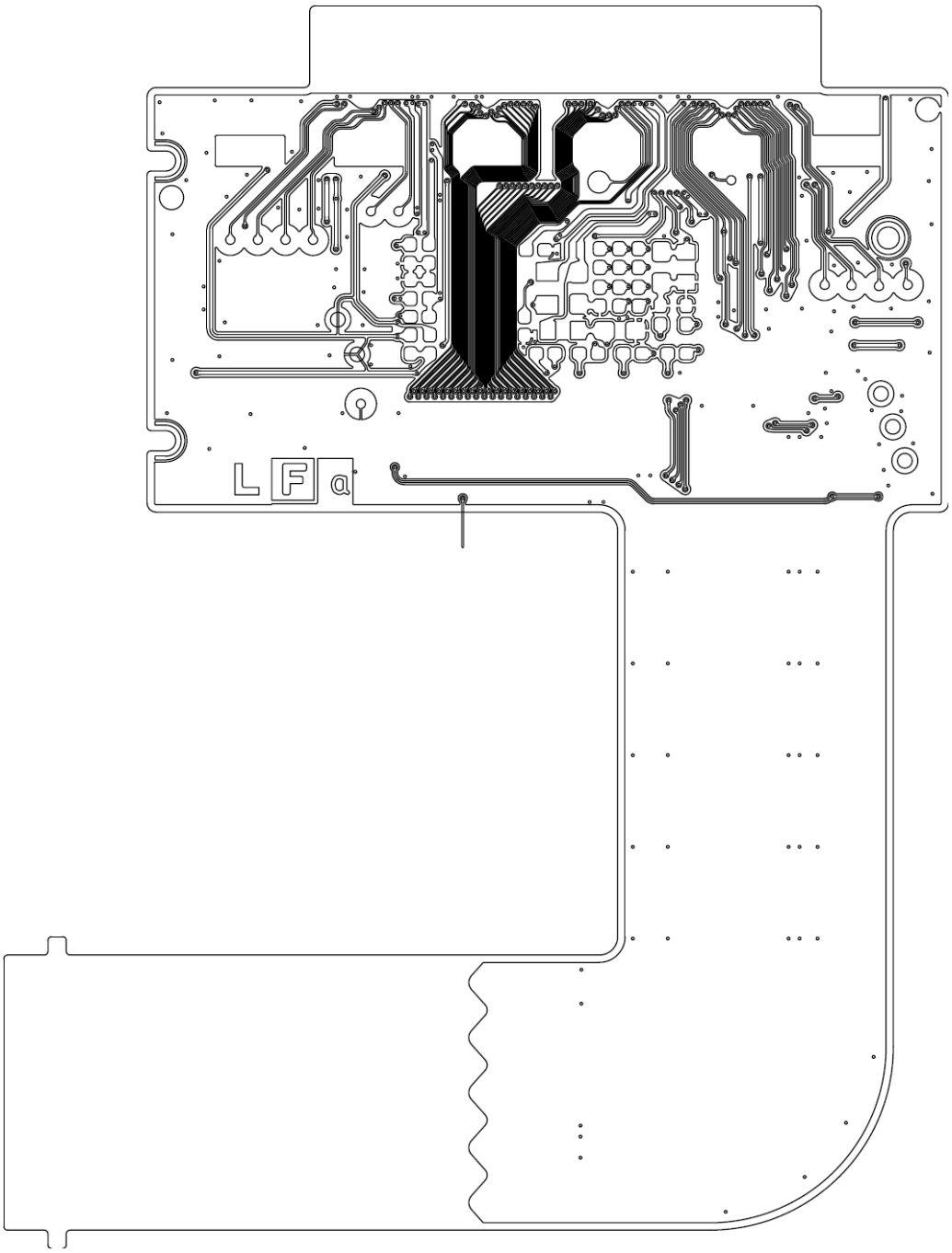

Fig. 13 Layer 2

(12-3) Part layout of layer 1

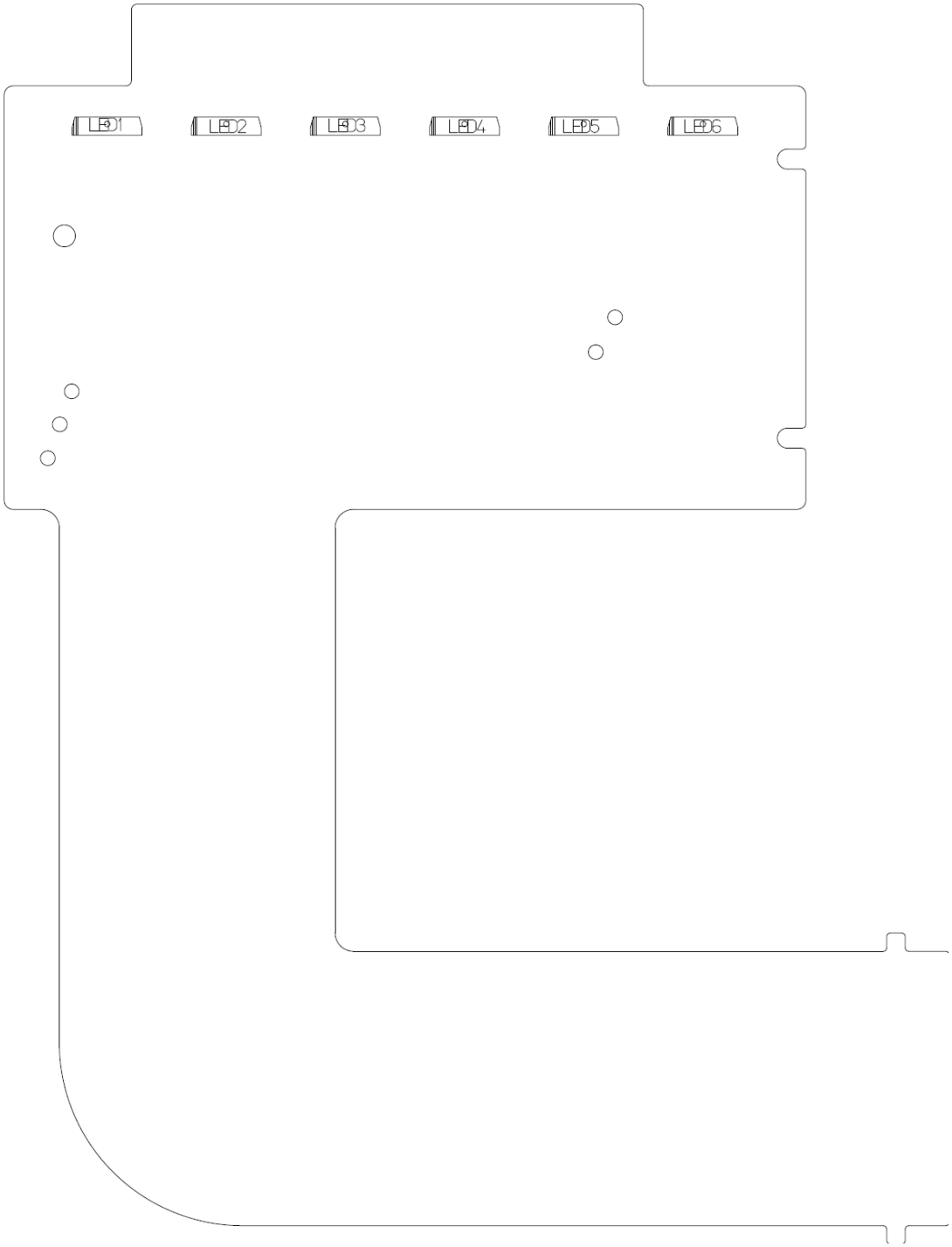

Fig. 14 Part layout of layer 1

(12-4) Part layout of layer 2 C D

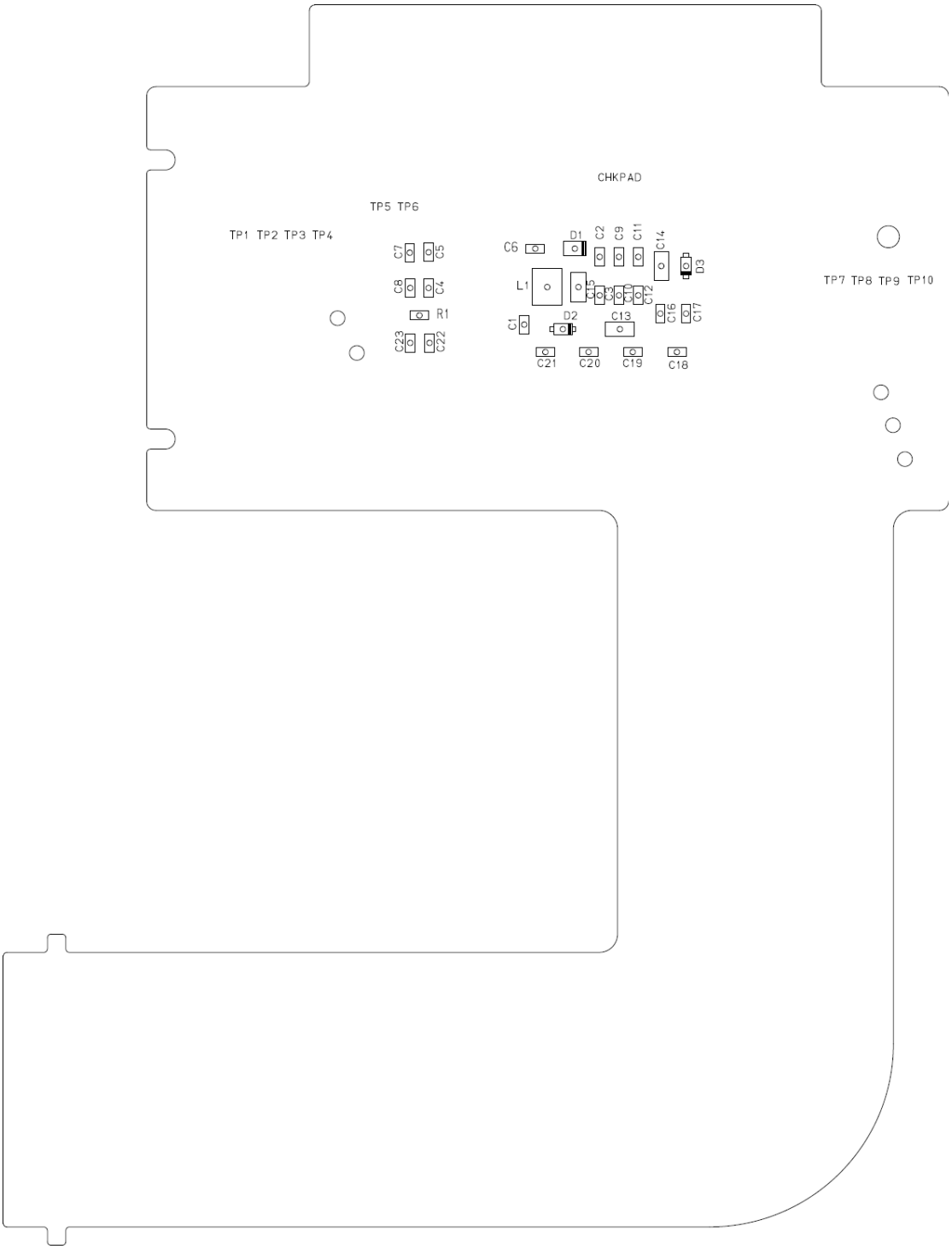

Fig. 15 Part layout of layer 2

13. Circuit diagram

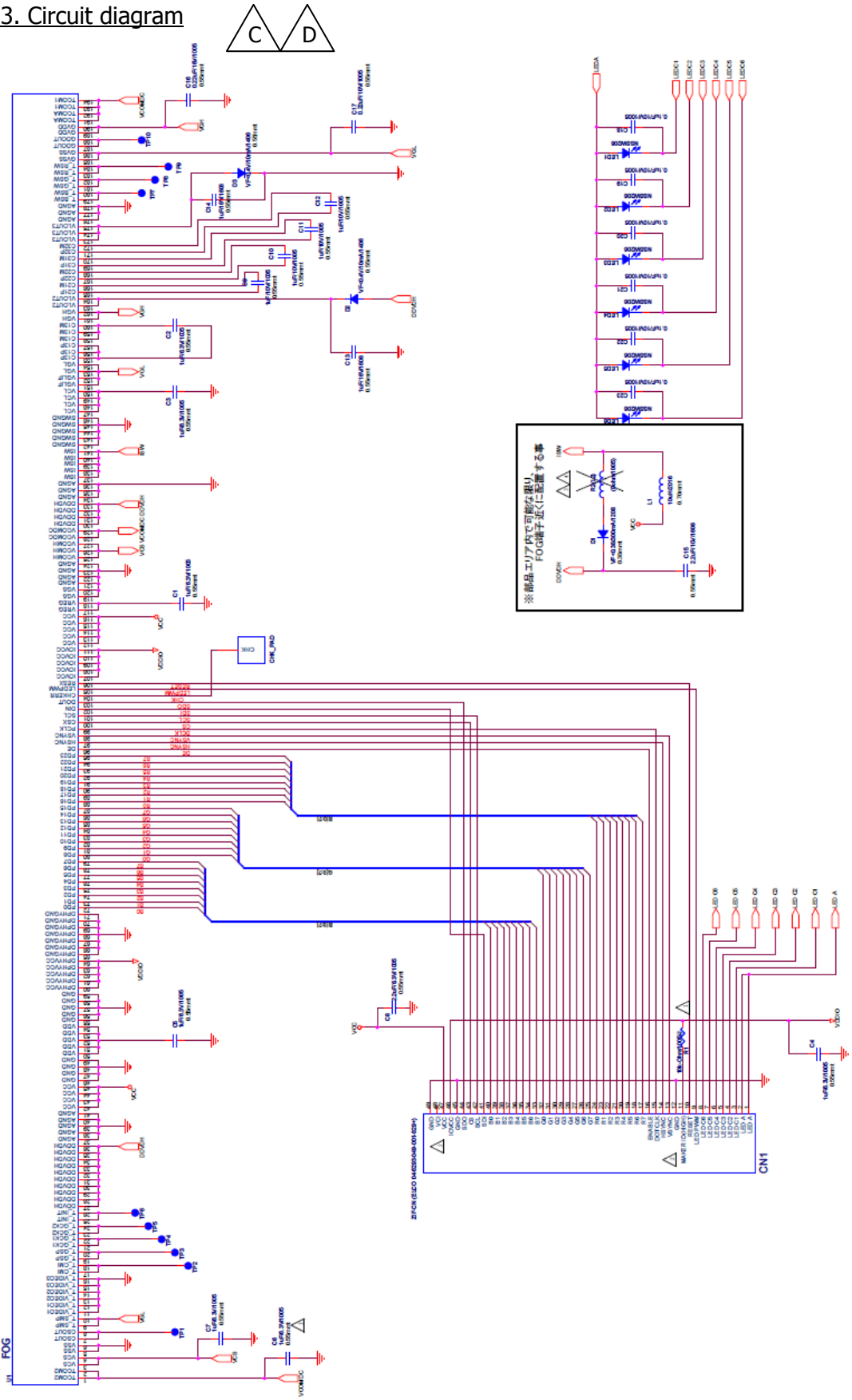

Fig. 16 Circuit diagram

14. Serial Number Label identification B

Numbering is specified as follows.

9 01 Z 000001 A Q

① ② ③ ④ ⑤ ⑥

① product year (lower 1 digits)

9: 2009

0: 2010

② product week

01 ～ 52 or 53

③ Line number

A ～ Z, 0 ～ 9

④ serial number

000001 ～ 999999, A00001 ～ Z99999

⑤ Version number

⑥ factory code

15. LCD Module Code Rule

LS 030 Y 3 D X 01

① ② ③ ④ ⑤ ⑥ ⑦

①Parts type

CGS LCD

②Active area size

3.0inch

③Dot format

WVGA format

④LCD type

Transmitting

⑤Interface type

RGB interface

⑥LCD viewing type

wide viewing angle

⑦Serial Code

16. Outline dimensions (A) (D)

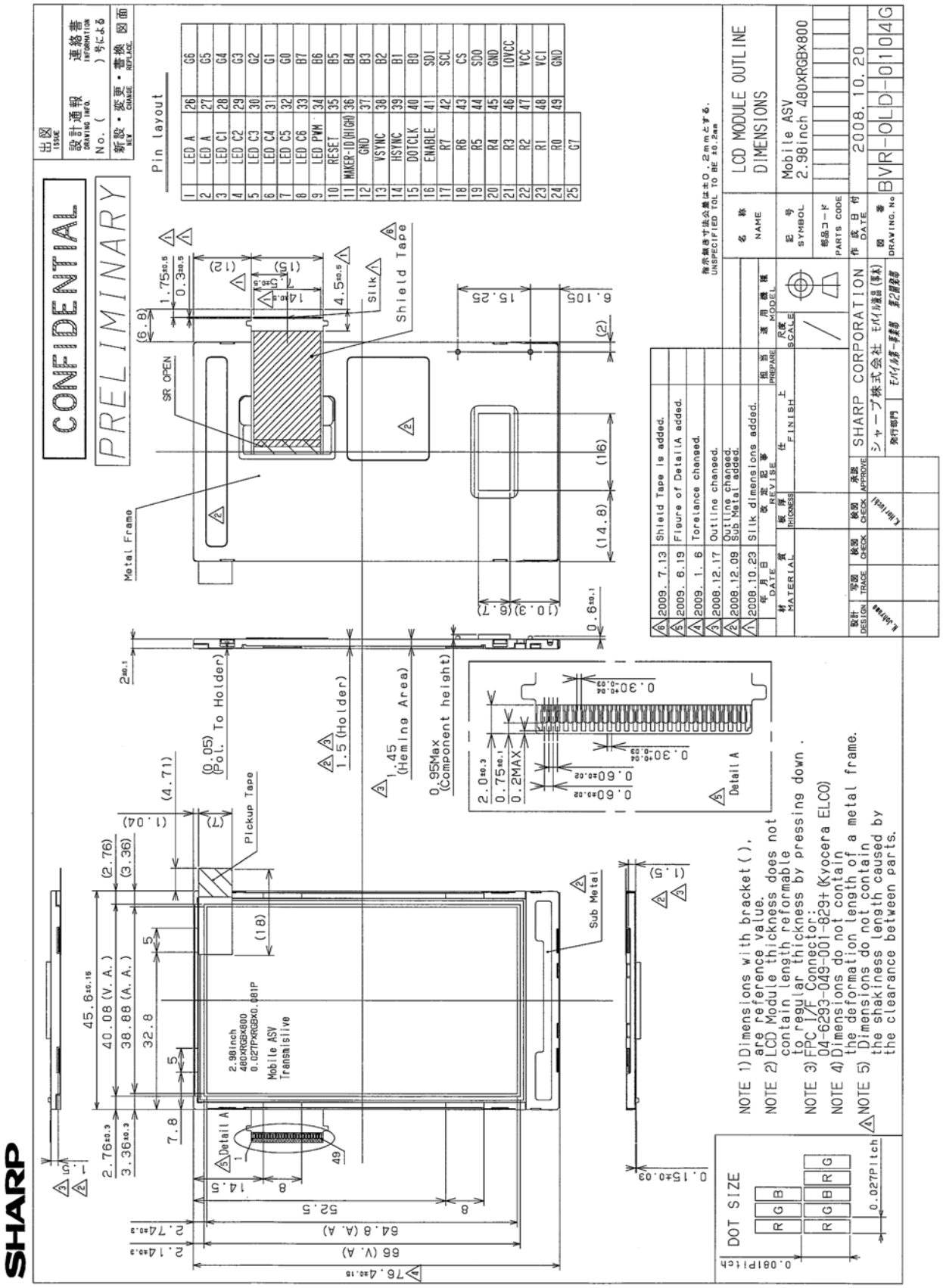

Fig. 17 Outline dimensions