PREPARED BY: DATE	SHARP LIQUID CRYSTAL DISPLAY GROUP SHARP CORPORATION	SPEC No. LCY-1210301B
		FILE No.
APPROVED BY: DATE		ISSUE 28.MAY.2010
		PAGE 34 Pages
	SPECIFICATION	APPLICABLE DIVISION ENGINEERING DEPT. I LCD DIVISION Ⅱ LIQUID CRYSTAL DISPLAY GROUP SHARP CORPORATION

DEVICE SPECIFICATION for

CGS Color LCD Module

(480 × RGB × 800 dots)

Model No.

LS038Y3LX01

☐ CUSTOMER'S APPROVALDATE

DATE _____

BY _____

PRESENTED

BY F. Kinoshita

Fumio Kinoshita
DEPARTMENT GENERAL MANAGER
ENGINEERING DEPT. I
LCD DIVISION I
MOBILE LIQUID CRYSTAL DISPLAY GROUP
SHARP CORPORATION

RECORDS OF REVISION			DOC. First issue	23.APR.2010
			Model No.	LS038Y3LX01
			Spec. No.	LCY-1210301B

DATE	REF.PAGE PARAGRAPH DRAWING No.	REVISED NO.	SUMMARY
23/APR/10	-	LCY-1210301	First issue
06/MAY/10	PAGE24	1 LCY-1210301A	Driver LSI VENDOR corrected.
28/MAY/10	PAGE13	2 LCY-1210301B	Optical Characteristics（Brightness、Contrast ratio）changed.

NOTICE

○ These specification sheets are the proprietary product of SHARP CORPORATION (SHARP) and include materials protected under copyright of SHARP. Do not reproduce or cause any third party to reproduce them in any form or by any means, electronic or mechanical, for any purpose, in whole or in part, without the express written permission of SHARP.

○ The application examples in these specification sheets are provided to explain the representative applications of the device and are not intended to guarantee any industrial property right or other rights or license you to use them. SHARP assumes no responsibility for any problems related to any industrial property right of a third party resulting from the use of the device.

○ The device listed in these specification sheets was designed and manufactured for use in Telecommunication equipment (terminals)

○ In case of using the device for applications such as control and safety equipment for transportation (aircraft, trains, automobiles, etc.), rescue and security equipment and various safety related equipment which require higher reliability and safety, take into consideration that appropriate measures such as fail-safe functions and redundant system design should be taken.

○ Do not use the device for equipment that requires an extreme level of reliability, such as aerospace applications, telecommunication equipment (trunk lines), nuclear power control equipment and medical or other equipment for life support.

○ SHARP assumes no responsibility for any damage resulting from the use of the device which does not comply with the instructions and the precautions specified in these specification sheets.

○ Contact and consult with a SHARP sales representative for any questions about this device.

[For handling and system design]

(1) Do not scratch the surface of the polarizer film as it is easily damaged.

(2) If the cleaning of the surface of the LCD panel is necessary, wipe it swiftly with cotton or other soft cloth. Do not use organic solvent as it damages polarizer.

(3) Water droplets on polarizer must be wiped off immediately as they may cause color changes, or other defects if remained for a long time.

(4) Since this LCD panel is made of glass, dropping the module or banging it against hard objects may cause cracks or fragmentation.

(5) Certain materials such as epoxy resin (amine's hardener) or silicone adhesive agent (de-alcohol or de-oxym) emits gas to which polarizer reacts (color change). Check carefully that gas from materials used in system housing or packaging do not hart polarizer.

(6) Liquid crystal material will freeze below specified storage temperature range and it will not get back to normal quality even after temperature comes back within specified temperature range. Liquid crystal material will become isotropic above specified temperature range and may not get back to normal quality. Keep the LCD module always within specified temperature range.

(7) Do not expose LCD module to the direct sunlight or to strong ultraviolet light for long time.

(8) If the LCD driver IC (COG) is exposed to light, normal operation may be impeded. It is necessary to design so that the light is shut off when the LCD module is mounted.

(9) Do not disassemble the LCD module as it may cause permanent damage.

(10) As this LCD module contains components sensitive to electrostatic discharge, be sure to follow the instructions in below.

① Operators
Operators must wear anti-static wears to prevent electrostatic charge up to and discharge from human body.

② Equipment and containers
Process equipment such as conveyer, soldering iron, working bench and containers may possibly generate electrostatic charge up and discharge. Equipment must be grounded through 100Mohms resistance. Use ion blower.

③ Floor
Floor is an important part to leak static electricity which is generated from human body or equipment.
There is a possibility that the static electricity is charged to them without leakage in case of insulating floor, so the countermeasure(electrostatic earth:$1\times10^{8}\Omega$) should be made.

④Humidity
Proper humidity of working room may reduce the risk of electrostatic charge up and discharge. Humidity should be kept over 50% all the time.

⑤Transportation/storage
Storage materials must be anti-static to prevent causing electrostatic discharge.

⑥Others
Protective film is attached on the surface of LCD panel to prevent scratches or other damages. When removing this protective film, remove it slowly under proper anti-ESD control such as ion blower.

(11) Hold LCD very carefully when placing LCD module into the system housing. Do not apply excessive stress or pressure to LCD module. Do not to use chloroprene rubber as it may affect on the reliability of the electrical interconnection.

(12) Do not hold or touch LCD panel to flex interconnection area as it may be damaged.

(13) As the binding material between LCD panel and flex connector mentioned in 12) contains an organic material, any type of organic solvents are not allowed to be used. Direct contact by fingers is also prohibited.

(14) When carrying the LCD module, place it on the tray to protect from mechanical damage. It is recommended to use the conductive trays to protect the CMOS components from electrostatic discharge. When holding the module, hold the Plastic Frame of LCD module so that the panel, COG and other electric parts are not damaged.

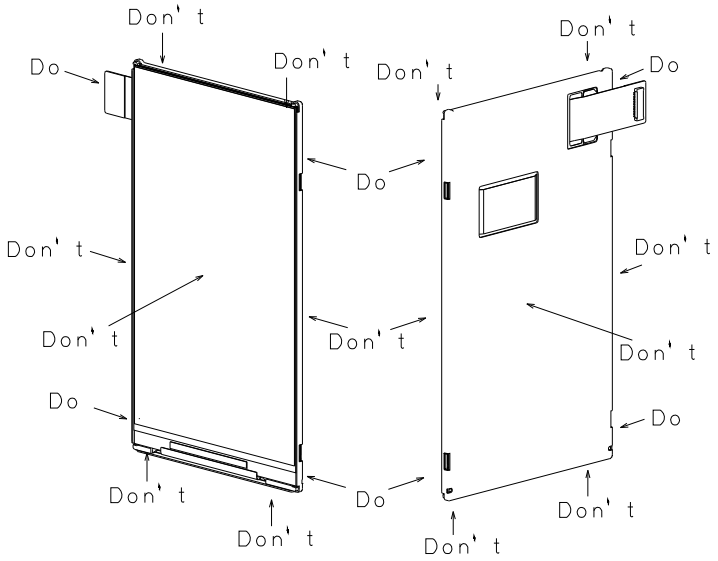

(15) Do not touch the COG's patterning area. Otherwise the circuit may be damaged.

(16) Do not touch LSI chips as it may cause a trouble in the inner lead connection.

(17) Place a protective cover on the LCD module to protect the glass panel from mechanical damages.

(18) LCD panel is susceptible to mechanical stress and even the slightest stress will cause a color change in background. So make sure the LCD panel is placed on flat plane without any continuous twisting, bending or pushing stress.

(19) Protective film is placed onto the surface of LCD panel when it is shipped from factory. Make sure to peel it off before assembling the LCD module into the system. Be very careful not to damage LCD module by electrostatic discharge when peeling off this protective film. Ion blower and ground strap are recommended.

(20) Make sure the mechanical design of the system in which the LCD module will be assembled matches specified viewing angle of this LCD module.

(21) This LCD module does not contain nor use any ODS (1,1,1-Trichloroethane, CCL4) in all materials used, in all production processes.

(22) Do not hit the capacitive touch screen powerfully, or drop it from the heights, as it is made of glass.

(23) Do not take or release the capacitive touch screen from the Flex.

(24) Do not overlap or strain stress as preservation.

(25) Avoid the parts of the Flex of the capacitive touch screen contacting directly with the Metal, in case short circuit happen.

(26) Do not bend the Flex often or pull it forcefully when installing or handling, to avoid the Flex damage.

(27) Do not touch the visual area when installing or handling.

(28) Please touch with the finger or electric pen during the capacitive touch screen operation.

(29) Pay attention to high voltage and static electricity.

[For operating LCD module]

(1) Do not operate or store the LCD module under outside of specified environmental conditions.
(2) At the shipment, adjust the contrast of each LCD module with electric volume. LCD contrast may vary from panel to panel depending on variation of LCD power voltage from system.
(3) As opt-electrical characteristics of LCD will be changed, dependent on the temperature, the confirmation of display quality and characteristics has to be done after temperature is set at 25 °C and it becomes stable.

[Precautions for Storage]

(1) Do not expose the LCD module to direct sunlight or strong ultraviolet light for long periods. Store in a dark place.
(2) The liquid crystal material will solidify if stored below the rated storage temperature and will become an isotropic liquid if stored above the rated storage temperature, and may not retain its original properties. Only store the module at normal temperature and humidity (25±5°C,60±10%RH) in order to avoid exposing the front polarizer to chronic humidity.
(3) Keeping Method

a. Don't keeping under the direct sunlight.

DON'T

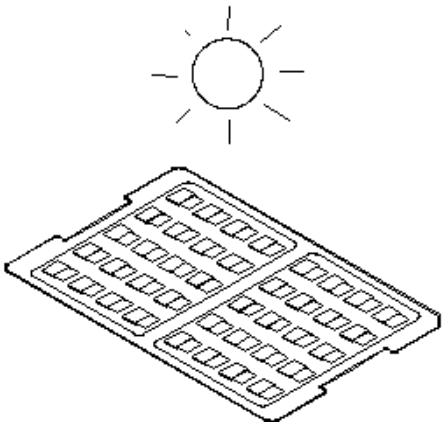

b. Keeping in the tray under the dark place.

DO

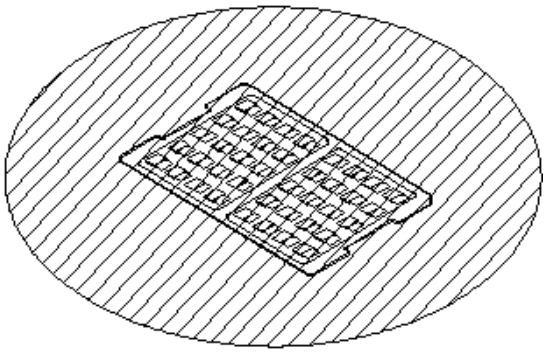

(1) Do not operate or store the LCD module under outside of specified environmental conditions.
(2) Be sure to prevent light striking the chip surface.

[Other Notice]

(1) Do not operate or store the LCD module under outside of specified environmental conditions.

(2) As electrical impedance of power supply lines (VCC-GND) are low when LCD module is working, place the de-coupling capacitor near by LCD module as close as possible.

(3) Reset signal must be sent after power on to initialize LSI. LSI does not function properly until initialize it by reset signal.

(4) Generally, at power on, in order not to apply DC charge directly to LCD panel, supply logic voltage first and initialize LSI logic function including polarity alternation. Then supply voltage for LCD bias. At power off, in order not to apply DC charge directly to LCD panel, execute Power OFF sequence and Discharge command.

(5) Don’t touch to FPC surface, exposed IC chip, electric parts and other parts, to any electric, metallic materials.

(6) No bromide specific fire-retardant material is used in this module.

(7) Do not display still picture on the display over 2 hours as this will damage the liquid crystal.

(8) The connector used in this LCD module is the one Sharp have not ever used.
Therefore, please note that the quality of this connector concerned is out of Sharp's guarantee.

[Precautions for Discarding Liquid Crystal Modules]

COG: After removing the LSI from the liquid crystal panel, dispose of it in a similar way to circuit boards from electronic devices.
LCD panel: Dispose of as glass waste. This LCD module contains no harmful substances. The liquid crystal panel contains no dangerous or harmful substances. The liquid crystal panel only contains an extremely small amount of liquid crystal (approx.100mg) and therefore it will not leak even if the panel should break.
-Its median lethal dose (LD50) is greater than 2,000 mg/kg and a mutagenetic (Aims test: negative) material is employed.
FPC: Dispose of as similar way to circuit board from electric device.

1. Application

This data sheet is to introduce the specification of LS038Y3LX01 active matrix 16,777,215color LCD module.
Main color LCD module is controlled by Driver IC (S6D16A0).
If any problem occurs concerning the items not stated in this specification, it must be solved sincerely by both parties after deliberation.
As to basic specification of LCD driver IC refer to the IC specification and handbook. As to basic specification of touch panel controller IC refer to the IC specification and handbook.

2. Construction and Outline

Construction: LCD panel, Driver (COG), FPC with electric components,
8 White LED lump, prism sheet, diffuser, light guide and reflector, plastic frame and metal frame to fix them mechanically.
Outline: See page 31
Connection: BtoB connector for LCD (LSMtron, GB042-30P-H10-E3000)

There shall be no scratches, stains, chips, distortions and other external drawbacks that may affect the display function.

Rejection criteria shall be noted in Inspection Standard (IIS117004)

In order to realize thin module structure, double-sided adhesive tapes are used to fix LCD panels. As these tapes do not guarantee to permanently fix the panels, LCD panel may rise from the module when shipped from factory.
So please make sure to design the system to hold the edges of LCD panel by the soft material such as sponge when LCD module is assembled into the cabinet.

3. Mechanical Specification

Parameter		Specifications	Unit
Outline dimensions (typ)		53.748 (W) × 92.49 (H) × 2.00 (D)	mm
Main LCD Panel	Active area	49.32 (W) × 82.2 (H)	mm
	Display format	480×RGB(W)×800(H)	-
	Dot pitch	0.03425 (W) × 0.10275(H)	mm
	Base color *1	Normally Black	-
Mass		Approx 24	g

Table 1

*1 Due to the characteristics of the LC material, the colors vary with environmental temperature.

4. Absolute Maximum Ratings

(4-1) Electrical absolute maximum ratings

Table 2 LCD module

Ta=25 ℃

Parameter	Symbol	Min	Max	Unit	Remark
Supply voltage	VDDIO-GND	-0.3	5.0	V	*1
	VCC-GND	-0.3	5.0	V	*1
Input Voltage	V_{IN}	-0.3	VDDIO+0.3	V	*2

*1: VCC>=VDDIO

*2: Input terminal of logic system.

Voltage value is based on GND = 0V.

Environment Conditions

Table 3

Item	Top		Tstg		Remark
	MIN.	MAX.	MIN.	MAX.	
Ambient temperature	-20 °C	+70°C	-30 °C	+80°C	Note 2)
Humidity	Note 1)		Note 1)		No condensation

Note1) Ta ≤ 40 °C.....95 % RH Max

Note2) Ta > 40 °C.....Absolute humidity shall be less than Ta=40 °C /95 % RH.

As opt-electrical characteristics of LCD will be changed, dependent on the temperature, the confirmation of display quality and characteristics has to be done after temperature is set at 25 °C and it becomes stable.

Be sure not to exceed the rated voltage, otherwise a malfunction may occur.

5. Electrical Specifications

(5-1) Electrical characteristics

Table 4 LCD module Ta=25 ℃, GND=0V, DCLK=26MHz

Parameter	Symbol	Conditions	Min.	Typ.	Max.	Unit	Applicable Pin
Supply voltage	VDDIO-GND	Ta=-20～70 °C	1.70	1.80	1.90	V	(note 1)
Supply voltage	VCC-GND	Ta=-20～70 °C	2.90	3.00	3.10	V	
"H" level input voltage	V_{IH1}	Ta=-20～70 °C	0.8 VDDIO	-	-	V	(note 2)
"L" level input voltage	V_{IL1}		-	-	0.2 VDDIO	V	
"H" level output voltage	V_{OH1}	Ta=-20～70 °C	0.8 VDDIO	-	-	V	(note 3)
"L" level output voltage	V_{OL1}	I_{OH1}=-1 mA , I_{OL1} = 1 mA	-	-	0.2 VDDIO	V	
Differential input high threshold voltage	VIT+	Ta=-20～70 °C	-	-	50	mV	(Note 4)
Differential input low threshold voltage	VIT-	Ta=-20～70 °C	-50	-	-		(Note 4)
Differential input high threshold voltage (offset for hibernation wake up)	VIT+	Ta=-20～70 °C	-	125	175	mV	(Note 4)
Differential input low threshold voltage (offset for hibernation wakeup)	VIT-	Ta=-20～70 °C	75	125	-	mV	(Note 4)
Receiver differential voltage range with respect to GND	VInput Range	Ta=-20～70 °C	0	-	1.65	V	(Note 4)
Differential terminal resistance	Rterm	Ta=-20～70 °C	98	100	102	Ohm	(Note 4)
Current consumption	IDD+ICC	Ta=25 °C	-	31.00	37.30	mA	(note 5)

(note 1) The condition VDDIO ≤ VCC must be met
(note 2) Input mode of RESET
(note 3) Output mode of OVSYNC
(note 4) Input mode of MDP, MDN, MSP, MSN
(note 5) Following Conditions

Ta=25℃, frame frequency=62Hz, MDDI LINK OFF .

Display Pattern: All ON (white) Pattern.

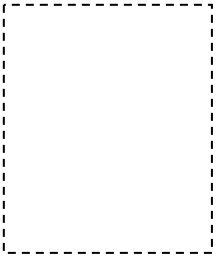

*All ON (white) Pattern

(5-2) LED back light

(1) At main panel the back light uses 7pcs edge light type white LED.

Table 5

Parameter	Conditions	Symbol	Min.	Typ.	Max.	Unit	Remark
Forward current	Ta=25 °C	I_{LED}	-	20.0 *1	-	mA	LEDA-LEDC

LED lamp: NSSW206AT (NICHIA)

([Luminous Intensity rank]: NW700~NW775, [Color rank]: Sa62/Sbj2)

*1 per one piece of LED

*Please consider Allowable Forward Current on used temperature

(refer to Ambient Temperature vs. Allowable Forward Current curve)

Table 6

Absolute Maximum Ratings (Ta=25°C)

Item	Symbol	Absolute Maximum Rating	Unit
Forward Current	I_F	35	mA
Pulse Forward Current	I_{FP}	100	mA
Reverse Voltage	V_R	5	V
Power Dissipation	P_D	119	mW
Operating Temperature	T_{opr}	-30 ~ + 85	°C
Storage Temperature	T_{stg}	-40 ~ +100	°C
Soldering Temperature	T_{sld}	Reflow Soldering : 260°C for 10sec. Hand Soldering : 350°C for 3sec.	

I_{FP} Conditions : Pulse Width ≤ 10msec. and Duty ≤ 1/10

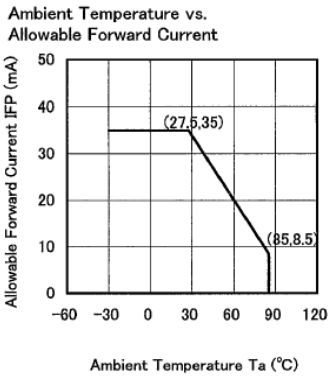

*1 per one piece of

Table 7

Initial Electrical/Optical Characteristics (Ta=25℃)

Item		Symbol	Conditon	Typ.	Max.	Unit
Forward Voltage		V_f	I_F=20[mA]	(3.1)	3.4	V
Reverse Current		I_R	V_R=5[V]	-	50	μA
Luminous Flux		Φ_V	I_F=20[mA]	(7.7)	-	lm
Luminous Intensity		I_V	I_F=20[mA]	(2.5)	-	cd
Chromaticity Coordinate※	x	-	I_F=20[mA]	0.300	-	-
	y	-	I_F=20[mA]	0.295	-	-

※Please refer to CIE 1931 chromaticity diagram.

Table 9

(I_F=20mA,Ta=25°C)

	Rank Sbj2			
x	0.296	0.291	0.299	0.304
y	0.276	0.287	0.301	0.290

	Rank Sa62			
x	0.288	0.282	0.291	0.296
y	0.262	0.272	0.287	0.276

* Color Coordinates Measurement allowance is ± 0.005.

* Basically, a shipment shall consist of the LEDs of a combination of the above ranks. The percentage of each rank in the shipment shall be determined by Nichia.

*1 per one piece of

Table 8

Ranking (Ta=25℃)

Item		Symbol	Conditon	Min.	Max.	Unit
Luminous Flux	Rank NW775	Φ_V	I_F=20[mA]	7.75	8.00	lm
	Rank NW750			7.50	7.75	
	Rank NW725			7.25	7.50	
	Rank NW700			7.00	7.25	

*Luminous Flux Measurement allowance is ±7%

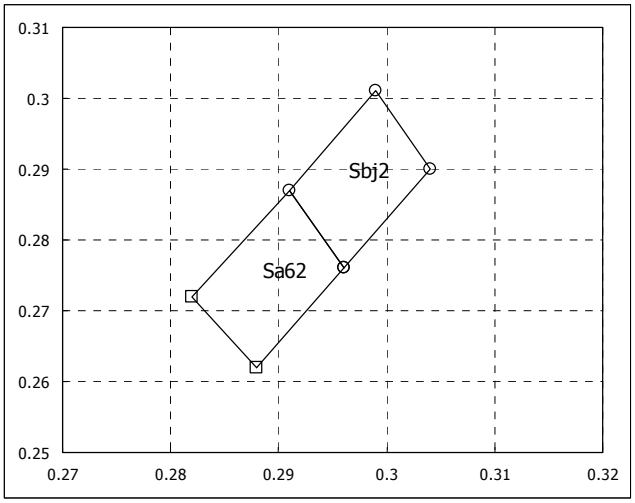

(5-3) Interface signals

Table 10 LCD module

Pin No	Symbol	Description	I/O	Remarks
1	GND	GND level pin	-	
2	VCC	Power supply for LCD	-	
3	VDDIO	Power supply for I/O	-	
4	MAKER_ID	Connected to GND	-	
5	GND(MTPV1)	GND level pin	-	
6	NC(MTPV2)	Non-connection	-	
7	OVSYNC	Vsync output	O	
8	RESET	Reset enable pin	I	
9	GND	GND level pin	-	
10	MDP	MDDI Data +	I/O	
11	MDN	MDDI Data -	I/O	
12	GND	GND level pin	-	
13	MSP	MDDI Strobe +	I/O	
14	MSN	MDDI Data -	I/O	
15	GND	GND level pin	-	
16	GND	GND level pin	-	
17	LED PWM	Control signal for LED backlight	O	
18	LEDA	LED anode	-	
19	LEDA	LED anode	-	
20	LED C1	LED cathode	-	
21	LED C2	LED cathode	-	
22	LED C3	LED cathode	-	
23	LED C4	LED cathode	-	
24	LED C5	LED cathode	-	
25	LED C6	LED cathode	-	
26	LED C7	LED cathode	-	
27	LED C8	LED cathode	-	
28	GND	GND level pin	-	
29	GND	GND level pin	-	
30	GND	GND level pin	-	

I/F connector : GB042-30P-H10-E3000 (LMS)
Signals connect to LCD module. Symbols correspond able to Circuit diagram in Page 33.

(5-4) Host Interface Timing Diagrams for **MDDI**

Parameter	Description	MIN	TYP	MAX	Unit
Thost-enable	Host output enable time	0		24*tBIT	ns
Thost-disable	Host output disable time, entire length of the turn-around 1 field	0		24*tBIT	ns
Tclient-enable	Client output enable time, entire length of the turn-around 1 field	0		24*tBIT	ns
Tclient-disable	Client output disable time, measured from the end of the last bit of the turn-around 2 field	0		24*tBIT	ns

Note : tBIT = 1/Link data rate, where link data rate is the bit rate of signal data pair.

Table 11

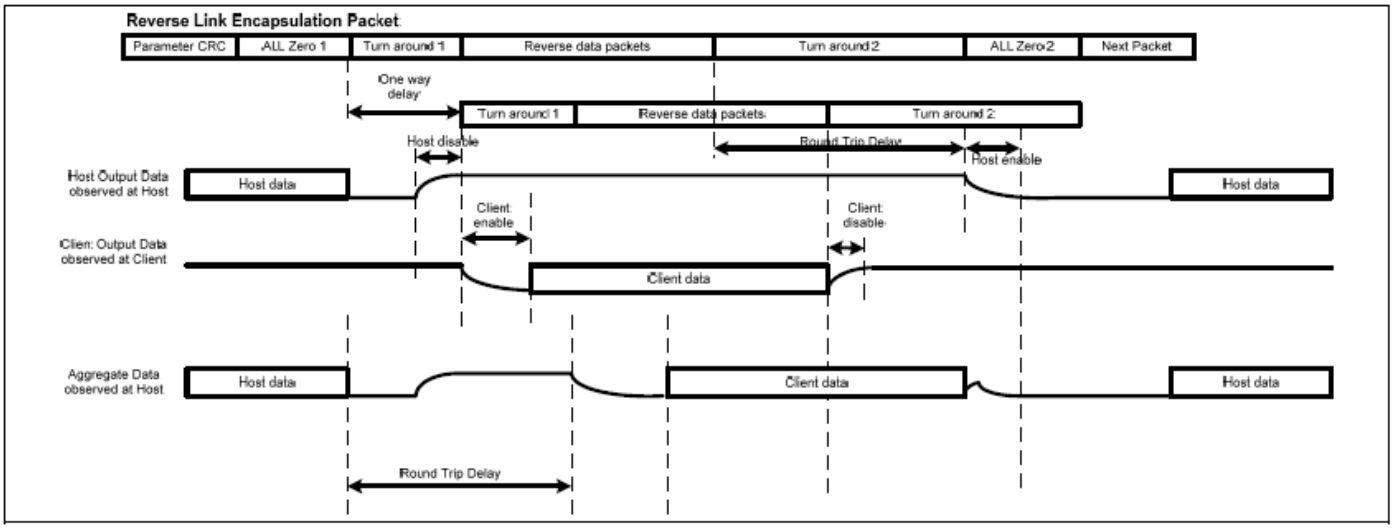

(5-5) Schematic of LCD module system

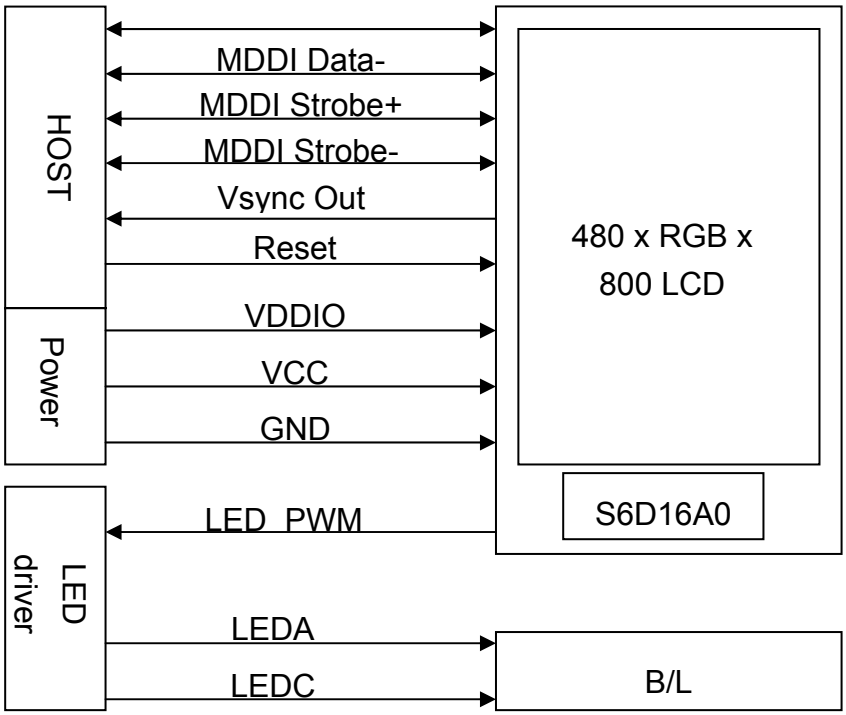

Fig.1 Schematic of LCD module system

6. Optical Characteristics

Table 12 VDDIO=1.8 V, VCC=3.0V, ILED=20mA/pcs, Ta = 25℃

Optical Characteristics								
Parameter		symbol	condition	MIN	TYP	MAX	unit	Remark
Transmissive mode								
Brightness		Br	θ=0°	△2 370	△2 470	-	cd/m²	Note1,2
Contrast ratio		T-Co	θ=0°	△2 450	△2 650	-	-	Note1,2,3
Viewing Angle		θ11	Co > 5	70	80	-	deg	Note1,3
		θ12		70	80	-		
		θ21		70	80	-		
		θ22		70	80	-		
Response Time	Rise	τr1	θ=0°	-	11	22	ms	Note1,2,4
	Decay	τd1		-	24	48	ms	
White chromaticity		x	θ=0°	0.25	0.30	0.35	-	Note.1,2
		y		0.27	0.32	0.37	-	
Red chromaticity		x	θ=0°	0.59	0.64	0.69	-	
		y		0.29	0.34	0.39	-	
Green chromaticity		x	θ=0°	0.21	0.26	0.31	-	
		y		0.65	0.70	0.75	-	
Blue chromaticity		x	θ=0°	0.09	0.14	0.19	-	
		y		0.01	0.03	0.08	-	
Uniformity		-	θ=0°	80	-	-	%	Note.1, 2, 5
NTSC ratio		-	θ=0°	80	90	-	%	Note.1, 2
Color Temperature		-	θ=0°	5000	-	9000	K	Note.1, 2
Flicker ratio		-	θ=0°	-	-	10(*1)	%	Note.6

Note 6): Measuring condition

- ·Measuring systems: YOKOGAWA 3298_01 + 3298_11
- ·Temperature = 25℃(±3℃), Frame Frequency = 62Hz (+/-5%),
  LED back-light: ON, Environment brightness < 150 lx, Sampling Frequency = 30Hz
- ·Measuring pattern : Horizontal stripe pattern <black (V0) / gray(V127) / black (V0) /gray (V127)…>
- ·Measuring point : At the center of display area.
- ·Measured sample : New sample before a long term aging.
- ·Flicker ratio is very sensitive to measuring condition.

Note 1) Definition of range of visual angle

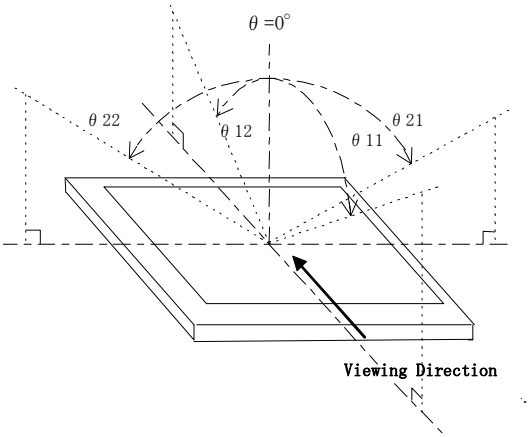

Fig .3 Definition of viewing angle

Note 2) Brightness, Contrast ratio, Viewing Angle, Response Time, Chromaticity,Uniformity, NTSC ratio, Color Temperature are measured as shown in Fig.3, and Brightness defined as the brightness of all pixels "White" at the center of display area on optimum contrast.

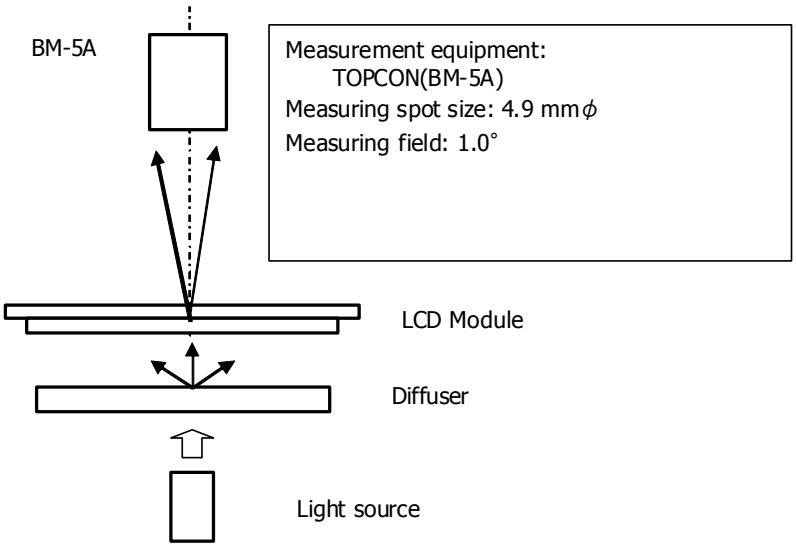

Fig. 4 Optical characteristics Test Method (Brightness)

Note 3) Contrast ratio is defined as follows:

$$\text{Transmissive mode Contrast} = \frac{\text{Brightness of all white pattern}}{\text{Brightness of standard black plate}}$$

Note 4) Response time is defined as follows:

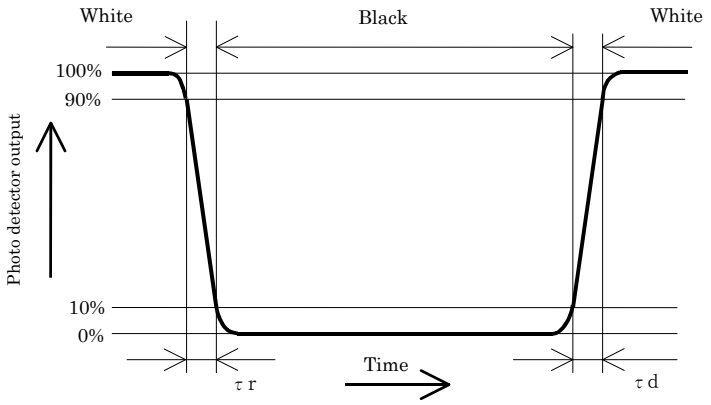

Fig. 5 Response time

Note 5) Uniformity is defined as follows:

$$\text{Uniformity} = \frac{\text{Minimum Luminance(brightness) in 9 points}}{\text{Maximum Luminance(brightness) in 9 points}}$$

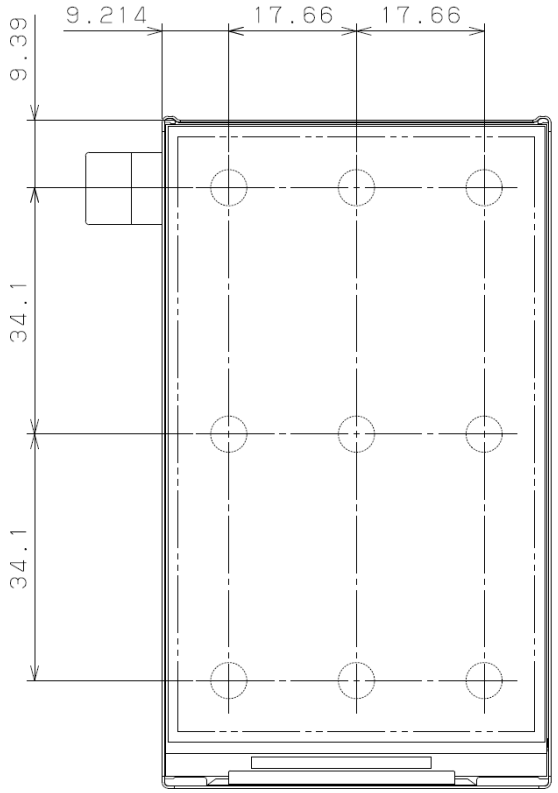

Fig. 6 Measuring Point

7. Reliability

Table. 13

No.	Test	Condition	Judgment criteria
1	Temperature Cycling	-30℃ → 80℃ → -30℃ … 60min (3min) 60min (3min) 60min 10cycle	Per table in below
2	High Temp. Storage	Ta=80℃ 96h	Per table in below
3	Low Temp. Storage	Ta=-30℃ 96h	Per table in below
4	Humidity Operation	Ta=60℃ 90%RH 96h	Per table in below (polarizer discoloration is excluded)
5	High Temp. Operation	Ta=70℃ 96h	Per table in below
6	Low Temp. Operation	Ta=-20℃ 96h	Per table in below
7	ESD	Discharge resistance: 0 Ω Discharge capacitor: 200 pF Discharge voltage: ±200 V Max Discharge 1 time to each input line ※ "GND" of display module is connected GND of test system ground.	Per table in below

INSPECTION	CRITERION(after test)
Appearance	No Crack on the FPC, on the LCD Panel
Alignment of LCD Panel	No Bubbles in the LCD Panel No other Defects of Alignment in Active area
Electrical current	Within device specifications
Function / Display	No Broken Circuit, No Short Circuit or No Black line No Other Defects of Display

8. Mechanical strength (*1,*2,*3)

Table. 14

Mechanical strength	MIN	TYP	MAX	Unit	Remark
3 Point Bending	5.5	—	—	Kgf	Note.1)
COG Constant Pushing	2.0	—	—	Kgf	Note.2)

※Testing condition
- ·Testing systems:
- ·Temperature = 25℃(±3℃)
- ·Non operation
- ·Measured sample : New sample before a long term aging.

*1. Mechanical Strength specification shall be out of LG Electronics's incoming inspection standard and not applicable to AQL.

*2. Above specification are meaning of the typical lowest values gotten from actual measurement at sampling test.

*3. If there are a lot of samples which doesn't meet the specifications in the standard sampling test, Sharp & LG have discussions how to proceed in each case.

Note.1) 3 Point Bending Test is measured as follows
The strength of 3 Point Bending is defined as the load of Pushing Bar at when LCD glass is broken.

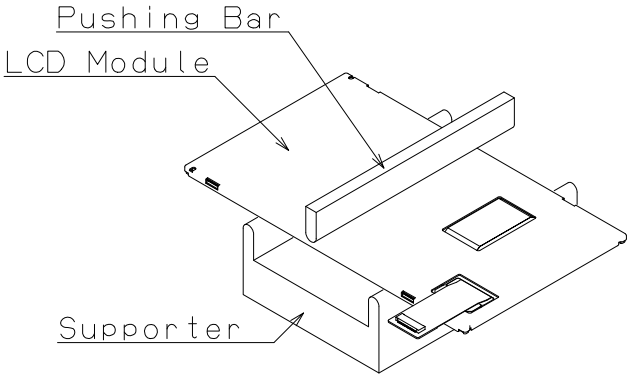

Fig. 7 3Point Bending Test

(Test condition)

Pushing Bar:

Tip shape：Φ3mm（round shape）

Sweep Speed：3mm/min

Material：Aluminum or Steel

Position： Fig. 7

Supporter

Tip shape：Φ3mm(round shape)

Pitch：36mm

Material：Aluminum or Steel

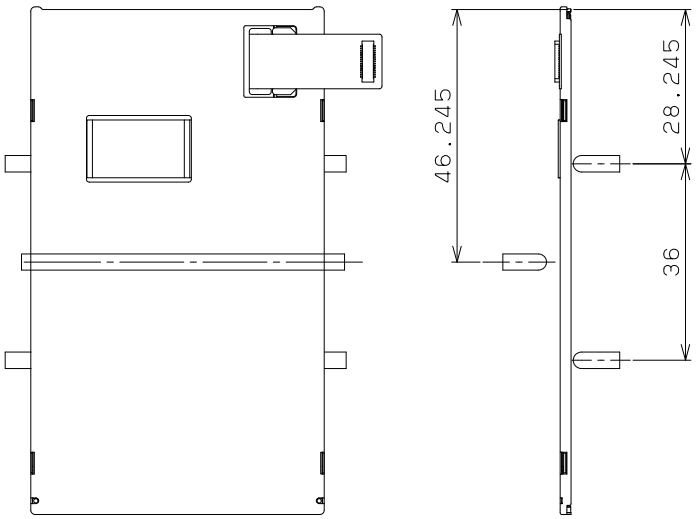

Fig. 8 Test Position

Note.2) COG Constant Pushing Test is measured as follows

The strength of COG Constant Pushing is defined as

the load of Pushing Rod at when LCD glass or driver IC is broken.

(Test condition)

Pushing Rod:

Tip diameter：Φ5mm（flat shape）

Sweep Speed：3mm/min

Material：Aluminum or Steel

Position：Fig. 9

Supporter

Tip shape：Flat shape

Pitch：30mm

Material：Aluminum or Steel

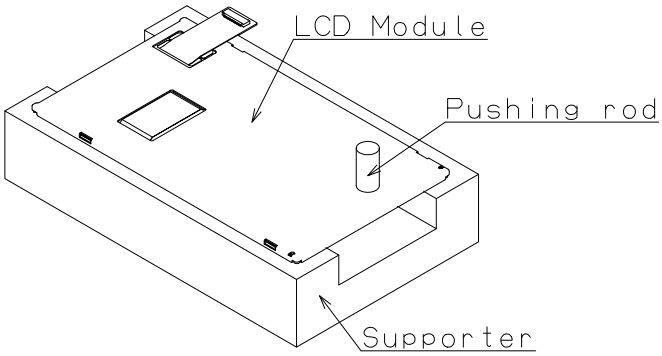

Fig. 9-1 COG Constant Pushing Test

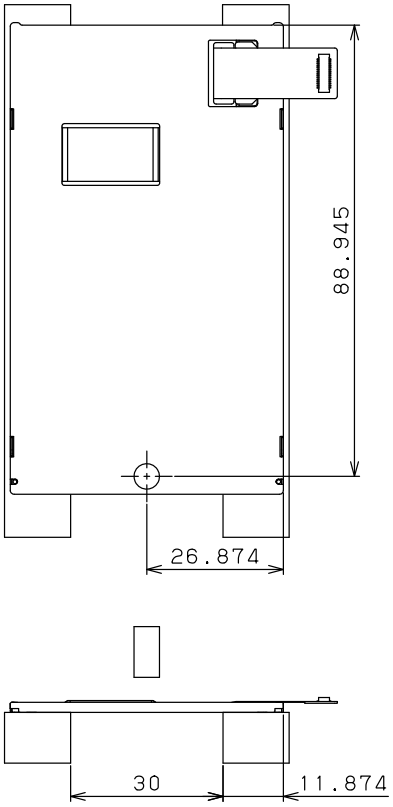

Fig. 9-2 Test Position

9. Packaging specifications

(9-1) Details of packaging

1) Packaging materials: Table.16
2) Packaging style : Fig. 10, 11

(9-2) Reliability

1) Vibration test

Table.15

Item	Test			
Frequency	5 Hz to 50 Hz (3 minutes cycle)			
Direction	Up-Down, Left-Right, Front-Back (3 directions)			
Period	Up-Down	Left-Right	Front-Back	Total
	60min	15min	15min	90min

The frequency should start at 5 Hz and vary continuously.

Total amplitude	20mm	0.2mm	20mm	0.2mm	
Frequency	5 Hz	50 Hz	5 Hz	50 Hz	(For 9.8m/s^2)

○ ○ ○

← 3 minutes →

2) Drop test

Drop height: 750mm

Number of drop: 10 times (Drop sequence: 1 corner, 3 edges, 6 faces)

(9-3) Packaging quantities

320 modules per master carton

(9-4) Packaging weight

About 11 kg

(9-5) Packaging outline dimensions

360 mm×525 mm×225 mm (H)

(Packaging materials) Table.16

	Parts name	Materials
1	Master carton	Corrugate card board
2	Inside sleeve	Corrugate card board
3	Outside sleeve	Corrugate card board
4	Tray for packaging	Polystyrene with anti-static treatment + anti-static polystyrene
5	Protective bag	Polyethylene with anti-static treatment
6	OPP tape	Polypropylene
7	Bar code label	Anti-static polyethylene

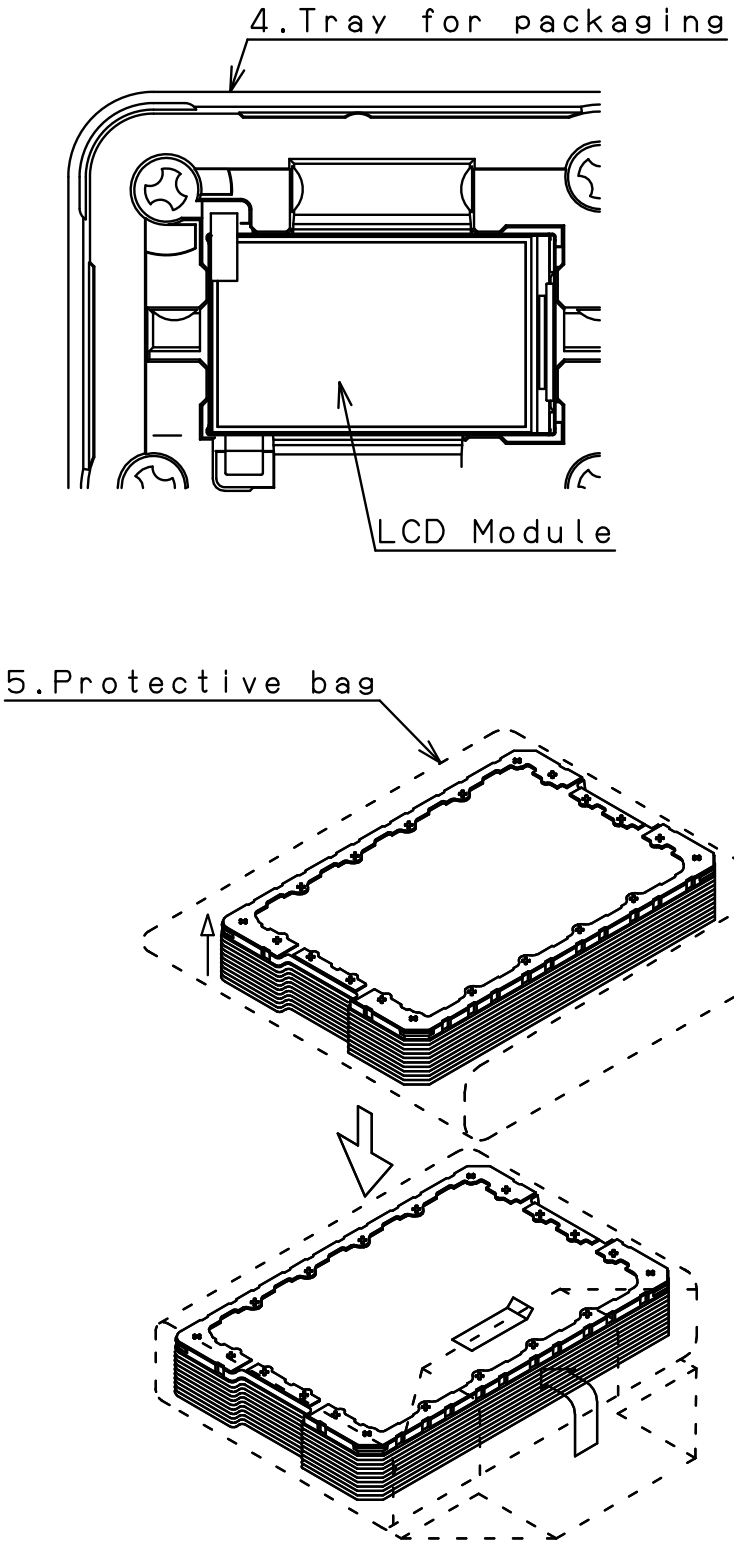

Fig.10 Packaging style (Tray for packaging)

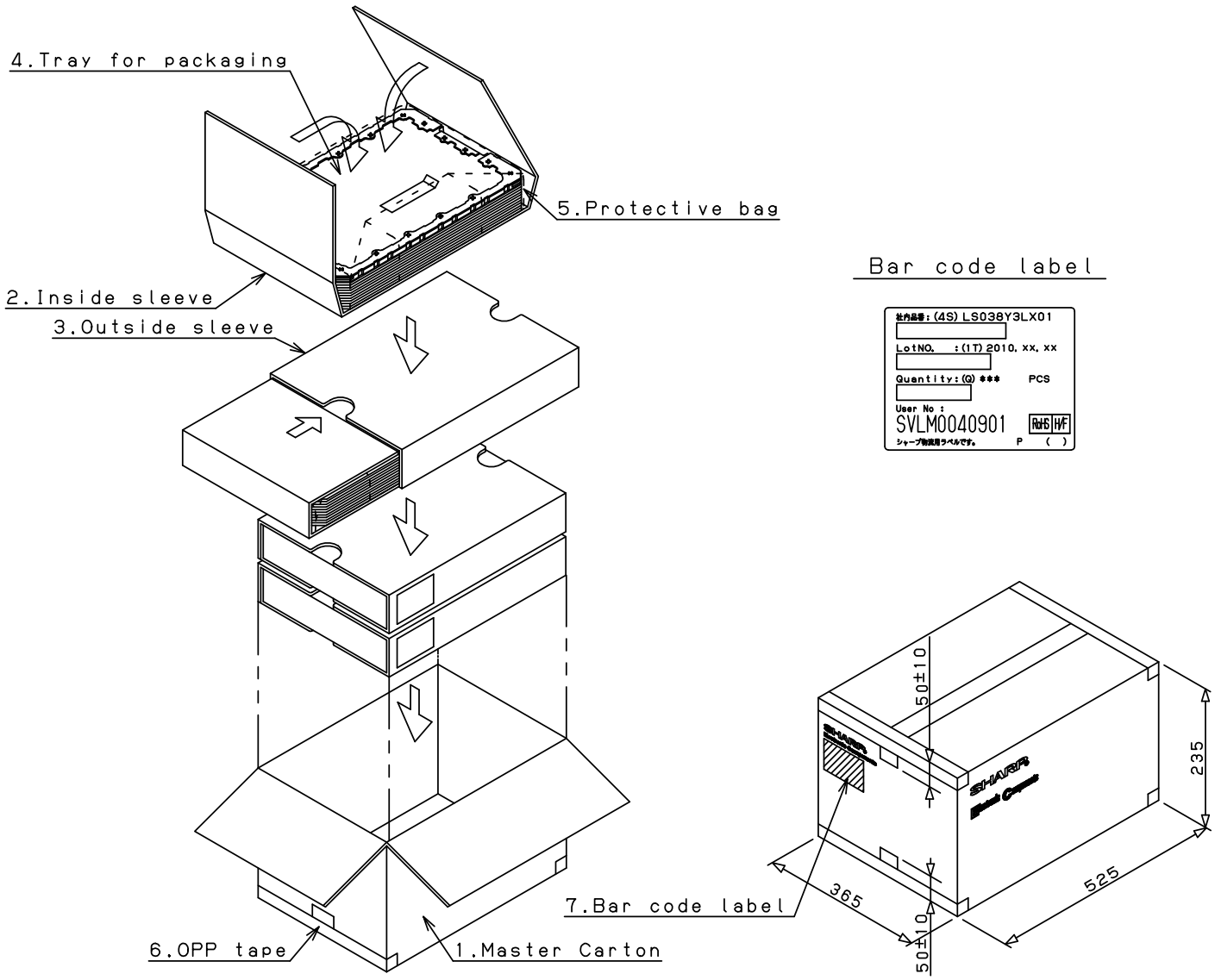

Fig. 11 Packaging style (Master carton for packaging)

10. Initial Sequence

Condition

I/F: MDDI
Dots Size : 480 x RGB x 800
VCC=3.0V, VDDIO=1.8V
Color Mode:24bit
Frame frequency :TYP 62Hz

POWER ON Sequence

ITEM	Command or Parameter	HEX	REMARK
VDDIO=1.8V			
VCC=3.0V			
WAIT 5ms (for power stable)			
HW RESET (Low pulse Min 30us)			
WAIT 5ms (Command issue prohibit period)			
Host initializes Wake-up (Set Sub-frame Header packet)			
WAIT 5ms			
Level2 Command Control Test Key2	Command	F1h	
	1st parameter	5Ah	
	2nd parameter	5Ah	
Clock Control 3	Command	B7h	
	1st parameter	00h	
	2nd parameter	11h	
	3rd parameter	11h	
Resolution & Interface Select Control	Command	B8h	
	1st parameter	2Ch	480*800 Portrait
	2nd parameter	02h	
Panel case & DSI Pad Control	Command	B9h	
	1st parameter	00h	
	2nd parameter	06h	
TEON	Command	35h	
	1st parameter	00h	
Level2 Command Control Test Key2	Command	F1h	
	1st parameter	A5h	
	2nd parameter	A5h	
Column Address Set	Command	2Ah	
	1st parameter	00h	
	2nd parameter	00h	
	3rd parameter	01h	
	4th parameter	DFh	
Column Address Set	Command	2Bh	
	1st parameter	00h	
	2nd parameter	00h	
	3rd parameter	03h	
	4th parameter	1Fh	
Set manual brightness	Command	51h	
	1st parameter	00h	
Turn on Back light control	Command	53h	
	1st parameter	24h	
Write MIE Mode	Command	55h	
	1st parameter	00h	
SLEEP OUT	Command	11h	
WAIT 120ms			
Send video stream package (black)		**h	
Display On	Command	29h	
WAIT 50ms			
Set manual brightness	Command	51h	
	1st parameter	FFh	
Send video stream package (normal)		**h	

POWER OFF Sequence

ITEM	Command or Parameter	HEX	REMARK
Display Off	Command	28h	
SLEEP IN	Command	10h	
MDDI Shut Down			
VCC=GND			
VDDIO=GND			

SLEEP IN Sequence

ITEM	Command or Parameter	HEX	REMARK
Display Off	Command	28h	
SLEEP IN	Command	10h	
MDDI Shut Down			

SLEEP OUT Sequence

ITEM	Command or Parameter	HEX	REMARK
SLEEP Out	Command	11h	
WAIT 120ms			
Display On	Command	29h	

11. Parts List

Table

PARTS CODE	SPECIFICATION	SIZE	VENDOR
LCD	480XRGBx800	"3.77"	SHARP
Polarizer	-	-	Nitto Denko
Driver LSI	S6D16A0X22	-	SAMSUNG
Back Light	-	-	Konsan Ways
FPC	2layer	-	Daeduck GDS
D1~8	NSSW206AT	-	NICHIA
Connector	GB042-30P-H10-E3000	-	LSMtron
D9	RB521CS-30GT2R	-	Rohm
C1	No Mount	-	-
C2	No Mount	-	-
C3	1uF/16V	1005	TAIYO/MURATA/KYOCERA
C4	1uF/16V	1005	TAIYO/MURATA/KYOCERA
C5	1uF/16V	1005	TAIYO/MURATA/KYOCERA
C6	1uF/16V	1005	TAIYO/MURATA/KYOCERA
C7	1uF/16V	1005	TAIYO/MURATA/KYOCERA
C8	1uF/16V	1005	TAIYO/MURATA/KYOCERA
C9	1uF/10V	1005	TAIYO/MURATA/KYOCERA
C10	1uF/10V	1005	TAIYO/MURATA/KYOCERA
C11	1uF/6.3V	1005	TAIYO/MURATA/KYOCERA
C12	1uF/6.3V	1005	TAIYO/MURATA/KYOCERA
C13	1uF/6.3V	1005	TAIYO/MURATA/KYOCERA
C14	1uF/10V	1005	TAIYO/MURATA/KYOCERA
C15	1uF/6.3V	1005	TAIYO/MURATA/KYOCERA
C16	1uF/6.3V	1005	TAIYO/MURATA/KYOCERA
C17	1uF/6.3V	1005	TAIYO/MURATA/KYOCERA
C18	1uF/6.3V	1005	TAIYO/MURATA/KYOCERA
C19	1uF/6.3V	1005	TAIYO/MURATA/KYOCERA
C20	1uF/6.3V	1005	TAIYO/MURATA/KYOCERA
C21	1uF/10V	1005	TAIYO/MURATA/KYOCERA
C22	1uF/6.3V	1005	TAIYO/MURATA/KYOCERA
C23	1uF/6.3V	1005	TAIYO/MURATA/KYOCERA
C24	1uF/6.3V	1005	TAIYO/MURATA/KYOCERA
C25	2.2uF/6.3V	1005	TAIYO/MURATA/KYOCERA
C26	0.1uF/10V	1005	TAIYO/MURATA/KYOCERA
C27	No Mount	-	-
C28	0.1uF/10V	1005	TAIYO/MURATA/KYOCERA
C29	0.1uF/10V	1005	TAIYO/MURATA/KYOCERA
C30	0.1uF/10V	1005	TAIYO/MURATA/KYOCERA
C31	0.1uF/10V	1005	TAIYO/MURATA/KYOCERA
C32	0.1uF/10V	1005	TAIYO/MURATA/KYOCERA
C33	0.1uF/10V	1005	TAIYO/MURATA/KYOCERA
C34	0.1uF/10V	1005	TAIYO/MURATA/KYOCERA
C100	1uF/6.3V	1005	TAIYO/MURATA/KYOCERA
C101	1uF/6.3V	1005	TAIYO/MURATA/KYOCERA
R1	100 ohm	1005	Rohm
R2	100 ohm	1005	Rohm

△1

12. FPC art work

(12-1) LCD FPC Layer 1

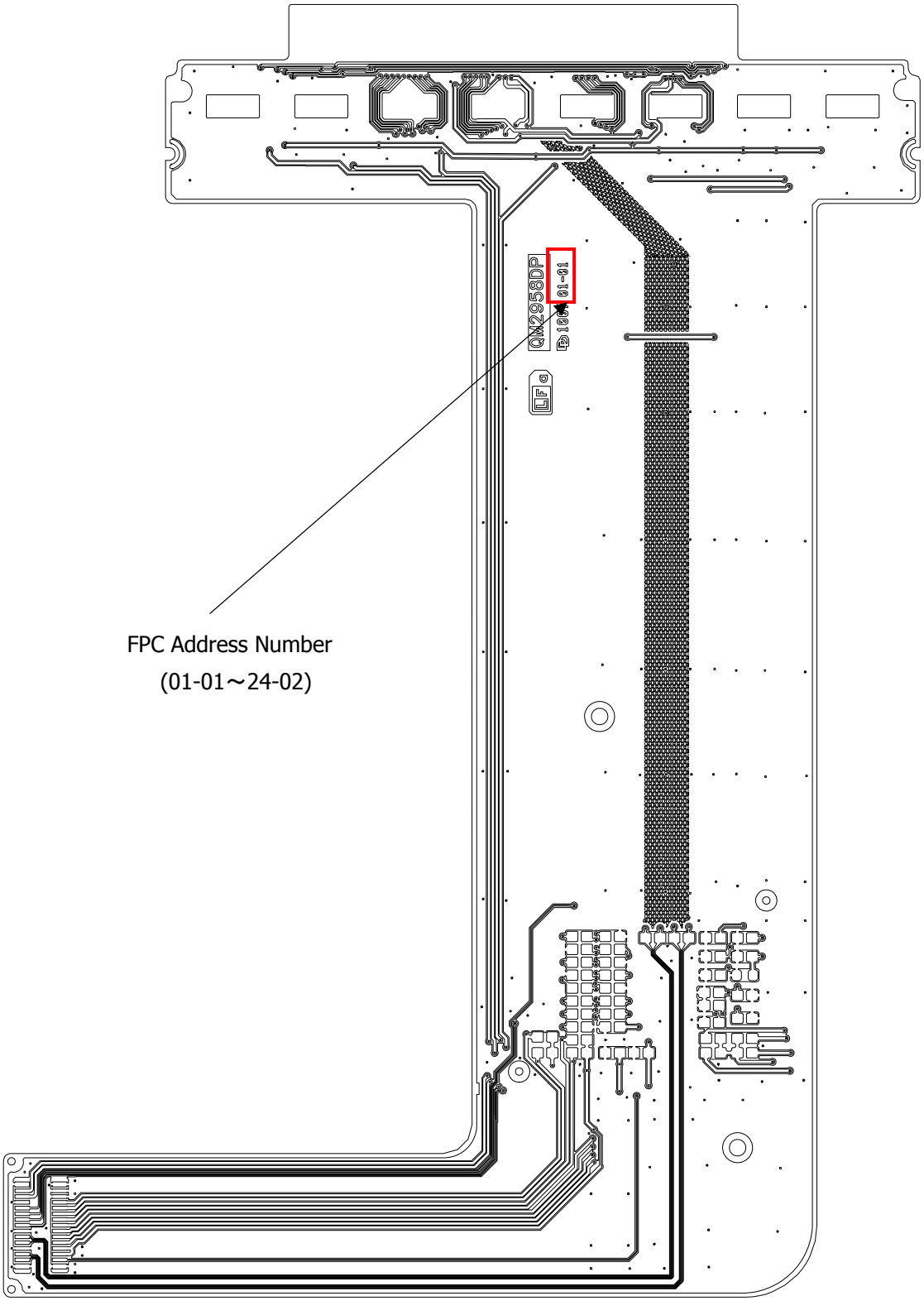

Fig. 12 LCD FPC Layer 1

(12-2) LCD FPC Layer 2

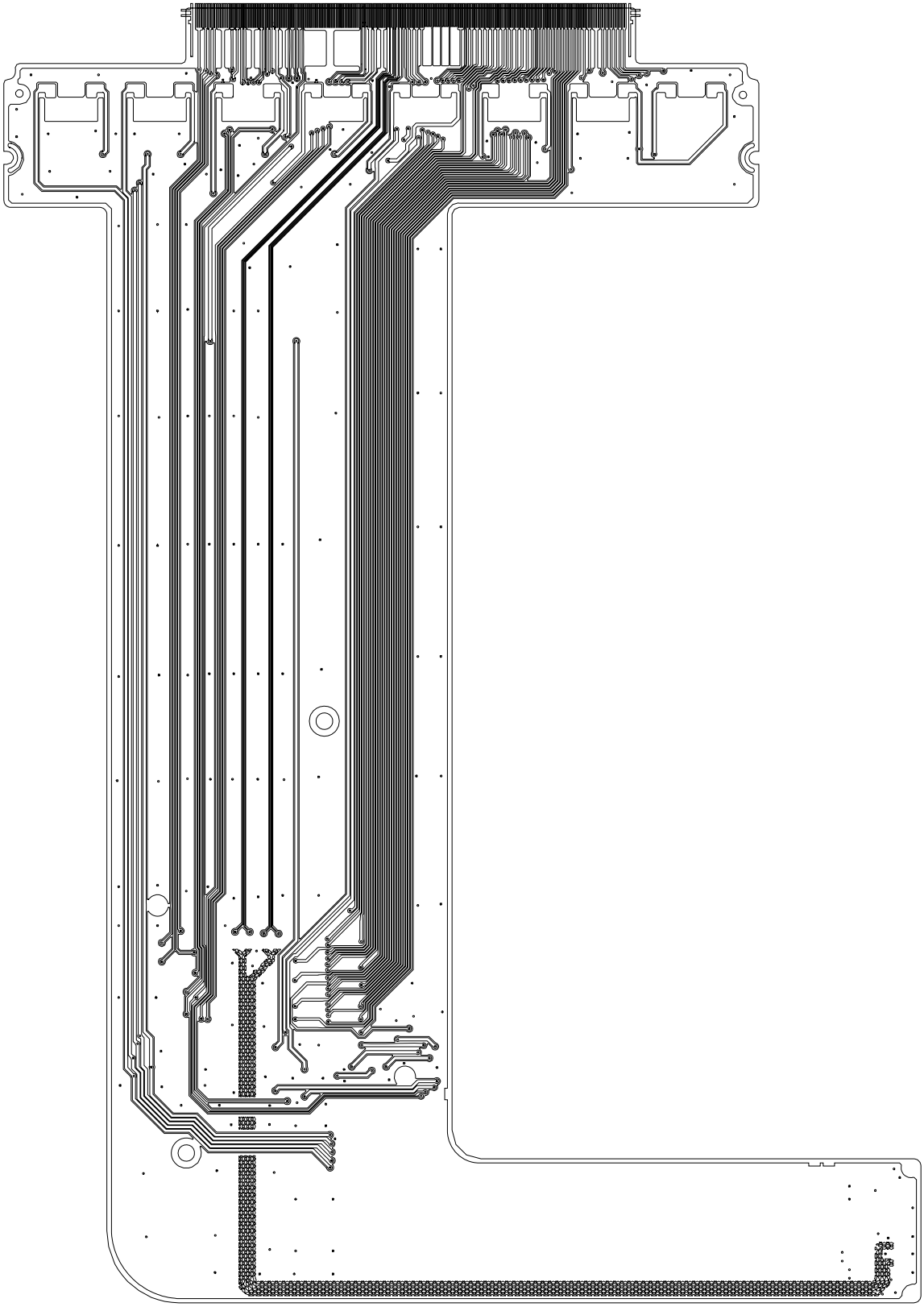

Fig. 13 LCD FPC Layer 2

(12-3) LCD FPC Parts layout of layer 1

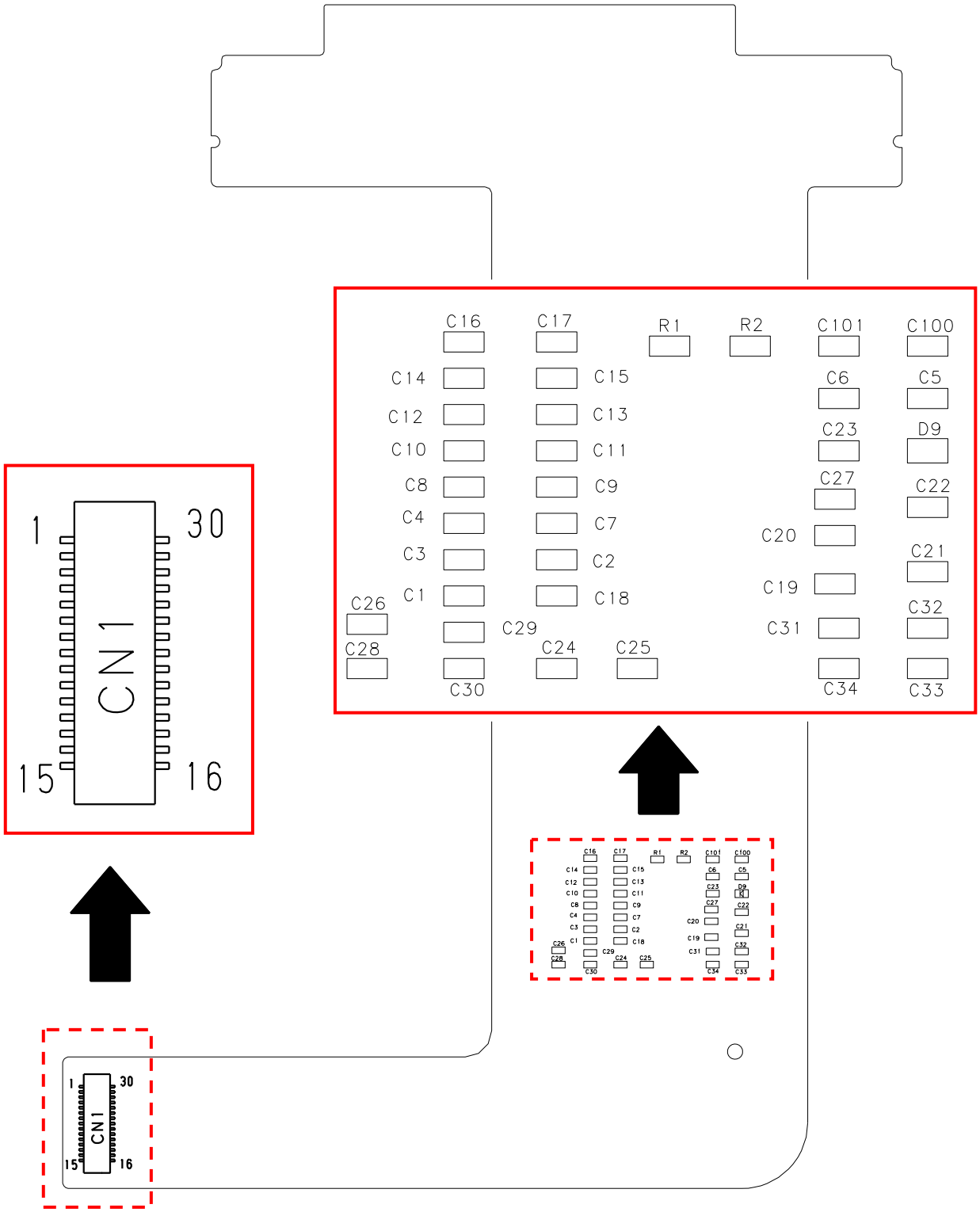

Fig. 14 LCD FPC Parts layout of Layer 1

(12-4) LCD FPC Parts layout of layer 2

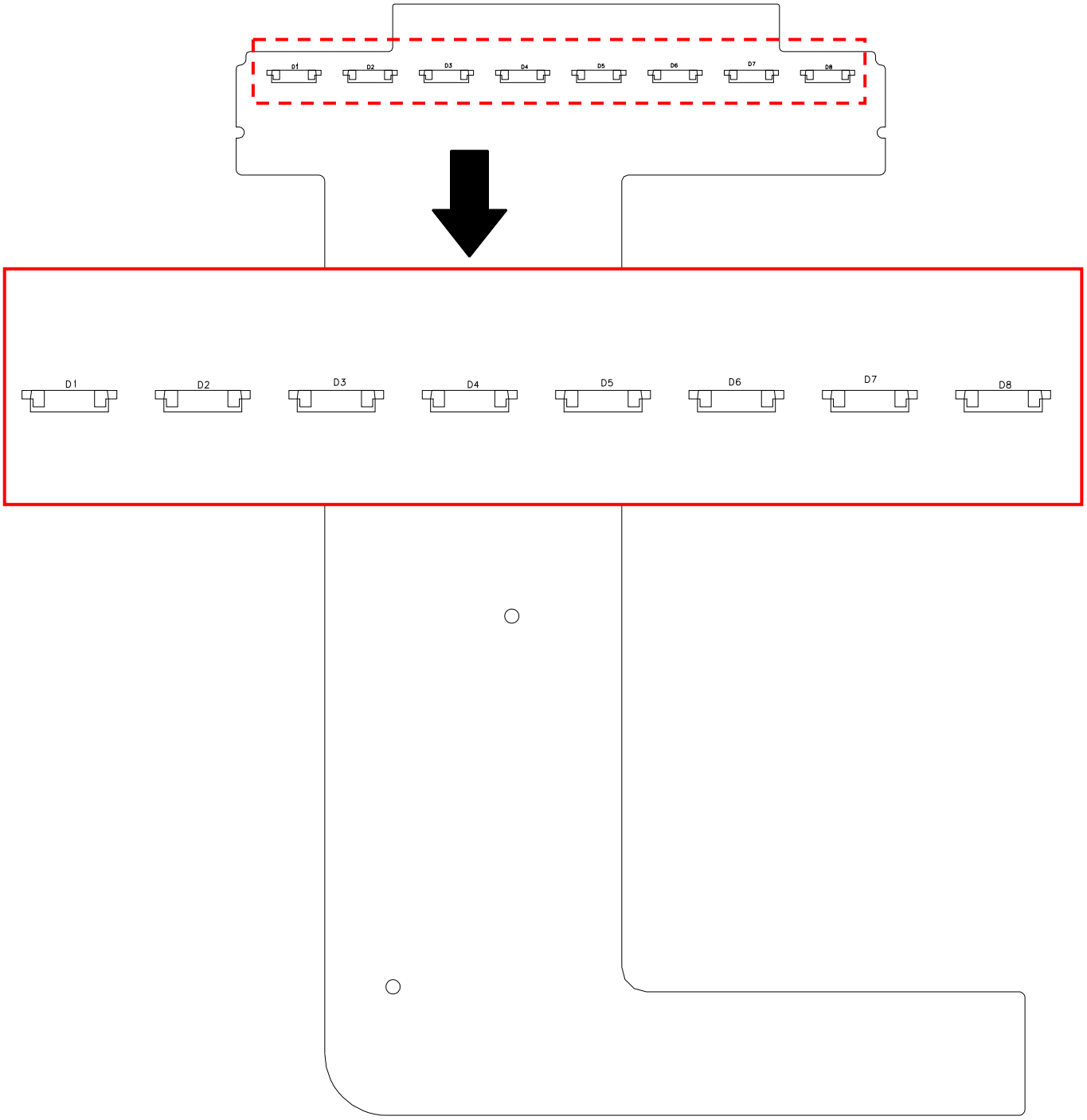

Fig. 15 LCD FPC Parts layout of Layer 2

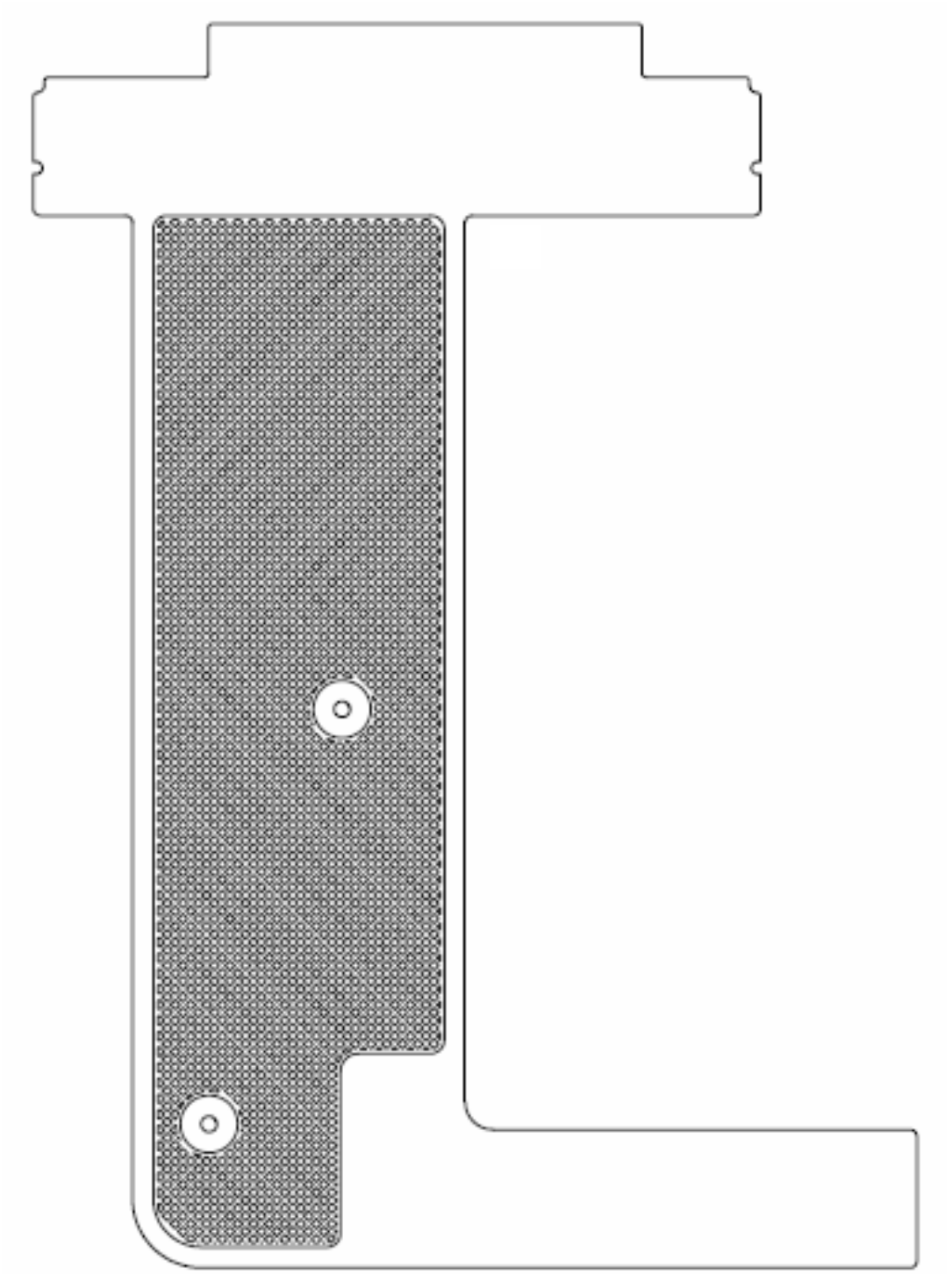

Fig. 16 Part layout of layer 2（Silk Print）

13. Circuit diagram

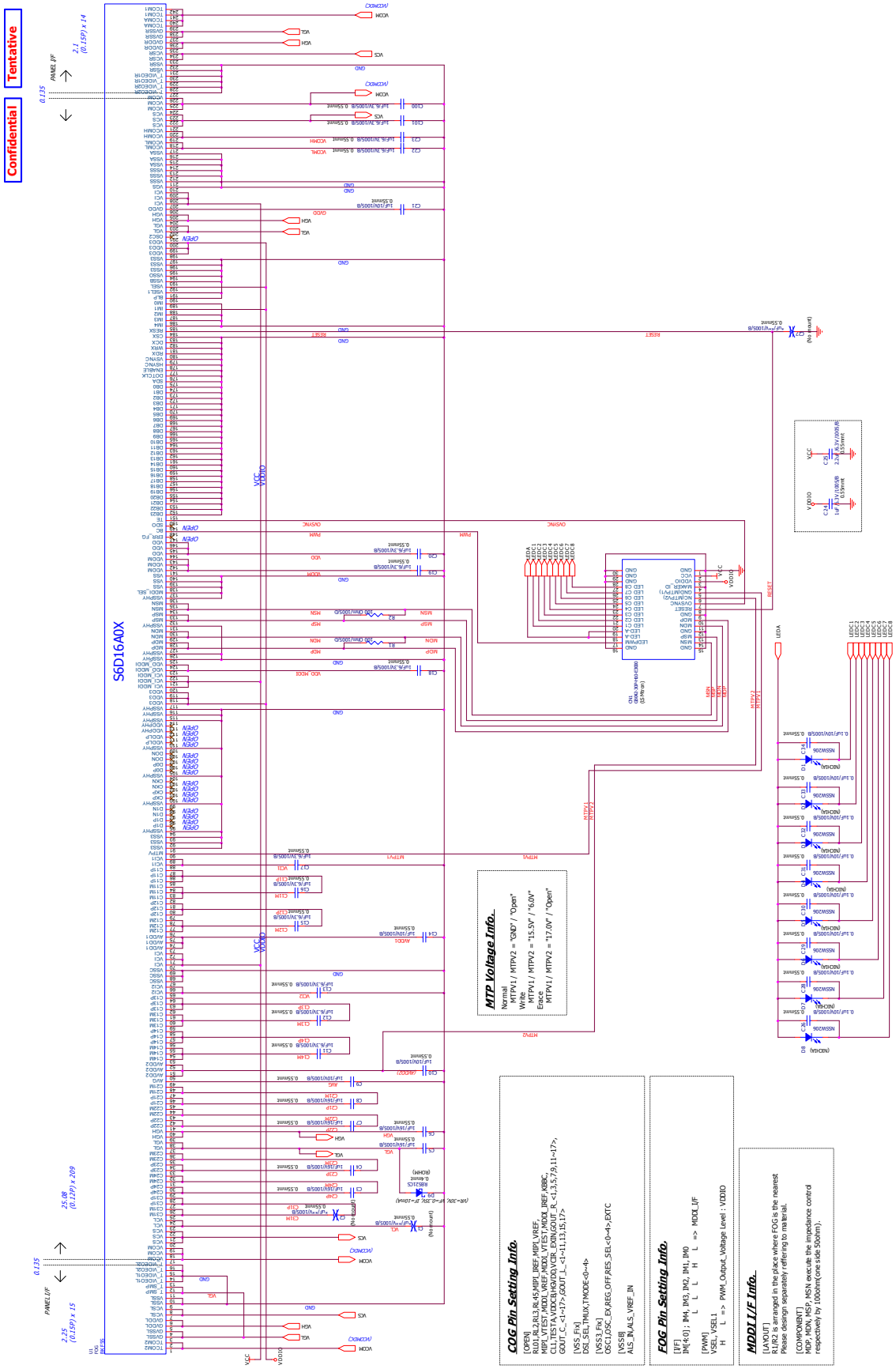

Fig. 17 Circuit diagram

14. Serial Number Label identification

Numbering is specified as follows.

Numbering is specified as follows.

9 01 Z 000001 A Q

① ② ③ ④ ⑤ ⑥

① product year (lower 1 digits)

9: 2009

0: 2010

② product week

01 ～ 52 or 53

③ Line number

A ～ Z, 0 ～ 9

④ serial number

000001 ～ 999999, A00001 ～ Z99999

⑤ Version number

⑥ factory code

15. LCD Module Code Rule

LS 038 Y 3 L X 01

① ② ③ ④ ⑤ ⑥ ⑦

①Parts type

CGS LCD

②Active area size

3.8inch

③Dot format

WVGA format

④LCD type

Transmitting

⑤Interface type

MDDI interface

⑥LCD viewing type

wide viewing angle

⑦Serial Code

16. Outline dimensions

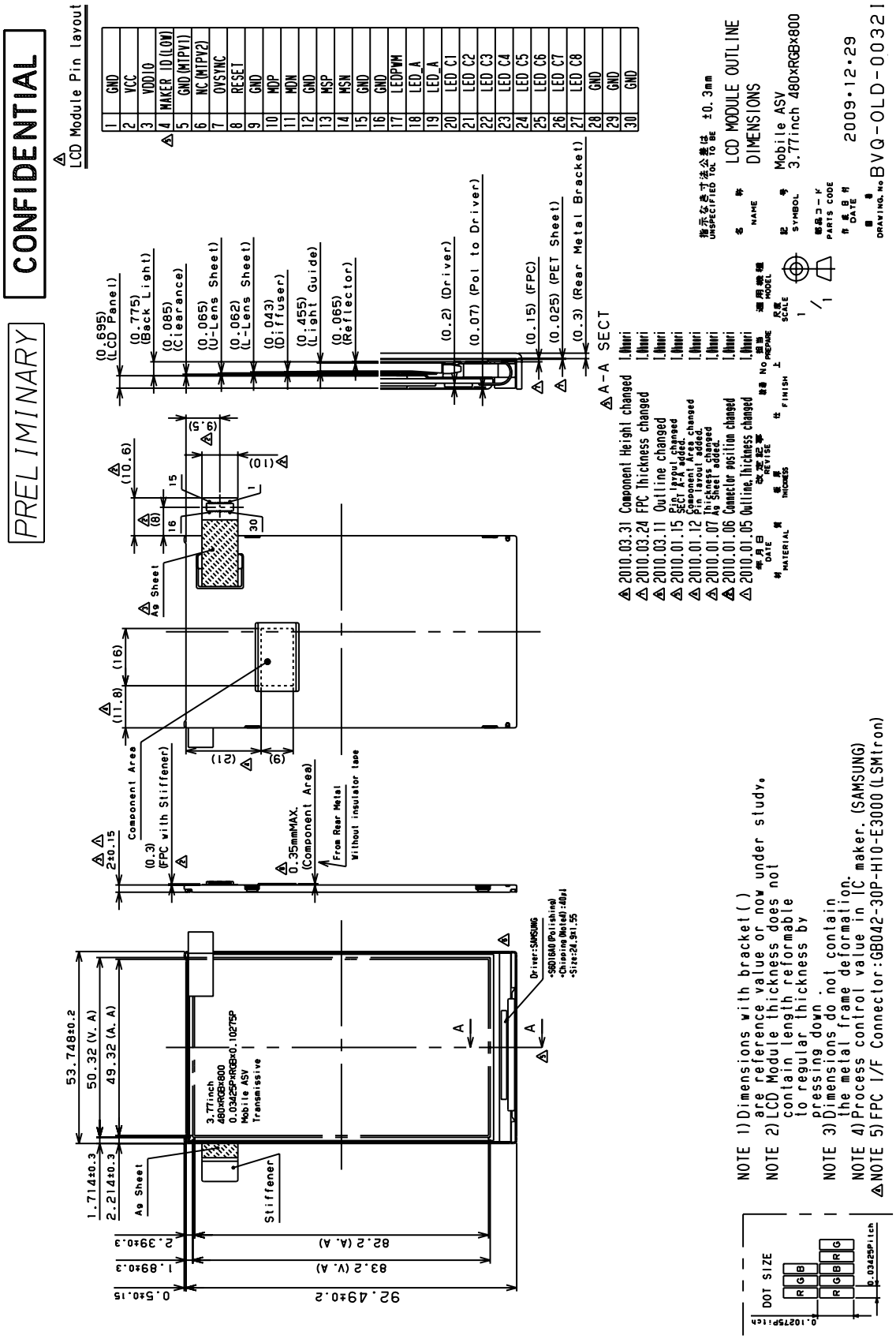

Fig. 18 Outline dimensions

18. Panel dimensions

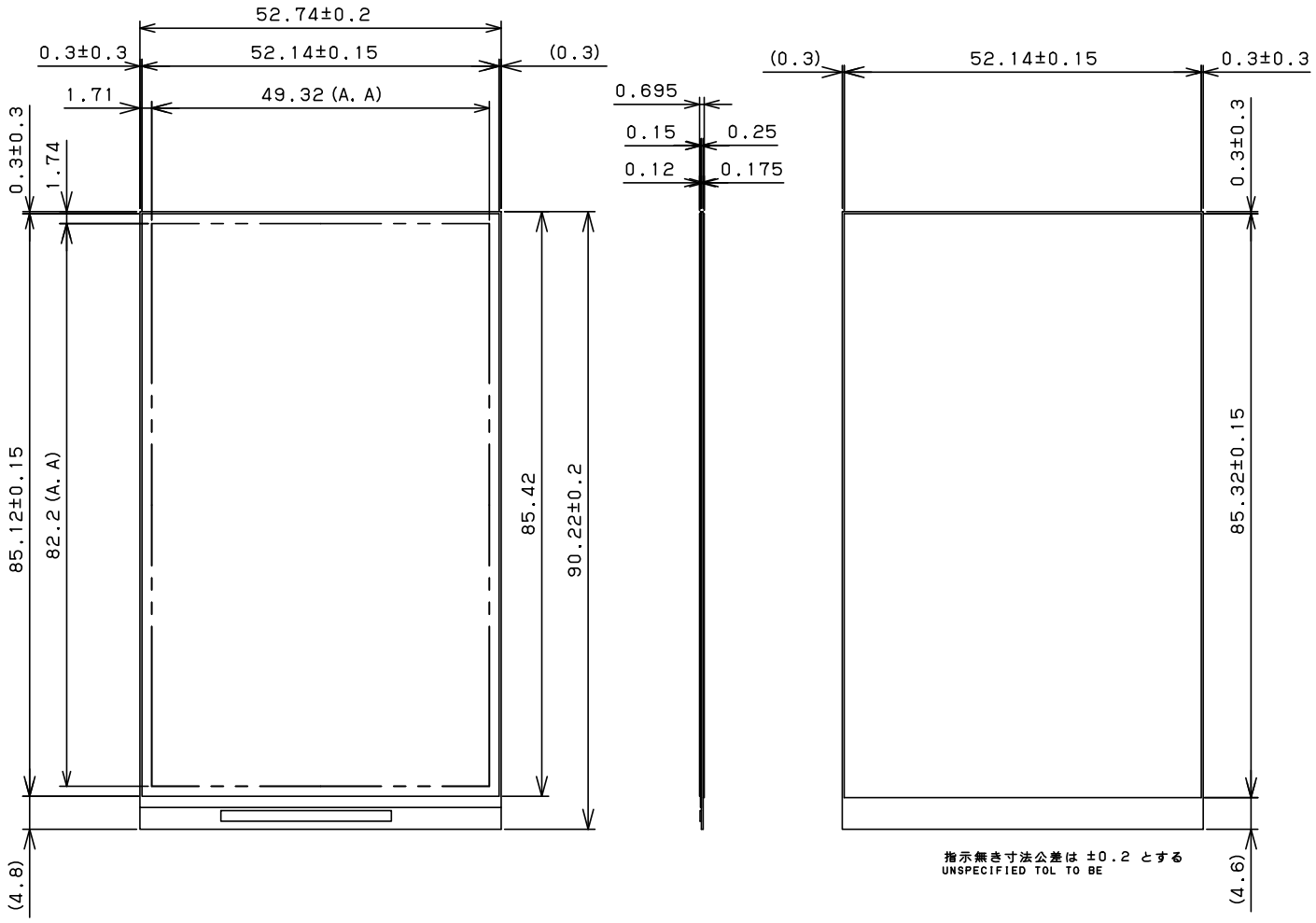

Fig. 19 Panel dimensions

19. Backlight unit dimensions

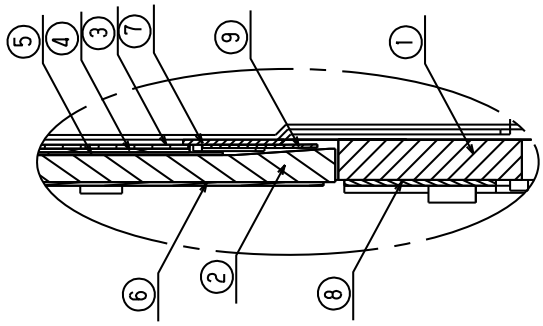

DETAIL A
SCALE=4:1

NO	PART NAME
0	ASSY-B/L
1	Frame Mold
2	LGP
3	SHEET-PRISM(U)
4	SHEET-PRISM(L)
5	SHEET-DIFFUSER
6	SHEET-REFLECTOR
7	SHEET-PANEL
8	TAPE-FPC
9	TAPE-1

GENERAL TOLERANCE	
0 < X ≦ 4	± 0.1
4 < X ≦ 16	± 0.15
16 < X ≦ 64	± 0.25

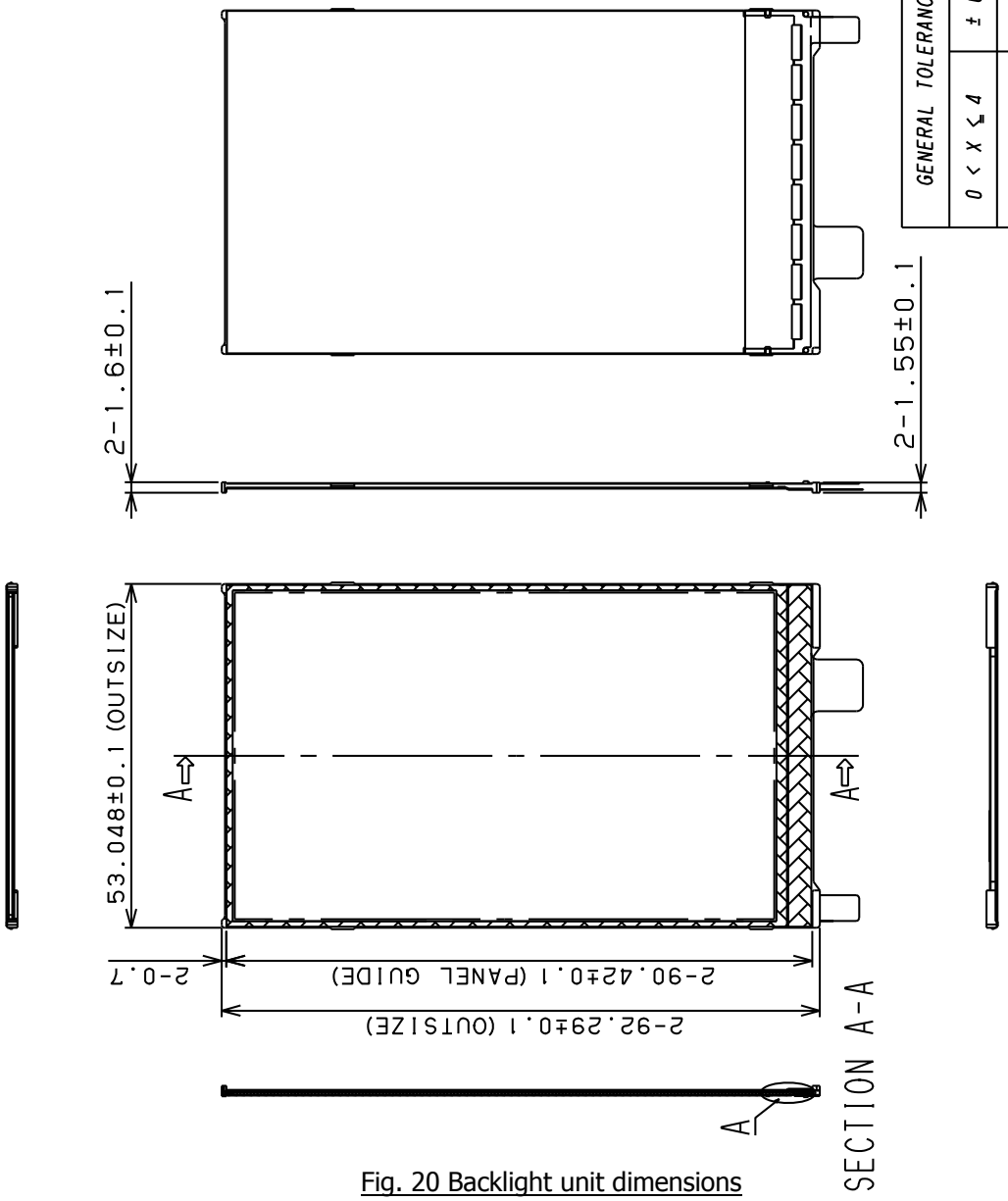

Fig. 20 Backlight unit dimensions

APPENDIX

A1. LCD Driver Chipping spec

*Specification of LCD driver

Item	Inspection criteria (Acceptable level)
Depth of chip	D<40um

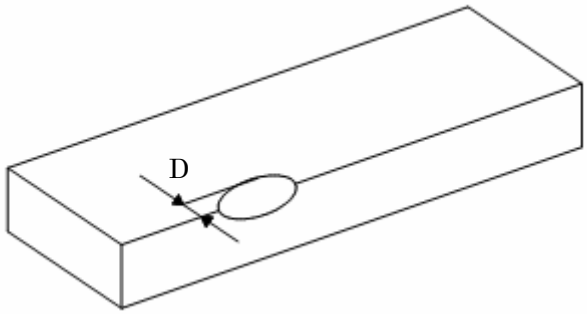

A2. Glass edge crack / chip

Items	Inspection criteria (Acceptable level)	note
Chip on glass corner (Part A)	L <= 5mm , D <= 1mm L + D <= 5mm *BM (black mask) is not affected.	Fig.1-A fig.2
Chip on the terminal glass (Part B)	L <= 3mm , D <= 3mm *FPC and patterns are not affected	fig.1-B fig.2
Chip on glass edge	L <= 10mm , D <= 1mm *BM (black mask) is not affected	fig.3