Technical Document

LCD Specification

LCD Group

LS060S2UD01 LCD Module

Product Specification
March 2010

SVGA (Portrait) Monochrome HR-TFT Transflective Memory LCD featuring FPC connector, 16% reflectivity with 15:1 contrast.

SHARP

PREPARED BY: DATE A. Kiyohara : March. 3. 2010	SHARP	SPEC No. LCP-1310002
		FILE No.
APPROVED BY: DATE M. Inoue : Maarch. 4. 2010	MOBILE LIQUID CRYSTAL DISPLAY GROUP SHARP CORPORATION	ISSUE March. 3. 2010
		PAGE Pages 18
	SPECIFICATION	APPLICABLE DIVISION ENGINEERING DEPARTMENT III MOBILE LCD DIVISION I MOBILE LCD GROUP

DEVICE SPECIFICATION for
TFT LCD Module
(600 × 2 × 800 dots)

Model No.

LS060S2UD01

CUSTOMER'S APPROVAL

DATE _____

BY _____

PRESENTED BY Masami Inoue

MASAMI.INOUE

ASSISTANT DEPARTMENT GENERAL MANAGER
ENGINEERING DEPARTMENT III
MOBILE LCD DIVISION I
MOBILE LCD GROUP
SHARP CORPORATION

RECORDS OF REVISION

MODEL No : LS060S2UD01

SPEC No.	Date	NO.	PAGE	SUMMARY	NOTE
LCP-1310002	2010.03.03	-	-	-	1st Issue

NOTICE

The application circuit examples in this publication are provided to explain the representative applications of SHARP's devices and are not intended to guarantee any circuit design or permit any industrial property right or other rights to be executed. SHARP takes no responsibility for any problems related to any industrial property right or a third party resulting from the use of SHARP's devices, except for those resulting directly from device manufacturing processes.

In the absence of confirmation by device specification sheets, SHARP takes no responsibility for any defects that occur in equipment using any of SHARP's devices, shown in catalogs, data books, etc. Contact SHARP in order to obtain the latest device specification sheets before using any SHARP's device.

SHARP reserves the right to make changes in the specifications, characteristics, data, materials, structures and other contents described herein at any time without notice in order to improve design or reliability. Contact SHARP in order to obtain the latest specification sheets before using any SHARP's device. Manufacturing locations are also subject to change without notice.

Observe the following points when using any device in this publication. SHARP takes no responsibility for damage caused by improper use of the devices.

The devices in this publication are designed for use in general electronic equipment designs, such as:

·Personal computers ·Office automation ·Telecommunication equipment
·Test and measurement equipment ·Industrial control ·Personal digital assistant
·Audio visual and multimedia equipment ·Consumer electronics ·Smart phone
・e-book

The appropriate design measures should be taken to ensure reliability and safety when SHARP's devices are used for equipment such as:

·Transportation control and safety equipment (i.e., aircraft, trains, automobiles, etc.)
·Traffic signals ·Gas leakage sensor breakers
·Alarm equipment ·Various safety devices etc.

SHARP's devices shall not be used for equipment that requires extremely high level of reliability, such as:

·Military and space applications ·Nuclear power control equipment
·Medical equipment for life support

Contact a SHARP representative, in advance, when intending to use SHARP's devices for any "specific" applications other than those recommended by SHARP.

Contact and consult with a SHARP representative if there are any questions about the contents of this publication.

1. Applicable Scope

This specification is applicable to TFT-LCD Module “LS060S2UD01”.

2. Mechanical (Physical) Specifications

Table2-1

Item	Specifications	Unit	Remarks
Screen size	15.30 (6.02” type) Diagonal	cm	
Active area	91.8(H)×122.4(V)	mm	
Pixel format	600(H)×800(V)	pixel	
	1 Pixel =2 dots	–	
Pixel pitch	0.153(H)×0.153(V)	mm	
Display mode	Normally White	–	
Unit outline dimensions	96.8(W)× 132.8(H)× 1.23(D)	mm	
Mass	36	g	Panel module part

【Note2-1】The above-mentioned table indicates module sizes without some projections and FPC.

For detailed measurements and tolerances, please refer to Fig.1 Outline Dimensions.

3. Pixel Configuration

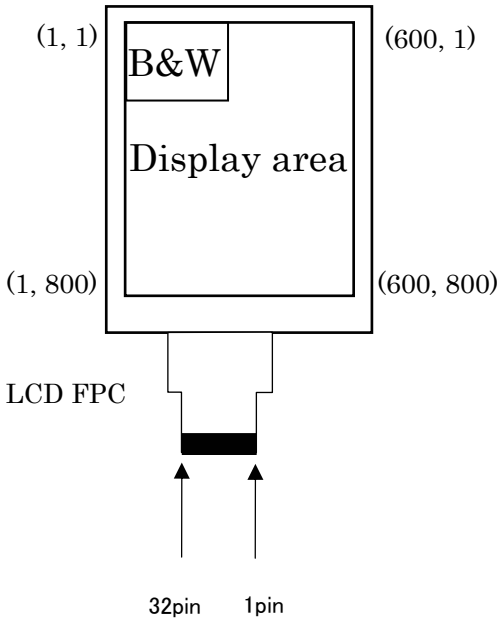

4. Input Terminal Names and Functions

Table4-1 (FPC: connector [HIROSE]FH19SC-32S-0.5)

Pin No.	Symbol	I/O	Description	Note
1	GND	-	Ground	
2	N.C.(VPP)	-	No Connection	
3	BUSSEL	I	Data bas selection signal	
4	RESETB	I	Reset signal(Active Low)	
5	CSB	I	Chip select signal	
6	RS	I	Display Data/Command selection signal	
7	WR	I	Wite Enable	
8	RD	I	Read Enable	
9	D00	I/O	Data bus 0	
10	D01	I/O	Data bus 1	
11	D02	I/O	Data bus 2	
12	D03	I/O	Data bus 3	
13	D04	I/O	Data bus 4	
14	D05	I/O	Data bus 5	
15	D06	I/O	Data bus 6	
16	D07	I/O	Data bus 7	
17	D08	I/O	Data bus 8	
18	D09	I/O	Data bus 9	
19	D10	I/O	Data bus 10	
20	D11	I/O	Data bus 11	
21	D12	I/O	Data bus 12	
22	D13	I/O	Data bus 13	
23	D14	I/O	Data bus 14	
24	D15	I/O	Data bus 15	
25	ACK	O	ACK signal output	※1
26	OVSYNC	O	Vertical synchronizing signal output	
27	N.C.(OTPTEST)	-	No Connection	
28	VDDL_EN	I	Power supply generation circuit enable (Active High)	※1
29	VDDIO	-	Power Supply	
30	VDD	-	Power Supply	
31	GND	-	Ground	
32	GND	-	Ground	

※1：Recommendation Circuit

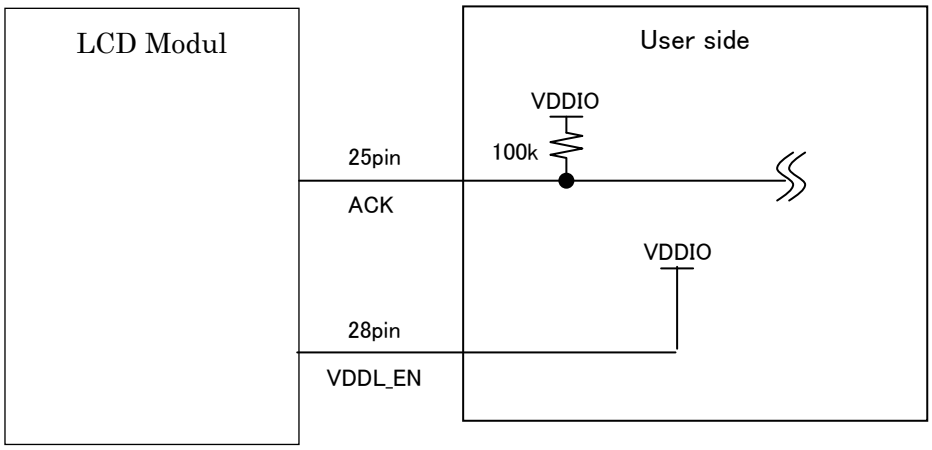

5.Absolute Maximum Ratings

Item	Symbol	Condition	Rated value	Unit	Remarks
Logic I/O power supply voltage	VCCIO	Ta = 25° C	-0.3 to +7.0	V	Note 1
Analog power supply voltage	VCI	Ta = 25° C	-0.3 to +7.0	V	Note 1
Temperature for storage	Tstg	-	-30 to +80	deg.	Note 2
Temperature for operation	Topr	-	-20 to +70	deg.	

Note 1) If used beyond the absolute maximum ratings, the LSI may permanently be damaged. It is strongly recommended to use the LSI under the condition within the electrical characteristics in normal operation. If exposed to the condition not within the electrical characteristics, it may affect the reliability of the device.

Note 2) Humidity: 80%RH Max. (Ta≤40° C)
Maximum bulb temperature under 39° C (Ta>40° C) See to it that no dew will be condensed.

6. Electrical Characteristics

6-1. DC characteristic

Table6-1 VDD=2.7～3.6V,VDDIO=1.65～3.6V,Ta=25℃

Item	Symbol	Condition	Min.	Typ.	Max.	Unit	Note
Input H Voltage	VIH		0.7×VDDIO	—	VDDIO	V	*1
Input L Voltage	VIL		0	—	0.3×VDDIO	V	*1
Input H Leak Current	IIH	VIN=VDDIO	-10	—	10	μA	*1
Input L Leak Current	IIL	VIN=VSS	-10	—	10	μA	*1
Host Interface Voltage	VDDIO		1.65	3.3	3.6	V	
Driver driving voltage	VDD		2.7	3.3	3.6	V	*2
Power Consumption		Standy Mode		0.1		mW	*3,4
		Still image		2.1		mW	*3
		1Re-write/30s		2.2		mW	*3
		30fps Movie		24		mW	*3

*1：Application terminal RESETB, CSB, RS, WR, RD, D[15:00]

*2：When voltage is Typ. 2.7～3.3V at "start Sequence", it is necessary to input "the following Command" before input "Normal Command".

Command：68h Parameter：00h

*3：VDD=VDDIO=3.3V,Ta=25℃

*4：Displey OFF,Memory keep

7. Timing characteristics of input signals

7-1 AC Timing

Table7-1 VDD=2.7～3.6V,VDDIO=1.65～3.6V,Ta=25℃

Item		Symbol	Condition	Min.	Typ.	Max.	Unit	Note
RS CSB	RS,CSB setup time	tAS		50	—	—	ns	
	RS,CSB hold time	tAH		10	—	—	ns	
WR	write cycle	tCYCW		250	—	—	ns	
	write cycle (High-speed writing mode)	tCYCW	16bit bus,2bit/pixel	250	—	—	ns	
			8bit bus,2bit/pixel 16bit bus,2bit/pixel	125	—	—	ns	
			8bit bus,4bit/pixel	62.5	—	—	ns	
	Control pulse "L" Width	tCPLW		40	—	—	ns	
	Control pulse "H" Width	tCPHW		40	—	—	ns	
RD	Read cycle	tCYCR		250	—	—	ns	
	Control pulse "L" Width	tCPLR		40	—	—	ns	
	Control pulse "H" Width	tCPHR		125	—	—	ns	
D[15:00]	Data setup time	tDS		30	—	—	ns	
	Data hold time	tDH		10	—	—	ns	
	Read access time	tACC	C_L=30pF (max.)	—	—	60	ns	
	Read access time	tOD		10	—	—	ns	

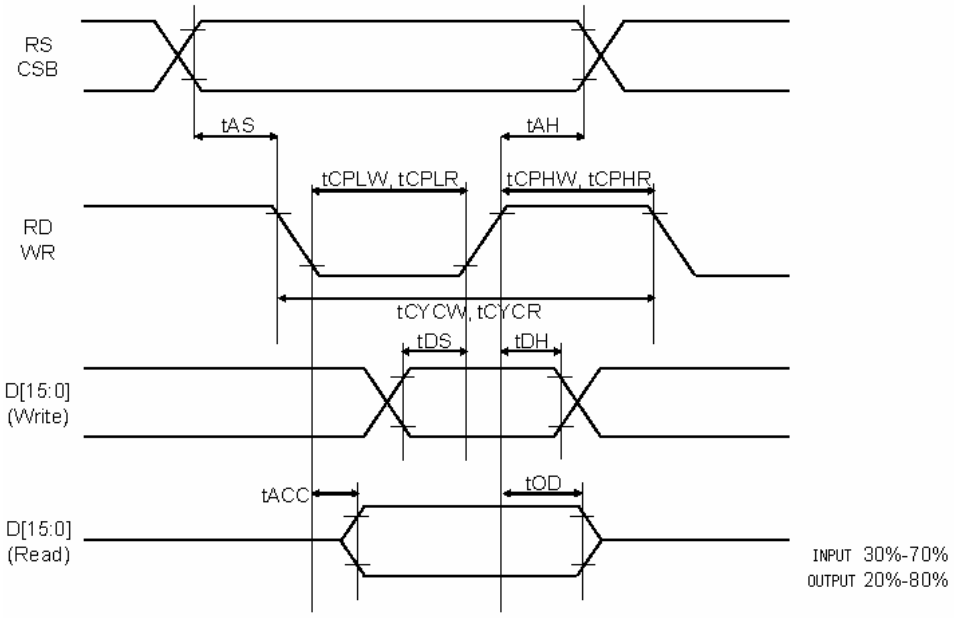

7-2 Reset Input Timing

Table 7-2

Parameter	Symbol	Min.	Typ.	Max.	Unit	Remark
Reset low-level width	t_{RST}	1.5	-	-	us	
Reset cansel time	T_{RST_C}	-	-	0.3	us	

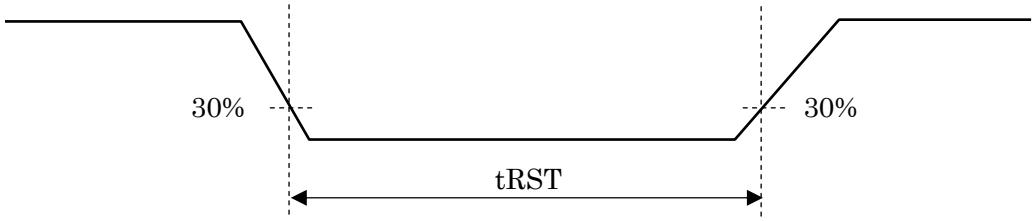

8. Power Sequence

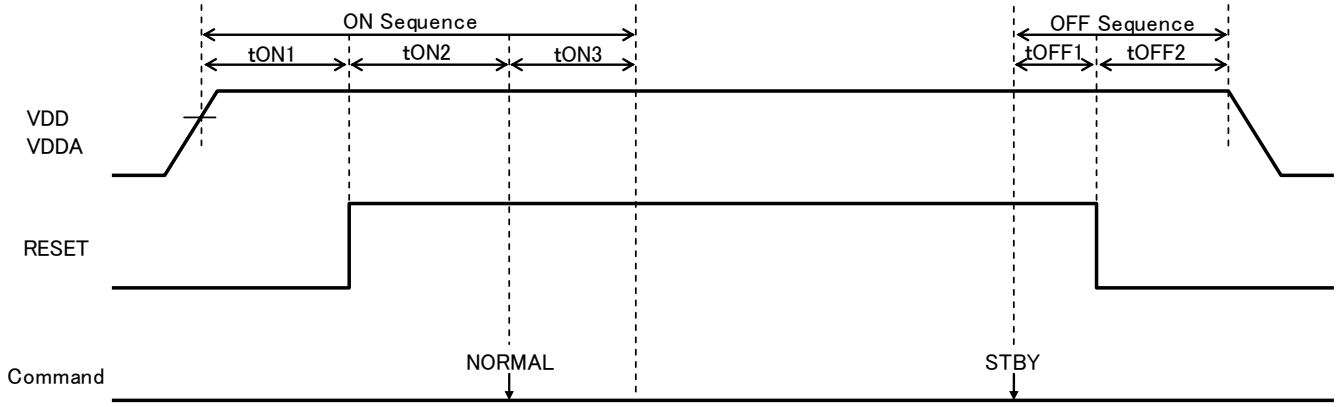

Table 8-1

Symbol	Min.	Typ.	Max.	Unit
tON1	100	—	—	μs
tON2	—	5	—	ms
tON3	—	24+1V	—	ms
tOFF1	—	32+1V	—	ms
tOFF2	0	—	—	ms

9. Optical Characteristics

9-1 Driving the Back Light Condition

Table 9-1 Ta=+25° C

Parameter		Symbol	Condition	Min.	Typ.	Max.	Unit	Remark
Viewing Angle Range		θ21, θ22	CR>2		55		degree	[Note1,2]
		θ11, θ12			55		degree	
Contrast Ratio		CR	θ=0°		15		–	[Note2,4,5]
Response Time	Rise	τr	θ=0°		10		ms	[Note3,4]
	Decay	τd			20		ms	
White Chromaticity		x	θ=0°		0.31		–	[Note4,5]
		y			0.33		–	
Reflection ratio		R	θ=0°		16		%	[Note6]

*The measuring method of the optical characteristics is shown by the following figure.

* A measurement device is Minolta luminance meter CM2002. (With the diffusion reflection unit.)

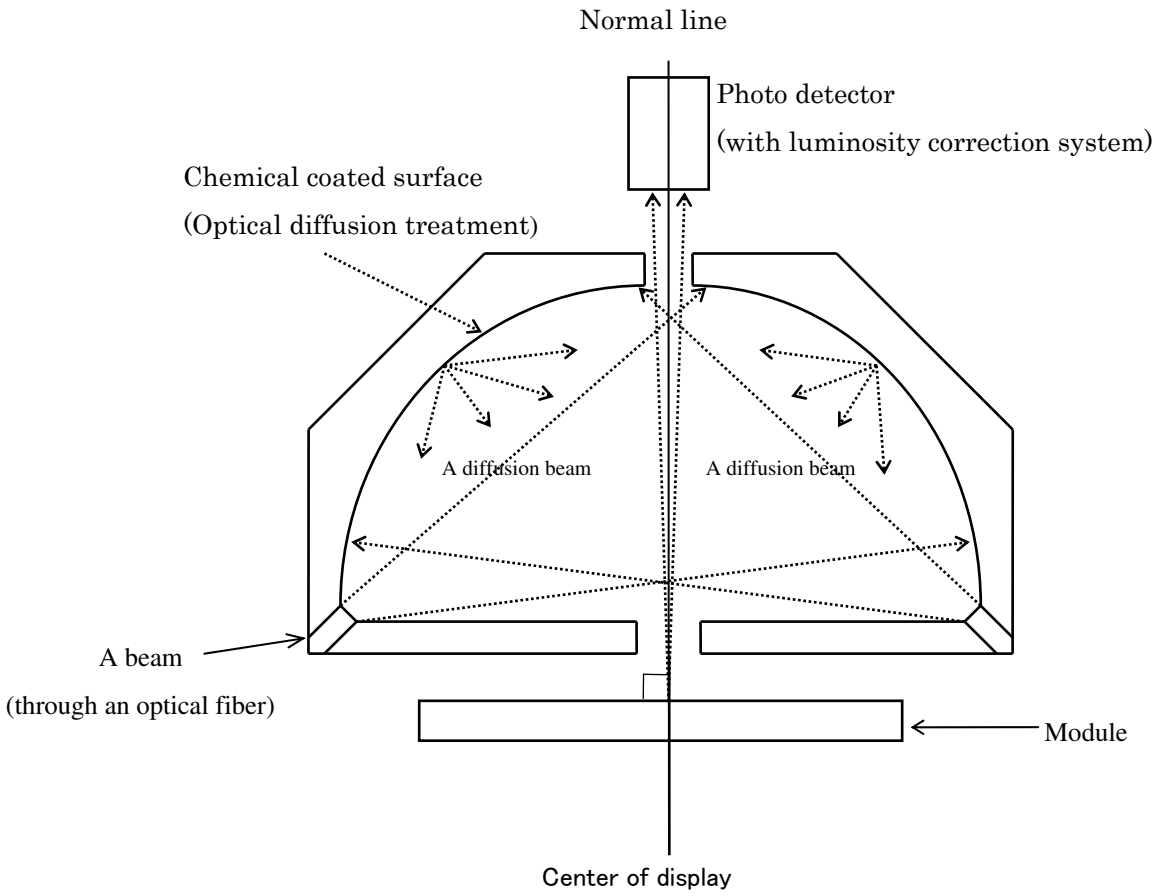

Optical characteristics measuring method (b)

[Note 1] Definitions of viewing angle range

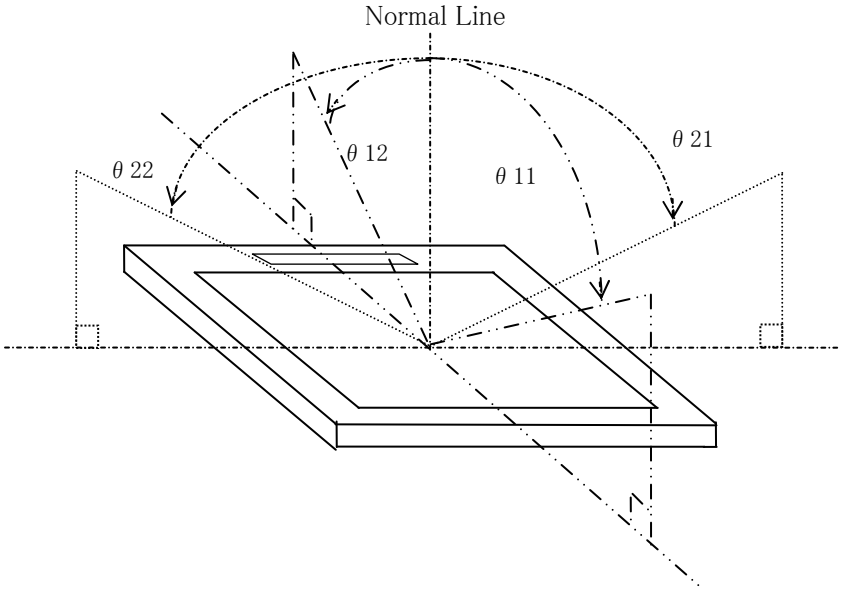

[Note 2] Definition of contrast ratio

The contrast ratio is defined as the following:

$$\text{Contrast ratio (CR)} = \frac{\text{Luminance (brightness) with all pixels white}}{\text{Luminance (brightness) with all pixels black}}$$

[Note 3] Definition of response time

The response time is defined as the following figure and shall be measured by switching the input signal for "black" and "white"

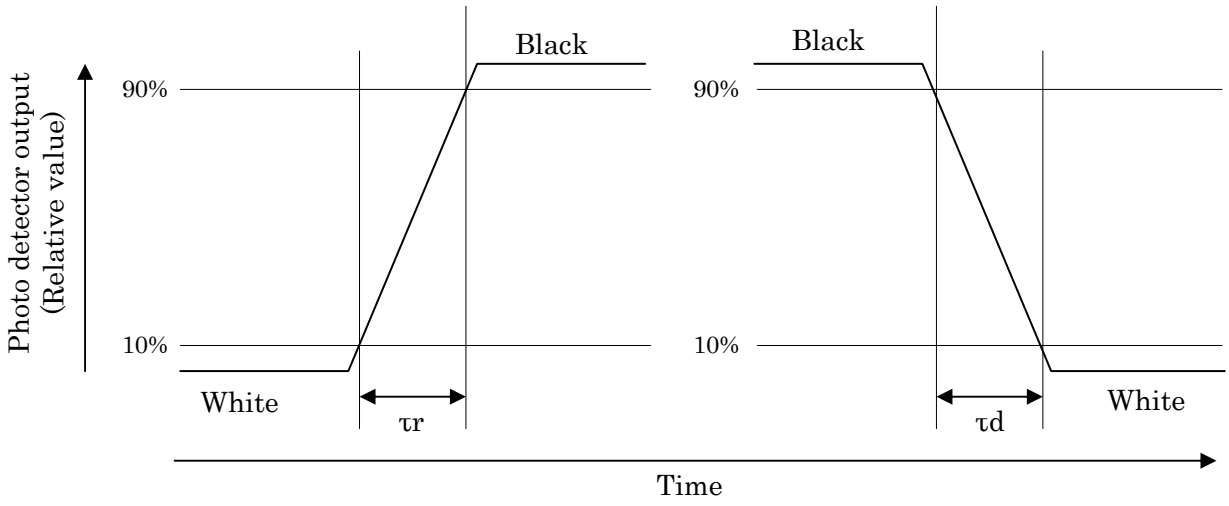

[Note 4] This shall be measured at center of the screen.

[Note 5] A measurement device is Minolta CM-2002.

[Note 6] Definition of reflection ratio

The contrast ratio is defined as the following:

$$\text{Contrast ratio (R)} = \frac{\text{Light detected level of the reflection by the LCD module}}{\text{Light detected level of the reflection by the standard white board}}$$

10. Explanation of Function

10.1. Basic Operation

This IC stores image data input from HOST in internal RAM and outputs the image from source terminal S [160:1] accordingly to source output configuration. We will call the operation of HOST inputting image data to this IC (writing into internal RAM) "RAM Write", and host reading image data from internal RAM "RAM Read", and outputting image data from this IC to the panel "Panel Transfer". Timing of each of these operations is accordingly to command from the HOST (Detail is in latter page.). Primarily, image data input only is transferred to the panel. Aside from image data transmitting, registers can be set up to control each function. By reading the register, condition of inside the IC can be checked.

Data bus width can be set either 16bit or 8bit by setting up BUSSEL terminal.

16bitbus transmits image data with terminal D [15:0] to and from HOST. For command receiving from HOST and register access, use terminal D [7:0].

8bitbus uses terminal D [7:0] for image data transmitting, receiving command from HOST and register access.

RAM Write

There are two kinds of RAM Write:

RAM Write	Operation	Command
All screen RAM Write	Inputs data of once screen panel size set in register (PSIZEX and PSIZEY)	LDIMG
Partial RAM Write	Inputs image data equal partial area set up in register (PTLAREA).	LDIMGPTL

RAM Read

There are two kinds of RAM Read:

RAM Read	Operation	Command
All screen RAM Read	Reads data of once screen panel size set in register (PSIZEX and PSIZEY)	RDIMG
Partial RAM Read	Reads image data equal partial area set up in register (PTLAREA).	RDIMGPTL

Panel Transfer

There are two kinds of Panel Transfer:

Panel Transfer	Operation	Command
All screen Panel Transfer	Transfers data of once screen panel size set in register (PSIZEX and PSIZEY) to the panel	DISP
Partial Panel Transfer	Transfers image data equal partial area set up in register (PTLAREA) to the panel	DISPPTL

10.2. Command Transfer

Data control from HOST uses two way data bus (D[15:0]. The control signals are CSB, WR, RD and RS.

Control Signal	Function
CSB	Chip Select When L, this input interface is active When H, inactive
WR	Write enable Reads data D by WR rise
RD	Read enable Reads data D by RD fall. At the time of write operation, it should be fixed at H.
RS	Recognition of input data D When WR rises and RS=L, recognizes D{7:0} as command. When WR rises and RS=H, recognizes D[15:0] as data.

10.2.1. Write Operation

An example of write cycle (WR goes from H→L→H) is shown below.

Make sure to input command first. After that, write data as necessary. Until new command is input, it will continue operation accordingly to the original command.

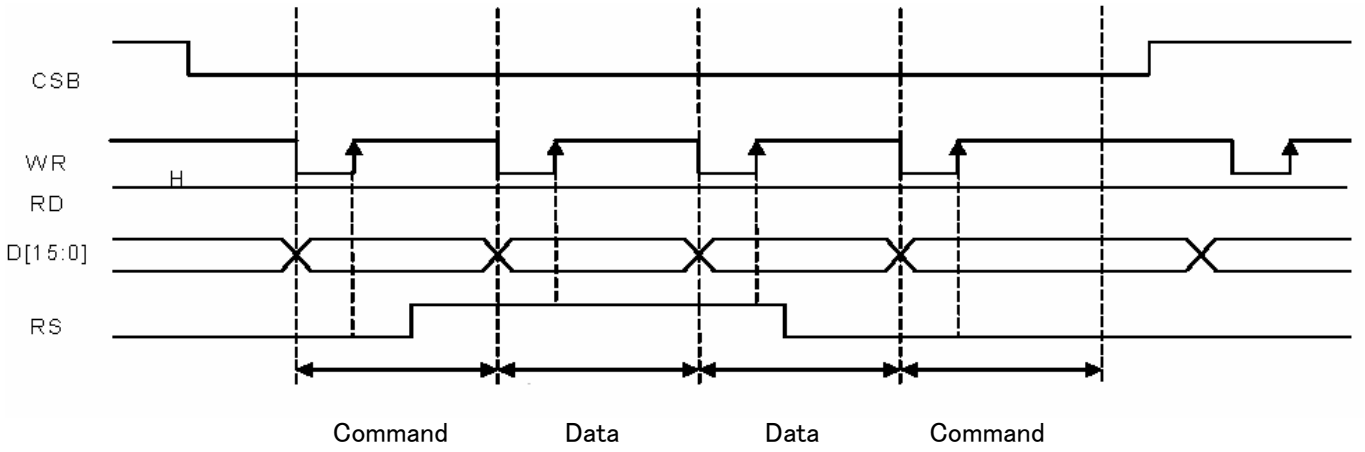

Command setting only:	Command			
Setting command and parameter:	Command	＋ Parameter1	…	ParameterN
Setting command and image data:	Command	＋ Image data	…	Image data

The Period of “Transfer Command (DISP, DISPPTL) writing” to “500ns”, please do not write as followings

10.2.2. Read Oepration

An example of read cycle (RD goes H→L→H) is shown below.

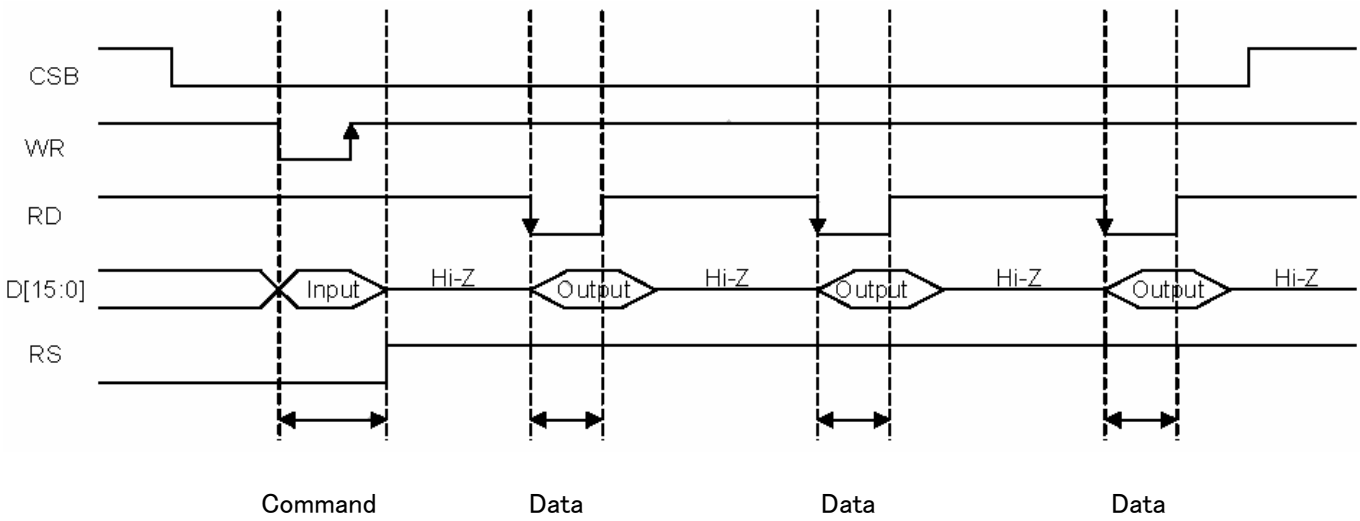

Command setting:	Command （Output is Dummy Data）			
Setting command and parameter:	Command , Parameter1	…	ParameterN	
Setting command and image data:	Command , Dummy Data , Image data	…	Image data	

10.3. Data Protocol

Data protocol for transmission of data (image, command, register) with HOST is supported as shown below.
Data protocol is decided by register PRTCLSEL. Along with protocol, terminal BUSSEL also needs to be set up.
Terminal BUSSEL designates data bus width on hardware. Width is 8bit when L and 16 bit when H.
Same protocol is applied regardless of data transmission.

Table 10-1

BUSSEL	Data bus	Register PRTCLSEL[2:0]	Bit/Pixel	note	
L	8	000	1bit	D[15:8] is fixed at "L"	①
		001	2bit		②
		010	4bit		③
H	16	000	1bit	When RAM write, D[15:8] inputs "L" When RAM read, D[15:8] outputs "L"	④
		001	2bit		⑤
		010	4bit		⑥
		101	2bit		⑦
		110	4bit		⑧

Virtual location on RAM (with panel upper left as original point)

Pixel(1,1)[P1]				Pixel(2,1)[P2]				Pixel(3,1)[P3]				Pixel(4,1)[P4]				…
Data [3]	Data [2]	Data [1]	Data [0]	Data [3]	Data [2]	Data [1]	Data [0]	Data [3]	Data [2]	Data [1]	Data [0]	Data [3]	Data [2]	Data [1]	Data [0]	…
…																
…																

8bit bus(BUSSEL:"L")

①1bit/pixel(PRTCLSEL:000)

	1st	2nd	3rd	…
D7	P0 Data [3]	P8 Data [3]	P16 Data [3]	…
D6	P1 Data [3]	P9 Data [3]	P17 Data [3]	…
D5	P2 Data [3]	P10 Data [3]	P18 Data [3]	…
D4	P3 Data [3]	P11 Data [3]	P19 Data [3]	…
D3	P4 Data [3]	P12 Data [3]	P20 Data [3]	…
D2	P5 Data [3]	P13 Data [3]	P21 Data [3]	…
D1	P6 Data [3]	P14 Data [3]	P22 Data [3]	…
D0	P7 Data [3]	P15 Data [3]	P23 Data [3]	…

②2bit/pixel(PRTCLSEL:001)

	1st	2nd	3rd	…
D7	P0 Data [3]	P4 Data [3]	P8 Data [3]	…
D6	P0 Data [2]	P4 Data [2]	P8 Data [2]	…
D5	P1 Data [3]	P5 Data [3]	P9 Data [3]	…
D4	P1 Data [2]	P5 Data [2]	P9 Data [2]	…
D3	P2 Data [3]	P6 Data [3]	P10 Data [3]	…
D2	P2 Data [2]	P6 Data [2]	P10 Data [2]	…
D1	P3 Data [3]	P7 Data [3]	P11 Data [3]	…
D0	P3 Data [2]	P7 Data [2]	P11 Data [2]	…

③4bit/pixel(PRTCLSEL:010)

	1st	2nd	3rd	…
D7	P0 Data [3]	P2 Data [3]	P4 Data [3]	…
D6	P0 Data [2]	P2 Data [2]	P4 Data [2]	…
D5	P0 Data [1]	P2 Data [1]	P4 Data [1]	…
D4	P0 Data [0]	P2 Data [0]	P4 Data [0]	…
D3	P1 Data [3]	P3 Data [3]	P5 Data [3]	…
D2	P1 Data [2]	P3 Data [2]	P5 Data [2]	…
D1	P1 Data [1]	P3 Data [1]	P5 Data [1]	…
D0	P1 Data [0]	P3 Data [0]	P5 Data [0]	…

16bit bus (BUSSEL:"H")

④1bit/pixel(PRTCLSEL:000)

	1st	2nd	3rd	…
D15	L	L	L	…
D14	L	L	L	…
D13	L	L	L	…
D12	L	L	L	…
D11	L	L	L	…
D10	L	L	L	…
D9	L	L	L	…
D8	L	L	L	…
D7	P0 Data [3]	P8 Data [3]	P16 Data [3]	…
D6	P1 Data [3]	P9 Data [3]	P17 Data [3]	…
D5	P2 Data [3]	P10 Data [3]	P18 Data [3]	…
D4	P3 Data [3]	P11 Data [3]	P19 Data [3]	…
D3	P4 Data [3]	P12 Data [3]	P20 Data [3]	…
D2	P5 Data [3]	P13 Data [3]	P21 Data [3]	…
D1	P6 Data [3]	P14 Data [3]	P22 Data [3]	…
D0	P7 Data [3]	P15 Data [3]	P23 Data [3]	…

⑤2bit/pixel(PRTCLSEL:001)

	1st	2nd	3rd	…
D15	L	L	L	…
D14	L	L	L	…
D13	L	L	L	…
D12	L	L	L	…
D11	L	L	L	…
D10	L	L	L	…
D9	L	L	L	…
D8	L	L	L	…
D7	P0 Data [3]	P4 Data [3]	P8 Data [3]	…
D6	P0 Data [2]	P4 Data [2]	P8 Data [2]	…
D5	P1 Data [3]	P5 Data [3]	P9 Data [3]	…
D4	P1 Data [2]	P5 Data [2]	P9 Data [2]	…
D3	P2 Data [3]	P6 Data [3]	P10 Data [3]	…
D2	P2 Data [2]	P6 Data [2]	P10 Data [2]	…
D1	P3 Data [3]	P7 Data [3]	P11 Data [3]	…
D0	P3 Data [2]	P7 Data [2]	P11 Data [2]	…

⑥4bit/pixel(PRTCLSEL:010)

	1st	2nd	3rd	…
D15	L	L	L	…
D14	L	L	L	…
D13	L	L	L	…
D12	L	L	L	…
D11	L	L	L	…
D10	L	L	L	…
D9	L	L	L	…
D8	L	L	L	…
D7	P0 Data [3]	P2 Data [3]	P4 Data [3]	…
D6	P0 Data [2]	P2 Data [2]	P4 Data [2]	…
D5	P0 Data [1]	P2 Data [1]	P4 Data [1]	…
D4	P0 Data [0]	P2 Data [0]	P4 Data [0]	…
D3	P1 Data [3]	P3 Data [3]	P5 Data [3]	…
D2	P1 Data [2]	P3 Data [2]	P5 Data [2]	…
D1	P1 Data [1]	P3 Data [1]	P5 Data [1]	…
D0	P1 Data [0]	P3 Data [0]	P5 Data [0]	…

16bit bus(BUSSEL:"H")

⑦2bit/pixel(PRTCLSEL:101)

	1st	2nd	3rd	…
D15	P0 Data [3]	P8 Data [3]	P16 Data [3]	…
D14	P0 Data [2]	P8 Data [2]	P16 Data [2]	…
D13	P1 Data [3]	P9 Data [3]	P17 Data [3]	…
D12	P1 Data [2]	P9 Data [2]	P17 Data [2]	…
D11	P2 Data [3]	P10 Data [3]	P18 Data [3]	…
D10	P2 Data [2]	P10 Data [2]	P18 Data [2]	…
D9	P3 Data [3]	P11 Data [3]	P19 Data [3]	…
D8	P3 Data [2]	P11 Data [2]	P19 Data [2]	…
D7	P4 Data [3]	P12 Data [3]	P20 Data [3]	…
D6	P4 Data [2]	P12 Data [2]	P20 Data [2]	…
D5	P5 Data [3]	P13 Data [3]	P21 Data [3]	…
D4	P5 Data [2]	P13 Data [2]	P21 Data [2]	…
D3	P6 Data [3]	P14 Data [3]	P22 Data [3]	…
D2	P6 Data [2]	P14 Data [2]	P22 Data [2]	…
D1	P7 Data [3]	P15 Data [3]	P23 Data [3]	…
D0	P7 Data [2]	P15 Data [2]	P23 Data [2]	…

⑧4bit/pixel(PRTCLSEL:110)

	1st	2nd	3rd	…
D15	P0 Data [3]	P4 Data [3]	P8 Data [3]	…
D14	P0 Data [2]	P4 Data [2]	P8 Data [2]	…
D13	P0 Data [1]	P4 Data [1]	P8 Data [1]	…
D12	P0 Data [0]	P4 Data [0]	P8 Data [0]	…
D11	P1 Data [3]	P5 Data [3]	P9 Data [3]	…
D10	P1 Data [2]	P5 Data [2]	P9 Data [2]	…
D9	P1 Data [1]	P5 Data [1]	P9 Data [1]	…
D8	P1 Data [0]	P5 Data [0]	P9 Data [0]	…
D7	P2 Data [3]	P6 Data [3]	P10 Data [3]	…
D6	P2 Data [2]	P6 Data [2]	P10 Data [2]	…
D5	P2 Data [1]	P6 Data [1]	P10 Data [1]	…
D4	P2 Data [0]	P6 Data [0]	P10 Data [0]	…
D3	P3 Data [3]	P7 Data [3]	P11 Data [3]	…
D2	P3 Data [2]	P7 Data [2]	P11 Data [2]	…
D1	P3 Data [1]	P7 Data [1]	P11 Data [1]	…
D0	P3 Data [0]	P7 Data [0]	P11 Data [0]	…

10.4. ACK Terminal

During panel transfer (ACTIVE) and when CSB is "L", output from ACK terminal is "L".

Panel transfer status	RESETB	CSB	ACK OUTPUT
—	L	—	H
—	H	H	L
ACTIVE	H	L	L
WAIT	H	L	H

When ACK is "L" (ACTIVE), Do not use any command input other than RAM Write.

(It is not a problem in case of RAM Write setting, however, the forwarding command cannot be input.)

11. Command

11-1 Command explanation

NORMAL[02h]
Executes power ON sequence automatically and switches to NORMAL mode.

STBY[04h]
Executes power OFF sequence automatically and switches to STANDBY mode.

RDIMG[16h]
Enables RAM data read.
By reading data following this command, RAM data for entire display is sequentially read.
(Read protocol is the same as write protocol.)

RDIMGPTL[18h]
Enables RAM data read (rectangular wave access).
By reading data following this command, RAM data for area set in PTLAREA is sequentially read.
(Read protocol is the same as write protocol.)

LDIMG[20h]
Enables data write to RAM.
By writing data following this command, data is sequentially written to RAM area for entire display.

LDIMGPTL[22h]
Enables data write (rectangular wave access) to RAM.
By writing data following this command, data is sequentially written to RAM area for area set in PTLAREA.

PTLAREA[27h]
Sets area for rectangular wave access.

XSTARTL [D7-D0]: Starting address for rectangular wave access (X coordinate low 8bit)※
XSTARTH [D1,D0]: Starting address for rectangular wave access (X coordinate high 2bit)※
YSTARTL [D7-D0]: Starting address for rectangular wave access (Y coordinate low 8bit)
YSTARTH [D1,D0] : Starting address for rectangular wave access (Y coordinate high 2bit)
WIDTHL [D7-D0] : Width of rectangular wave access (low 8 bit)※
WIDTHH [D1,D0] : Width of rectangular wave access (high 2 bit)※
HEIGHTL [D7-D0] : Height of rectangular wave access (low 8 bit)
HEIGHTH [D1,D0] : Height of rectangular wave access (high 2 bit)

※ X coordinate and area width of rectangular wave access starting address should be in pixel unit which can be transmitted in one data protocol. However, in high speed write mode, it should be set in multiple of 8 regardless of data protocol.

Eg.) In case of 8bitbus 1bit/pixel, data that can be transmitted in one time is 8 pixel worth of data, therefore, each setting value should be in multiple of 8.
In case of 16bitbus 4bit/pixel, data that can be transmitted in one time is 4 pixel worth of data, therefore, each setting value should be in multiple of 4.

DISPDIR[28h]
Set up the display.

ROTATION[D1,D0]: [00] none [01] 90 degree turn [10] 180 degree turn [11] 270 degree turn

DITHER[2Bh]
Set up On/Off of dithering function.
This dithers data 4bit/pixel read from RAM. 4 gray scale display → dithered 16 gray scale display

DITHER [D0] : [0]OFF [1]ON

PRTCLSEL[2Ch]
Select image data protocol.
9.3. Refer to Data Protocol.

MOVIE[2Dh]
Set up ON/OFF of movie mode.
Continues automatic transfer at about 30Hz without using transfer command.
MOVIE [D0] : [0]OFF [1]ON

FLOAD[2Eh]
Set up ON/OFF of high speed mode (at 8pixel unit).
FLOAD [D0] : [0]OFF [1]ON

DISP[33h]
Transfer RAM data of entire display to the panel.

DISPPTL[35h]
Transfer RAM data of area set up in PTLAREA to the panel.

11-2. Command List

Address (Hex)	Command	R/W/C	Parameter								Default (Hex)
			D7	D6	D5	D4	D3	D2	D1	D0	
02h	NORMAL	C									
04h	STBY	C									
16h	RDIMG	C									
18h	RDIIMGPTL	C									
20h	LDIMG	C									
22h	LDIMGPTL	C									
27h	PTLAREA	R/W	XSTARTL								00h
			L	L	L	L	L	L	XSTARTH		00h
			YSTARTL								00h
			L	L	L	L	L	L	YSTARTH		00h
			WIDTHL								00h
			L	L	L	L	L	L	WIDTHH		00h
			HEIGHTL								00h
			L	L	L	L	L	HEIGHTH			00h
28h	DISPDIR	R/W	L	L	L	L	L	L	ROTATION		00h
2Bh	DITHER	R/W	L	L	L	L	L	L	L	DITHER	00h
2Ch	PRTCLSEL	R/W	L	L	L	L	L	PRTCLSEL			01h
2Dh	MOVIE	R/W	L	L	L	L	L	L	L	MOVIE	00h
2Eh	FLOAD	R/W	L	L	L	L	L	L	L	FLOAD	00h
33h	DISP	C									
35h	DISPPTL	C									

R=Read, W=Write, C=Command D15～D8=Low

12. Handling of modules

12-1. Connecting the FPC by the ACF

1) Be sure to turn off the power supply and the signals when connecting the FPC

2) Please connect for too much stress not to join FPC in the case of connection of FPC.

12-2. About handling of FPC

1) Do not dangle the LCD module by holding the FPC, or do not give any stress to it.

11-3. Mounting of the module

1) The module should be held on to the plain surface. Do not give any warping or twisting stress to the module.

11-4. Cautions in assembly / Handling pre cautions

As the polarizer can be easily scratched, be most careful in handling it.

1) Work environments in assembly.

Working under the following environments is desirable:

a) Implement more than 1MΩ conductive treatment (by placing a conductive mat or applying conductive paint) on the floor or tiles.

b) No dusts come in to the working room. Place an adhesive, anti-dust mat at the entrance of the room.

c) Humidity of 50 to 70% and temperature of 15 to 27° C are desirable.

d) All workers wear conductive shoes, conductive clothes, conductive fingerstalls and grounding belts without fail.

e) Use a blower for electrostatic removal. Set it in a direction slightly tilt downward so that each Module can be well subjected to its wind. Set the blower at an optimum distance between the blower and the module.

2) How the remove dust on the polarizer

a) Blow out dust by the use of an N² blower with antistatic measures taken. Use of an ionized air gun is recommendable.

b) When the panel surface is soiled, wipe it with soft cloth.

3) If water dropped, etc. remains stuck on the polarizer for a long time, it is apt to get discolored or cause stains. Wipe it immediately.

4) As a glass substrate is used for the TFT-LCD panel, if it is dropped on the floor or hit by something hard, it may be broken or chipped off.

5) Since CMOS LSI is used in this module, take care of static electricity and take the human earth into consideration when handling.

12-5. Others

1) If stored at temperatures below the rated values, the inner liquid crystal may freeze, causing cell destruction. At temperatures exceeding the rated values for storage, the liquid crystal may become isotropic liquid, making it no longer possible to come back to its original state in some cases.

2) If the LCD is broken, do not drink liquid crystal in the mouth. If the liquid crystal adheres to a hand or foot or to clothes, immediately cleanse it with soap.

3) If a water drop or dust adheres to the polarizer, it is apt to cause deterioration. Wipe it immediately.

4) Be sure to observe other caution items for ordinary electronic parts and components.

5) Epoxy resin (amine series curing agent), silicone adhesive material (dealcoholization series and oxime series), tray forming agent (azo compound) etc, in the cabinet or the packing materials may induce abnormal display with polarizer film deterioration regardless of contact or noncontact to polarizer film.

Be sure to confirm the component of them.

13. Outline Dimensions

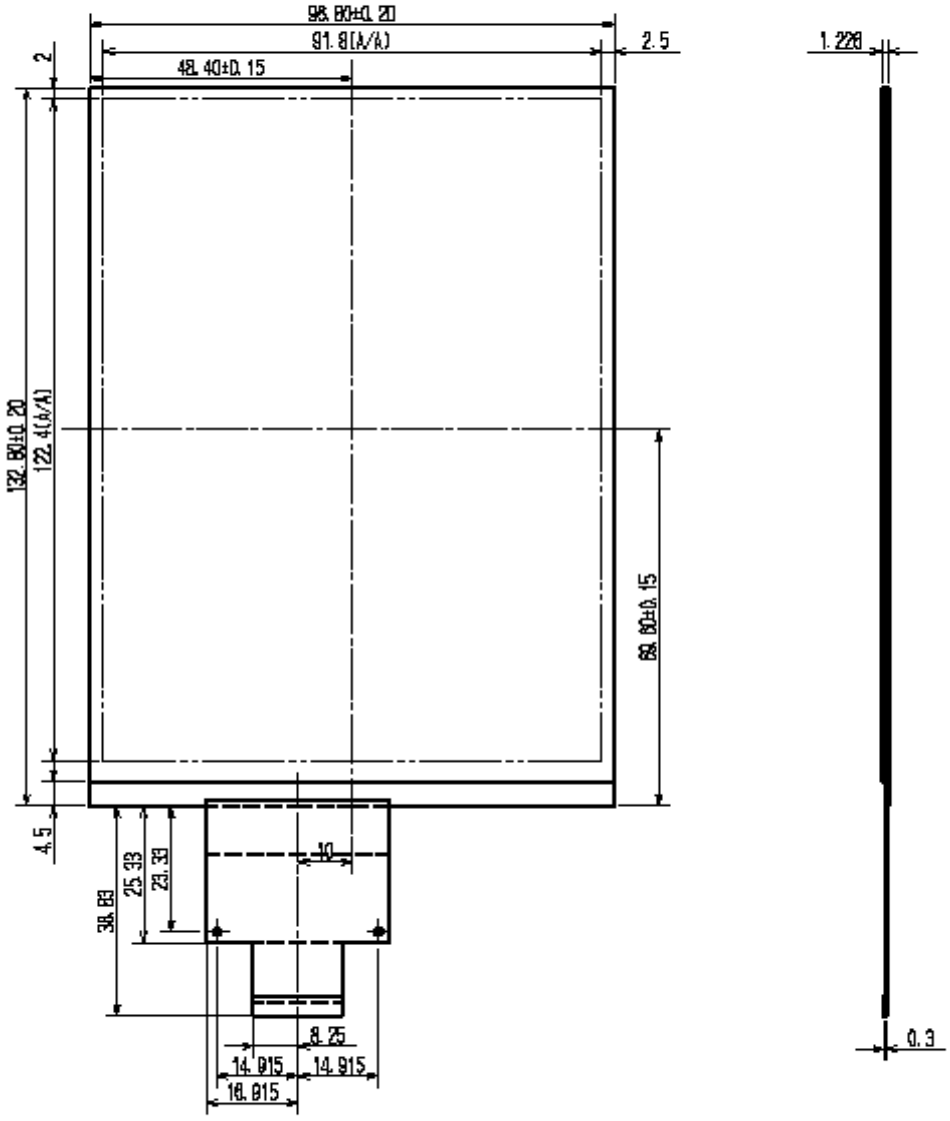

Technical Document

LCD Specification

LCD Group

SHARP

NORTH AMERICA
Sharp Microelectronics of the Americas
5700 NW Pacific Rim Blvd.
Camas, WA 98607, U.S.A.
Phone: (1) 360-834-8700
Fax: (1) 360-834-8903
www.sharpsma.com

TAIWAN
Sharp Electronic Components
(Taiwan) Corporation
8F-A, No. 16, Sec. 4, Nanking E. Rd.
Taipei, Taiwan, Republic of China
Phone: (886) 2-2577-7341
Fax: (886) 2-2577-7326/2-2577-7328

CHINA
Sharp Microelectronics of China
(Shanghai) Co., Ltd.
28 Xin Jin Qiao Road King Tower 16F
Pudong Shanghai, 201206 P.R. China
Phone: (86) 21-5854-7710/21-5834-6056
Fax: (86) 21-5854-4340/21-5834-6057
Head Office:
No. 360, Bashen Road,
Xin Development Bldg. 22
Waigaoqiao Free Trade Zone Shanghai
200131 P.R. China
Email: smc@china.global.sharp.co.jp

EUROPE
Sharp Microelectronics Europe
Division of Sharp Electronics (Europe) GmbH
Sonninstrasse 3
20097 Hamburg, Germany
Phone: 49 (0)180 507 35 07
Fax: (49) 40-2376-2232
www.sharpsme.com

SINGAPORE
Sharp Electronics (Singapore) PTE., Ltd.
438A, Alexandra Road, #05-01/02
Alexandra Technopark,
Singapore 119967
Phone: (65) 271-3566
Fax: (65) 271-3855

KOREA
Sharp Electronic Components
(Korea) Corporation
RM 501 Geosung B/D, 541
Dohwa-dong, Mapo-ku
Seoul 121-701, Korea
Phone: (82) 2-711-5813 ~ 8
Fax: (82) 2-711-5819

JAPAN
Sharp Corporation
Electronic Components & Devices
22-22 Nagaike-cho, Abeno-Ku
Osaka 545-8522, Japan
Phone: (81) 6-6621-1221
Fax: (81) 6117-725300/6117-725301
www.sharp-world.com

HONG KONG
Sharp-Roxy (Hong Kong) Ltd.
Level 26, Tower 1, Kowloon Commerce Centre,
No. 51, Kwai Cheong Road, Kwai Chung,
New Territories, Hong Kong
Phone: (852) 28229311
Fax: (852) 28660779
www.sharp.com.hk
Shenzhen Representative Office:
Room 602-603, 6/F.,
International Chamber of Commerce Tower,
168 Fuhua Rd. 3, CBD,
Futian District, Shenzhen 518048,
Guangdong, P.R. China
Phone: (86) 755-88313505
Fax: (86) 755-88313515