MODEL NO. : TM024HDH29

ISSUED DATE: 2010-3-29

VERSION : Ver 1.0

□Preliminary Specification
■Final Product Specification

TIANMA CONFIDENTIAL

Customer :_____

Approved by	Notes

SHANGHAI TIANMA Confirmed :

Prepared by	Checked by	Approved by

This technical specification is subjected to change without notice

The information contained herein is the exclusive property of SHANGHAI TIANMA MICRO-ELECTRONICS Corporation, and shall not be distributed, reproduced, or disclosed in whole or in part without prior written permission of SHANGHAI TIANMA MICRO-ELECTRONICS Corporation.

Table of Contents

TIANMA CONFIDENTIAL

The information contained herein is the exclusive property of SHANGHAI TIANMA MICRO-ELECTRONICS Corporation, and shall not be distributed, reproduced, or disclosed in whole or in part without prior written permission of SHANGHAI TIANMA MICRO-ELECTRONICS Corporation.

Record of Revision

Rev	Issued Date	Description	Editor
1.0	2010-3-29	Preliminary Specification Release	Jianchuan_wang

TIANMA CONFIDENTIAL

The information contained herein is the exclusive property of SHANGHAI TIANMA MICRO-ELECTRONICS Corporation, and shall not be distributed, reproduced, or disclosed in whole or in part without prior written permission of SHANGHAI TIANMA MICRO-ELECTRONICS Corporation.

1 General Specifications

Feature		Spec
Display Spec	Size	2.4 inch
	Resolution	240(RGB) x 320
	Interface	CPU 8/16 bits
	Color Depth	262k
	Technology Type	a-Si
	Pixel Pitch (mm)	0.153x 0.153
	Pixel Configuration	R.G.B Vertical Stripe
	Display Mode	TM with Normally White
	Surface Treatment(Up Polarizer)	Clear Type (3H)
	Viewing Direction	6 o'clock
	Gray Scale Inversion Direction	12 o'clock
Mechanical Characteristics	LCM (W x H x D) (mm)	42.72x60.26x3.40
	Active Area(mm)	36.72 x 48.96
	With /Without TSP	Without TSP
	Weight (g)	TBD
	LED Numbers	4 LEDs
Electronic	Driver IC	IL9340

Note 1:Viewing direction for best image quality is different from TFT definition, there is a 180 degree shift.

Note 2 : Requirements on Environmental Protection: Q/S0002

Note 3: LCM weight tolerance: ± 5%

TIANMA CONFIDENTIAL

The information contained herein is the exclusive property of SHANGHAI TIANMA MICRO-ELECTRONICS Corporation, and shall not be distributed, reproduced, or disclosed in whole or in part without prior written permission of SHANGHAI TIANMA MICRO-ELECTRONICS Corporation.

2 Input/Output Terminals

2.1 TFT LCD Panel

No	Symbol	I/O	Description	Comment
1	NC1	-	NC	
2	NC2	-	NC	
3	NC3	-	NC	
4	IM3	I	Mode select	NOTE
5	NC4	-	NC	
6	RESET	I	Reset signal	
7	VSYNC	I	Frame synchronizing signal for RGB interface operation	
8	HSYNC	I	Line synchronizing signal for RGB interface operation	
9	DOTCLK	I	Dot clock signal for RGB interface operation	
10	DEN	I	Data enable signal for RGB interface operation	
11	DB17	I	Data Input	
12	DB16	I	Data Input	
13	DB15	I	Data Input	
14	DB14	I	Data Input	
15	DB13	I	Data Input	
16	DB12	I	Data Input	
17	DB11	I	Data Input	
18	DB10	I	Data Input	
19	DB9	I	Data Input	
20	DB8	I	Data Input	
21	DB7	I	Data Input	
22	DB6	I	Data Input	
23	DB5	I	Data input	
24	DB4	I	Data input	
25	DB3	I	Data input	
26	DB2	I	Data input	
27	DB1	I	Data input	
28	DB0	I	Data input	

TIANMA CONFIDENTIAL

The information contained herein is the exclusive property of SHANGHAI TIANMA MICRO-ELECTRONICS Corporation, and shall not be distributed, reproduced, or disclosed in whole or in part without prior written permission of SHANGHAI TIANMA MICRO-ELECTRONICS Corporation.

29	RD	I	Read enables signal	
30	WR	I	Write enables signal	
31	RS	I	Register select signal	
32	CS	I	Chip select signal	
33	VSS	P	Power Ground	
34	VCC	P	Power Supply	
35	LED-	P	LED light cathode	
36	LED+	P	LED light anode	

Note1: I/O definition：I-----Input O---Output P----Power/ Ground NC--- Not Connected

Note2:

IM3	Interface	Data Bus Use	
		Register/Content	GRAM
0	8080 MCU 16_Bit Parallel	D8~D1	D17~D10,D8~D1
1	8080 MCU 8_Bit Parallel	D17~D10	D17~D10

TIANMA CONFIDENTIAL

The information contained herein is the exclusive property of SHANGHAI TIANMA MICRO-ELECTRONICS Corporation, and shall not be distributed, reproduced, or disclosed in whole or in part without prior written permission of SHANGHAI TIANMA MICRO-ELECTRONICS Corporation.

3 Absolute Maximum Ratings

3.1 Driving TFT LCD Panel

GND=0V, Ta=25℃

Item	Symbol	MIN	MAX	Unit	Remark
Logic Supply Voltage	IOVCC	-0.3	4.6	V	
Analog Supply Voltage	VCC	-0.3	4.6	V	
Input voltage	DB0-DB17,RD,RS,CS,WR	-0.3	IOVCC+0.5	V	
Back Light Forward Current	I_{LED}	-	25	mA	For each LED
Operating Temperature	T_{OPR}	-20	70	℃	
Storage Temperature	T_{STG}	-30	80	℃	

TIANMA CONFIDENTIAL

The information contained herein is the exclusive property of SHANGHAI TIANMA MICRO-ELECTRONICS Corporation, and shall not be distributed, reproduced, or disclosed in whole or in part without prior written permission of SHANGHAI TIANMA MICRO-ELECTRONICS Corporation.

4 Electrical Characteristics

4.1 Driving TFT LCD Panel

GND=0V, Ta=25℃

Item		Symbol	MIN	TYP	MAX	Unit	Remark
Logic Supply Voltage		IOVCC	1.65	1.8/2.8	3.3	V	
Analog Supply Voltage		VCC	2.3	2.8	3.3	V	
Input Signal Voltage	Low Level	V_{IL}	0.8x IOVCC	-	IOVCC	V	DB0-DB17,IM0,IM3,RD, RS,CS,WR,RESET
	High Level	V_{IH}	-	-	0.2xIOVCC	V	
Output Signal Voltage	Low Level	V_{OL}	0.8xIOVCC	-	-	V	
	High Level	V_{OH}	-	--	0.2xIOVCC	V	
(Panel+ LSI) Power Consumption		Black Mode (60Hz)	-	TBD	-	mW	
		8 Color Mode	-	TBD	-	mW	
		Sleeping Mode	-	TBD	-	mW	

4.2 Driving Backlight Ta=25℃

Item	Symbol	Min	Typ	Max	Unit	Remark
Forward Current	I_F	-	15	-	mA	For each LED
Forward Voltage	V_F	2.9	3.2	3.4	V	For each LED
Power Consumption	W_{BL}	-	192	-	mW	3 LEDs

Note1: Figure below shows the connection of backlight LED.

Note 2: One LED: I_F =15 mA, V_F =3.2V

Note 3: The life of LED: 20,000 hours

TIANMA CONFIDENTIAL

The information contained herein is the exclusive property of SHANGHAI TIANMA MICRO-ELECTRONICS Corporation, and shall not be distributed, reproduced, or disclosed in whole or in part without prior written permission of SHANGHAI TIANMA MICRO-ELECTRONICS Corporation.

4.3 Block Diagram

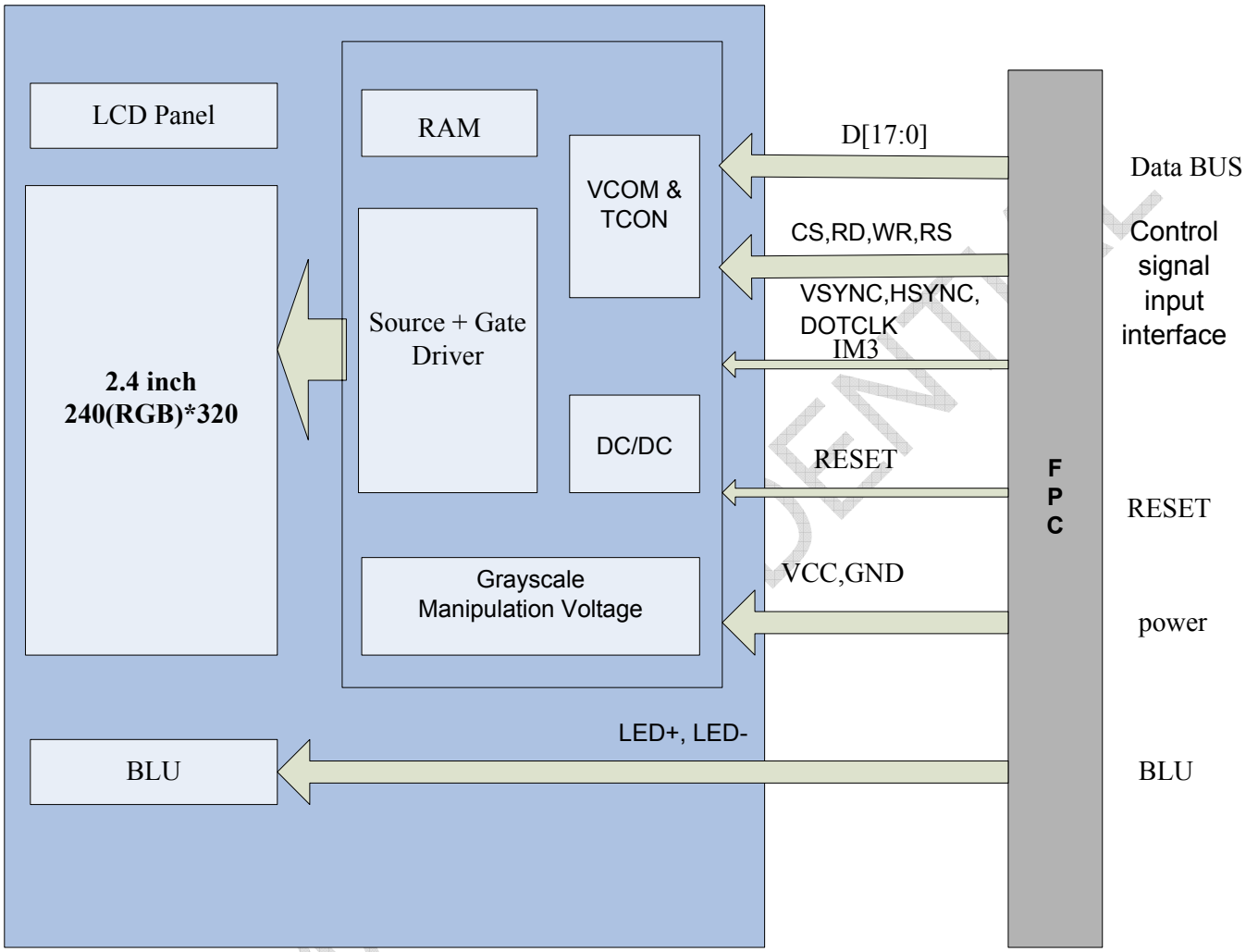

The information contained herein is the exclusive property of SHANGHAI TIANMA MICRO-ELECTRONICS Corporation, and shall not be distributed, reproduced, or disclosed in whole or in part without prior written permission of SHANGHAI TIANMA MICRO-ELECTRONICS Corporation.

5 Timing Chart

5.1 Interface Characteristics

Signal	Symbol	Parameter	min	max	Unit	Description
DCX	tast	Address setup time	0	-	ns	
	taht	Address hold time (Write/Read)	10	-	ns	
CSX	tchw	CSX "H" pulse width	0	-	ns	
	tcs	Chip Select setup time (Write)	15	-	ns	
	trcs	Chip Select setup time (Read ID)	45	-	ns	
	trcsfm	Chip Select setup time (Read FM)	355	-	ns	
	tcsf	Chip Select Wait time (Write/Read)	10	-	ns	
WRX	twc	Write cycle	66	-	ns	
	twrh	Write Control pulse H duration	15	-	ns	
	twrl	Write Control pulse L duration	15	-	ns	
RDX (FM)	trcfm	Read Cycle (FM)	450	-	ns	
	trdhfm	Read Control H duration (FM)	90	-	ns	
	trdlfm	Read Control L duration (FM)	355	-	ns	
RDX (ID)	trc	Read cycle (ID)	160	-	ns	
	trdh	Read Control pulse H duration	90	-	ns	
	trdl	Read Control pulse L duration	45	-	ns	
D[17:0], D[15:0], D[8:0], D[7:0]	tdst	Write data setup time	10	-	ns	For maximum CL=30pF For minimum CL=8pF
	tdht	Write data hold time	10	-	ns	
	trat	Read access time	-	40	ns	
	tratfm	Read access time	-	340	ns	
	trod	Read output disable time	20	80	ns	

Parallel interface characteristics

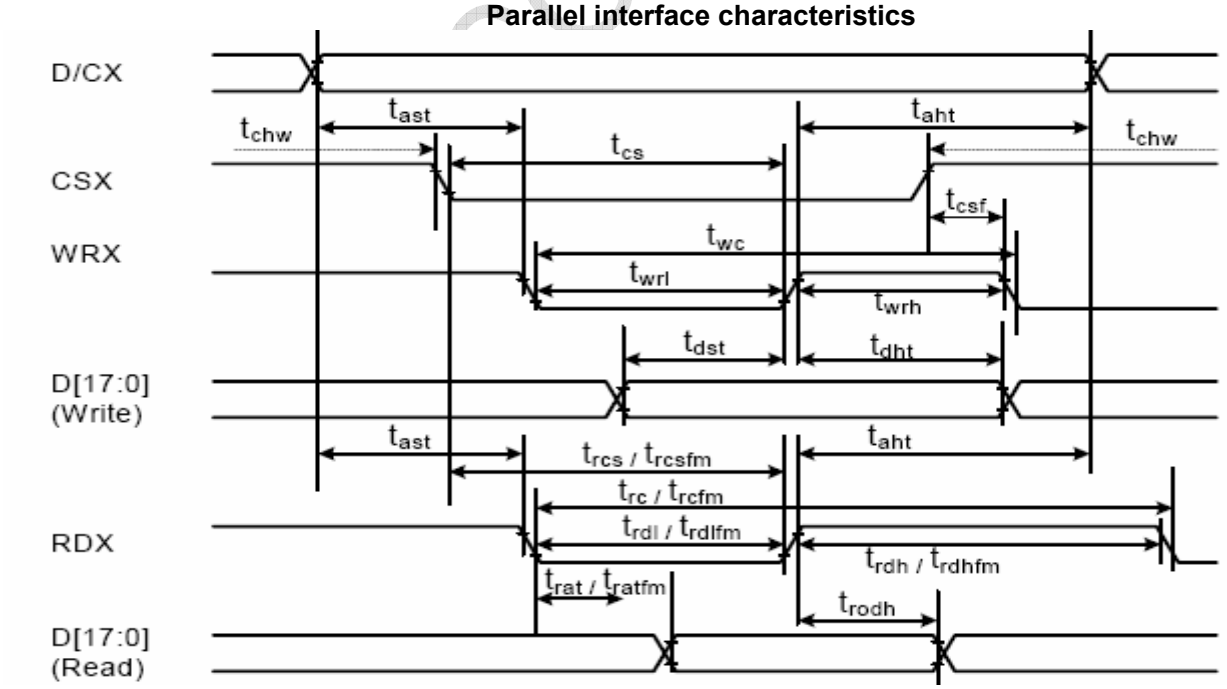

Figure 5.1 Parallel interface characteristics

The information contained herein is the exclusive property of SHANGHAI TIANMA MICRO-ELECTRONICS Corporation, and shall not be distributed, reproduced, or disclosed in whole or in part without prior written permission of SHANGHAI TIANMA MICRO-ELECTRONICS Corporation.

5.2 Registr Write/Read Timing Parameter

a. Write to register

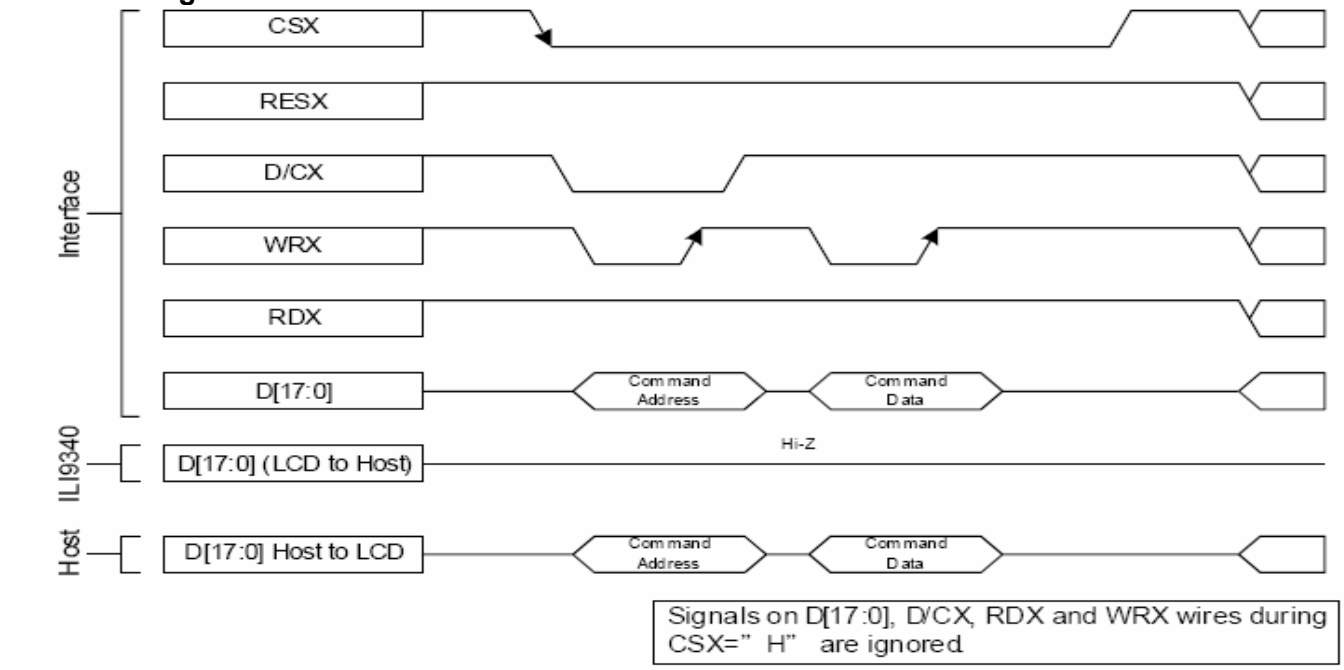

Figure 5.1 Register write timing in parallel bus system interface (for I80 series MPU)

b. Read to register

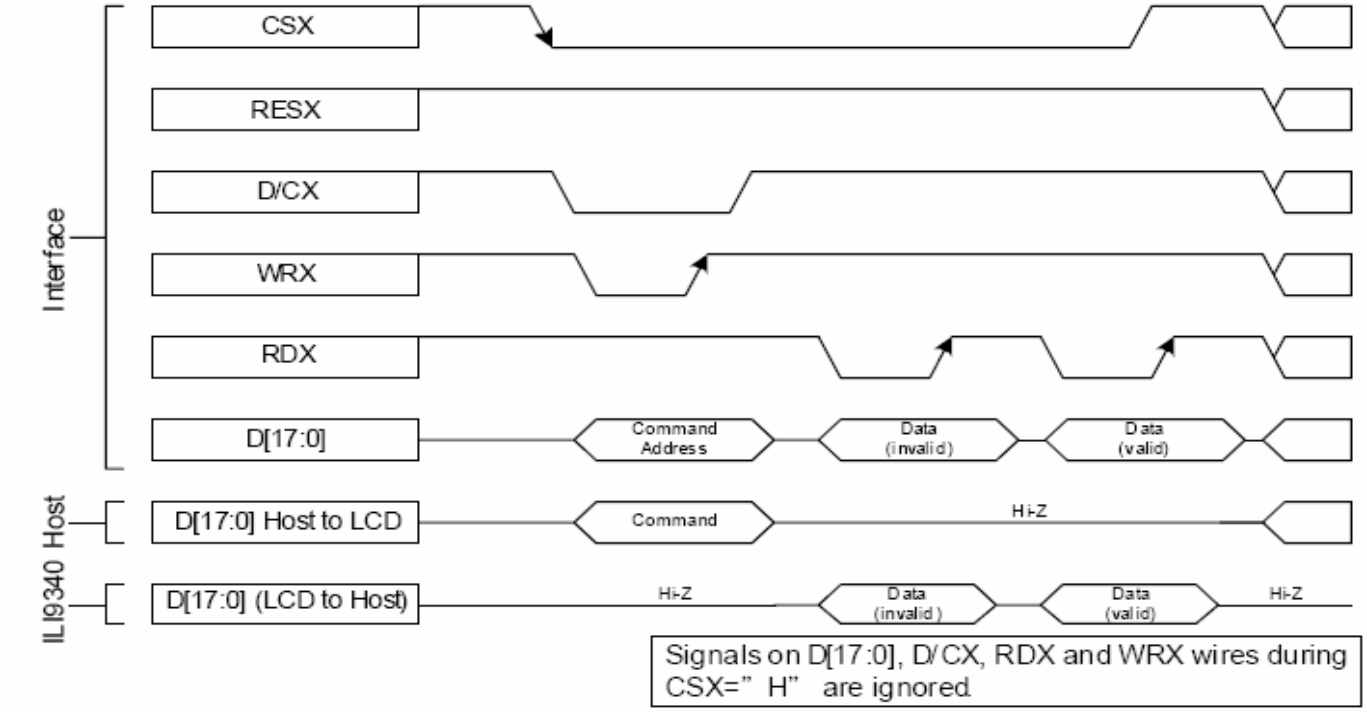

Figure 5.2 Register read timing in parallel bus system interface (for I80 series MPU)

The information contained herein is the exclusive property of SHANGHAI TIANMA MICRO-ELECTRONICS Corporation, and shall not be distributed, reproduced, or disclosed in whole or in part without prior written permission of SHANGHAI TIANMA MICRO-ELECTRONICS Corporation.

CSX timings

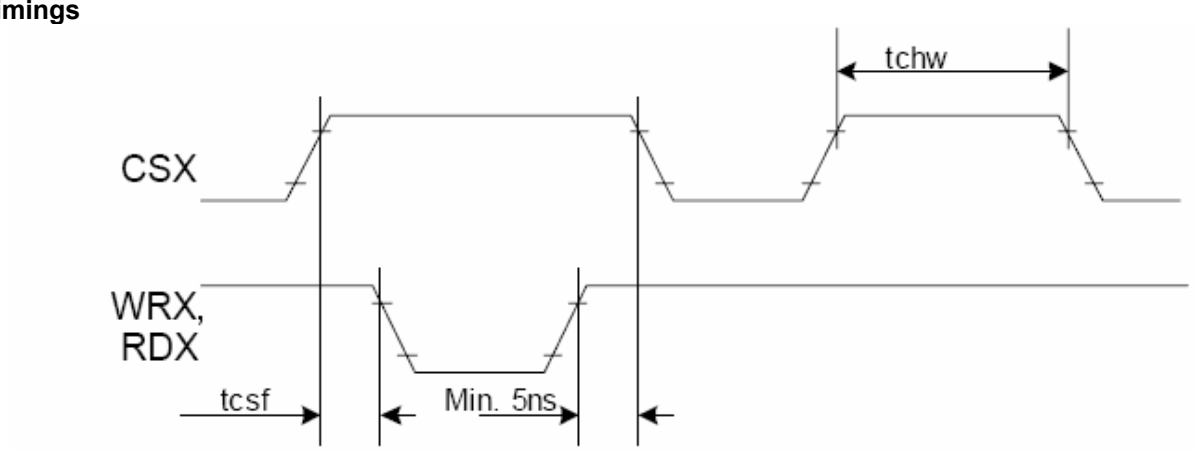

Write to read or read to write timings

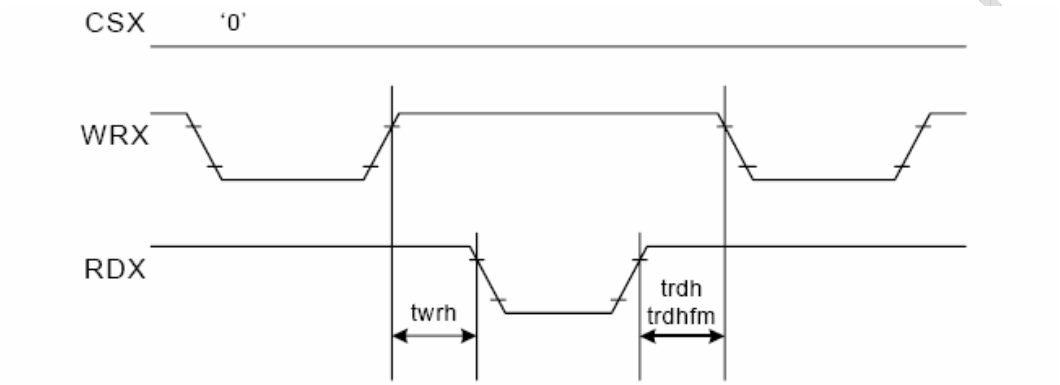

5.3 Reset Timing Characteristics

Ta=25℃

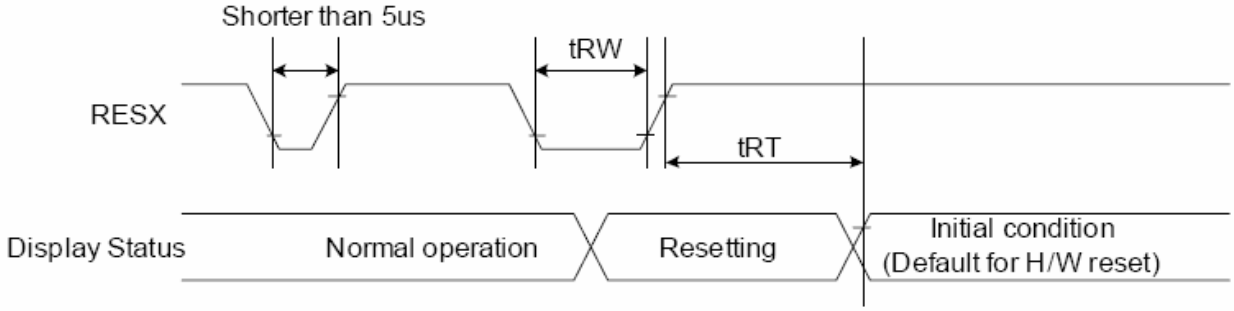

Signal	Symbol	Parameter	Min	Max	Unit
RESX	tRW	Reset pulse duration	10		uS
	tRT	Reset cancel		5 (note 1,5)	mS
				120 (note 1,6,7)	mS

The information contained herein is the exclusive property of SHANGHAI TIANMA MICRO-ELECTRONICS Corporation, and shall not be distributed, reproduced, or disclosed in whole or in part without prior written permission of SHANGHAI TIANMA MICRO-ELECTRONICS Corporation.

5.4 Power on/off Sequence

5.4.1 Power on sequence

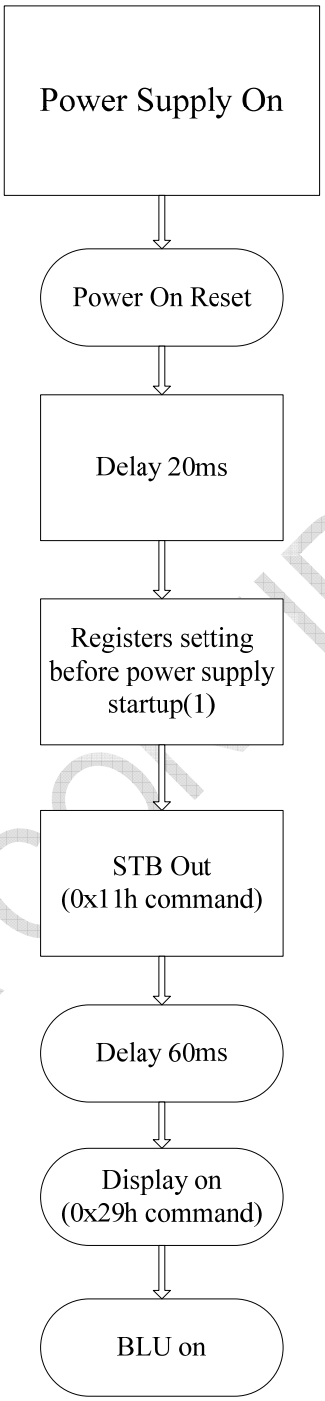

TIANMA CONFIDENTIAL

The information contained herein is the exclusive property of SHANGHAI TIANMA MICRO-ELECTRONICS Corporation, and shall not be distributed, reproduced, or disclosed in whole or in part without prior written permission of SHANGHAI TIANMA MICRO-ELECTRONICS Corporation.

5.4.2 Power off sequence

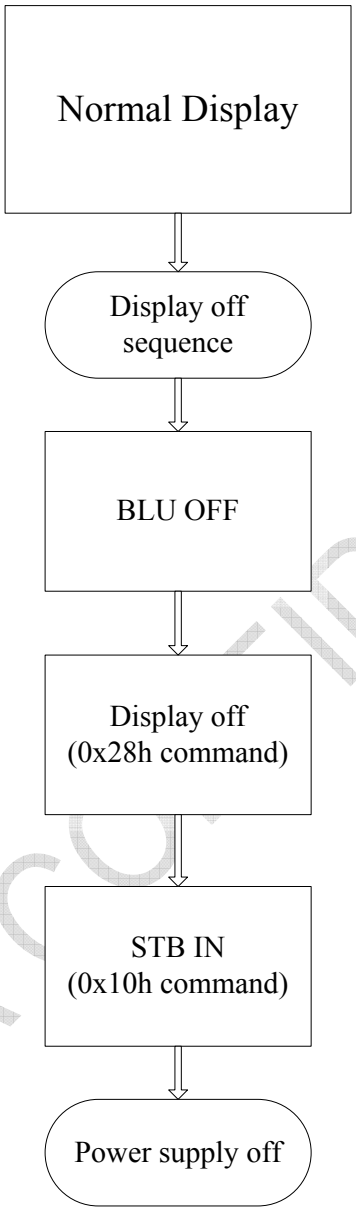

TIANMA CONFIDENTIAL

The information contained herein is the exclusive property of SHANGHAI TIANMA MICRO-ELECTRONICS Corporation, and shall not be distributed, reproduced, or disclosed in whole or in part without prior written permission of SHANGHAI TIANMA MICRO-ELECTRONICS Corporation.

6 Optical Characteristics

Ta=25℃

Item		Symbol	Condition	Min	Typ	Max	Unit	Remark
View Angles		θT	CR≧10	60	70	-	Degree	Note 2
		θB		50	60	-		
		θL		60	70	-		
		θR		60	70	-		
Contrast Ratio		CR	θ=0°	400	500	-		Note1 Note3
Response Time		Ton	25℃	-	20	30	ms	Note1 Note4
		Toff						
Chromaticity	White	x	Backlight is on	0.231	0.281	0.331		Note5, Note1
		y		0.258	0.308	0.358		
	Red	x		0.538	0.588	0.638		
		y		0.289	0.339	0.389		
	Green	x		0.278	0.328	0.378		
		y		0.531	0.581	0.631		
	Blue	x		0.099	0.149	0.199		
		y		0.050	0.100	0.150		
Uniformity		U		-	80	-	%	Note1 Note6
NTSC				-	50	-	%	Note 5
Luminance		L		160	180	-	cd/m^2	Note1 Note7

Test Conditions:

1. For one LED: V_F=3.2V, 1/3xI_F=20mA, the ambient temperature is 25℃.
2. The test systems refer to Note 1 and Note 2.

TIANMA CONFIDENTIAL

The information contained herein is the exclusive property of SHANGHAI TIANMA MICRO-ELECTRONICS Corporation, and shall not be distributed, reproduced, or disclosed in whole or in part without prior written permission of SHANGHAI TIANMA MICRO-ELECTRONICS Corporation.

Note 1: Definition of optical measurement system.

The optical characteristics should be measured in dark room. After 5 minutes operation, the optical properties are measured at the center point of the LCD screen. All input terminals LCD panel must be ground when measuring the center area of the panel.

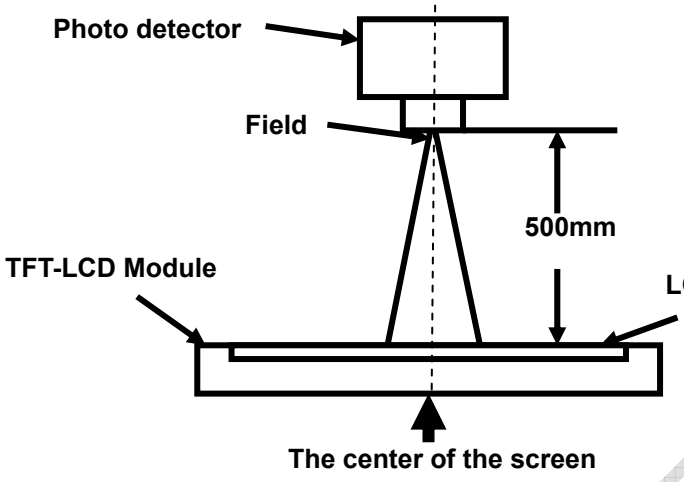

Item	Photo Detector	Field
Contrast Ratio	SR-3A	1°
Luminance		
Chromaticity		
Lum Uniformity		
Response Time	BM-7A	2°

Note 2: Definition of viewing angle range and measurement system.

viewing angle is measured at the center point of the LCD by CONOSCOPE(ergo-80)。

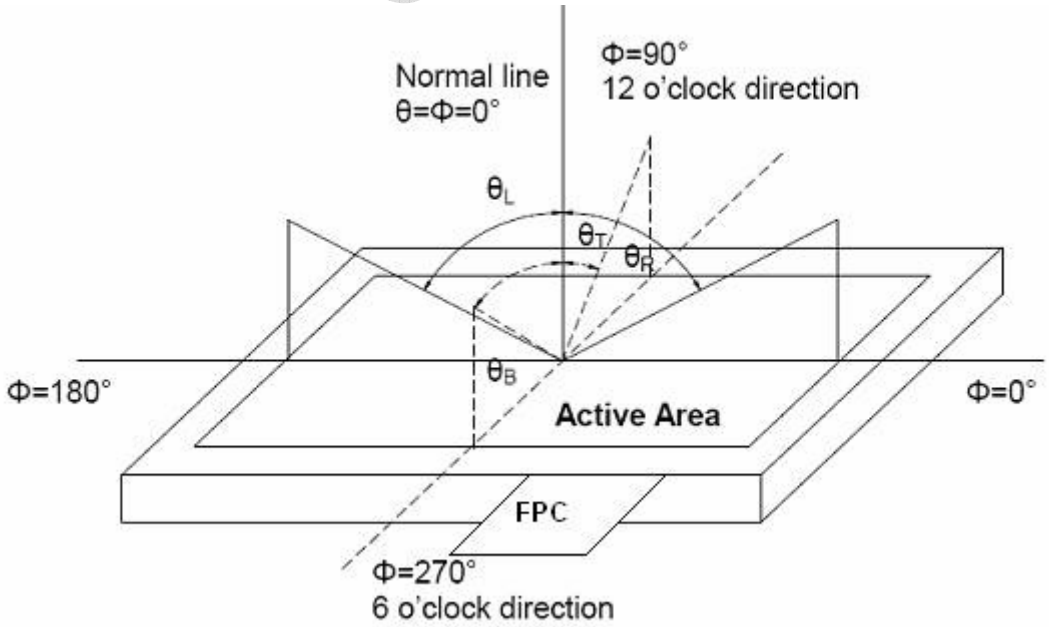

Fig. 1 Definition of viewing angle

The information contained herein is the exclusive property of SHANGHAI TIANMA MICRO-ELECTRONICS Corporation, and shall not be distributed, reproduced, or disclosed in whole or in part without prior written permission of SHANGHAI TIANMA MICRO-ELECTRONICS Corporation.

Note 3: Definition of contrast ratio

$$\text{Contrast ratio (CR)} = \frac{\text{Luminance measured when LCD is on the "White" state}}{\text{Luminance measured when LCD is on the "Black" state}}$$

“White state “:The state is that the LCD should driven by Vwhite.

“Black state”: The state is that the LCD should driven by Vblack.

Vwhite: To be determined Vblack: To be determined.

Note 4: Definition of Response time

The response time is defined as the LCD optical switching time interval between “White” state and “Black” state. Rise time (TON) is the time between photo detector output intensity changed from 90% to 10%. And fall time (TOFF) is the time between photo detector output intensity changed from 10% to 90%.

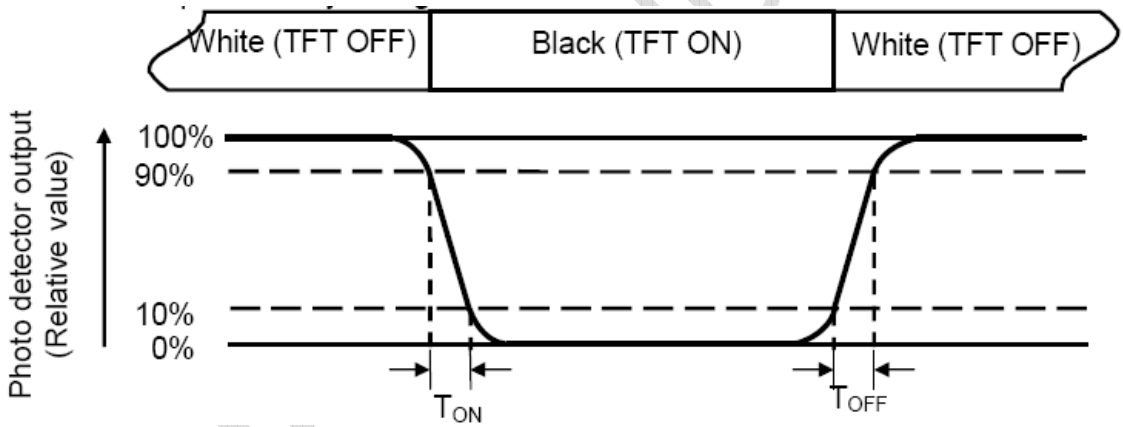

Note 5: Definition of color chromaticity (CIE1931)

Color coordinates measured at center point of LCD.

The information contained herein is the exclusive property of SHANGHAI TIANMA MICRO-ELECTRONICS Corporation, and shall not be distributed, reproduced, or disclosed in whole or in part without prior written permission of SHANGHAI TIANMA MICRO-ELECTRONICS Corporation.

Note 6: Definition of Luminance Uniformity

Active area is divided into 9 measuring areas (Refer Fig. 2). Every measuring point is placed at the center of each measuring area.

Luminance Uniformity(U) = Lmin/ Lmax

L-------Active area length W----- Active area width

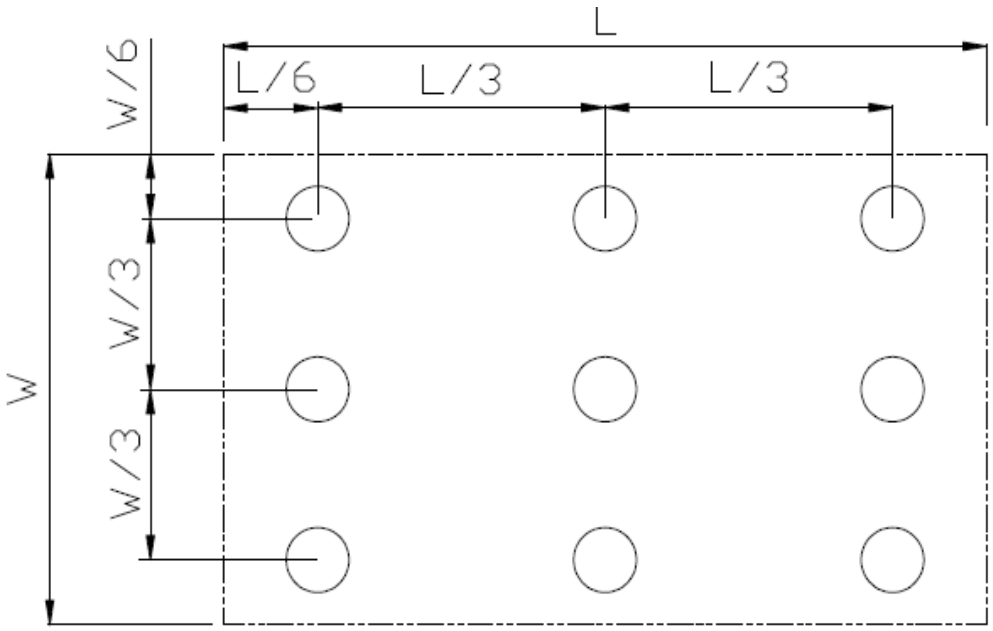

Fig. 2 Definition of uniformity

Lmax: The measured maximum luminance of all measurement position.

Lmin: The measured minimum luminance of all measurement position.

Note 7: Definition of Luminance:

Measure the luminance of white state at center point.

The information contained herein is the exclusive property of SHANGHAI TIANMA MICRO-ELECTRONICS Corporation, and shall not be distributed, reproduced, or disclosed in whole or in part without prior written permission of SHANGHAI TIANMA MICRO-ELECTRONICS Corporation.

7 Environmental / Reliability Tests

No	Test Item	Condition	Remarks
1	High Temperature Operation	Ts=+60℃, 240hrs	Note1 IEC60068-2-1:2007,GB2423.2-2008
2	Low Temperature Operation	Ta=-20℃, 240hrs	IEC60068-2-1:2007 GB2423.1-2008
3	High Temperature Storage	Ta=+70℃, 240hrs	IEC60068-2-1:2007 GB2423.2-2008
4	Low Temperature Storage	Ta=-30℃, 240hrs	IEC60068-2-1:2007 GB2423.1-2008
5	High Temperature & High Humidity Storage	Ta=+60℃, 90% RH 240 hours	Note2 IEC60068-2-78 :2001 GB/T2423.3—2006
6	Thermal Shock (Non-operation)	-30℃ 30 min~+70℃ 30 min, Change time:5min, 20 Cycles	Start with cold temperature, End with high temperature, IEC60068-2-14:1984,GB2423.22-2002
7	Electro Static Discharge (Operation)	C=150pF, R=330Ω，5points/panel Air:±8KV, 5times; Contact:±4KV, 5 times; （Environment: 15℃～35℃, 30%～60%, 86Kpa～106Kpa）	IEC61000-4-2:2001 GB/T17626.2-2006
8	Vibration (Non-operation)	Frequency range:10~55Hz, Stroke:1.5mm Sweep:10Hz~55Hz~10Hz 2 hours for each direction of X.Y.Z. (6 hours for total) (Package condition)	IEC60068-2-6:1982 GB/T2423.10—1995
9	Shock (Non-operation)	60G 6ms, ±X,±Y,±Z 3times, for each direction	IEC60068-2-27:1987 GB/T2423.5—1995
10	Package Drop Test	Height:80 cm, 1 corner, 3 edges, 6 surfaces	IEC60068-2-32:1990 GB/T2423.8—1995

Note1: Ts is the temperature of panel's surface.

Note2: Ta is the ambient temperature of sample.

TIANMA CONFIDENTIAL

The information contained herein is the exclusive property of SHANGHAI TIANMA MICRO-ELECTRONICS Corporation, and shall not be distributed, reproduced, or disclosed in whole or in part without prior written permission of SHANGHAI TIANMA MICRO-ELECTRONICS Corporation.

8 Mechanical Drawing

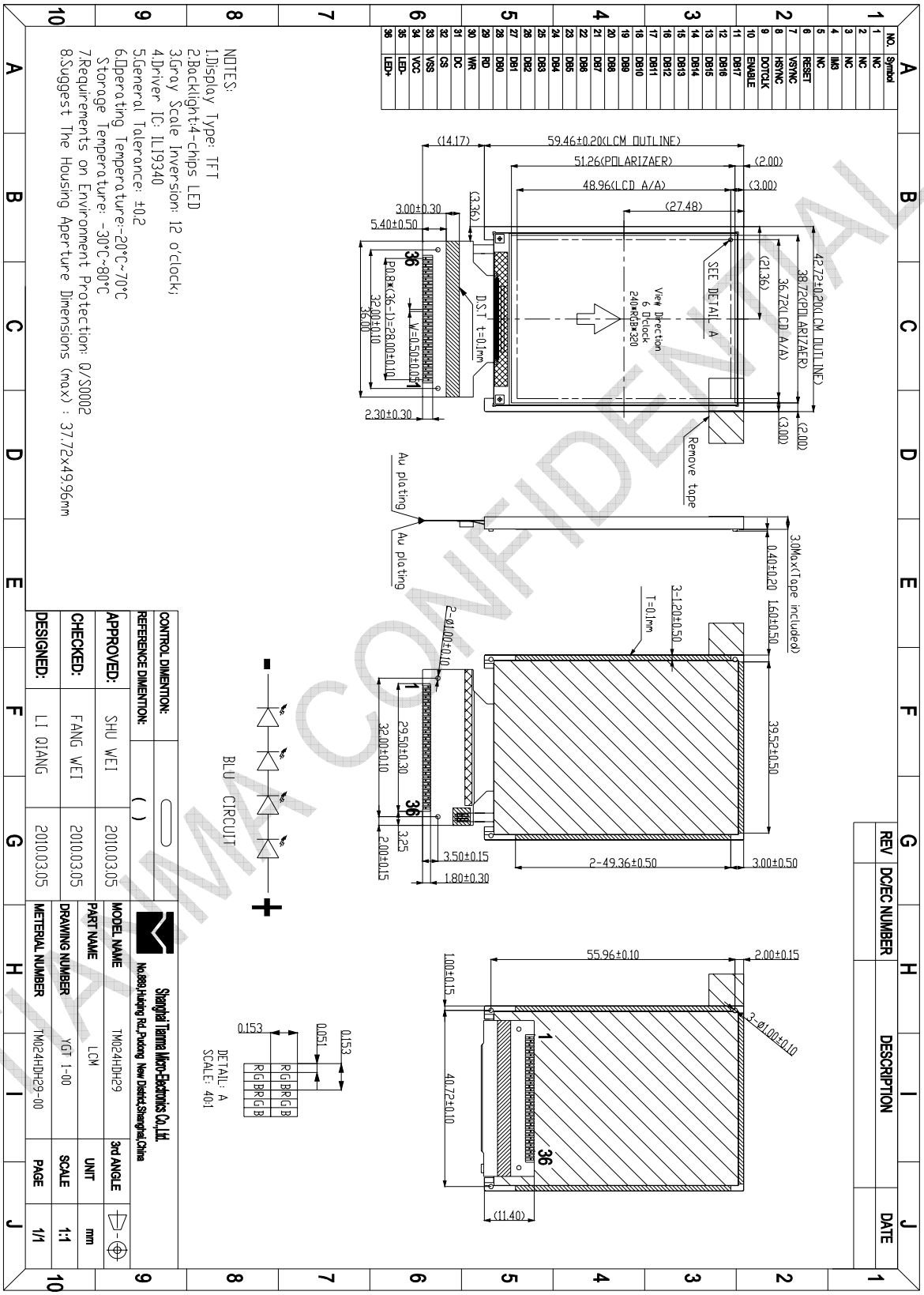

TIANMA CONFIDENTIAL

The information contained herein is the exclusive property of SHANGHAI TIANMA MICRO-ELECTRONICS Corporation, and shall not be distributed, reproduced, or disclosed in whole or in part without prior written permission of SHANGHAI TIANMA MICRO-ELECTRONICS Corporation.

9 Packing Drawing

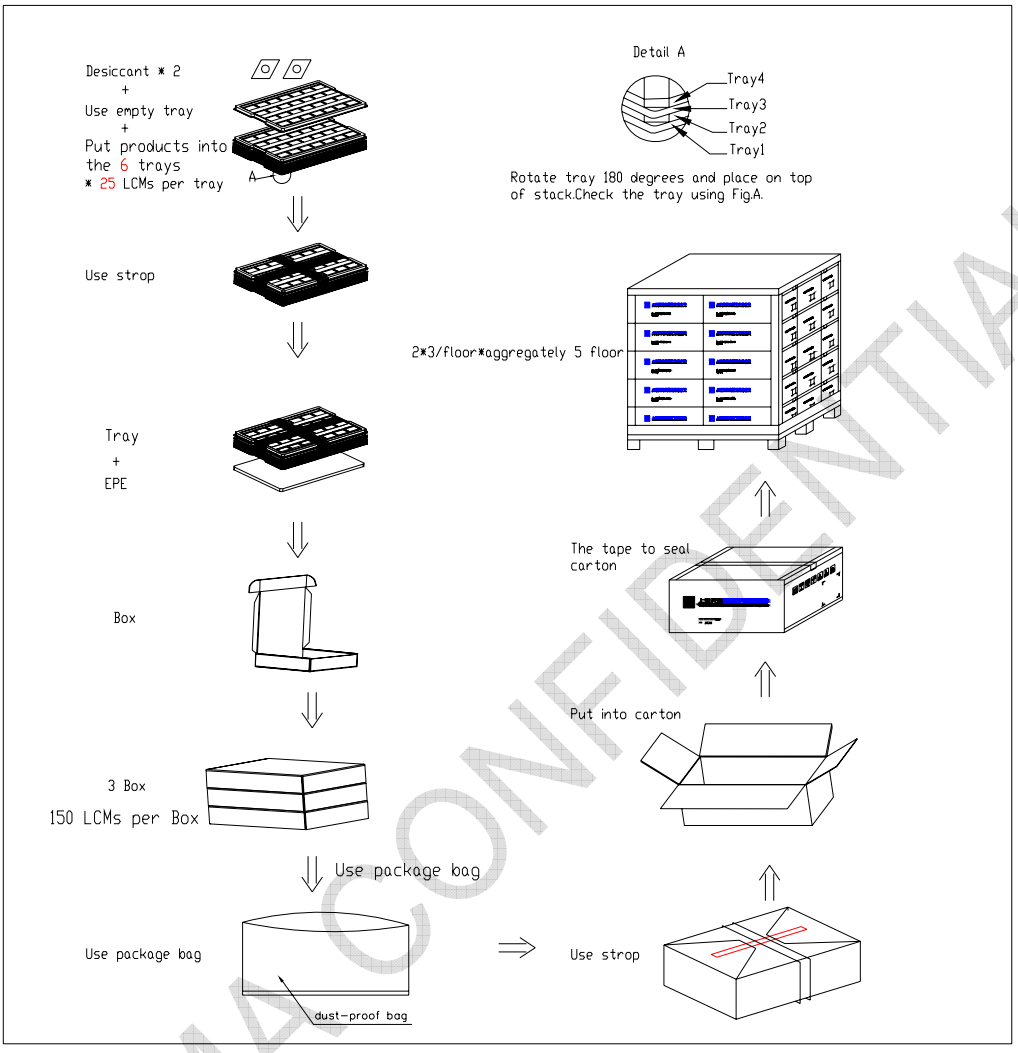

TIANMA CONFIDENTIAL

The information contained herein is the exclusive property of SHANGHAI TIANMA MICRO-ELECTRONICS Corporation, and shall not be distributed, reproduced, or disclosed in whole or in part without prior written permission of SHANGHAI TIANMA MICRO-ELECTRONICS Corporation.

10 Precautions for Use of LCD Modules

11.1 Handling Precautions

11.1.1 The display panel is made of glass. Do not subject it to a mechanical shock by dropping it from a high place, etc.

11.1.2 If the display panel is damaged and the liquid crystal substance inside it leaks out, be sure not to get any in your mouth, if the substance comes into contact with your skin or clothes, promptly wash it off using soap and water.

11.1.3 Do not apply excessive force to the display surface or the adjoining areas since this may cause the color tone to vary.

11.1.4 The polarizer covering the display surface of the LCD module is soft and easily scratched. Handle this polarizer carefully.

11.1.5 If the display surface is contaminated, breathe on the surface and gently wipe it with a soft dry cloth. If still not completely clear, moisten cloth with one of the following solvents:

- Isopropyl alcohol、
- Ethyl alcohol

Solvents other than those mentioned above may damage the polarizer. Especially, do not use the following:

- Water
- Ketone
- Aromatic solvents

11.1.6 Do not attempt to disassemble the LCD Module.

11.1.7 If the logic circuit power is off, do not apply the input signals.

11.1.8 To prevent destruction of the elements by static electricity, be careful to maintain an optimum work environment.

11.1.8.1 Be sure to ground the body when handling the LCD Modules.

11.1.8.2 Tools required for assembly, such as soldering irons, must be properly ground.

11.1.8.3 To reduce the amount of static electricity generated, do not conduct assembly and other work under dry conditions.

11.1.8.4 The LCD Module is coated with a film to protect the display surface. Be care when peeling off this protective film since static electricity may be generated.

11.2 Storage precautions

11.2.1 When storing the LCD modules, avoid exposure to direct sunlight or to the light of fluorescent lamps.

11.2.2 The LCD modules should be stored under the storage temperature range. If the LCD modules will be stored for a long time, the recommend condition is:

Temperature : 0℃ ～ 40℃ Relatively humidity: ≤80%

11.2.3 The LCD modules should be stored in the room without acid, alkali and harmful gas.

11.3 Transportation Precautions:

The LCD modules should be no falling and violent shocking during transportation, and also should avoid excessive press, water, damp and sunshine.

TIANMA CONFIDENTIAL

The information contained herein is the exclusive property of SHANGHAI TIANMA MICRO-ELECTRONICS Corporation, and shall not be distributed, reproduced, or disclosed in whole or in part without prior written permission of SHANGHAI TIANMA MICRO-ELECTRONICS Corporation.