MODEL NO. : TM035KDH03

ISSUED DATE: 2009-10-21

VERSION : Ver 1.3

□**Preliminary Specification**
■**Final Product Specification**

Customer :

Approved by	Notes

SHANGHAI TIANMA Confirmed :

Prepared by	Checked by	Approved by
2009.10.21	2009.10.21	

This technical specification is subjected to change without notice

Table of Contents

Record of Revision

Rev	Issued Date	Description	Editor
1.0	2008-10-21	Preliminary release.	Lei Peng
1.0	2008-12-11	Final release.	Lei Peng
1.1	2009-2-24	Update the Characteristics Data.	ChenYanguang
1.2	2009-10-16	Change recommended connector	Li Qiang
1.3	2009-10-21	Update the Power on and Power off sequence	Yu Zhihua

1. General Specifications

Feature		Spec
Display Spec.	Size	3.5inch
	Resolution	320(RGB) X 240
	Interface	RGB/CCIR656/601
	Color Depth	24bit
	Technology type	a-Si
	Pixel pitch (mm)	0.219 x 0.219
	Display colors	16.7M Dithering
	Pixel Configuration	R.G.B. Vertical Stripe
	Display Mode	TM with Normally White
	Surface Treatment	Clear Type. 3H
	Viewing Direction	12 o'clock
	Gray Scale Inversion Direction	6 o'clock
Mechanical Characteristics	LCM (W x H x D) (mm)	76.9*63.9*3.15
	Active Area(mm)	70.08 x 52.56
	With /Without TSP	Without TSP
	Weight (g)	29.3
	LED Numbers	6 LEDs Seril
	Driver IC	Novatek NT39016D

Note 1:Viewing direction for best image quality is different from TFT definition, there is a 180 degree shift.

Note 2 : Requirements on Environmental Protection: Q/S0002

Note 3: LCM weight tolerance: ± 5%

2. Input/Output Terminals

5.1 TFT LCD Panel

Recommend connector: Kyocera elco:6240 serials

No	Symbol	I/O/P	Description	Remarks
1	LED_Cathode	P	LED_Cathode	Note2-1
2	LED_Cathode	P	LED_Cathode	
3	LED_Anode	P	LED_Anode	
4	LED_Anode	P	LED_Anode	
5	NC	-	No Connect	
6	NC	-	No Connect	
7	NC	-	No Connect	
8	RESET	I	Reset	
9	SPENA	I	Serial port data enable signal	
10	SPCK	I	SPI Serial Clock	
11	SPDA	I/O	SPI Serial Data Input/output	
12	D00	I	Data 00	Note 2-2
13	D01	I	Data 01	Note 2-2
14	D02	I	Data 02	Note 2-2
15	D03	I	Data 03	Note 2-2
16	D04	I	Data 04	Note 2-2
17	D05	I	Data 05	Note 2-2
18	D06	I	Data 06	Note 2-2
19	D07	I	Data 07	Note 2-2
20	D08	I	Data 08	Note 2-2
21	D09	I	Data 09	Note 2-2
22	D10	I	Data 10	Note 2-2
23	D11	I	Data 11	Note 2-2
24	D12	I	Data 12	Note 2-2
25	D13	I	Data 13	Note 2-2
26	D14	I	Data 14	Note 2-2
27	D15	I	Data 15	Note 2-2
28	D16	I	Data 16	Note 2-2

29	D17	I	Data 17	Note 2-2
30	D18	I	Data 18	Note 2-2
31	D19	I	Data 19	Note 2-2
32	D20	I	Data 20	Note 2-2
33	D21	I	Data 21	Note 2-2
34	D22	I	Data 22	Note 2-2
35	D23	I	Data 23	Note 2-2
36	HSYNC	I	Horizontal Synchronous Signal	
37	VSYNC	I	Vertical Synchronous Signal	
38	CLK	I	Data Clock	
39	NC	-	No Connect	
40	NC	-	No Connect	
41	VDD	P	power supply（3.3V）	
42	VDD	P	power supply（3.3V）	
43	NC	-	No Connect	
44	NC	-	No Connect	
45	NC	-	No Connect	
46	NC	-	No Connect	
47	NC	-	No Connect	
48	NC	-	No Connect	
49	NC	-	No Connect	
50	NC	-	No Connect	
51	NC	-	No Connect	
52	DEN	I	Data enabling signal	
53	GND	P	Ground	
54	GND	P	Ground	

Note2-1: I/O definition:

I-----Input O---Output P----Power/ Ground NC--- Not Connected

Note2-2:

Mode	D(23:16)	D(15:08)	D(07:00)	HSYNC	VSYNC	DEN
ITU-R BT 656	D(23:16)	GND	GND	NC	NC	NC
ITU-R BT 601	D(23:16)	GND	GND	HSYNC	VSYNC	NC
8 Bit RGB	D(23:16)	GND	GND	HSYNC	VSYNC	NC for HV Mode DEN for Den Mode
24 Bit RGB	R(7:0)	G(7:0)	B(7:0)	HSYNC	VSYNC	NC for HV Mode DEN for Den Mode

3 Absolute Maximum Ratings

3.1 Driving TFT LCD Panel

Ta = 25℃

Item	Symbol	MIN	MAX	Unit	Remark
Supply Voltage	VDD	-0.3	5.0	V	
Operating Temperature	T_{OPR}	-20	60	℃	
Storage Temperature	T_{STG}	-30	70	℃	

4 Electrical Characteristics

4.1 Driving TFT LCD Panel

GND=0V, Ta=25℃

Item		Symbol	MIN	TYP	MAX	Unit	Remark
Supply Voltage		VDD	3.0	3.3	3.6	V	
Input Signal Voltage	Low Level	V_{IL}	GND	-	0.3* VDD	V	
	High Level	V_{IH}	0.7* VDD	-	VDD	V	
Power Consumption (Panel+LSI)		Full Mode (60HZ)	-	35	50	mW	
		Stand-by Mode	-	0.12	0.17	mW	

4.2 Driving Backlight

Ta=25℃

Item	Symbol	MIN	TYP	MAX	Unit	Remark
Forward Current	I_F	--	20	25	mA	
Forward Current Voltage	V_F	16.8	19.2	21.6	V	
Backlight Power Consumption	W_{BL}	--	384	510	mW	
Operating Life Time	--	10000	(20000)	--	Hrs	

Note 1: The figure below shows the connection of backlight LED.

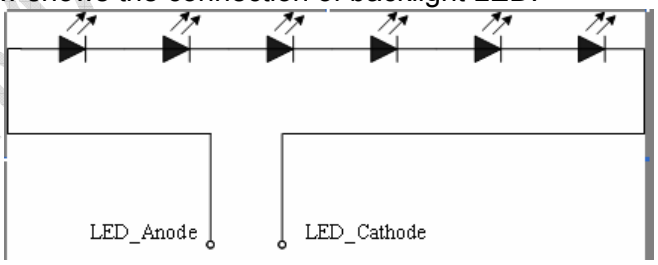

Note 2: Each LED : I_F =20 mA, V =3.2V

Note 3: IF is defined for one channel LED.
Optical performance should be evaluated at Ta=25℃ only.
If LED is driven by high current, high ambient temperature & humidity condition, the life time of LED will be reduced.
Operating life means brightness goes down to 50% initial brightness. Typical operating life time is estimated data.

4.3 Block Diagram

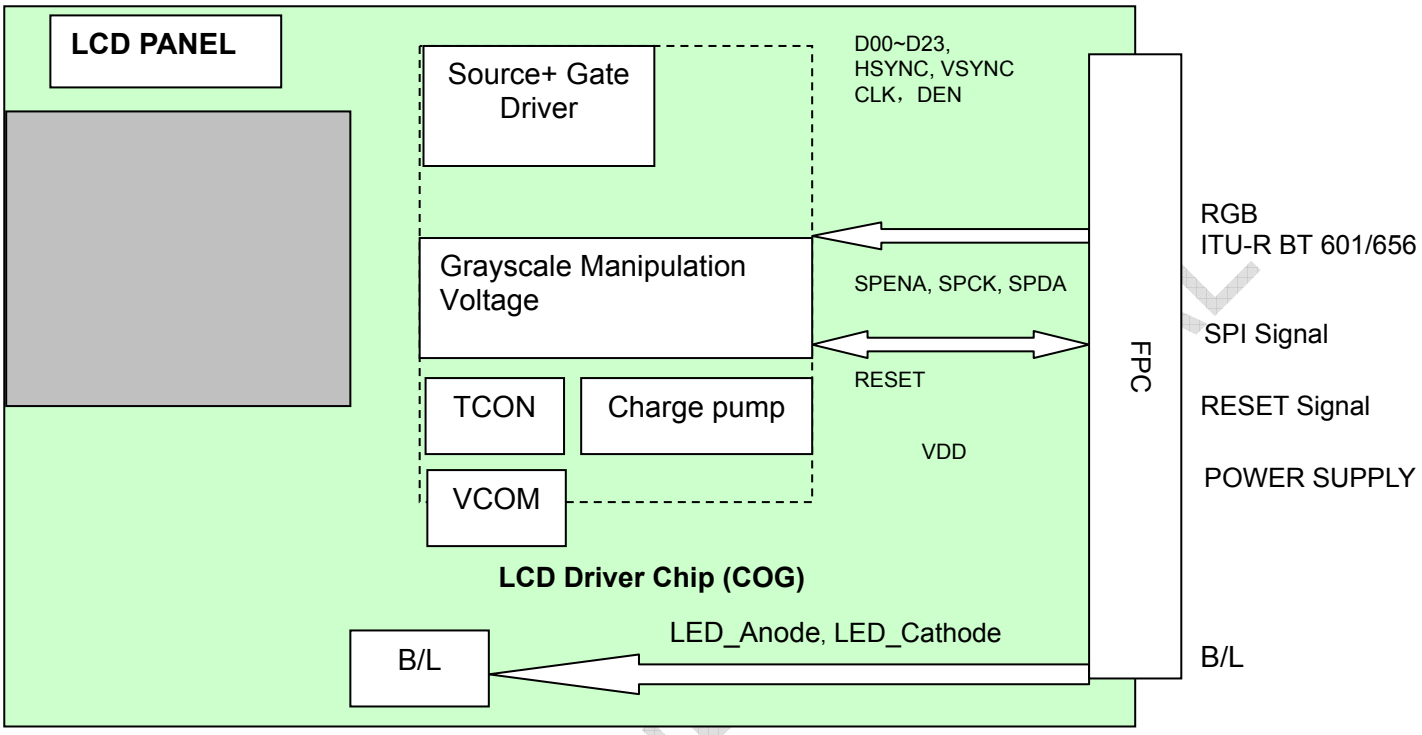

5 Timing Chart

5.1 Timing Parameter

(VCC=3.3V GND =0V,Ta=25℃)

Parameter	Symbol	Min	Typ	Max	Unit	Condition
CLK Clock Time	T_{clk}	1/Max(F_{clk})	--	1/Min(F_{clk})	ns	
CLK Pulse Duty	T_{chw}	40	50	60	%	T_{clk}
HSYNC to CLK	T_{hc}	--	--	1	CLK	--
HSYNC Width	T_{hwh}	1	--	--	CLK	--
VSYNC Width	T_{vwh}	1	--	--	ns	--
HSYNC Period Time	T_h	60	63.56	67	ns	--
VSYNC Set-up Time	T_{vst}	8	--	--	ns	--
VSYNC Hold Time	T_{vhd}	10	--	--	ns	--
HSYNC Setup Time	T_{hst}	8	--	--	ns	--
HSYNC Hold Time	T_{hhd}	10	--	--	ns	--
Data Set-up Time	T_{dsu}	8	--	--	ns	D00~D23 to CLK
Data Hold Time	T_{dhd}	10	--	--	ns	D00~D23 to CLK
DEN Set up Time	T_{esu}	12	--	--	ns	DEN to CLK

Note: Each CLK Frequency of 24 Bit RGB Mode,8 Bit RGB Mode,CCIR601and CCIR656 are different.

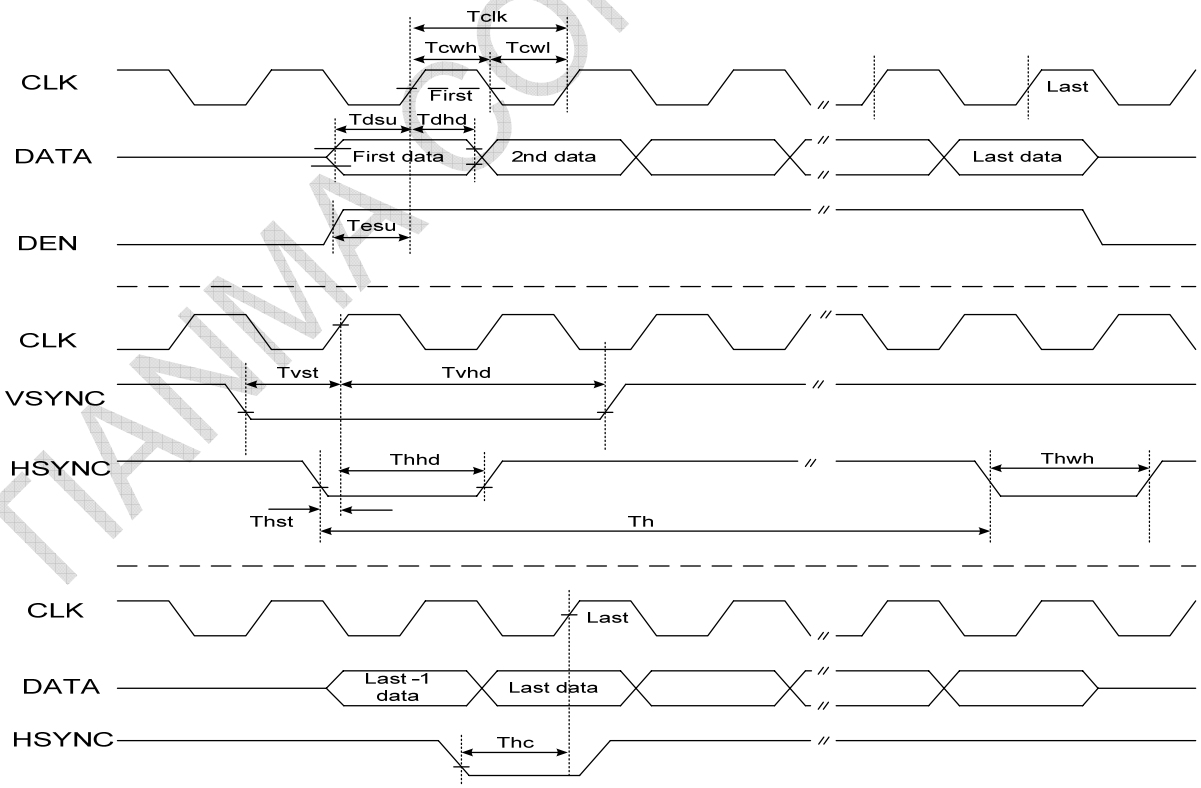

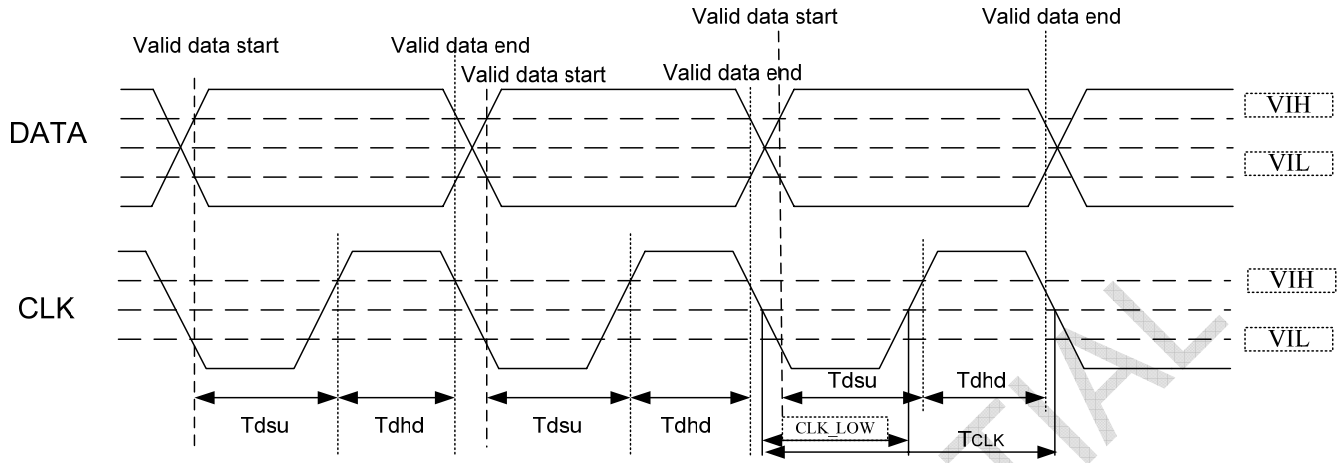

Tdsu>=8ns;Tdhd>=10ns;Tclk(Typical value)=1/(27*1000*1000)s=37ns;

5.2 24 Bit RGB Mode for 320RGB x 240

Parameter	Symbol	Min	Typ	Max	Unit	Condition
CLK Frequency	F_{clk}	6.1	6.4	8.0	MHz	VCC=3.0V~3.6V
CLK Cycle Time	T_{clk}	125	156	164	ns	
CLK Pulse Duty	T_{cwh}	40	50	60	%	
Time that HSYNC to 1 st data input(NTSC)	T_{hs}	40	70	255	CLK	DDLY =70, Offset = 0 (fixed)

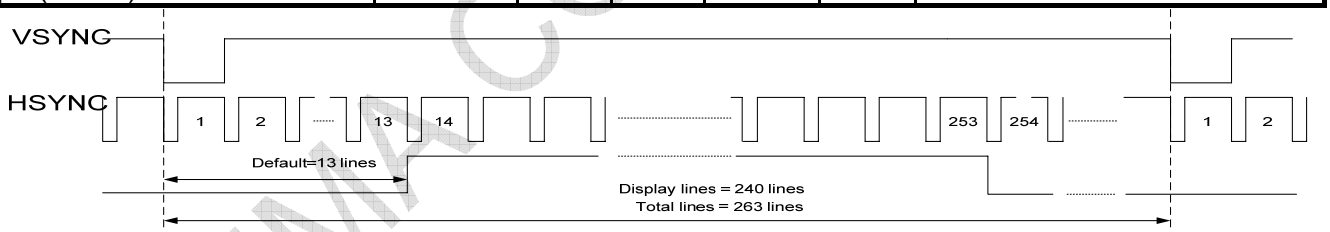

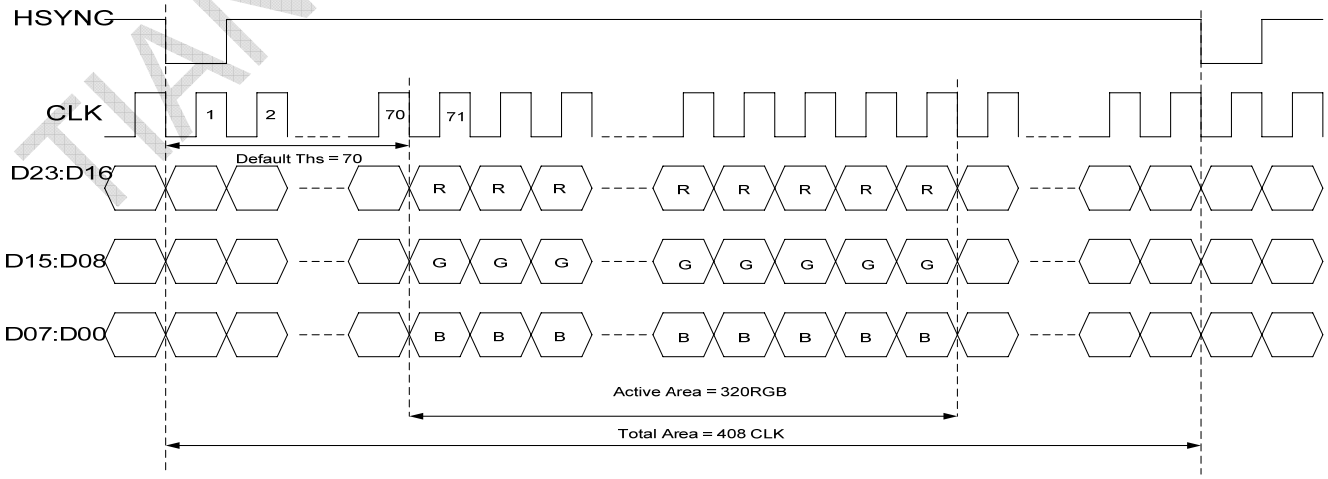

8 Bit RGB Mode for 320RGB x 240

Parameter	Symbol	Min	Typ	Max	Unit	Condition
CLK Frequency	Fclk	--	27	30	MHz	VCC=3.0~3.6V
CLK Cycle Time	Tclk	--	37	--	ns	
Time that HSYNC to 1'st data input(NTSC)	Ths	35	70	255	CLK	DDLY = 70, Offset = 0 (fixed)

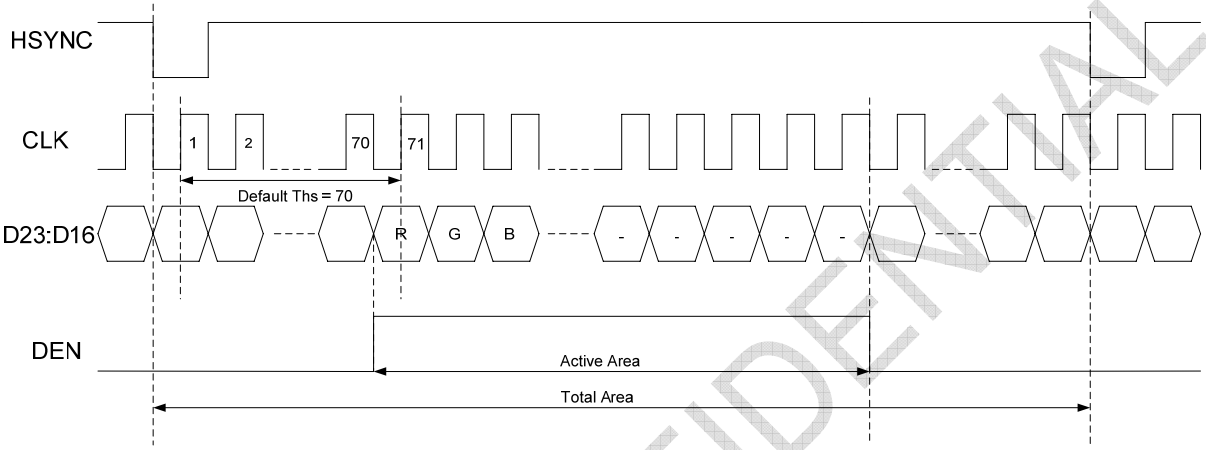

5.3 CCIR601

Parameter	Symbol	Min	Typ	Max	Unit	Condition
CLK Frequency	F_{clk}	--	24.54/ 27	30	MHz	VCC=3.0V~3.6V
CLK Cycle Time	T_{clk}	--	40/37	--	ns	
Time From HSYNC to1 st data input(PAL)	T_{hs}	128	264	--	CLK	DDLY = 136, Offset = 128 (fixed)
Time From HSYNC to1 st data input(NTSC)	T_{hs}	128	244	--	CLK	DDLY = 116, Offset = 128 (fixed)

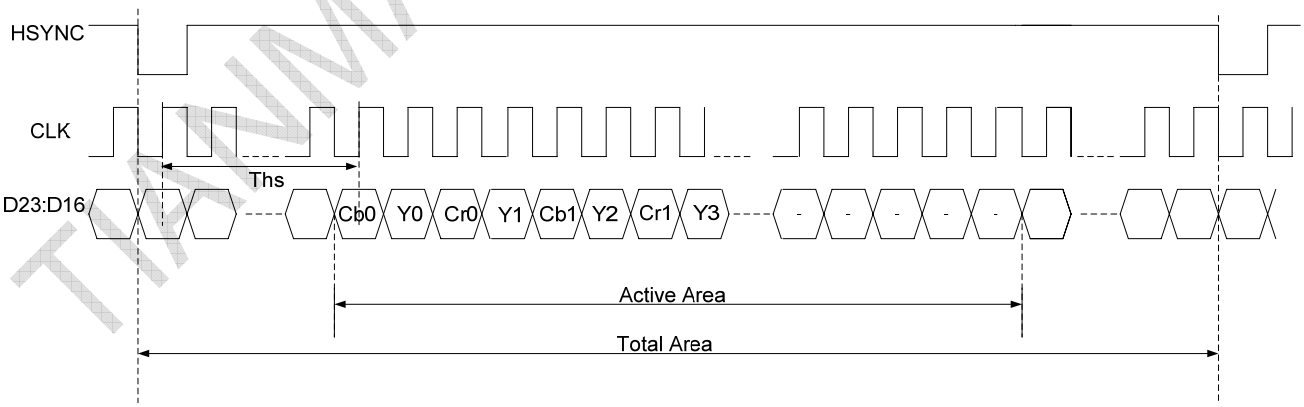

5.4 CCIR656

Parameter	Symbol	Min	Typ	Max	Unit	Condition
CLK Frequency	Fclk	--	27	30	MHz	VCC=3.0V~3.6V
CLK Cycle Time	Tclk	--	37	--	ns	
Time that EVA to 1'st data input(PAL)	Ths	128	288	--	CLK	DDLY = 152, Offset = 128 (fixed)
Time that EVA to1'stdatainput(NTSC)	Ths	128	276	--	CLK	DDLY = 140, Offset = 128 (fixed)

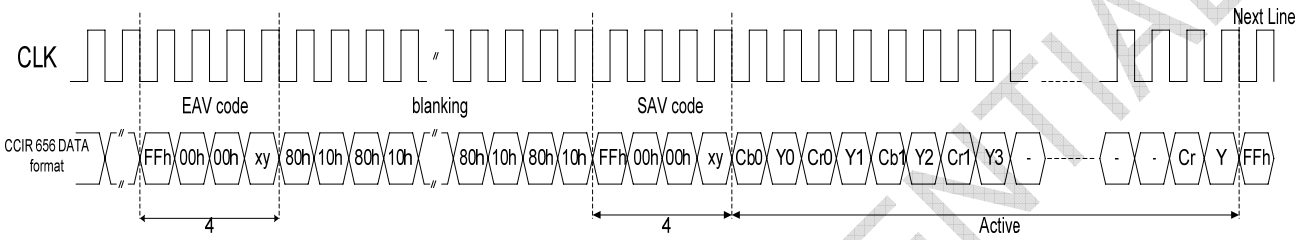

5.5 3-Wire Serial Communication AC Timing

Parameter	Symbol	Min	Typ	Max	Unit	Remark
Serial Clock	T_{SPCK}	320	--	--	ns	
SPCK Pulse Duty	T_{scdut}	40	50	60	%	
Serial Data Setup Time	T_{isu}	120	--	--	ns	
Serial Data Hold Time	T_{ihd}	120	--	--	ns	
Serial Clock High/Low	T_{ssw}	120	--	--	ns	
Chip Select Distinguish	T_{cd}	1	--	--	us	

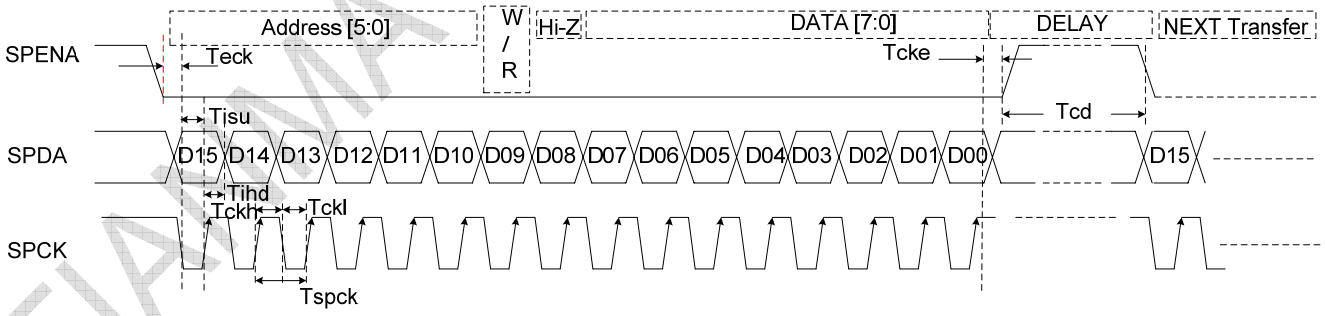

Note：DDLY Description (Ths= DDLY+ Offset)

R04: Source Timing Delay Control Register

Bit	Name	Initial	Description
Bit [7:0]	DDLY[7:0]	46h	Select the HSD signal to 1'st input data delay timing Under CCIR601 mode, Ths = DDLY[7:0] + 128, (Unit = CLKIN) Under CCIR656 mode, Ths = DDLY[7:0] + 136, (Unit = CLKIN) Under RGB 8/24 bit mode, Ths = DDLY[7:0] , (Unit = CLKIN) The register value will be update to the different mode,such as 24RGB,8RGB,CCIR mode. Read the section of "24RGB, 8RGB, CCIR mode" for the detail.

3-Wire Command Format:

Bit	Description
D15-D10	Register Address [5:0].
D9	W/R control bit. "1" for Write; "0" for Read
D8	Hi-Z bit during read mode. Any data within this bit will be ignored during write mode
D7-D0	Data for the W/R operation to the addressing indicated by Address phase

3-Wire Writer Format:

MSB															LSB
D15	D14	D13	D12	D11	D10	D9	D8	D7	D6	D5	D4	D3	D2	D1	D0
Register Address [5:0]						1	X	DATA (Issue by external controller)							

3-Wire Read Format:

MSB															LSB
D15	D14	D13	D12	D11	D10	D9	D8	D7	D6	D5	D4	D3	D2	D1	D0
Register Address [5:0]						0	Hi-Z	DATA (Issue by NT39016)							

5.6 3-Wire Control Registers List

3-Wire Registers		Register Description		
D[15:10]	Name	Init	R/W	Function Description
000000b	R00	07h	R/W	System control register
000001b	R01	00h	R/W	Timing controller function register
000010b	R02	03h	R/W	Operation control register
000011b	R03	CCh	R/W	Input data Format control register
000100b	R04	46h	R/W	Source timing delay control register
000101b	R05	0Dh	R/W	Gate timing delay control register
000110b	R06	00h	R/W	Reserved
000111b	R07	00h	R/W	Internal function control register
001000b	R08	08h	R/W	RGB contrast control register
001001b	R09	40h	R/W	RGB brightness control register
001010b	R0A	88h	R/W	Hue/Saturation control register
001011b	R0B	88h	R/W	R/B sub-contrast control register
001100b	R0C	20h	R/W	R sub-brightness control register
001101b	R0D	20h	R/W	B sub-brightness control register
001110b	R0E	10h	R/W	VCOMDC level control register
001111b	R0F	24h	R/W	VGL/VGH VOCMAC level control register
010000b	R10	04h	R/W	VGAM2 level control register
010001b	R11	24h	R/W	VGAM3/4 level control register

010010b	R12	24h	R/W	VGAM5/6 level control register
011110b	R1E	00h	R/W	VCOMDC Trim function control register
100000b	R20	00h	R/W	Wide and narrow display mode control register

Note :

R03: c4h:CCIR656 Mode

c2h:CCIR601 Mode

c8h:8 bit RGB Mode(HV Mode)

c9h:8 bit RGB Mode(DEN Mode)

cch(default):24 bit RGB Mode (HV mode)

cdh:24 bit RGB Mode (DEN mode)

R0F: A4h(default):VGH=15V,VGL=-10V. 24h(recommend): VGH=15V,VGL=-7V.

5.7 Reset Timing

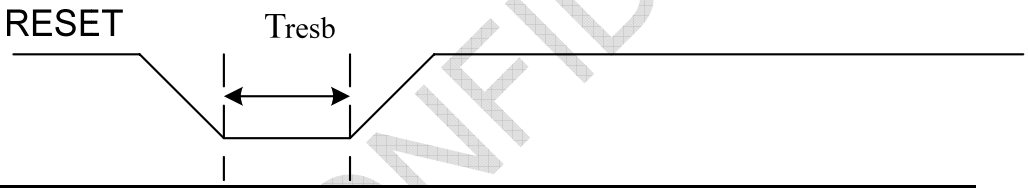

Parameter	Min	Typ	Max	Unit	Conditions
Tresb	40	-----	----	us	VCC = 3.3V

5.8 Power On Sequence

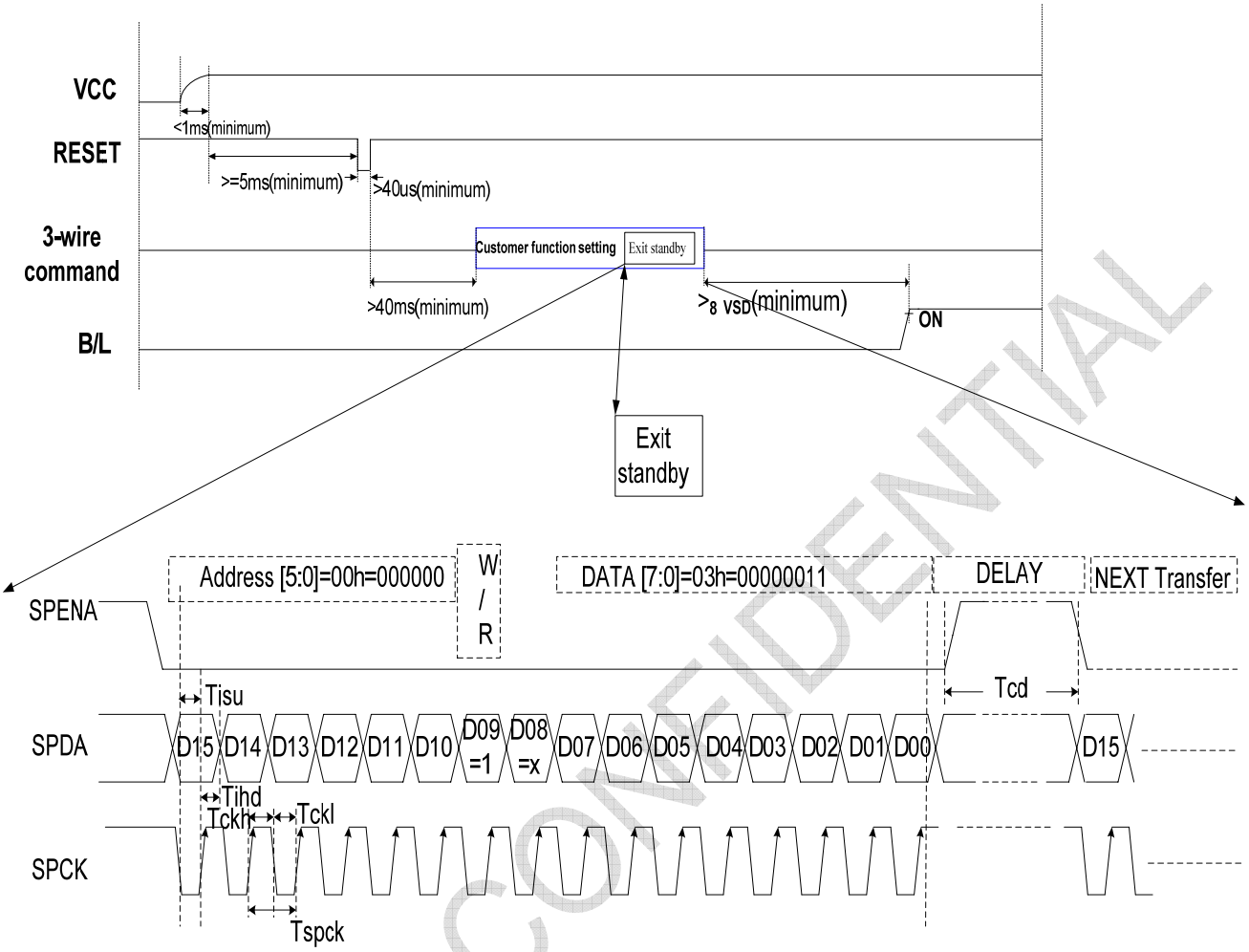

Note

1. Please exit to Standby Mode through 3-wire command, detail sequence that exit to Standby Mode under power on mode presentation as below.
2. Exit to standby mode, you can write data “0x03” to register “R00”, D09=1 for writing data to register. D09=0 for reading data from register.
   Under SPI write mode,D08=X , and ‘X’ means don’t care D08=‘1’ or ‘0’.

Parameter	Symbol	Min	Typ	Max	Unit	Remarks
Serial Clock	Tspck	320	-	-	ns	
SPCK Pulse Duty	Tscdut	40	50	60	%	
Serial Data Setup Time	Tisu	120	-	-	ns	
Serial Data Hold Time	Tihd	120	-	-	ns	
Serial Clock High/Low	Tssw	120	-	-	ns	Tckh or Tckl
Chip Select Distinguish	Tcd	1	-	-	us	

5.9 Power off Sequence

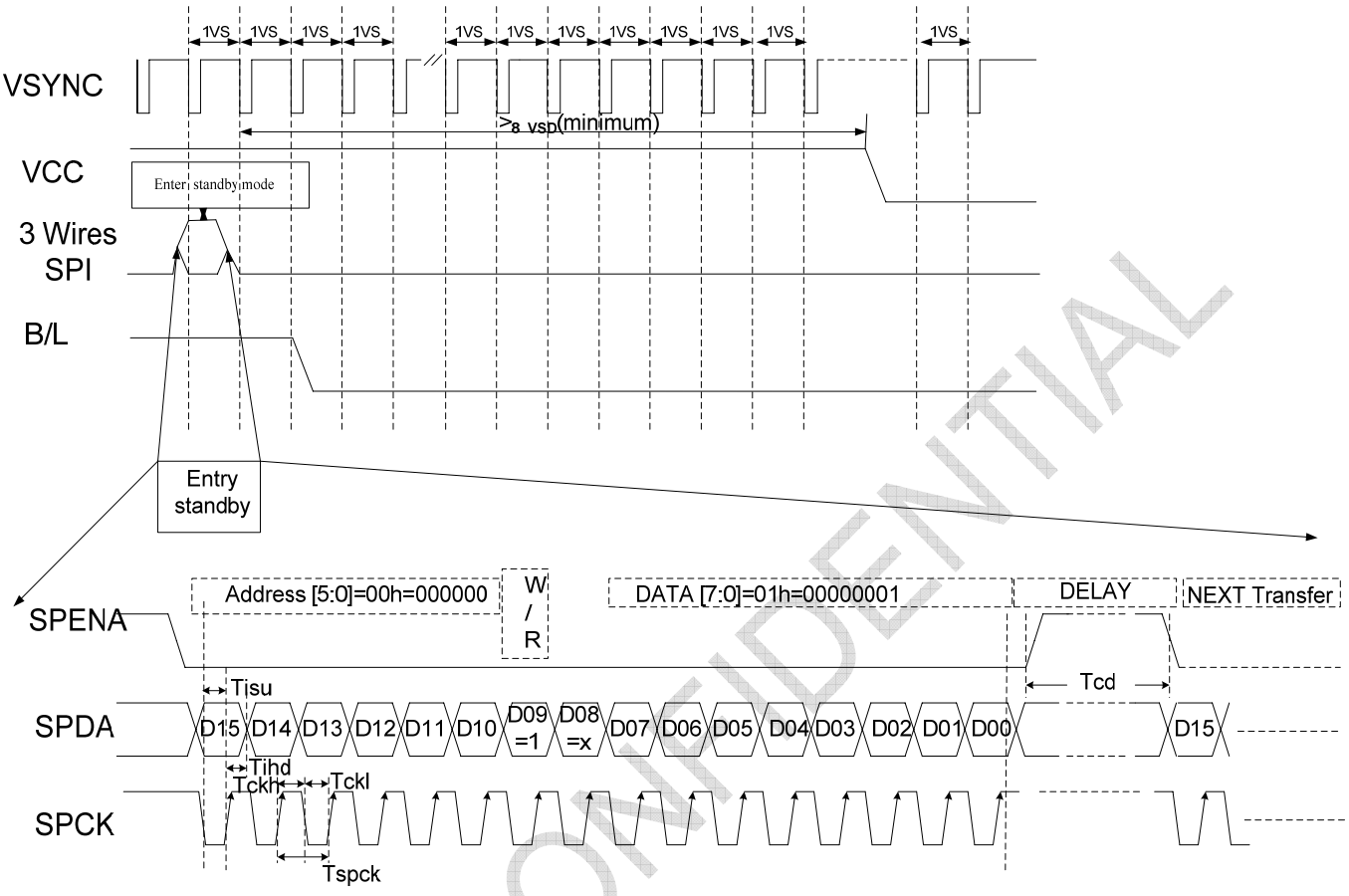

Note

1. 1VS=1VSYNC. Please entry Standby Mode through 3-wire command, detail sequence which enter

   Standby Mode under power off mode presentation as below.

2. Enter to standby mode, you can write data “0x01” to register “R00”, D09=1 for writing data to register. D09=0 for reading data from register.

   Under SPI write mode,D08=X , and ‘X’ means don’t care D08=‘1’ or ‘0’.

Parameter	Symbol	Min	Typ	Max	Unit	Remarks
Serial clock	Tspck	320	-	-	ns	
SPCK pulse duty	Tscdut	40	50	60	%	
Serial data setup time	Tisu	120	-	-	ns	
Serial data hold time	Tihd	120	-	-	ns	
Serial clock high/low	Tssw	120	-	-	ns	Tckh or Tckl
Chip select distinguish	Tcd	1	-	-	us	

6 Optical Characteristics

6.1 Optical Specification

Ta=25℃

Item		Symbol	Condition	Min	Typ.	Max.	Unit	Remark
View Angles		θT	CR≧10	50	60	-	Degree	Note 2
		θB		60	70	-		
		θL		60	70	-		
		θR		60	70	-		
Contrast Ratio		CR	θ=0°	200	350	-		Note1 Note3
Response Time		T_{ON}	25℃	-	25	40	ms	Note1 Note4
		T_{OFF}						
Chromaticity	White	x	Backlight is on	0.260	0.310	0.360		Note5, Note1
		y		0.283	0.333	0.383		
	RED	x		0.574	0.624	0.674		
		y		0.318	0.368	0.418		
	GREEN	x		0.300	0.350	0.400		
		y		0.500	0.550	0.600		
	BLUE	x		0.093	0.143	0.193		
		y		0.069	0.119	0.169		
Uniformity		U		75	80	-	%	Note1 Note6
NTSC				-	50	-	%	Note 5
Luminance		L		240	300	-	cd/m^2	Note1 Note7

Test Conditions:

1. V_F =19.2V, I_F =20mA(LED current), the ambient temperature is 25℃.
2. The test systems refer to Note 1 and Note2.

Note 1: Definition of optical measurement system.

The optical characteristics should be measured in dark room. After 5 minutes operation, the optical properties are measured at the center point of the LCD screen. All input terminals LCD panel must be ground when measuring the center area of the panel.

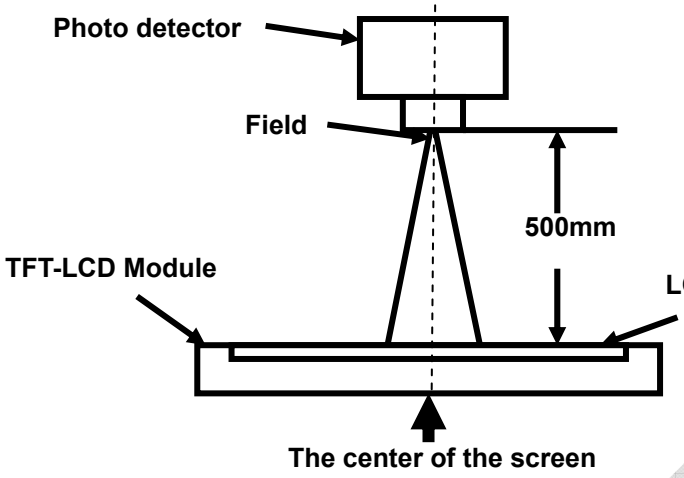

Item	Photo detector	Field
Contrast Ratio	SR-3A	1°
Luminance		
Chromaticity		
Lum Uniformity		
Response Time	BM-7A	2°

Note 2: Definition of viewing angle range and measurement system.

viewing angle is measured at the center point of the LCD by CONOSCOPE(ergo-80)。

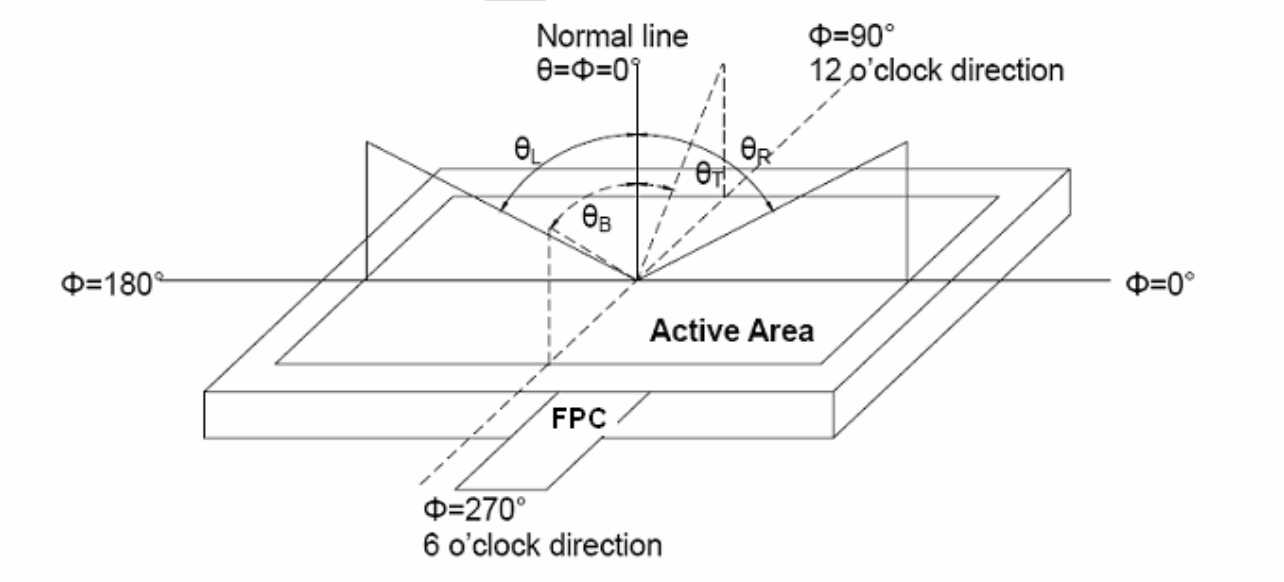

Fig. 1 Definition of viewing angle

Note 3: Definition of contrast ratio

$$\text{Contrast ratio (CR)} = \frac{\text{Luminance measured when LCD is on the "White" state}}{\text{Luminance measured when LCD is on the "Black" state}}$$

“White state “:The state is that the LCD should driven by Vwhite.

“Black state”: The state is that the LCD should driven by Vblack.

Vwhite: To be determined Vblack: To be determined.

Note 4: Definition of Response time

The response time is defined as the LCD optical switching time interval between “White” state and “Black” state. Rise time (TON) is the time between photo detector output intensity changed from 90% to 10%. And fall time (TOFF) is the time between photo detector output intensity changed from 10% to 90%.

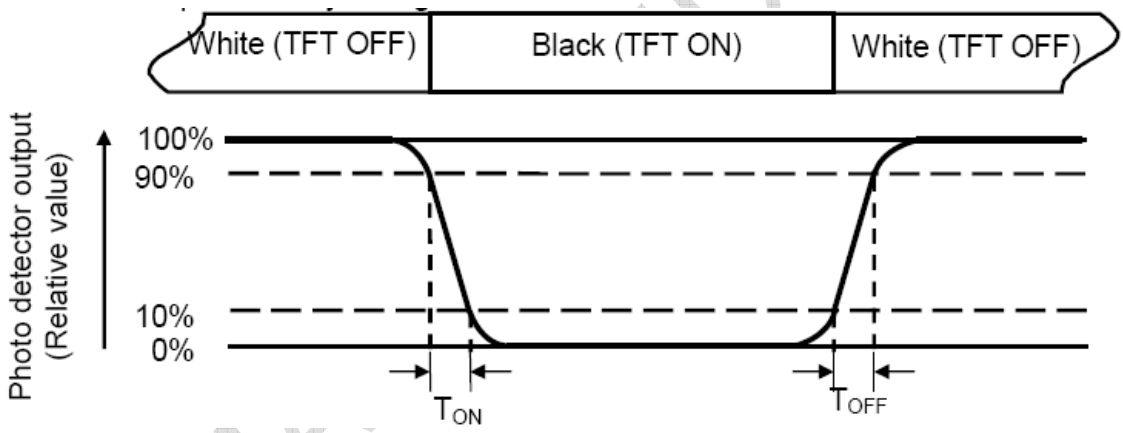

Note 5: Definition of color chromaticity (CIE1931)

Color coordinates measured at center point of LCD.

Note 6: Definition of Luminance Uniformity

Active area is divided into 9 measuring areas (Refer Fig. 2). Every measuring point is placed at the center of each measuring area.

Luminance Uniformity(U) = Lmin/ Lmax

L-------Active area length W----- Active area width

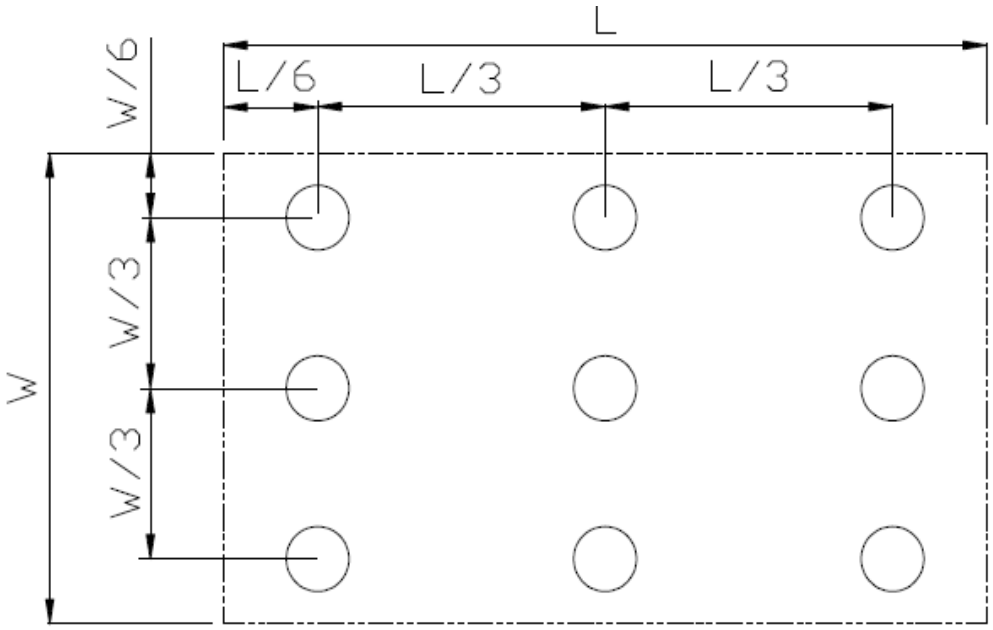

Fig. 2 Definition of uniformity

Lmax: The measured maximum luminance of all measurement position.

Lmin: The measured minimum luminance of all measurement position.

Note 7: Definition of Luminance :

Measure the luminance of white state at center point.

7 Environmental / Reliability Tests

No	Test Item	Condition	Remarks
1	High Temperature Operation	Ts=+60℃,240hrs	Note1 IEC60068-2-2,GB2423.2—89
2	Low Temperature Operation	Ta=-20℃,240hrs	Note 2, IEC60068-2-1 GB2423.1—89
3	High Temperature Storage	Ta=+70℃,240hrs	IEC60068-2-2, GB2423.2—89
4	Low Temperature Storage	Ta=-30℃,240hrs	IEC60068-2-1 GB2423.1—89
5	High Temperature & High Humidity Storage	+60℃,90% RH max,160 hours	IEC60068-2-3, GB/T2423.3—2006
6	Thermal Shock (Non-operation)	-30℃ 30 min~+70℃ 30 min, Change time:5min,30 Cycle.	Start with cold temperature, end with high temperature IEC60068-2-14,GB2423.22—87
7	Electro Static Discharge (Operation)	C=150pF, R=330Ω，5points/panel Air:±8KV,5times;Contact:±4KV,5times; （ Environment:15℃ ～ 35℃,30% ～ 60%,86Kpa～106Kpa）	IEC61000-4-2 GB/T17626.2—1998
8	Vibration (Non-operation)	Frequency range:10~55Hz,Stroke:1.5mm Sweep:10Hz~55Hz~10Hz 2 hours for each direction of X.Y.Z.(package condition)	IEC60068-2-6 GB/T2423.10—1995
9	Shock (Non-operation)	60G 6ms, ± X,± Y,± Z 3times for each direction	IEC60068-2-27 GB/T2423.5—1995
10	Package Drop Test	Height:80 cm,1 corner, 3 edges, 6 surfaces	IEC60068-2-32 GB/T2423.8—1995

Note1: Ts is the temperature of panel's surface.

Note2: Ta is the ambient temperature of sample.

8 Mechanical Drawing

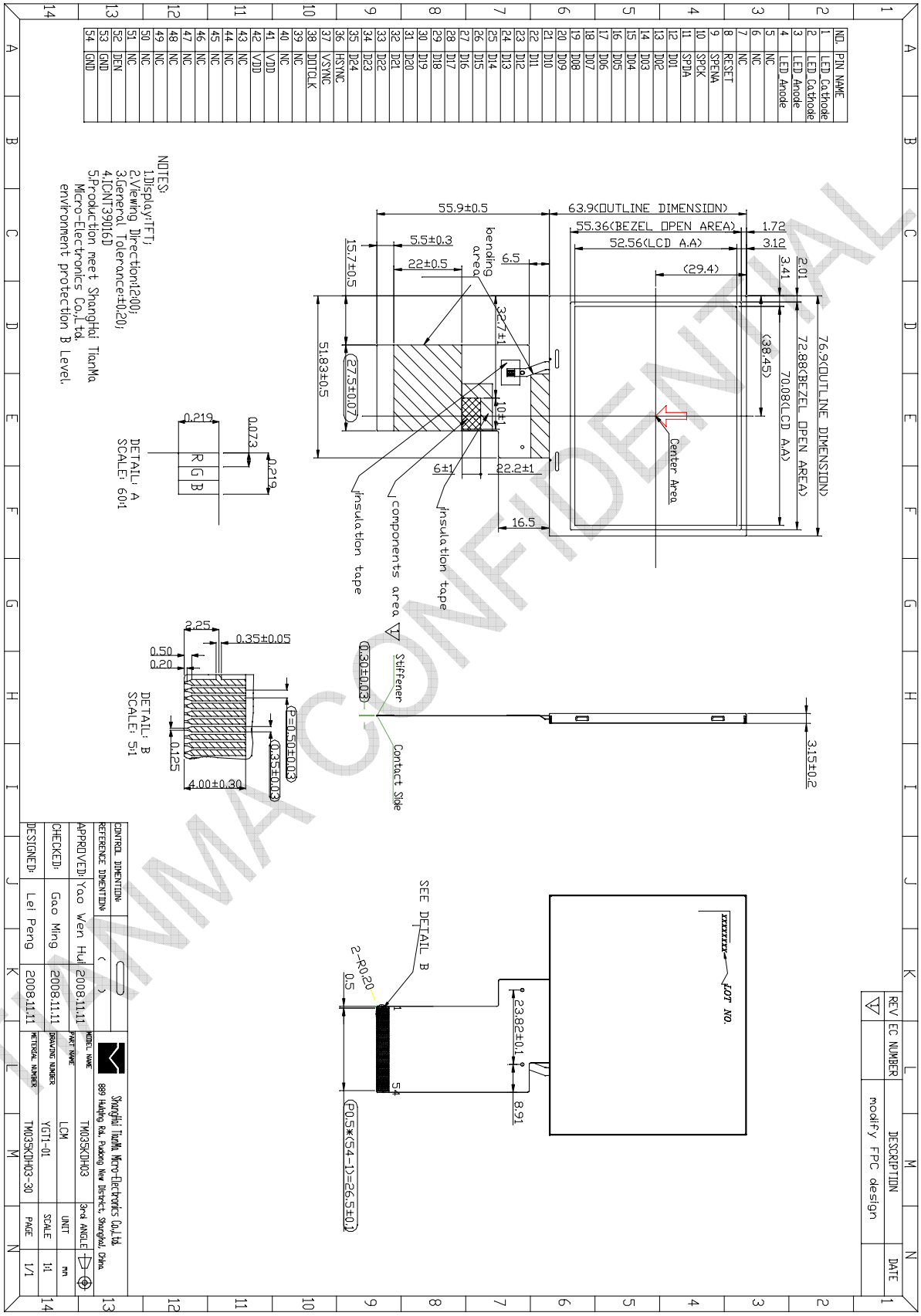

9 Packing drawing

LCM quantity per Partition: 3rows x 28 pcs = 84 pcs
Total quantity in carton: 2 layers x 84 pcs per partition= 168 pc

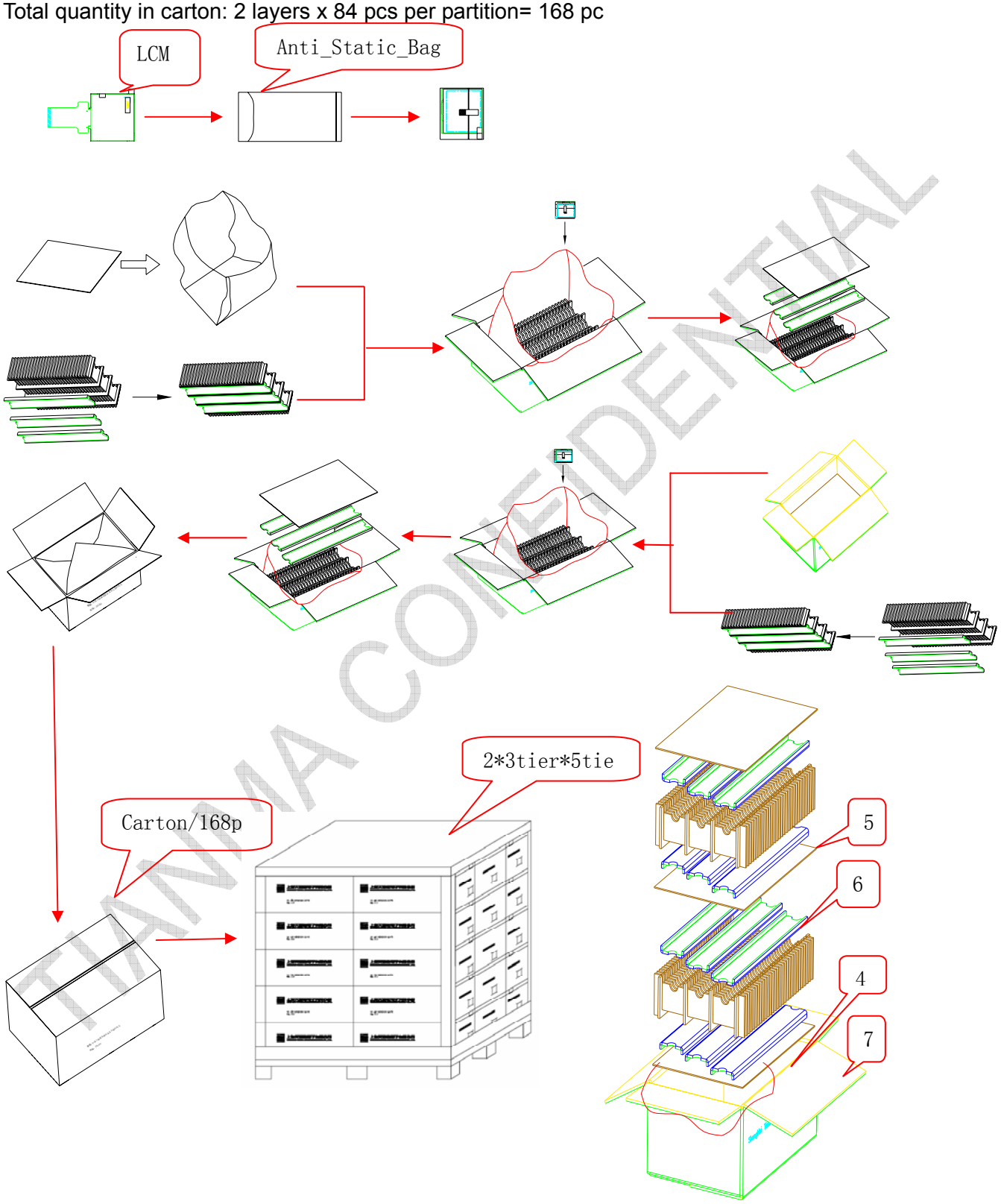

Per carton:

No	Item	Model (Material)	Dimensions(mm)	Unit Weight(Kg)	Quantity	Remark
1	LCM module	TM035KDH03	76.90 x 63.90 x 3.15	0.03	168	
2	Partition_1	Corrugated Paper	513*333*106	0.782	2	
3.	Anti-Static Bag	PE	155*85*0.05	0.003	168	Anti-static
4	Dust-Proof Bag	PE	----------	0.060	1	
5	Partition_2	Corrugated Paper	505*332*4.00	0.095	3	
6	Corrugated Bar	Corrugated Paper	513*117*4	0.032	12	
7	Carton	Corrugated Paper	530*350*250	1.1000	1	
8	Total weight	8.937±5%				

10 Precautions For Use of LCD modules

10.1 Handling Precautions

10.1.1. The display panel is made of glass. Do not subject it to a mechanical shock by dropping it from a high place, etc.

10.1.2. If the display panel is damaged and the liquid crystal substance inside it leaks out, be sure not to get any in your mouth, if the substance comes into contact with your skin or clothes, promptly wash it off using soap and water.

10.1.3. Do not apply excessive force to the display surface or the adjoining areas since this may cause the color tone to vary.

10.1.4. The polarizer covering the display surface of the LCD module is soft and easily scratched. Handle this polarizer carefully.

10.1.5. If the display surface is contaminated, breathe on the surface and gently wipe it with a soft dry cloth. If still not completely clear, moisten cloth with one of the following solvents:

- Isopropyl alcohol
- Ethyl alcohol

Solvents other than those mentioned above may damage the polarizer. Especially, do not use the following:

- Water
- Ketone
- Aromatic solvents

10.1.6. Do not attempt to disassemble the LCD Module.

10.1.7. If the logic circuit power is off, do not apply the input signals.

10.1.8. To prevent destruction of the elements by static electricity, be careful to maintain an optimum work environment.

10.1.8.1. Be sure to ground the body when handling the LCD Modules.

10.1.8.2. Tools required for assembly, such as soldering irons, must be properly ground.

10.1.8.3. To reduce the amount of static electricity generated, do not conduct assembly and other work under dry conditions.

10.1.8.4. The LCD Module is coated with a film to protect the display surface. Be care when peeling off this protective film since static electricity may be generated.

10.2 Storage Precautions

10.2.1. When storing the LCD modules, avoid exposure to direct sunlight or to the light of fluorescent lamps.

10.2.2. The LCD modules should be stored under the storage temperature range. If the LCD modules will be stored for a long time, the recommend condition is:

Temperature : 0℃ ～ 40℃ Relatively humidity: ≤80%

10.2.3. The LCD modules should be stored in the room without acid, alkali and harmful gas.

10.3 Transportation Precautions

The LCD modules should be no falling and violent shocking during transportation, and also should avoid excessive press, water, damp and sunshine.