MODEL NO. : TM070RDH19

ISSUED DATE: 2011-04-29

VERSION : Ver 1.3

■**Preliminary Specification**
□**Final Product Specification**

Customer : Mitac

Approved by	Notes

SHANGHAI AVIC Confirmed :

Prepared by	Checked by	Approved by

This technical specification is subjected to change without notice

Table of Contents

Record of Revision

Rev	Issued Date	Description	Editor
1.0	2011-03-01	Preliminary Specification Release	Xing Nie
1.1	2011-04-14	Change Timing Setting Of TCON	Longping.Deng
1.2	2011-04-18	Add IIS spec	Shihong_Nian
1.3	2011-04-29	Updated the Drawing	Shihong_Nian

1 General Specifications

Feature		Spec
Display Spec.	Size	7 inch
	Resolution	800(RGB) x 480
	Interface	RGB 24 bits with TCON
	Color Depth	16.7M
	Technology Type	a-Si TFT
	Pixel Pitch (mm)	0.0642 (W) x 0.1790(H)
	Pixel Configuration	R.G.B. Vertical Stripe
	Display Mode	TM with Normally White
	Surface Treatment(Up Polarizer)	Anti Glare
	Viewing Direction	12 o'clock
	Gray Scale Inversion Direction	6 o'clock
Mechanical Characteristics	LCM (W x H x D) (mm)	164.9x 100 x 3.35
	Active Area(mm)	154.08 (W) x 85.92 (H)
	With /Without TSP	Without TSP
	Weight (g)	120.5
	LED Numbers	27 LEDs

Note 1: Viewing direction for best image quality is different from TFT definition. There is a 180 degree shift.

Note 2: Requirements on Environmental Protection: QS/0002

Note 3: LCM weight tolerance: +/- 5%

2 Input/Output Terminals

2.1 CN1 of FPC

Pin No.	Symbol	I/O	function	Remarks
1	V_{LED+}	P	Power for LED backlight(anode)	
2	V_{LED+}	P	Power for LED backlight(anode)	
3	V_{LED-}	P	Power for LED backlight(Cathode)	
4	V_{LED-}		Power for LED backlight(Cathode)	
5	GND	P	Power ground	
6	V_{COM}	I	Common voltage	
7	DV_{DD}	P	Power for digital circuit	
8	MODE	I	DE/SYNC mode select	
9	DE	I	DATA INPUT Enable	
10	VS	I	VERTICAL SYNC INPUT	
11	HS	I	Horizontal Sync Input	
12	B7	I	Blue data(MSB)	
13	B6	I	Blue data	
14	B5	I	Blue data	
15	B4		Blue data	
16	B3	I	Blue data	
17	B2	I	Blue data	
18	B1		Blue data	
19	B0	I	Blue data(LSB)	
20	G7	I	Green data(MSB)	
21	G6	I	Green data	
22	G5	I	Green data	
23	G4	I	Green data	
24	G3	I	Green data	
25	G2	I	Green data	
26	G1	I	Green data	
27	G0	I	Green data(LSB)	
28	R7	I	RED data(MSB)	
29	R6	I	RED data	
30	R5	I	RED data	
31	R4	I	RED data	
32	R3	I	RED data	
33	R2	I	RED data	
34	R1	I	RED data	

35	R0	I	RED data(LSB)	
36	GND	P	Power ground	
37	DCLK	I	Sample clock	
38	GND	I	Power ground	
39	L/R	I	Left/right selection	
40	U/D	I	Up/down selection	
41	V_{GH}	P	Gate on voltage	
42	V_{GL}	P	Gate off voltage	
43	AV_{DD}	P	Power for analog circuit	
44	RESET	I	Global reset pin	
45	NC	-	No connection	
46	V_{COM}	P	Common voltage	
47	DITHB	I	Dithering function	
48	GND	P	Power ground	
49	NC	-	No connection	
50	NC	-	No connection	

Note: I/O definition.

I---Input pin, O---Output pin, P--- Power/Ground, N--- No Connection

2.2 U/D L/R Function Description

Scan Control Input		Scanning Direction
U/D	L/R	
GND	VCC	Up to Down, Left to Right
VCC	GND	Down to Up, Right to Left
GND	GND	Up to Down, Right to Left
VCC	VCC	Down to Up, Left to Right

3 Absolute Maximum Ratings

AGND= GND=0V, Ta = 25℃

Item	Symbol	Min	Max	Unit	Remark
Power Voltage	DV_{DD}	-0.5	5.0	V	
	AVDD	-0.5	13.5	V	
	VGH	-0.3	+42	V	
	VGL	VGH-42	+0.3	V	
Backlight Forward Current	I_{LED}	-	25	mA	For each LED
Operating Temperature	T_{OPR}	-20	70	℃	
Storage Temperature	T_{STG}	-30	80	℃	

4 Electrical Characteristics

4.1 Recommended Operating Condition

AGND=GND=0V, Ta = 25℃

Item		Symbol	Min	Typ	Max	Unit	Remark
Logic Supply Voltage		DV_{DD}	2.8	3.3	3.6	V	
Analog Supply Voltage		AVDD	10.2	10.4	10.6	V	
Gate On Voltage		VGH	15.3	16	16.7	V	
Gate Off Voltage		VGL	-7.7	-7	-6.3	V	
Common Electrode Driving Signal		VCOM	3.5	3.7	4.5	V	
Input Level Of Gamma Voltage		V1~V5	-	TBD	-	V	
		V6~V10	-	TBD	-	V	
Input Signal Voltage	Low Level	V_{IL}	0	TBD	0.3*DVDD	V	R0~R7,G0~G7,B0~B7,DE, DCLK,HSD,VSD,MODE, RSTB,STBYB,SHLR,UPDN, VCOM,DITH,V1~V10
	High Level	V_{IH}	0.7*DVDD	TBD	DVDD	V	
Output Signal Voltage	Low Level	V_{OL}	-	TBD	GND+0.4	V	
	High Level	V_{OH}	DVDD-0.4	TBD	-	V	

Note: The value is for design stage only.

4.2 Recommended Driving Condition for Backlight

Ta=25℃

Item	Symbol	Min	Typ	Max	Unit	Remark
Forward Current	I_F	-	180	225	mA	27 LEDs (3 LED Serial, 9 LED Parallel)
Forward Voltage	V_F	-	9.6	-	V	
Backlight Power Consumption	W_{BL}	-	1.728	-	W	
Operating Life Time	--	10000	（20000）	--	hrs	

Note1: The LED driving condition is defined for each LED module (3 LED Serial, 9 LED Parallel).For each LED: I_F (1/9) =20mA, V_F (1/3) =3.2V.

Note2: Under LCM operating, the stable forward current should be inputted. And forward voltage is for reference only.

Note3: I_F is defined for one channel LED.Optical performance should be evaluated at Ta=25℃ only If LED is driven by high current, high ambient temperature & humidity condition. The life time of LED will be reduced.Operating life means brightness goes down to 50% initial brightness. Typical operating life time is estimated data.

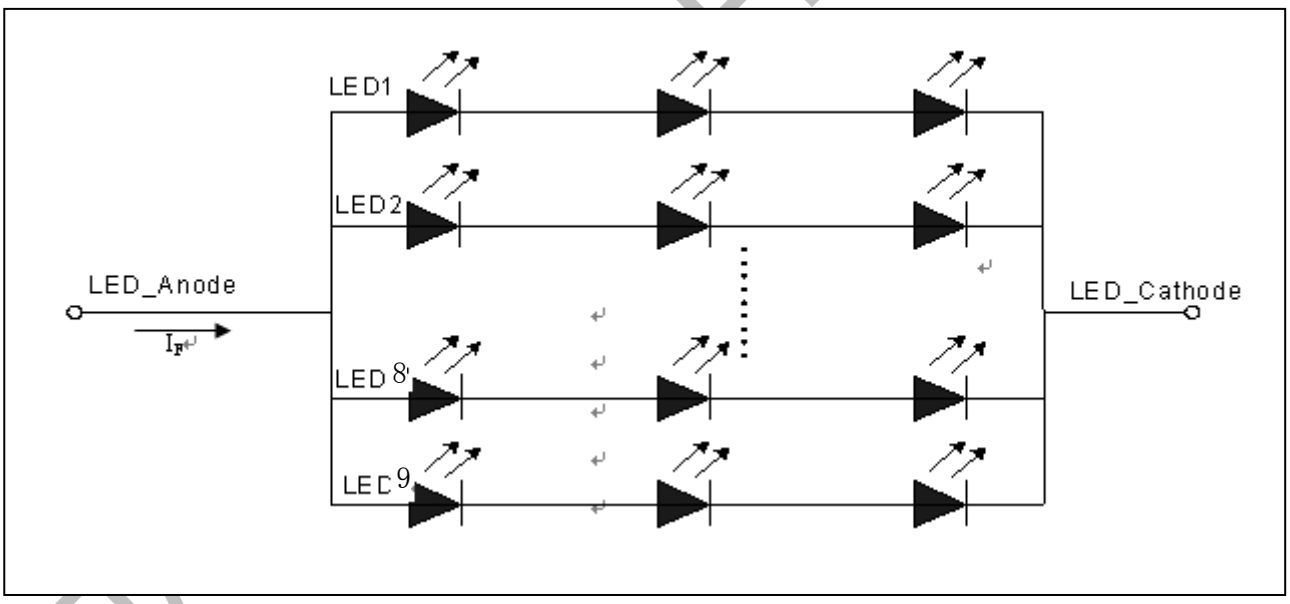

Note4: The LED driving condition is defined for each LED module.

4.3 Power Consumption

AGND=GND=0V, Ta = 25℃

Item	Symbol	Condition	Min	Typ	Max	Unit	Remark
Digital Supply Current	I_{VCC}	VCC=3.3V	-	3.22	8.70	mA	
Analog Supply Current	I_{AVDD}	AVDD=10.4V	-	15.69	23.01	mA	
Gate On Current	I_{VGH}	VGH=16V	-	0.20	0.22	mA	
Gate Off Current	I_{VGL}	VGL=-7.0V	-	0.20	0.22	mA	
Power Consumption	Panel&Gamma		-	TBD	-	W	
	Backlight		-	1.728	-	W	
	Total		-	TBD	-	W	

4.4 Block Diagram

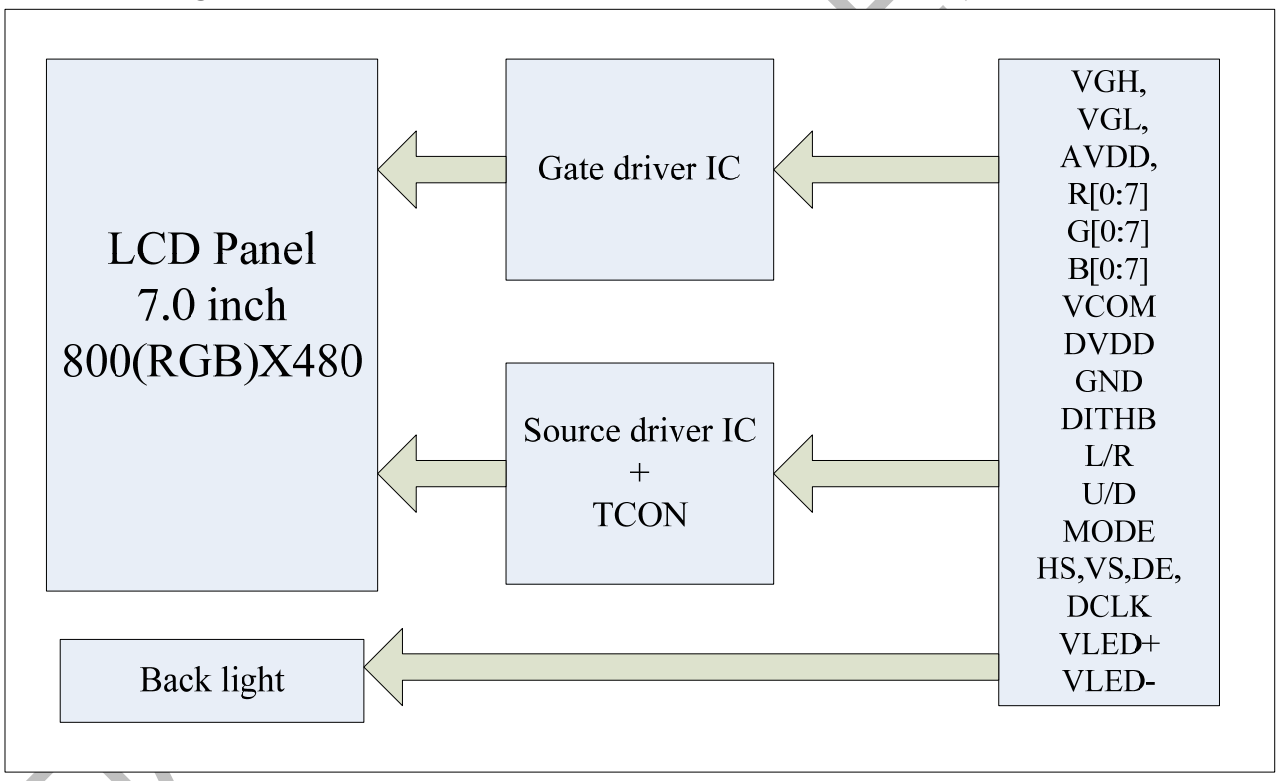

5 Timing Chart

5.1 TFT-LCD Input Timing

VCC=3.3V, AVDD=12.5V, AGND=GND=0V, Ta=25℃

Parameter	Symbol	Min	Typ	Max	Unit	Conditions
DCLK Frequency	Fclk	-	30.0	40.0	MHz	
DCLK Cycle Time	Tcph	25	33.3	-	ns	
DCLK Pulse Width	Tcw	40%	50%	60%	Tcph	
VSD Setup Time	Tvst	8	-	-	ns	
VSD Hold Time	Tvhd	8	-	-	ns	
HSD Setup Time	Thst	8	-	-	ns	
HSD Hold Time	Thhd	8	-	-	ns	
Data Setup Time	Tdsu	8	-	-	ns	Data to DCLK
Data Hold Time	Tdhd	8	-	-	ns	Data to DCLK
DE Setup Time	Tesu	8	-	-	ns	
DE Hold Time	Tehd	8	-	-	ns	

Input Clock and Data timing Diagram:

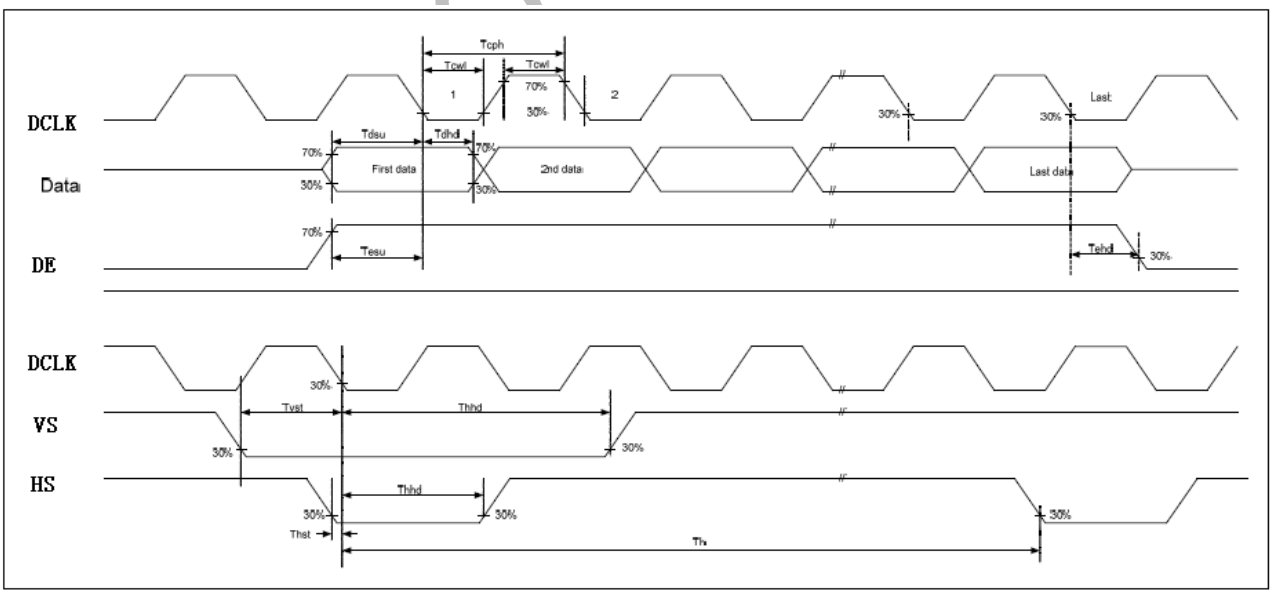

5.2 Recommended Timing Setting Of TCON

TCON (Embedded In Source IC) Input Timing (DCLK, HSD, VSD, DE)

VCC=3.3V, AVDD=12.5V, AGND=GND=0V, Ta=25℃

Parameter	Symbol	Min	Typ	Max	Unit	Remark
DCLK	F_{clk}	-	30	50	MHZ	
	t_{clk}	20	33.3	-	ns	
HSD	t_h	862	1056	1200	t_{clk}	
	t_{hd}	800	800	800	t_{clk}	
	t_{hpw}	1	-	40	t_{clk}	
	t_{hb}	46	46	46	t_{clk}	
	t_{hfp}	16	210	354	t_{clk}	
VSD	t_v	510	525	650	t_h	
	t_{vd}	480	480	480	t_h	
	t_{vpw}	1	3	20	t_h	
	t_{vb}	23	23	23	t_h	
	t_{vfp}	7	22	147	t_h	

Note: DE timing refer to HSD, VSD input timing.

Vertical input timing Diagram:

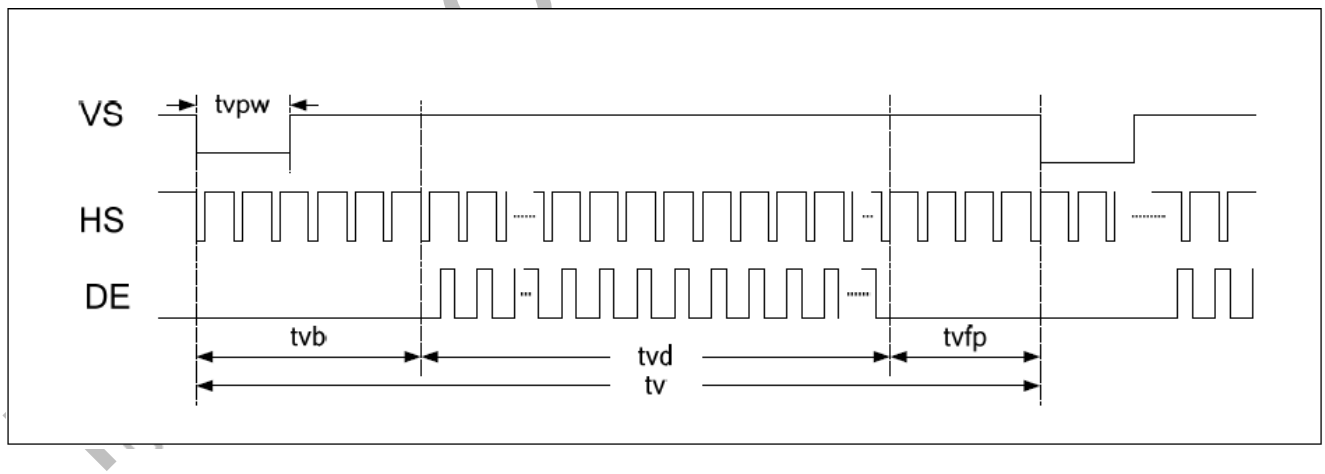

Horizontal input timing Diagram:

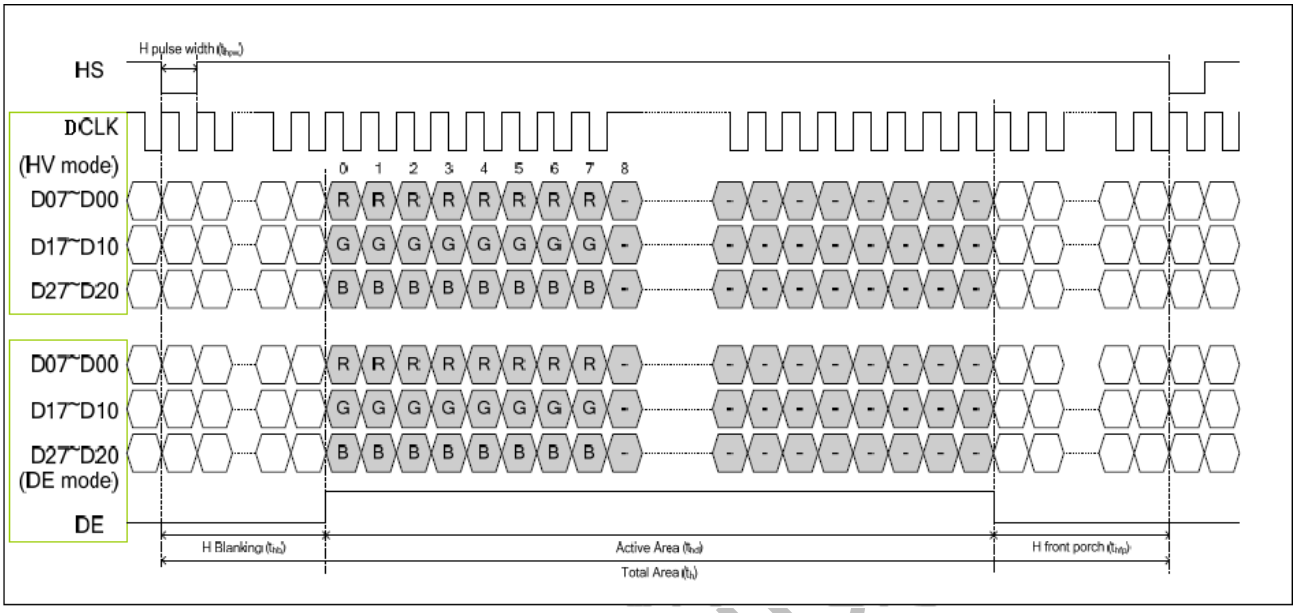

5.3 POWER ON/OFF SEQUENCE

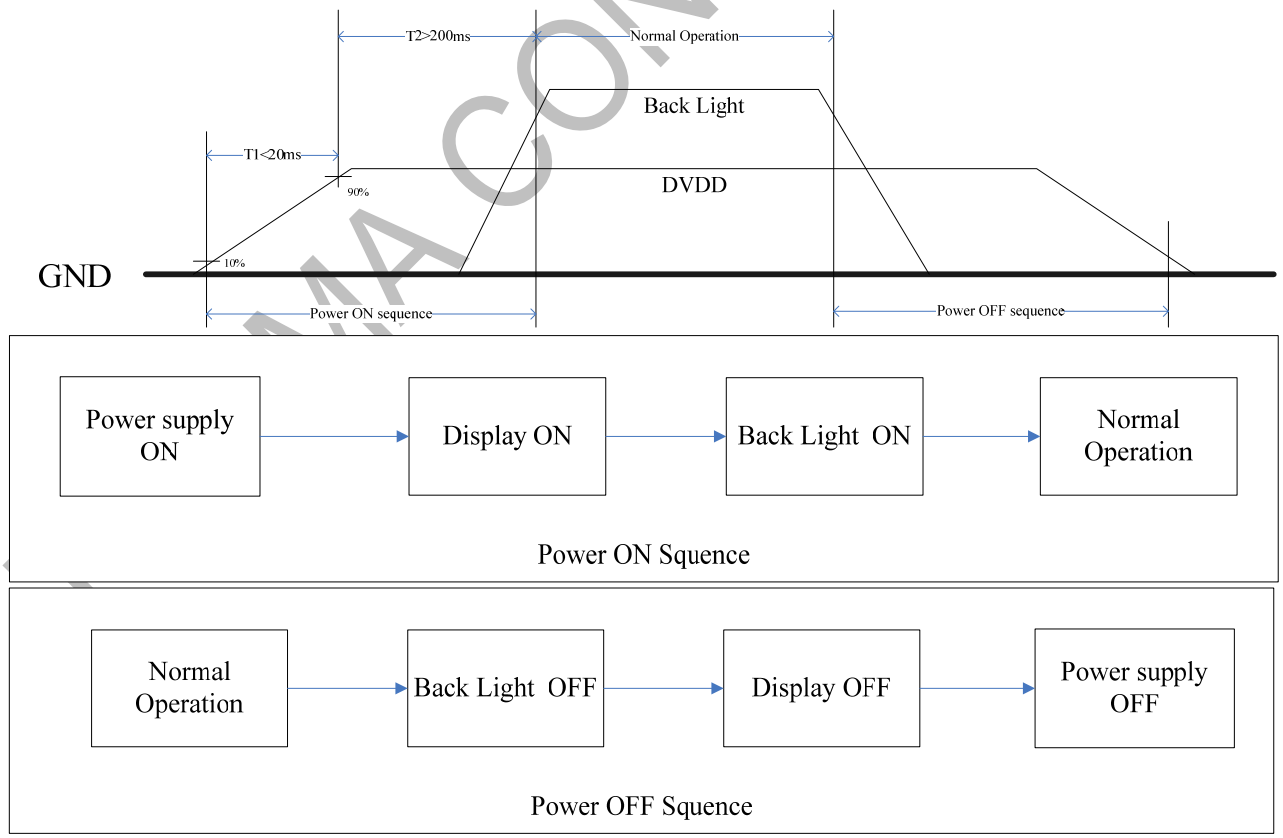

6 Optical Characteristics

Ta=25℃

Item		Symbol	Condition	Min	Typ	Max	Unit	Remark
View Angles		θT	CR≧10	50	60	-	Degree	Note 2
		θB		60	70	-		
		θL		60	70	-		
		θR		60	70	-		
Contrast Ratio		CR	θ=0°	400	500	-		Note1 Note3
Response Time		T_{ON}	25℃	-	25	-	ms	Note1 Note4
		T_{OFF}						
Chromaticity	White	x	Backlight is on	(0.260)	0.310	(0.360)		Note1 Note5
		y		(0.280)	0.335	(0.380)		
	Red	x		-	TBD	-		
		y		-	TBD	-		
	Green	x		-	TBD	-		
		y		-	TBD	-		
	Blue	x		-	TBD	-		
		y		-	TBD	-		
Uniformity		U		-	75	-	%	Note1 Note6
NTSC				-	50	-	%	Note 5
Luminance		L		200	250	-	cd/m^2	Note1 Note7

Test Conditions:

1. I_F= 20 mA, V_F=9.6 V and the ambient temperature is 25℃.
2. The test systems refer to Note 1 and Note 2.

Note 1: Definition of optical measurement system.

The optical characteristics should be measured in dark room. After 5 Minutes operation, the optical properties are measured at the center point of the LCD screen. All input terminals LCD panel must be ground when measuring the center area of the panel.

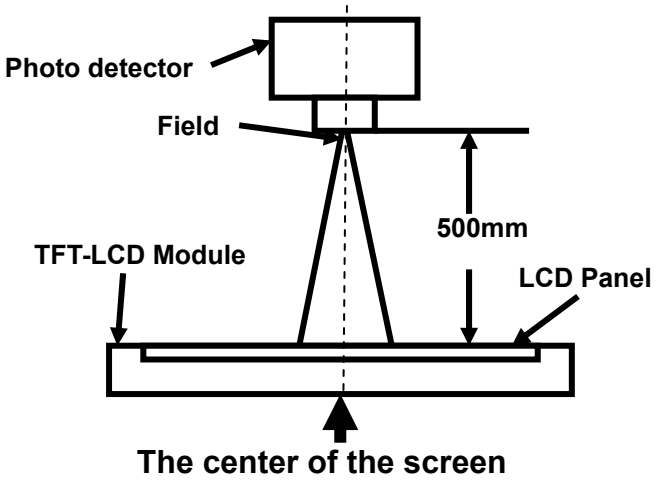

Item	Photo detector	Field
Contrast Ratio	SR-3A	1°
Luminance		
Chromaticity		
Lum Uniformity		
Response Time	BM-7A	2°

Note 2: Definition of viewing angle range and measurement system.

viewing angle is measured at the center point of the LCD by CONOSCOPE(ergo-80)。

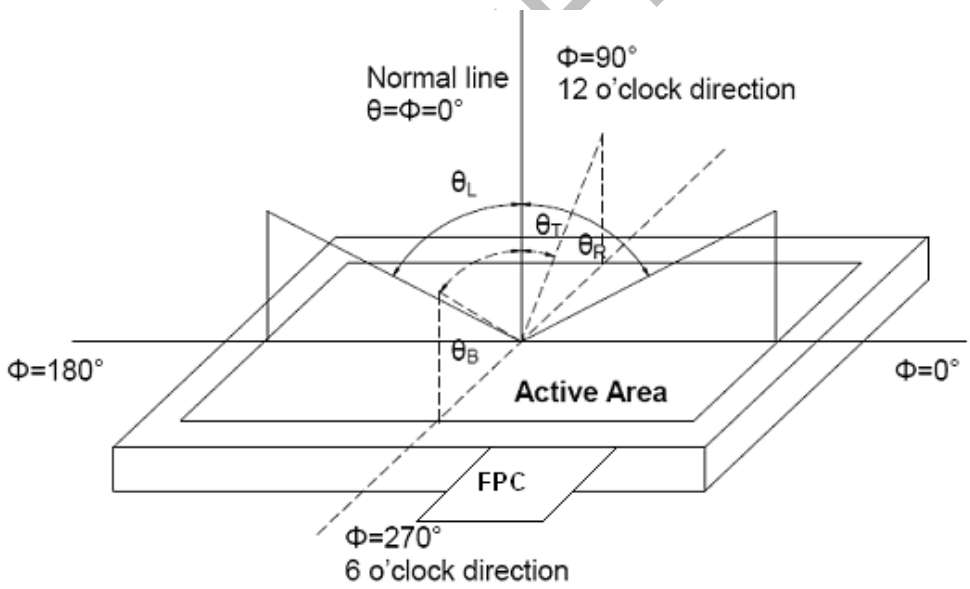

Note 3: Definition of contrast ratio

$$\text{Contrast ratio (CR)} = \frac{\text{Luminance measured when LCD is on the "White" state}}{\text{Luminance measured when LCD is on the "Black" state}}$$

"White state ": The state is that the LCD should drive by Vwhite.

"Black state": The state is that the LCD should drive by Vblack.

Vwhite: To be determined Vblack: To be determined.

Note 4: Definition of Response time

The response time is defined as the LCD optical switching time interval between "White" state and

"Black" state. Rise time (T_{ON}) is the time between photo detector output intensity changed from 90% to 10%. And fall time (T_{OFF}) is the time between photo detector output intensity changed from 10% to 90%.

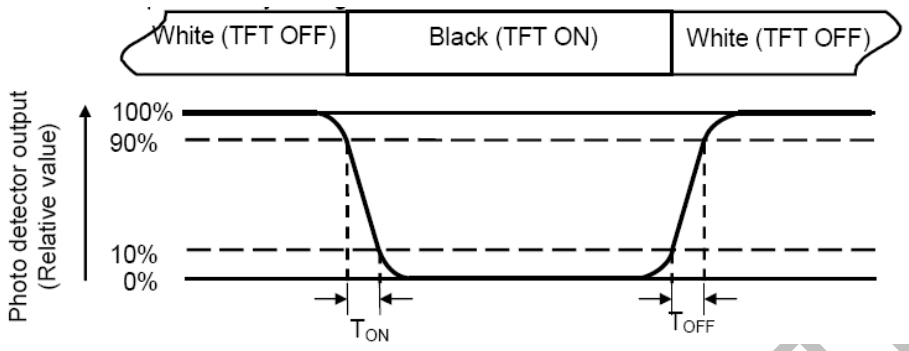

Note 5: Definition of color chromaticity (CIE1931)

Color coordinates measured at center point of LCD.

Note 6: Definition of Luminance Uniformity

Active area is divided into 9 measuring areas (Refer Fig. 2). Every measuring point is placed at the center of each measuring area.

Luminance Uniformity (U) = Lmin/ Lmax

L-------Active area length W----- Active area width

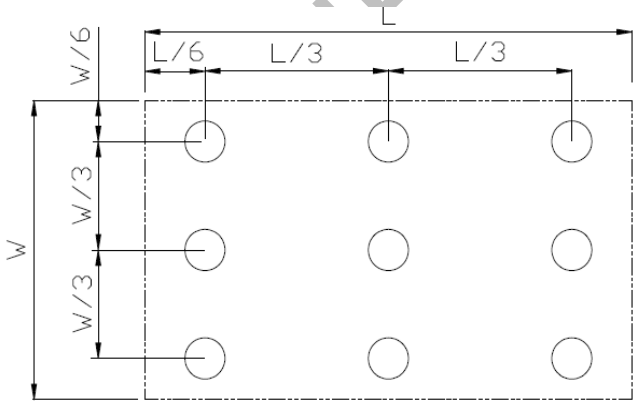

Lmax: The measured Maximum luminance of all measurement position.

Lmin: The measured Minimum luminance of all measurement position.

Note 7: Definition of Luminance:

Measure the luminance of white state at center point.

7 Environmental / Reliability Test

No	Test Item	Condition	Remarks
1	High Temperature Operation	Ts = +70℃, 240 hours	IEC60068-2-1 GB2423.2
2	Low Temperature Operation	Ta = -20℃, 240 hours	IEC60068-2-1 GB2423.1
3	High Temperature Storage	Ta = +80℃, 240 hours	IEC60068-2-1 GB2423.2
4	Low Temperature Storage	Ta = -30℃, 240 hours	IEC60068-2-1 GB2423.1
5	Storage at High Temperature and Humidity	Ta = +60℃, 90% RH max,240hours	IEC60068-2-78 GB/T2423.3
6	Thermal Shock (non-operation)	-30℃ 30 min~+80℃ 30 min, Change time:5min, 100 Cycle	Start with cold temperature, End with high temperature, IEC60068-2-14, GB2423.22
7	ESD	C=150pF,R=330Ω,5point/panel Air:±8Kv,5times; Contact:±4Kv,5times (Environment:15℃~35℃, 30%~60%.86Kpa~106Kpa)	IEC61000-4-2 GB/T17626.2
8	Vibration Test	Frequency range:10~55Hz Stroke:1.5mm Sweep:10Hz~55Hz~10Hz 2 hours for each direction of X.Y.Z. (6 hours for total)	IEC60068-2-6 GB/T2423.10
9	Mechanical Shock (Non Op)	Half Sine Wave 100G 6ms, ±X,±Y,±Z 3times for each direction	IEC60068-2-27 GB/T2423.5
10	Package Drop Test	Height:60cm, 1corner,3edges,6surfaces	IEC60068-2-32 GB/T2423.8

Note1: Ts is the temperature of panel's surface.

Note2: Ta is the ambient temperature of samples.

8 Mechanical Drawing

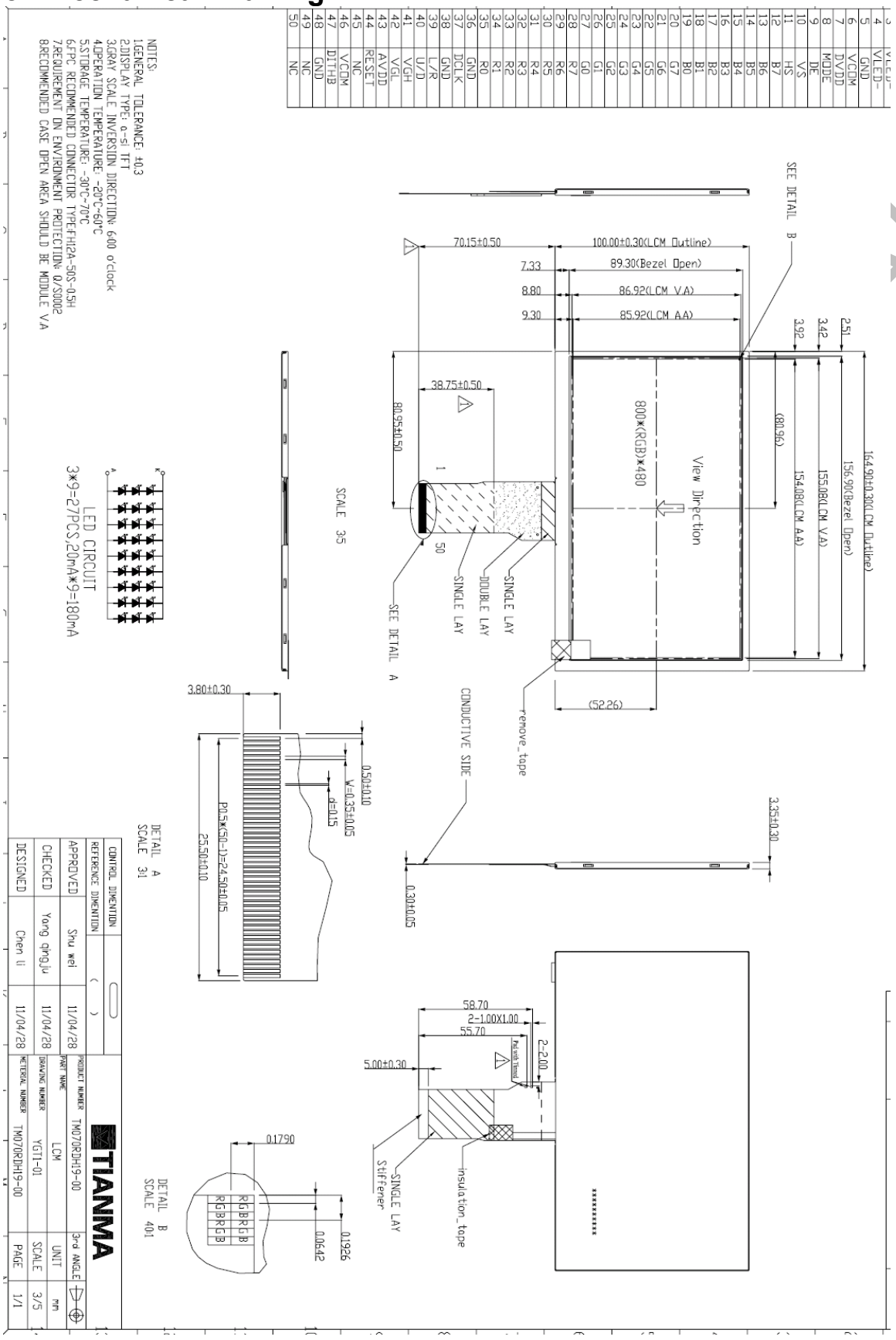

9 Packing drawing

No	Item	Model (Material)	Dimensions(mm)	Unit Weight(Kg)	Quantity	Remark
1	LCM module	TM070RDH19	164.90x100.00x3.35	120.5	50	
2	Partition_1	Corrugated Paper	513x333x215	2.0	1	
3.	Anti-Static Bag	PE	200x175x0.05	0.01	50	Anti-static
4	Dust-Proof Bag	PE	700x545	0.0600	1	
5	Partition_2	Corrugated Paper	505x332	0.1	2	
6	Corrugated Bar	Corrugated Paper	513x148	0.06	4	
7	Beauty-grain	Tape	30x10	TBD	50	
8	Dessicant	Dessicant	45x35	0.002	8	
9	Carton	Corrugated Paper	530x350x250	1.1000	1	
10	Total weight	TBD±5%				

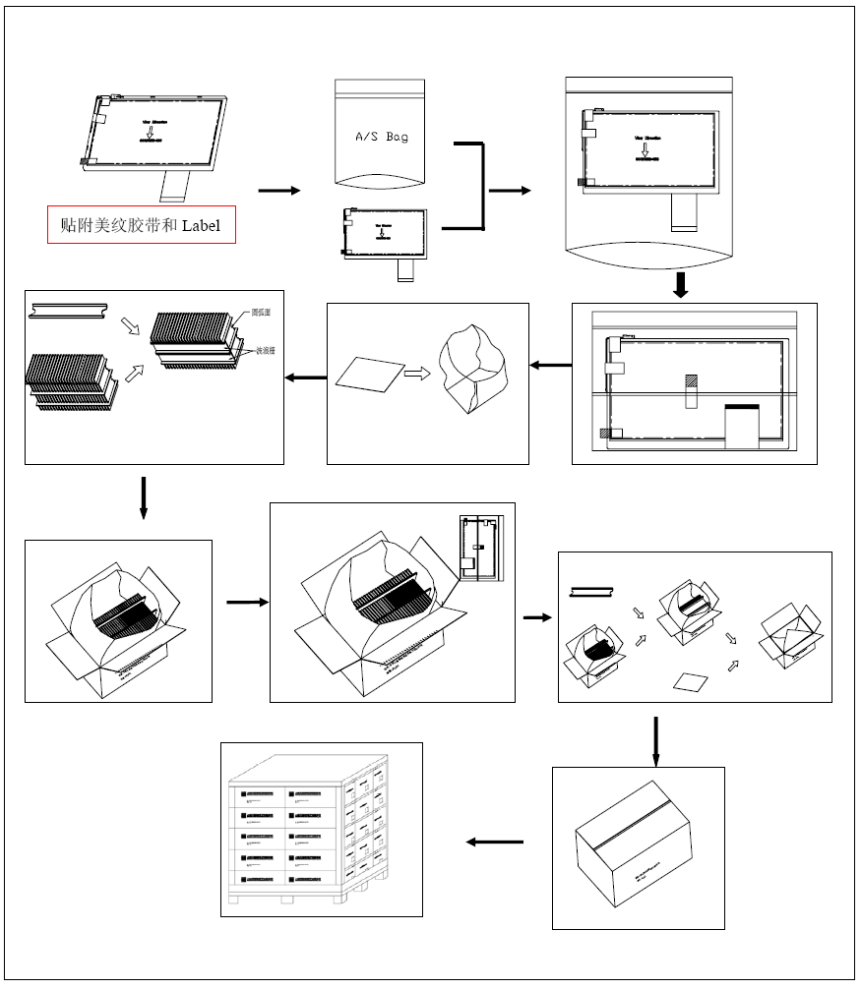

10 TFT- LCD Module Incoming Inspection Standard

10.1 Scope

The incoming inspection standards shall be applied to TFT-LCD Modules (hereinafter called "Modules") that supplied by Shanghai Tianma Micro-Electronics Corporation.

10.2 Incoming Inspection

The customer shall inspect the modules within twenty calendar days of the delivery date（the “inspection period）at its own cost. The result of the inspection（acceptance or rejection）shall be recorded in writing, and a copy of this writing will be promptly sent to the seller, If the results of the inspecting from buyer does not send to the seller within twenty calendar days of the delivery date. The modules shall be regards as acceptance.

Should the customer fail to notify the seller within the inspection period, the buyer’s right to reject the modules. Shall be lapsed and the modules shall be deemed to have been accepted by the buyer.

10.3 Inspection Sampling Method

Lot size: Quantity per shipment lot per model

Sampling type: Normal inspection, Single sampling

Inspection level: II

Sampling table: MIL-STD-105D

Acceptable quality level （AQL）

Major defect: AQL=0.65

Minor defect: AQL=1.00

10.4 Inspection Conditions

12.4.1 ambient conditions:

a. Temperature: Room temperature 25±5℃

b. Humidity: (60±10) ％RH

c. Illumination: Single fluorescent lamp non-directive (1000 to 1200 Lux)

12.4.2 The viewing distance between the LCD and the inspector’s eyes shall be at least 30±5㎝.

12.4.3 Viewing Angle: U/D: 45º/45º, L/R: 45º/45º

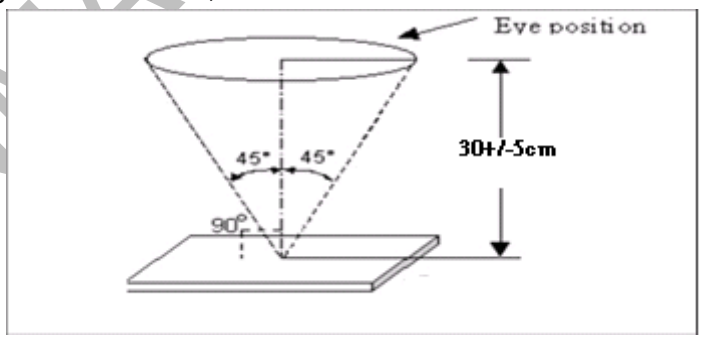

10.5 Inspection Criteria

Defects are classified as major defects and minor defects according to the degree of defectiveness defined herein.

Major defect

Item	Inspection Standard
All Functional Defects	1) No display 2) Display abnormally 3) Short circuit 4) line defect
Missing	Missing function component
Crack	Glass Crack

Minor defect

No	Item	Inspection Standard	
1	**Spot Defect (Including black spot and white spot)**	$\varphi = (x+y)/2$ For black/white spot is defined 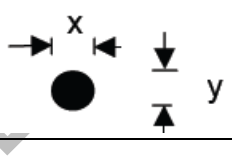	
		Size φ(mm)	Acceptable Quantity
		φ≤0.20	Ignore
		0.20<φ≤0.5	3
		0.5<φ	Not allowed
2	**Line Defect (Including black line, white line and scratch)**	Define: 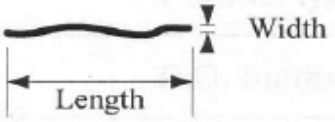	
		Width(mm) Length(mm)	Acceptable Quantity
		W≤0.02	Ignore
		0.02W≤0.05, L≤5.0	4
		0.05<W or L>5.0	Not allowed
3	**Polarizer Dent/Bubble**	Sizeφ(mm)	Acceptable Quantity
		φ≤0.25	Ignore
		0.25＜Φ≤0.5	3
		0.5<φ	0

<table>
<tr><td rowspan="6">4</td><td rowspan="6">Electrical Dot Defect</td><td colspan="4">Bright and black dot define:
  and 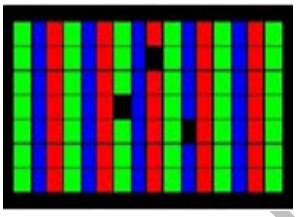 </td></tr>
<tr><td colspan="4">Inspection pattern: Full white、Full black、Red、green and blue screens</td></tr>
<tr><td rowspan="2">Item</td><td colspan="3">Acceptable Quantity</td></tr>
<tr><td>I</td><td>O</td><td>Total</td></tr>
<tr><td>Black dot defect</td><td>2</td><td>3</td><td>4</td></tr>
<tr><td>Bright dot defect</td><td>0</td><td>2</td><td>2</td></tr>
<tr><td>Total Dot</td><td>2</td><td>4</td><td>5</td></tr>
</table>

Note1: Dot defect is defined as the defective area of the dot area is larger than 50% of the dot area.

Note2: The distance between two bright dot defects (red, green, blue, and white) should be larger than 10mm.

Note3: The distance between black dot defects or black and bright dot defects should be more than 5mm apart.

Note4: The definitions of the inner display area and outer display area

I: Inner display area O: Outer display area

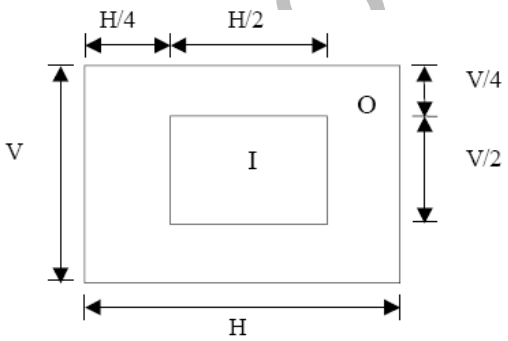

Note5: Polarizer bubble is defined as the bubble appears on active display area. The defect of polarizer bubble shall be ignored if the polarizer bubble appears on the outside of active display area.

10.6 Mechanics specification

As for the outside dimension, weight of the modules, please refer to product specification for more details

11 Precautions for Use of LCD Modules

11.1 Handling Precautions

10.1.1 The display panel is made of glass. Do not subject it to a mechanical shock by dropping it from a high place, etc.

10.1.2 If the display panel is damaged and the liquid crystal substance inside it leaks out, be sure not to get any in your mouth, if the substance comes into contact with your skin or clothes, promptly wash it off using soap and water.

10.1.3 Do not apply excessive force to the display surface or the adjoining areas since this may cause the color tone to vary.

10.1.4 The polarizer covering the display surface of the LCD module is soft and easily scratched. Handle this polarizer carefully.

10.1.5 If the display surface is contaMinated, breathe on the surface and gently wipe it with a soft dry cloth. If still not completely clear, moisten cloth with one of the following solvents:

- Isopropyl alcohol
- Ethyl alcohol

Solvents other than those mentioned above may damage the polarizer. Especially, do not use the following:

- Water
- Ketone
- Aromatic solvents

10.1.6 Do not attempt to disassemble the LCD Module.

10.1.7 If the logic circuit power is off, do not apply the input signals.

10.1.8 To prevent destruction of the elements by static electricity, be careful to maintain an optimum work environment.

10.1.8.1 Be sure to ground the body when handling the LCD Modules.

10.1.8.2 Tools required for assembly, such as soldering irons, must be properly ground.

10.1.8.3 To reduce the amount of static electricity generated, do not conduct assembly and other work under dry conditions.

10.1.8.4 The LCD Module is coated with a film to protect the display surface. Be care when peeling off this protective film since static electricity may be generated.

11.2 Storage precautions

10.2.1 When storing the LCD modules, avoid exposure to direct sunlight or to the light of fluorescent lamps.

10.2.2 The LCD modules should be stored under the storage temperature range. If the LCD modules will be stored for a long time, the recommend condition is:

Temperature : 0℃ ～ 40℃ Relatively humidity: ≤80%

10.2.3 The LCD modules should be stored in the room without acid, alkali and harmful gas.

11.3 Transportation Precautions

10.3.1 The LCD modules should be no falling and violent shocking during transportation, and also should avoid excessive press, water, damp and sunshine.