# REFERENCE

Customer:

Attention:

Your Ref. No:

Your Part No:

No.

Date: JUN., 12, '96

ISSUED
JUL. 28. 1997
ENGINEERING DEPT.

# SPECIFICATIONS

ALPS' : Hand Writing Device

MODEL: LRHDD101XA

Spec. No. : LRHDD101XA-1

Sample No:

RECEUPT STATUS

RECEIVED

By. Date

Signature

Name.

Title

ALPS ELECTRIC CO., LTD.

HEADOFFICE
1-7, YUKIGAYA-OHTSUKA-CHO,
OHTA-KU, TOKYO 145 JAPAN

DSG'D F. Sogawa

APP'D Y. Fujiwara
ENG. DEPT. DIVISION

Sales

| CLASS NO. | TITLE SPECIFICATION | |
|---|---|---|
| | | |

# CONTENTS


1. Scope

2. Display contents

3. Mechanical specifications

4. Maximum ratings

5. Electro-optical specifications

6. Electrical specifications

7. Endurance performance

8. Reliability

9. EL appearance

10. Packing specifications

11. Drawings


| | | | |
|---|---|---|---|
| ALPS ELECTRIC CO., | | | |
| APPD. Jan 16, '97 | CHKD Jan 16, '97 | DSGD Jan. 15, '97 | LRHDD101XA-1 |

| CLASS NO. | TITLE | SPECIFICATION |
|---|---|---|
| | | |

1.Scope

This specification is applied to HWD or Hand Writing Device, consisted with LIQUID CRYSTAL DISPLAY (1/240 Duty) and resistive type transparency TABLET.

2. Display contents

| Item | Specification | Unit | |
|---|---|---|---|
| Display Format | Compare with product drawing | — | |
| Dot Pitch | Compare with product drawing | — | |
| Dot Size | Compare with product drawing | — | |
| Display Mode | STN, Transreflective/Positive type | — | |
| Background Color | WHITE | — | |
| Tablet transparency | Min 80% | — | Note1 |

Note1 Visible radiation, standard light source C JIS(Z8720).

3. Mechanical specification

| Item | Specification | Unit |
|---|---|---|
| Outline dimension | Compare with product drawing | — |
| Viewing area | Compare with product drawing | — |
| Input load | 0.245±0.147N (25±15gf) Note 1 | — |
| Weight | 95 | g |

Note 1 Push the tablet vertically with the pen(pen top R0.8,material polyacetal) and change it's load.
Measure the load which the contact resistance is 2KΩ or less.

| | | | |
|---|---|---|---|
| ALPS ELECTRIC CO., | | | |
| APPD. Jun 16.'97 | CHKD Jun 16.'97 | DSGD Jun. 15.'97 | LRHDD101XA-1 |

4. Maximum ratings

| Item | Symbol | Min. | Max. | Unit | Note |
|---|---|---|---|---|---|
| Source voltage | VDD-VSS | -0.3 | 7 | V | - |
| Input voltage of signal | FRAME, DF, LOAD CP, D0～D3 | -0.3 | VDD+0.3 | V | - |
| Source voltage for tablet | — | — | 7.0 | V | Note2 |
| Operating temperature | Ta | -10 | 55 | ℃ | - |
| Storage temperature | Tstg | -20 | 60 | ℃ | - |
| Humidity | | — | 90 | %RH | Note1 |

Note1:Ta≦40℃ No dewdrops

Note2:Endurance DC25V, 1minute

5. Electro-optical specifications

Value in follow list is directly supplied to LCD cell.

Measure equipment ; LCD-7000(OHTSUKA ELECTRONICS CO., LTD.)

| No. | Item | Symbol | Unit | Temp. (℃) | Min. | Typ. | Max. | Note |
|---|---|---|---|---|---|---|---|---|
| 1 | Operating voltage | VEE | V | 0 | — | 23.5 | — | ※1 |
| | | | | 25 | — | 21.5 | — | |
| | | | | 40 | — | 20.0 | — | |
| 2 | Response rise time | tr | msec | 0 | — | 1200 | — | Note1 |
| | | | | 25 | — | 290 | — | |
| | Response fall time | tf | msec | 0 | — | 550 | — | |
| | | | | 25 | — | 120 | — | |
| 3 | Frame frequency | fF | Hz | — | 65 | 70 | 85 | Note1 |
| 4 | Recommendable viewing angle | θo | degree | — | — | 90 | — | Note2 |
| 5 | Viewing angle | | | — | — | — | — | K≧2 |
| | front-rear direction | θ | degree | — | θL=30 | — | — | Note2 |
| | right-left direction | φ | degree | — | — | — | ±30 | Note2 |
| 6 | Contrast ratio | K | — | 25 | — | 4 | — | Note3 |

※1)Voltage range adjustable best contrast from θ0 view

| CLASS NO. | TITLE | SPECIFICATION |
|---|---|---|

Note1: Definition of response time and measuring condition

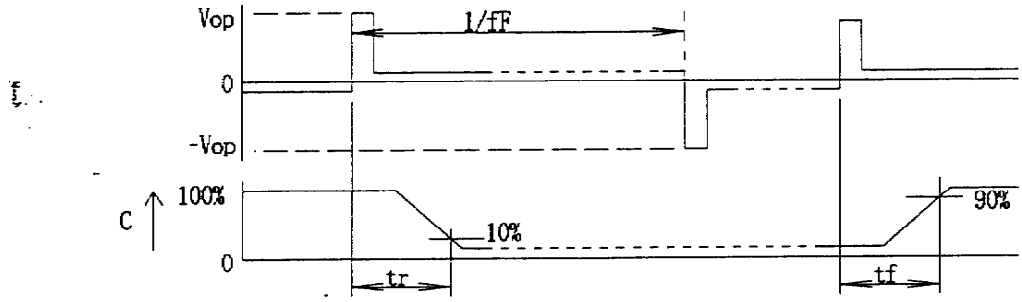


Measurement condition 1) Temperature 25℃

2) Frame frequency fF=70Hz

3) Viewing angle $\theta$ =90°

※In case of Positive type:C=Brightness

※In case of Negative type:C=Blackness

Note2: Definition of viewing angle.

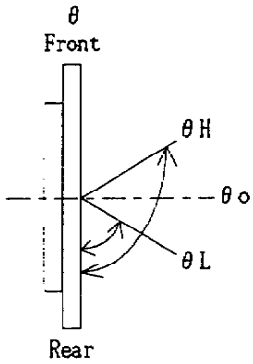


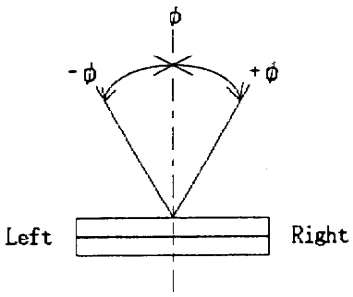


Note3: Definition of contrast ratio

Contrast ratio $K=\left(\frac{Bn}{Bs}\right)^N$

Measurement condition

1) Temperature 25℃

2) Frame frequency fF=70Hz

3) Viewing angle $\theta$ =90°

4) Supply voltage Vop=V1

V1=Voltage of best Contrast at Ta=25℃

※In case of Positive type : N=1

※In case of Negative type : N=-1

Bn:Reflectance value of non-selected condition. (Voltage of Photometer)

Bs:Reflectance value of selected condition. (Voltage of Photometer)

| | | | | |
|---|---|---|---|---|
| | ALPS ELECTRIC CO., | | | |
| | APPD. Jun.16.'97 | CHKD Jun.16.'97 | DSGD Jun.15.'97 | LRHDD101XA-1 |

## 6.Electrical specifications

### 6.1 Electrical characteristics

#### 6.1.1 LCD

| Item | Symbol | Condition | Min. | Typ. | Max. | Unit |
|---|---|---|---|---|---|---|
| Input high level voltage | VIH | — | 0.8xVDD | — | VDD | V |
| Input low level voltage | VIL | — | 0 | — | 0.2xVCC | V |
| Supply current | IDD | VDD=3.3V/EL:ON<br>VDD=3.3V/EL:OFF | —<br>— | T.B.D.<br>T.B.D. | —<br>— | mA |
| Supply current | IEE | VOP=21.5 | — | T.B.D. | — | mA |
| Supply voltage for logic | VDD | | 2.7 | — | 5.5 | V |

But this module does not include controller.

1)Display pattern=Checker

2)Frame frequency:70Hz

3)Ta=25℃

#### 6.1.2 Tablet

| Item | Specification |
|---|---|
| Resistance between terminal | X(#2-#4) :1125 $\pm_{325}$ Ω<br>Y(#1-#3) : 445 $\pm_{205}$ Ω |
| Insulated resistance | D C 25v ,Min. 20M Ω |
| Linearity | Max. ±1.5 %(Note1) |

Note 1: This specification applied to only tablet.
And calibration is more than 3 points.

#### 6.1.3 EL

| Item | Signal | Condition | Min. | Typ. | Max. | Unit | Note |
|---|---|---|---|---|---|---|---|
| Operating voltage | VEL | — | — | AC 100 | — | Vrms | — |
| Operating frequency | FEL | — | — | 400 | — | Hz | — |
| Luminous intensity | - | AC 100Vrms 400Hz | 50 | 65 | — | cd/m² | note1 |
| Power dissipation | IEL | AC 100Vrms 400Hz | — | — | T.B.D. | mA/cm² | — |

Note 1:The brightness is EL surface.

6.2 Block diagram

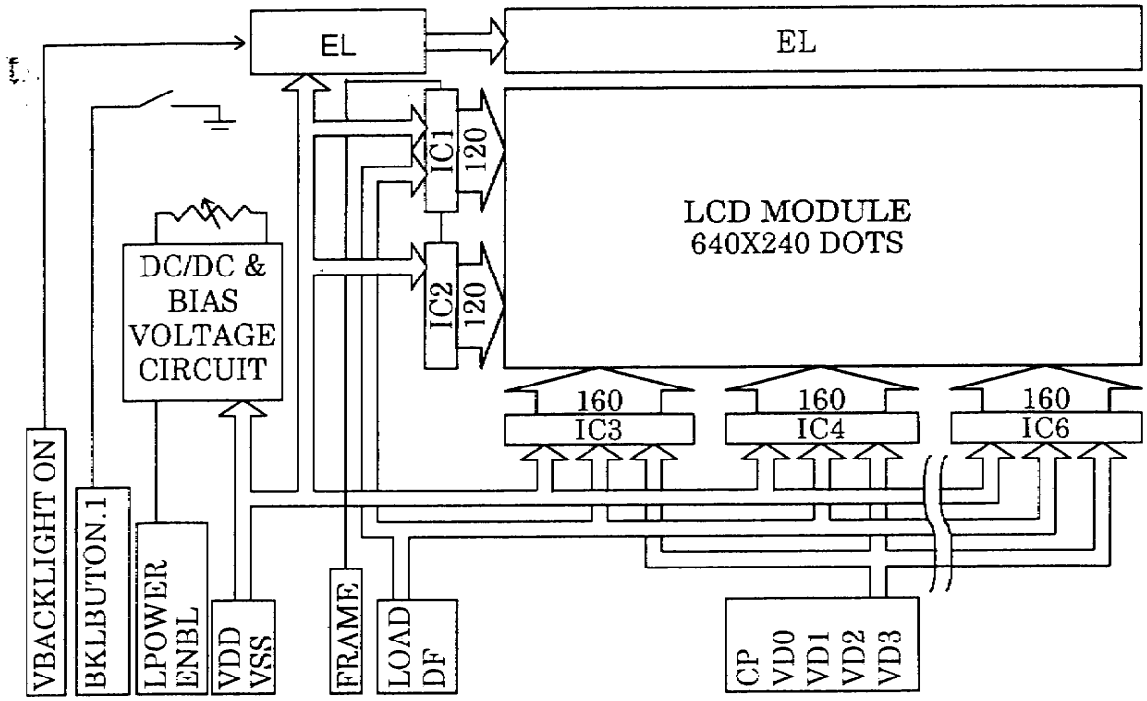


NOTE1:

1)Controller is not included.

6.3 Interface pin connection

| NO. | SYMBOL | FUNCTION |
|---|---|---|
| 1 | VSS | GND |
| 2 | D0 | Input display data signal |
| 3 | D1 | Input display data signal |
| 4 | D2 | Input display data signal |
| 5 | D3 | Input display data signal |
| 6 | VDD | Power supply for logic |
| 7 | /D.OFF | H:Display ON, L:Display OFF |
| 8 | CP | Clock pules for segment shift register |
| 9 | VSS | GND |
| 10 | LOAD | 1) Latch pulse of display data<br>2) Shift clock common driver |
| 11 | FRAME | Frame start signal<br>(Data signal of the shift register of the common driver) |
| 12 | B/L-EN | H:EL ON, L:EL OFF |
| 13 | POWER-EN | DC-DC Circuit control. H:Normal operating<br>L:Standby mode |
| 14 | VAD J | Connect potentiometer to adjust LCD contrast |
| 15 | VSS | GND |
| 16 | YU | Tablet output terminal on the glass surface(UP) |
| 17 | XL | Tablet output terminal on the film surface(LEFT) |
| 18 | YD | Tablet output terminal on the glass surface(DOWN) |
| 19 | XR | Tablet output terminal on the film surface(RIGHT) |
| 20 | VSS | GND |

6.4 Timing chart

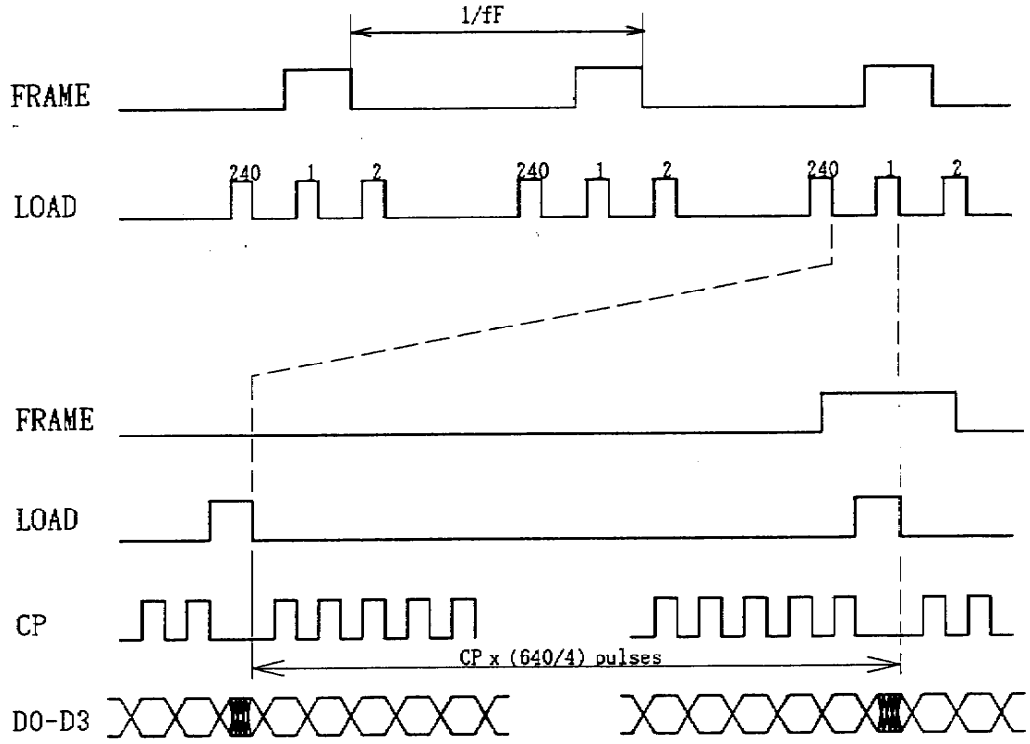

6.5 Relation between the input data and each Dot

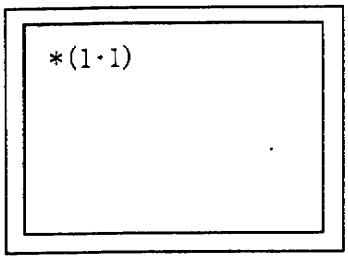


| | SEG 1 | SEG 2 | SEG 3 | SEG 4 | --- | SEG 640 |
|---|---|---|---|---|---|---|
| Com 1 | 1 · 1 | 1 · 2 | 1 · 3 | 1 · 4 | --- | 1 · 640 |
| Com 2 | 2 · 1 | 2 · 2 | 2 · 3 | | | |
| Com 3 | 3 · 1 | 3 · 3 | | | | |
| Com240 | 240 · 1 | ---------- | | | | 240 · 640 |

D0: (1·4)、(1·8)·····(240·640)
D1: (1·3)、(1·7)·····(240·639)
D2: (1·2)、(1·6)·····(240·638)
D3: (1·1)、(1·5)·····(240·637)

6.6 Switching characteristics

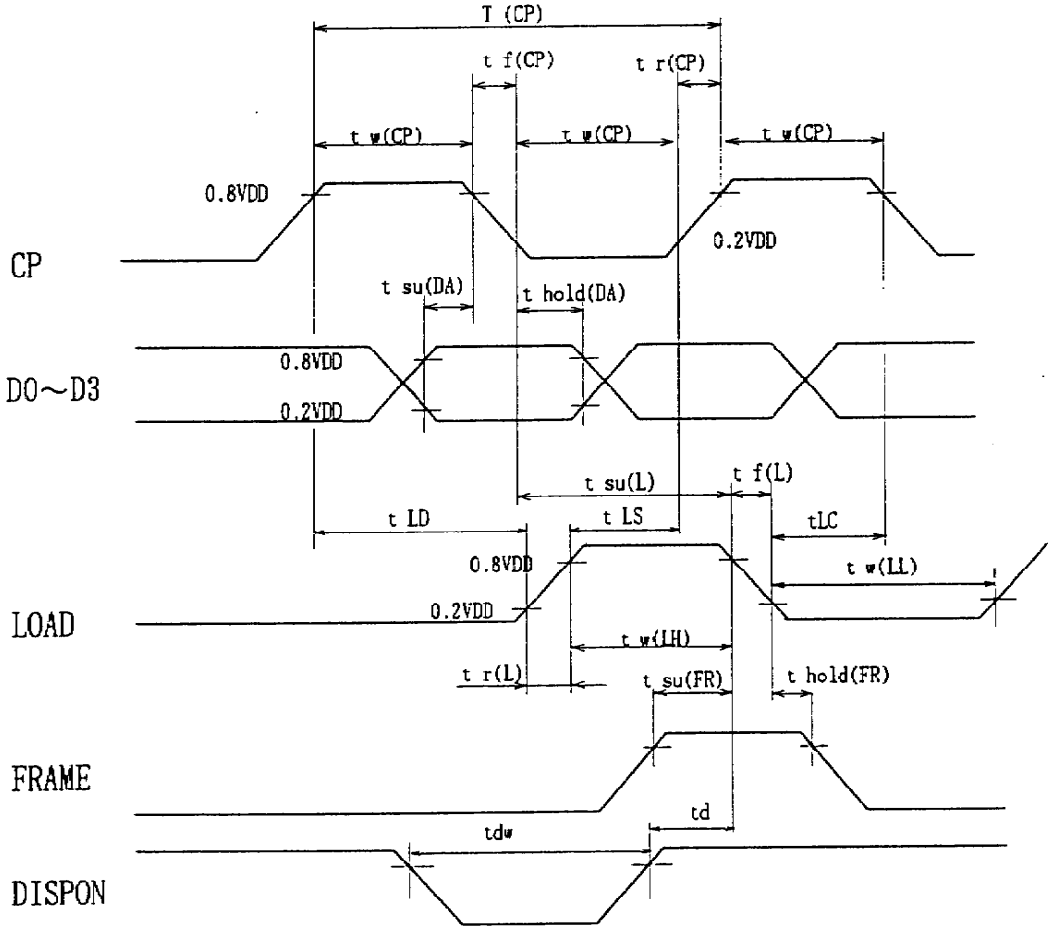

| CLASS NO. | TITLE | SPECIFICATION |
|---|---|---|

(VDD=2.7～5.5V、Ta=0～50℃)

| Item | Symbol | Condition | Min. | Typ. | Max. | Unit |
|---|---|---|---|---|---|---|
| CP cycle Time | T (CP) | note1 | 100 | — | — | ns |
| CP high level pulse width | t w(CP) | — | 40 | — | — | ns |
| CP rise time | t r(CP) | note2 | — | — | 50 | ns |
| CP fall time | t f(CP) | note2 | — | — | 50 | ns |
| Data setup time | t su(DA) | — | 38 | — | — | ns |
| Data hold time | t hold(DA) | — | 38 | — | — | ns |
| LOAD→ CP time | t LC | — | 200 | — | — | ns |
| CP→ LOAD time | t LD | — | 0 | — | — | ns |
| CP→ LOAD time | t LS | | 51 | | | ns |
| LOAD LOW level pulse width | t w(LL) | — | 660 | — | — | ns |
| LOAD high level pulse width | t w(LH) | — | 80 | — | — | ns |
| LOAD setup time | t su(L) | — | 100 | — | — | ns |
| LOAD rise time | t r(L) | — | — | — | 50 | ns |
| LOAD fall time | t f(L) | — | — | — | 50 | ns |
| Setup time FRAME→LOAD | t su(FR) | — | 100 | — | — | ns |
| Hold time FRAME→LOAD | t hold(FR) | — | 30 | — | — | ns |
| DISPON CANCELLATION TIME | td | - | 100 | | | ns |
| DISPON LOW TIME | tdw | - | 1.2 | | | μs |

NOTE1: tr(cp), tf(cp) ≦ 11ns

NOTE2: (t(CP)-tw(CPL)-tw(CPH))/2 is maximum in the case of high speed operation.

| ALPS ELECTRIC CO., | | | |
|---|---|---|---|
| APPD. Jun 16 '99 | CHKD Jun 16. '99 | DSGD Jun 15 '99 | LRHDD101XA-1 |

6.7 Precaution

6.7.1 Timing

Follow the power ON/OFF sequence show bellow to prevent a latch-up or DC operation the LCD module.

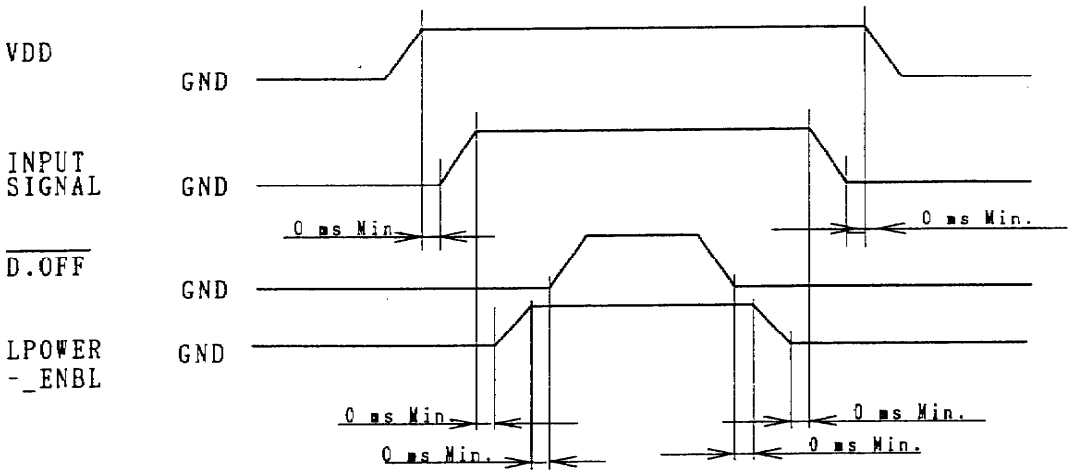


6.7.2

DF signal affects to display quality, power consumption and others.
Previous arrangement is recommended to design DF signal.

7. Endurance performance

7.1 Tablet

7.1.1 General matters

Test condition

Test and measurement are performed under the following conditions, unless otherwise specified.

Temperature :20±15℃

Humidity :65±20 %R.H.

Pressure :860～1060 hPa(mbar)

In case of doubtful judgment, it is performed under the following conditions.

Temperature :20±2℃

Humidity :65±5 %R.H.

Pressure :860～1060 hPa(mbar)

7.1.2 Endurance performance

| Item | Test conditions | Standard |
|---|---|---|
| Writing life | Take the pen to go and return with 1.96N(200gf) 100,000 cycles. | To satisfy standard 6.1.2 and input load. |
| Vibration | MIL-STD-202F201A<br>Frequency:10～55Hz<br>Max amplitude:1.52mm(0.06in)<br>Sweeping:10-55-10 Hz 1minuet<br>Logarithm or plain<br>Direction:Normally 3 directions<br>Test times:2 hour each total 6 hour | To satisfy standard 6.1.2 and input load. |
| Unit shock | MIL-STD-202F213B<br>Shock acceleration:100G<br>6 directions, 3times each , total 18 times | To satisfy standard 6.1.2 and input load. |
| Hitting life | Hit one point with the rubber(top R0.8Hs) 0.02N(200gf), 1 million. | To satisfy standard 6.1.2 and input load. |
| Unti shock (Hard materials) | Place tablet above 0.5mm from floor. Fall φ10 steel ball(5.5g) onto tablet from 1.8m height. (Test time:1 time)<br>*Small scratches are disregarded. | To satisfy standard 6.1.2 and input load. |

| Item | Test conditions | Standard |
|---|---|---|
| Unti decreasing pressure | 420mmHg 24hour<br>After above condition, leave sample under standard temp and pressure, then measure sample. | To satisfy standard 6.1.2 and input load. |
| Unti chemicals | Wipe tablet(only hard coat face)with soft cloth which is moistured with following chemicals.<br>Toluene, Acetone, Methanol, Alcohl, Artifical sweat, Petroleum ether. | No cosmetic harm |
| Unti ware conductor insertion and drawing out to the connector. | Measure after 10 times insertion and drawing out to the designated or equivalent connector that pitch and tail's thickness are suited. | To satisfy standard 6.1.2 and input load. |

7.2 EL

7.2.1 Endurance performance

| Item | Test condition | Acceptance criteria |
|---|---|---|
| Normal temperature resistance under load. | AC 100Vrms, 400Hz<br>20℃, 60%RH<br>800Hr | A, B, C, |

Acceptance criteria

A:The beginning of the EL luminance/2 and less.

B:Remarkable transformation, changing color, clack, swell.

C:The lighting current is 21mA and over.

8. EL appearance

8.1 Appearance at condition not illuminated

| Item | Acceptance criteria | Note |
|---|---|---|
| Dot type of foreign material. | (1)Under φ0.3:Good<br>(2) φ0.3～φ0.5:MAX.2 pieces can be allow.<br>(3)Over φ0.5:Failure | ——— |
| Thread type of foreign material. | (1)Under 5mm:MAX.1 pieces can be allow.<br>(3)Over 5mm:Failure | Applied for the width less than 200μ.<br>200μ and over are specified as foreign material. |

8.2 Appearance at condition illuminated

| Item | Acceptance criteria | Note |
|---|---|---|
| Dot type of foreign material. | (1)Under φ0.3:Good<br>(2) φ0.3～φ0.5:MAX.2 pieces can be allow.<br>(3)Over φ0.5:Failure | ——— |
| Thread type of foreign material. | (1)Under 5mm:MAX.1 pieces can be allow.<br>(3)Over 5mm:Failure | Applied for the width less than 200μ.<br>200μ and over are specified as foreign material. |
| Brightness uneven | Brightness min/max≧0.8 | ——— |

9. Reliability

Judgment normal performance under these conditions

9.1 High temperature operation test

Normal performance :After leaving them in on-state under normal humidity (less than 30% R.H.) at 55℃ for 120 hours.

9.2 Low temperature operation test

Normal performance :After leaving them in on-state under normal humidity (less than 60% R.H.) at -10℃ for 120 hours.

Pay attention to keep dewdrops from the module during this test.

9.3 High temperature storage test

Normal performance :After leaving them in off-state under normal humidity (less than 30% R.H.) at 70℃ for 120 hours.

9.4 Low temperature storage test

Normal performance :After leaving them in off-state under normal humidity (less than 60% R.H.) at -20℃ for 120 hours.

9.5 High temperature and high humidity storage test

Normal performance :After leaving them in off-state under the condition of 95% R.H. and 40℃ for 120hours.

Pay attention to keep dewdrops from the module during this test.

9.6 Heat cycle test

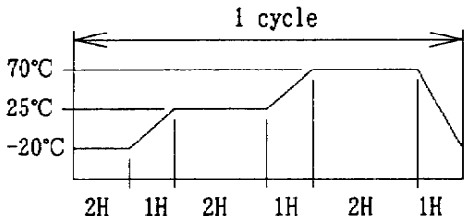


Normal performance : 5 cycles

9.7 Vibration test

Normal performance : After leaving them under the following conditions.

Frequency:10～55Hz

Maximum acceleration :1.5G(14.7m/sec$^2$)

1 cycle time : 1.minute

Time : X.Y.Z each direction for 15 minutes

9.8 Drop impact test

Normal performance : After dropping them 0.7 meter to strike a 30mm lauan board in packing.

9.9 Life time

Expected life is more than 50000 hours under normal operating condition.

10. Packing Specification

T. B. D.

| CLASS NO. | TITLE TABLE OF DATE-REVISION | |
|---|---|---|
| | | |

date-revision

Model No. : LRHDD101XA-1

| Date | Item | Revision point |
|---|---|---|
| | | |

| | | | | | |
|---|---|---|---|---|---|
| | | | | | |
| | | | | | |
| | | | | | |
| | | | | | |

ALPS ELECTRIC CO.,

| APPD. | CHKD | DSGD. | LRHDD101XA-1 |
|---|---|---|---|
| Jun 16.'97 | Jun 16.'97 | Jun.15.'97 | |

| CLASS NO. | TITLE | |
|---|---|---|
| | SPECIFICATION | |

(VDD=2.7～5.5V、Ta=-10～55℃)

| Item | Symbol | Condition | Min. | Typ. | Max. | Unit |
|---|---|---|---|---|---|---|
| CP cycle Time | T (CP) | note1 | 100 | — | — | ns |
| CP high level pulse width | t w(CP) | — | 40 | — | — | ns |
| CP rise time | t r(CP) | note2 | — | — | 50 | ns |
| CP fall time | t f(CP) | note2 | — | — | 50 | ns |
| Data setup time | t su(DA) | — | 38 | — | — | ns |
| Data hold time | t hold(DA) | — | 38 | — | — | ns |
| LOAD→ CP time | t LC | — | 200 | — | — | ns |
| CP→ LOAD time | t LD | — | 0 | — | — | ns |
| CP→ LOAD time | t LS | | 51 | | | ns |
| LOAD LOW level pulse width | t w(LL) | — | 660 | — | — | ns |
| LOAD high level pulse width | t w(LH) | — | 80 | — | — | ns |
| LOAD setup time | t su(L) | — | 100 | — | — | ns |
| LOAD rise time | t r(L) | — | — | — | 50 | ns |
| LOAD fall time | t f(L) | — | — | — | 50 | ns |
| Setup time FRAME→LOAD | t su(FR) | — | 100 | — | — | ns |
| Hold time FRAME→LOAD | t hold(FR) | — | 30 | — | — | ns |
| DISPON CANCELLATION TIME | td | - | 100 | | | ns |
| DISPON LOW TIME | tdw | - | 1.2 | | | μs |

NOTE1: tr(cp), tf(cp) ≦ 11ns

NOTE2: (t(CP)-tw(CPL)-tw(CPH))/2 is maximum in the case of high speed operation.

| | | | | |
|---|---|---|---|---|
| ALPS ELECTRIC CO., | | | | |
| APPD. | CHKD | DSGD | LRHDD101XA-1 | |

(VDD=2.7～5.5V、Ta=-10～55℃)

| Item | Symbol | Condition | Min. | Typ. | Max. | Unit |
|---|---|---|---|---|---|---|
| CP cycle Time | T (CP) | note1 | 100 | — | — | ns |
| CP high level pulse width | t w(CP) | — | 40 | — | — | ns |
| CP rise time | t r(CP) | note2 | — | — | 50 | ns |
| CP fall time | t f(CP) | note2 | — | — | 50 | ns |
| Data setup time | t su(DA) | — | 38 | — | — | ns |
| Data hold time | t hold(DA) | — | 38 | — | — | ns |
| LOAD→ CP time | t LC | — | 200 | — | — | ns |
| CP→ LOAD time | t LD | — | 0 | — | — | ns |
| CP→ LOAD time | t LS | | 51 | | | ns |
| LOAD LOW level pulse width | t w(LL) | — | 660 | — | — | ns |
| LOAD high level pulse width | t w(LH) | — | 80 | — | — | ns |
| LOAD setup time | t su(L) | — | 100 | — | — | ns |
| LOAD rise time | t r(L) | — | — | — | 50 | ns |
| LOAD fall time | t f(L) | — | — | — | 50 | ns |
| Setup time FRAME→LOAD | t su(FR) | — | 100 | — | — | ns |
| Hold time FRAME→LOAD | t hold(FR) | — | 30 | — | — | ns |
| DISPON CANCELLATION TIME | td | - | 100 | | | ns |
| DISPON LOW TIME | tdw | - | 1.2 | | | μs |

NOTE1: tr(cp), tf(cp) ≦ 11ns

NOTE2: (t(CP)-tw(CPL)-tw(CPH))/2 is maximum in the case of high speed operation.

## 6.Electrical specifications

### 6.1 Electrical characteristics

#### 6.1.1 LCD

| Item | Symbol | Condition | Min. | Typ. | Max. | Unit |
|---|---|---|---|---|---|---|
| Input high level voltage | VIH | — | 0.8xVDD | — | VDD | V |
| Input low level voltage | VIL | — | 0 | — | 0.2xVCC | V |
| Supply current | IDD | VDD=3.3V | —<br>— | T.B.D.<br>T.B.D. | —<br>— | mA |
| Supply current | IEE | VOP=24.5 | — | T.B.D. | — | mA |
| Supply voltage for logic | VDD | | 2.7 | — | 5.5 | V |

But this module does not include controller.

1)Display pattern=Checker

2)Frame frequency:70Hz

3)Ta=25℃

#### 6.1.2 Tablet

| Item | Specification |
|---|---|
| Resistance between terminal | X(#2-#4) :1125 ±325 Ω<br>Y(#1-#3) : 445 ±205 Ω |
| Insulated resistance | D C 25v ,Min. 20M Ω |
| Linearity | Max. ±1.5 %(Note1) |

Note 1: This specification applied to only tablet.
And calibration is more than 3 points.

#### 6.1.3 CCFL

T.B.D.

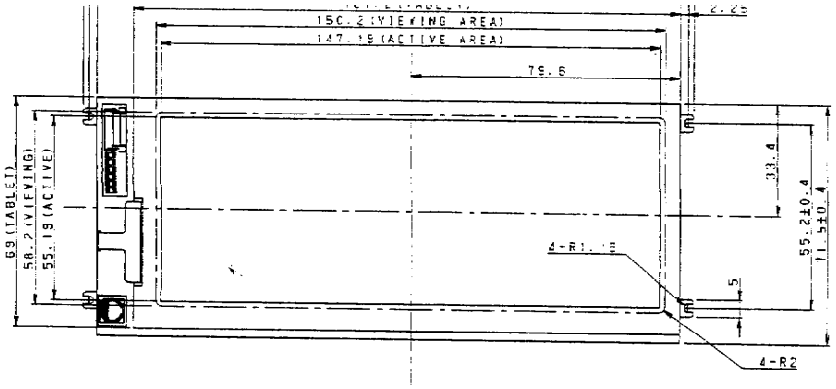


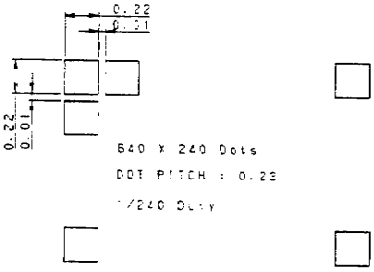


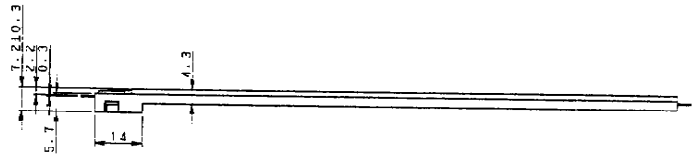


NTERFACE CN1

| N No. | SYMBOL | PIN No. | SYMBOL |
|---|---|---|---|
| 1 | VSS | 11 | FRAME |
| 2 | DC | 12 | BACK_LIGHT-EN |
| 3 | D1 | 13 | POWER-EN |
| 4 | D2 | 14 | VADJ |
| 5 | D3 | 15 | VSS |
| 6 | VDD | 16 | YU |
| 7 | /D.OFF | 17 | XL |
| 8 | CP | 18 | YD |
| 9 | VSS | 19 | XR |
| 10 | LOAD | 20 | VSS |

5) VIEWING ANGL T.B.D

4) CN1 (CONNECTOR: T.B.D)

3) EL BACK_LIGHT

2) TRANSFLECTIVE TYPE (POSITIVE TYPE)

1) RF-STN B/W MODE

TOLERANCE LIST

| DIMENSION | TOLERANCE |
|---|---|
| L≤6 | ±0.25 (mm) |
| 6<L≤18 | ±0.3 (mm) |
| 18<L≤50 | ±0.4 (mm) |
| 50<L≤125 | ±0.5 (mm) |
| 125<L | ±0.6 (mm) |
| ANGLE | ±0.5 (deg) |

| SYMB. | DATE | APPD | CHKD | DSGD |
|---|---|---|---|---|

| VARIETY NO. | MATERIAL NAME | MATERIAL NO. | NOTE |
|---|---|---|---|

ALPS ELECTRIC CO., LTD.

DSGD. '97. 6. 4. FDJ Fumihiko Sagawa

CHKD. Jun.9.'97

APPD. Jun.9.'97

SCALE 1 : 1

NUMBER LRHDC101XA

TITLE LCD MODU

UNIT mm

APPRO

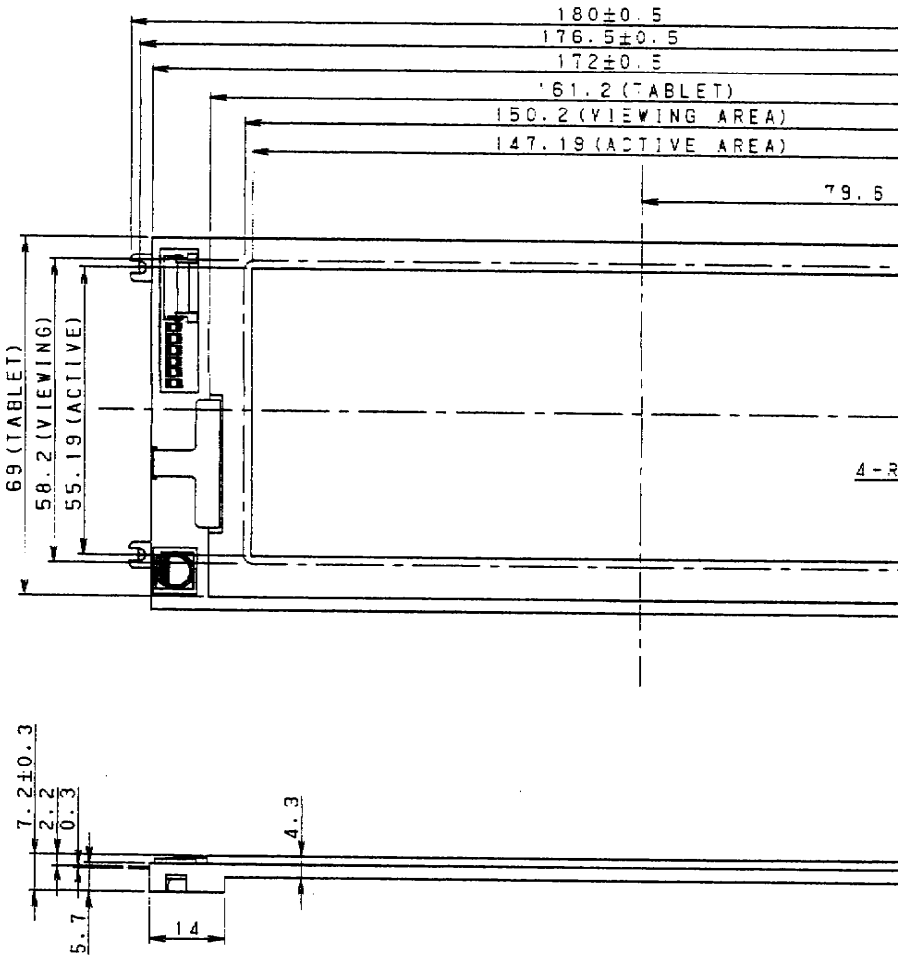


INTERFACE CN1

| PIN No. | SYMBOL | PIN No. | SYMBOL |
|---|---|---|---|
| 1 | VSS | 11 | FRAME |
| 2 | D0 | 12 | BACKLIGHT-EN |
| 3 | D1 | 13 | POWER-EN |
| 4 | D2 | 14 | VADJ |
| 5 | D3 | 15 | VSS |
| 6 | VDD | 16 | YU |
| 7 | /D.OFF | 17 | XL |
| 8 | CP | 18 | YD |
| 9 | VSS | 19 | XR |
| 10 | LOAD | 20 | VSS |

SMALLER SCALE

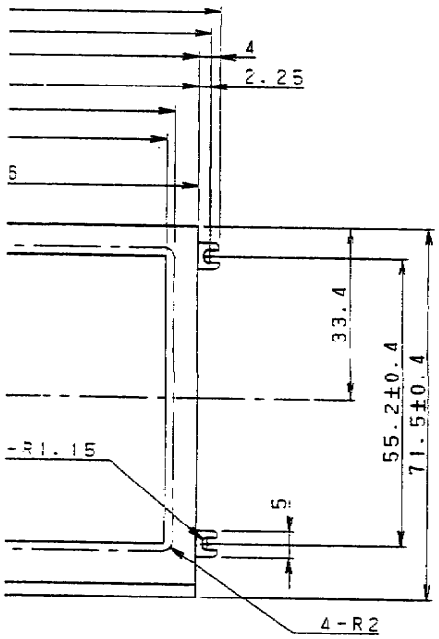


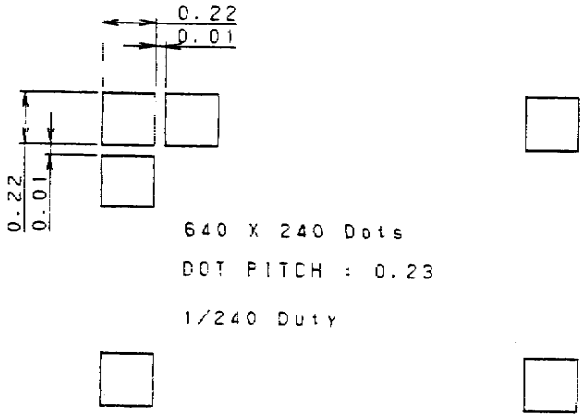


5) VIEWING ANGL T.B.D

4) CN1 (CONNECTOR: T.B.D)

3) EL BACKLIGHT

2) TRANSFLECTIVE TYPE (POSITIVE TYPE)

1) RF-STN B/W MODE

TOLERANCE LIST

| DIMENSION | TOLERANCE |
|---|---|
| L≤6 | ±0.25 (mm) |
| 6<L≤18 | ±0.3 (mm) |
| 18<L≤50 | ±0.4 (mm) |
| 50<L≤125 | ±0.5 (mm) |
| 125<L | ±0.6 (mm) |
| ANGLE | ±0.1° (deg) |

| VARIETY NO. | MATERIAL NAME | MATERIAL NO. | NOTE |
|---|---|---|---|

| SYMB | DATE | APPD | CHKD | DSGD |
|---|---|---|---|---|

ALPS ELECTRIC CO., LTD.

| | | | |
|---|---|---|---|
| DSGD. '97. 6. 4. ED3 Fumihiko Sasawa | SCALE 1 : 1 | NUMBER LRHDD101XA | |
| CHKD. Jun 9.'97 Y.Fujiwara | | TITLE LCD MODUL | |
| APPD. Jun.9.'97 Y.Fujiwara | UNIT mm | | |

5 6

APPROV

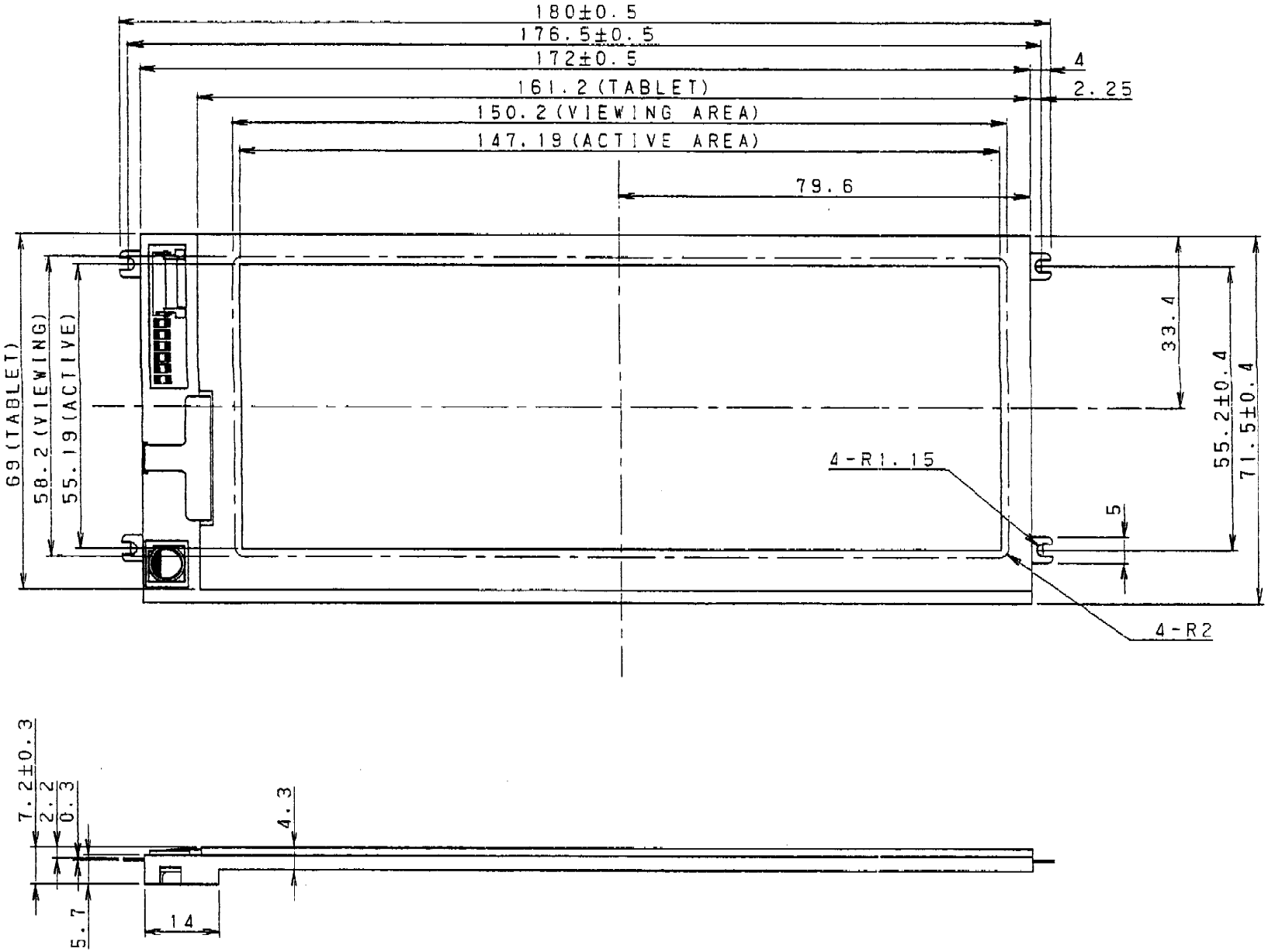
180±0.5
176.5±0.5
172±0.5
161.2 (TABLET)
150.2 (VIEWING AREA)
147.19 (ACTIVE AREA)
79.6
4
2.25
69 (TABLET)
58.2 (VIEWING)
55.19 (ACTIVE)
33.4
55.2±0.4
71.5±0.4
4-R1.15
5
4-R2
7.2±0.3
2.2
0.3
4.3
5.7
14