| | |
|---|---|
| Doc. version | 0.1 |
| Effective date | 2007/03/09 |
| Total pages | 15 |
| (Not include this cover page) | |

# Product Specification

## 1.8”COLOR TFT-LCD

MODEL NAME: A018HN01 V1

Note: The content of this specification is subject to change.

# Record of Revision

| Version | Revise Date | Page | Content |
|---|---|---|---|
| 0.0 | 2006/02/15 | | First draft |
| 0.1 | 2007/3/9 | 11 | Update packing figure. |
| | | | |
| | | | |
| | | | |
| | | | |
| | | | |
| | | | |
| | | | |
| | | | |
| | | | |
| | | | |
| | | | |
| | | | |
| | | | |
| | | | |
| | | | |
| | | | |
| | | | |

# Index

# A. General Specification

## 1. Physical specifications

| NO. | Item | Specification | Remark |
|---|---|---|---|
| 1 | Display method | Active matrix TFT | |
| 2 | Display mode | Transmissive | |
| 3 | Display resolution (dot) | 176 X RGB (H) X 220(V) | |
| 4 | Active area (mm) | 27.984 (H) × 34.980 (V) | |
| 5 | Screen size (inch) | 1.76 (Diagonal) | |
| 6 | Pixel pitch (mm) | 0.159(H) X 0.159(V) | |
| 7 | Color configuration | R. G. B. stripe | |
| 8 | Display color | 65k | |
| 9 | Surface treatment of Upper Polarizer | Hard Coating | |
| 10 | Transmittance | 5.0% | |
| 11 | Overall dimension (mm) | 34(H)x 44.83(V)x 2.7(T) | |
| 12 | View Direction | 12 o'clock (gray scale inversion) | |
| 13 | Weight (g) | 7.5 g | |

Key Features

a. Allows direct RAM data display (RAM is included in the source driver):
A single pixel consists of three dots (RGB), and a single dot consists of 6-bit data (64 gray-scale).
Built-in RAM capacity is 176x3x240x6= 760,320 bits

b. Able to display moving pictures up to 30 FPS, and support area scrolling and partial display

c. Able to support 8/16 bit parallel i80 series CPU interface

d. Low power consumption and single chip driver solution

## 2. Block diagram

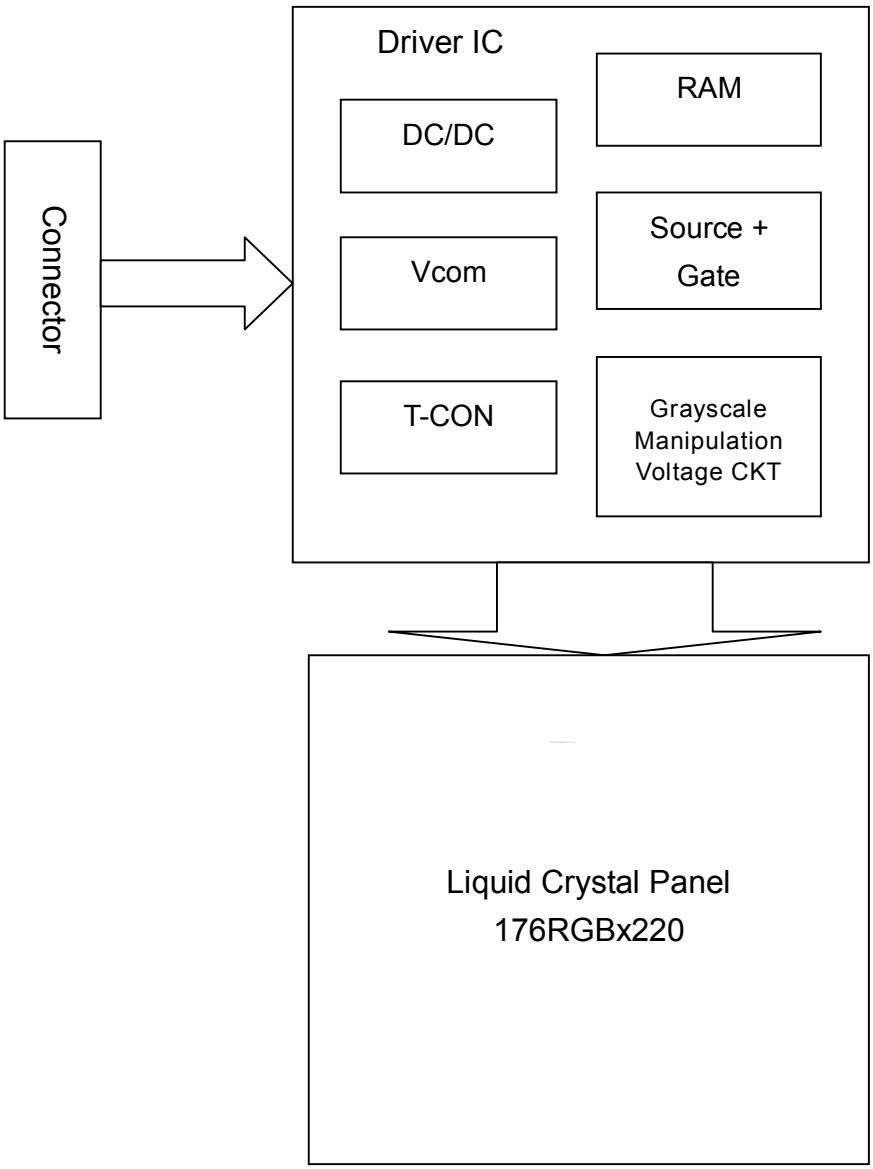

# B. Electrical Specifications

## 1. FPC pin assignment of FPC

| Pin No. | Pin name | Description | Pin No. | Pin name | Description |
|---|---|---|---|---|---|
| 1 | Anode | Anode | 17 | PD8 | Data bit 7 |
| 2 | Cathode 1 | Cathode 1 | 18 | PD9 | GND |
| 3 | Cathode 2 | Cathode 2 | 19 | PD10 | Data bit 8 |
| 4 | Cathode 3 | Cathode 3 | 20 | PD11 | Data bit 9 |
| 5 | CS/ | Chip selection | 21 | PD12 | Data bit 10 |
| 6 | RS | Register selection | 22 | PD13 | Data bit 11 |
| 7 | WR/SCL | Write | 23 | PD14 | Data bit 12 |
| 8 | RD/ | Read | 24 | PD15 | Data bit 13 |
| 9 | PD0 | GND | 25 | PD16 | Data bit 14 |
| 10 | PD1 | Data bit 0 | 26 | PD17 | Data bit 15 |
| 11 | PD2 | Data bit 1 | 27 | RESET/ | Reset |
| 12 | PD3 | Data bit 2 | 28 | Dummy | GND |
| 13 | PD4 | Data bit 3 | 29 | VCI | Analog power |
| 14 | PD5 | Data bit 4 | 30 | IOVCC | I/O Power |
| 15 | PD6 | Data bit 5 | 31 | GND | GND |
| 16 | PD7 | Data bit 6 | | | |

## 2. Absolute maximum ratings ($V_{SS}$=0V)

| Item | Symbol | Condition | Min. | Max. | Unit | Remark |
|---|---|---|---|---|---|---|
| Input power supply | IOVCC | | -0.3 | 4.6 | V | |
| Analog power supply | VCI | | -0.3 | 4.6 | V | |
| Logic input voltage | VCC | | -0.3 | IOVCC+0.3 | V | Note 2 |
| Operating temperature (Ambient) | $T_{OPA}$ | | 0 | 60 | ℃ | |
| Storage temperature (Ambient) | $T_{STG}$ | | -25 | 80 | ℃ | |

Note 1: If the module exceeds the absolute maximum ratings, it may be damaged permanently. Also, if the module operated with the absolute maximum ratings for a long time, its reliability may drop.

Note 2: D0 ~D15, $\overline{CS}$ , $\overline{RS}$ , $\overline{WR}$ , $\overline{RD}$ , $\overline{RESET}$

## 3. Electrical Characteristics

3.1 Typical operating conditions

| Item | | Symbol | Condition | Min. | Typ. | Max. | Unit | Remark |
|---|---|---|---|---|---|---|---|---|
| IOVCC (Interface Power) | | IOVCC | | 1.8 | - | 3.3 | V | Note 1 |
| VCI (DC/DC) | | VCI | | 2.8 | - | 3.3 | V | |
| Input Signal Voltage | H Level | $V_{IH}$ | IOVCC =1.8~3.7V | 0.8*IOVCC | - | IOVCC | V | Note 2 |
| | L Level | $V_{IL}$ | IOVCC=1.8~3.7V | -0.3 | - | 0.2*IOVCC | V | |
| Output signal voltage | H Level | $V_{OH}$ | | 0.8*IOVCC | - | - | V | Note 3 |
| | L Level | $V_{OL}$ | IOVCC=1.8~3.3V | - | - | 0.2*IOVCC | V | |

Note 1: The operations are guaranteed under the recommended operating conditions only. These operations are not guaranteed if a quick voltage change occurs during operation. To prevent noise, a bypass capacitor must be inserted into the line close to power pin.

Note 2: $\overline{CS}$ , $\overline{RS}$ , DN (N=0 ~15), $\overline{WR}$ , $\overline{RD}$ , $\overline{RESET}$ ,

Note 3: DN (N=0 ~15)

3.2 Power consumption (Note 1)

| Mode | Symbol | Condition | Min. | Typ. | Max. | Unit | Remark |
|---|---|---|---|---|---|---|---|
| Stand-by | $P_S$ | $V_{CC}$ = 2.8V | - | | 0.01 | mW | Note 2 |
| Still (65k colors) | $P_g$ | | - | - | 11 | mW | Note 3 |

Note 1: No backlight is driven

Note 2: Display off, black pattern

Note 3: Full screen with 65K colors (Line inversion)

## 4. AC Characteristics (CPU i80 system)

Normal Write Mode (HWM/LHWM=0) (Vcc=RVcc=2.40~3.60V, IOVCC=1.65~3.6V)

| Item | | Symbol | Unit | Timing diagram | Min | Typ. | Max |
|---|---|---|---|---|---|---|---|
| Bus Cycle time | Write | Tcycw | ns | Figure1 | 120 | - | - |
| | Read | Tcycr | ns | Figure1 | 400 | - | - |
| Write low level pulse width | Write | PWlw | ns | Figure1 | 40 | - | - |
| Read low level pulse width | Read | PWlr | ns | Figure1 | 200 | - | - |
| Write low level pulse width | Write | PWhw | ns | Figure1 | 50 | - | - |
| Read low level pulse width | Read | PWhr | ns | Figure1 | 200 | - | - |
| Write/Read rise/fall time | | Twrr, twrf | ns | Figure1 | - | - | 25 |
| Setup time | Write (RS~CS*, WR*) | Tas | ns | Figure1 | 0 | - | - |
| | Read (RS~CS*, RD*) | | ns | Figure1 | 10 | - | - |
| Address hold time | | Tah | ns | Figure1 | 2 | - | - |
| Write data setup time | | Tdsw | ns | Figure1 | 25 | - | - |
| Write data hold time | | Th | ns | Figure1 | 5 | - | - |
| Read data delay time | | Tddr | ns | Figure1 | - | - | 100 |
| Read data hold time | | Tdhr | ns | Figure1 | 5 | - | - |

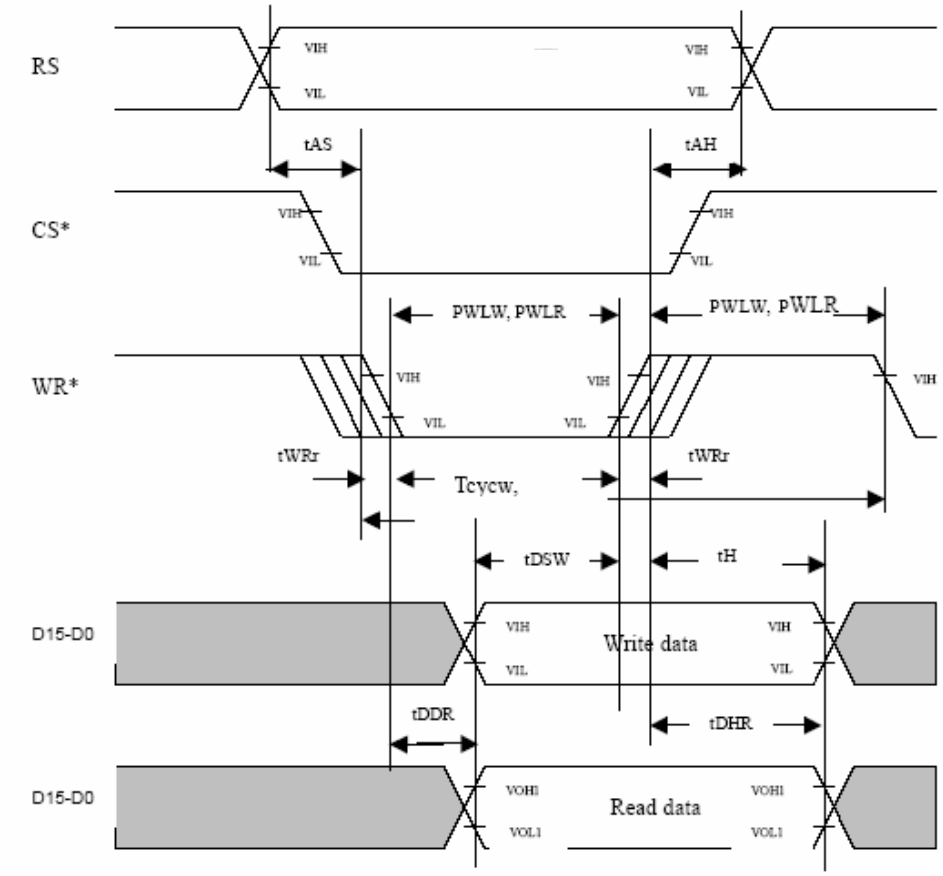

## C. Optical Specification

| Item | | Symbol | Condition | Min. | Typ. | Max. | Unit | Remark |
|---|---|---|---|---|---|---|---|---|
| Response time | Rise | Tr | $\theta$ =0° | - | 15 | - | ms | Note 4 |
| | Fall | Tf | | - | 20 | - | ms | |
| Central Brightness | | - | $\theta$ =0° | 200 | 300 | - | nit | - |
| Contrast Ratio | | CR | At optimize viewing angle | 200 | 300 | | - | Note 5 |
| Viewing Angle | Top | - | CR≧10 | 45 | 55 | - | deg. | Note 6 |
| | Bottom | | | 40 | 50 | - | | |
| | Left | | | 55 | 65 | - | | |
| | Right | | | 55 | 65 | - | | |
| Color Tone | White | Wx | $\theta$ =0° | 0.27 | 0.32 | 0.37 | - | - |
| | | Wy | | 0.29 | 0.34 | 0.39 | | |

Note 1: Ta =25℃±2℃.

Note 2: To be measured in the dark room.

Note 3: To be measured at the center area of panel with a aperture of 1° by Topcon luminance meter BM-5A , after 10 minutes module operation.

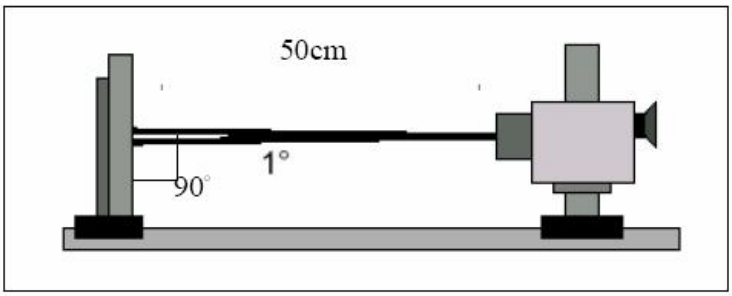

Note 4: Definition of response time:

The output signals of photo detector are measured when the input signals are changed from “black” to “white” (falling time) and from “white” to “black” (rising time), respectively. The response time is defined as the time interval between the 10% and 90% of amplitudes. Refer to figure as below:

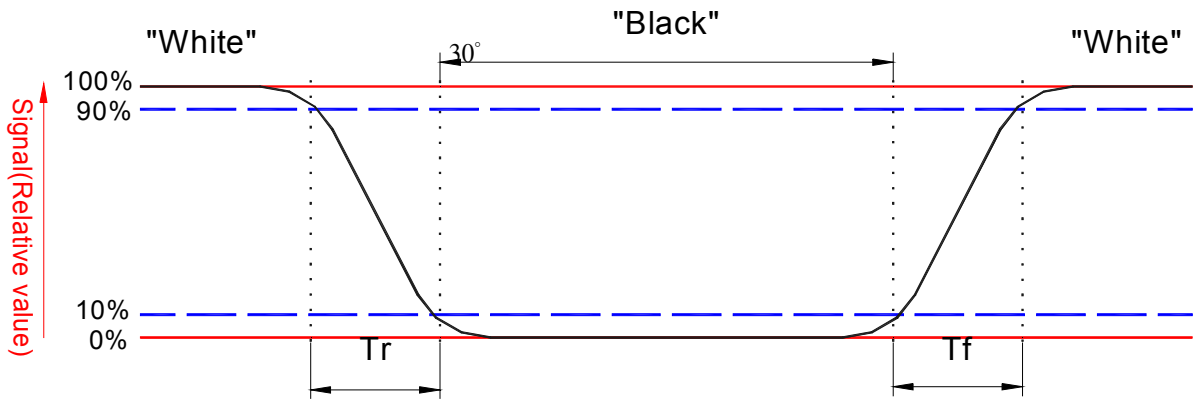


Note 5. Definition of contrast ratio:

Contrast ratio is calculated with the following formula.

$$\text{Contrast ratio (CR)} = \frac{\text{Photo detector output when LCD is at “White” state}}{\text{Photo detector output when LCD is at “Black” state}}$$

Note 6. Definition of viewing angle:

Refer to the figure as below.

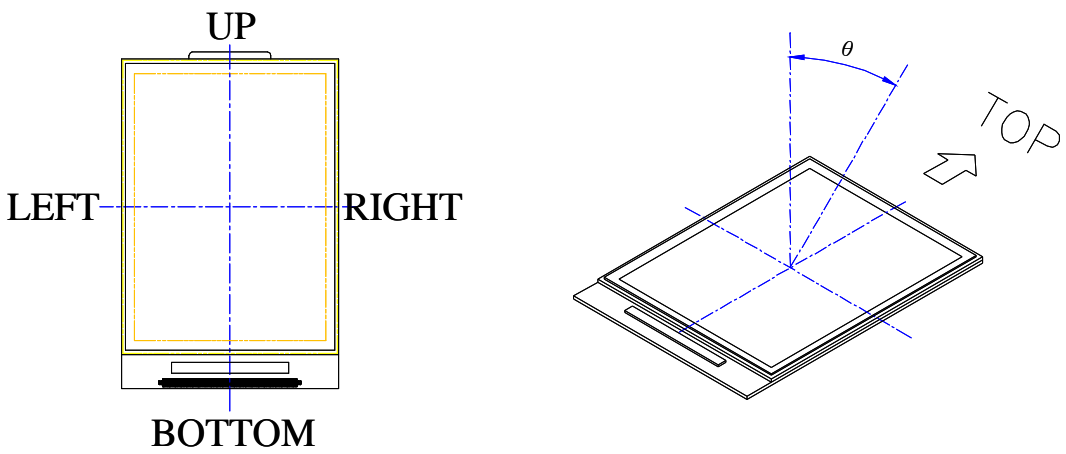

## D. Reliability Test Items

| No. | Test items | Condition | | Remark |
|---|---|---|---|---|
| 1 | High temperature storage | Ta= 80℃ | 240H | |
| 2 | Low temperature storage | Ta= -30℃ | 240H | |
| 3 | High temperature operation | Ta=70℃ | 240H | |
| 4 | Low temperature operation | Ta= -10℃ | 240H | |
| 5 | High temperature and high humidity | Ta= 60℃. 90% RH | 240H | Operation |
| 6 | Heat shock | -30℃~70℃/10 cycles 4H/cycle | | Non-operation |
| 7 | Electrostatic discharge | ±200V, 200pF(0Ω), once for each terminal | | Non-operation |
| 8 | Drop (with carton) | Height: 80cm<br>1 corner, 3 edges, 6 surfaces | | |

Note 1: Ta: Ambient Temperature.

Note 2: After finishing the test, leave the samples under room temperature and normal humidity for 2 hours, and then this module should work normally.

Note 3: Failure Judgment Criterion:

a. Squarely inspect all LCD function before and after reliability test.

b. In the standard conditions, there is not display function NG issue occurred. All the cosmetic specification is judged before the reliability stress.

## E. Packing form

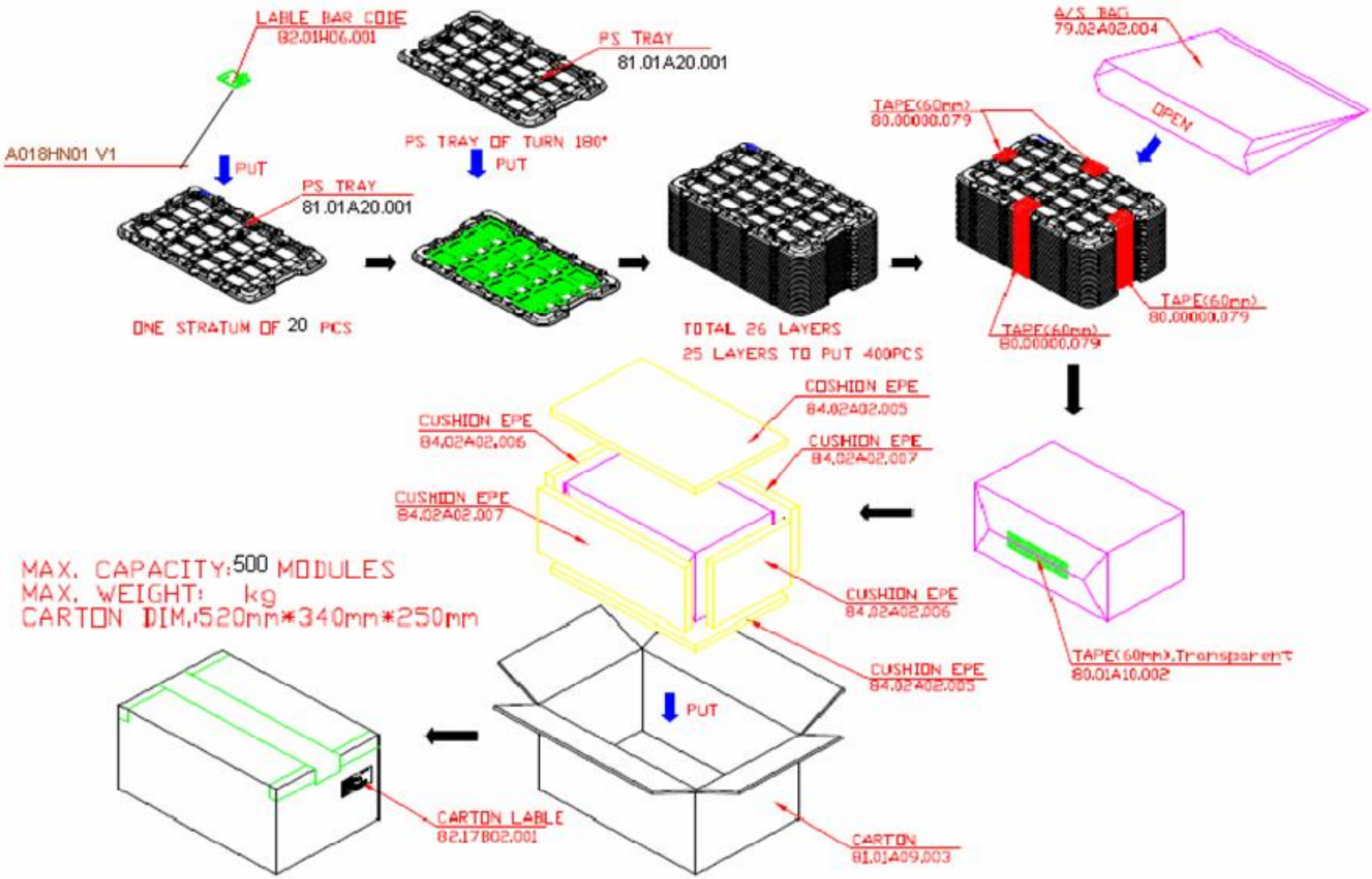

# F: Outline dimensions of TFT LCD drawing

Notes:
1.General tolerance is ± 0.3
2.The bending radius of FPC should be large than 0.6
3.UnitiGmm