Product Specification

AU OPTRONICS CORPORATION

( ) Preliminary Specifications (V)
Final Specifications

Module	**10.1”(10.07”) WXGA 16:10 Color TFT-LCD with LED Backlight design**
Model Name	**B101EVT03.1**
Note ECOlor	***LED Backlight with driving circuit design*** ✓ ***Color Management (Virtual and Rich Color Solution)*** ✓ ***Dynamic Contrast Ratio (Power Saving Solution)***

Customer	**Date**
Checked & Approved by	**Date**
Note: This Specification is subject to change without notice.	

Approved by	**Date**
Trista Jiang	05/14/2012
Prepared by	
Singing Lee	05/14/2012
NBBU Marketing Division AU Optronics corporation	

Studio Technology Co. Ltd. (www.yslcd.com.tw)

Contents

1. Handling Precautions.....4
2. General Description.....5
2.1 General Specification.....5
2.2 Optical Characteristics.....6
3. Functional Block Diagram.....12
.....12
4. Absolute Maximum Ratings 13
4.1 Absolute Ratings of TFT LCD Module.....13
4.2 Absolute Ratings of Touch Sensor.....13
5. Electrical Characteristics.....14
5.1 TFT LCD Module.....14
5.2 Touch Sensor Power Consumption.....16
5.3 Backlight Unit.....17
6. Signal Interface Characteristic.....18
6.1 Pixel Format Image.....18
6.2 The Input Data Format.....19
6.3 Integration Interface Requirement.....20
6.4 Touch Sensor Signal Description/Pin Assignment.....21
\.....22
6.5 LVDS Interface Timing 22
6.6 Power ON/OFF Sequence.....24
7. Reliability Test.....25
8. Total Solution Dimension.....26
9. Shipping and Package.....28
9.1 Shipping Label Format.....28
.....28
9.2 Carton Label Format.....28
.....28
9.3 Shipping Package of Palletizing Sequence.....28
10. Appendix 29
10.1 EDID Description.....29

Studio Technology Co. Ltd. (www.yslcd.com.tw)

Record of Revision

Version and Date	Page	Old description	New Description	Remark
0.1 2011/08/12	All	1st preliminary version		
0.2 2011/09/19	26	TBD	S/L picture	
0.3 2011/11/30				
0.4 2011/12/15	30	Update EDID		
	25, 26	Update 2D Drawing		
0.5 2011/12/28	6	Update Operating/Storage Temp		
	13	Update Operating/Storage Temp		
1.0 2012/04/20				

Studio Technology Co. Ltd. (www.yslcd.com.tw)

1. Handling Precautions

1) Since front polarizer is easily damaged, pay attention not to scratch it.
2) Be sure to turn off power supply when inserting or disconnecting from input connector.
3) Wipe off water drop immediately. Long contact with water may cause discoloration or spots.
4) When the panel surface is soiled, wipe it with absorbent cotton or other soft cloth.
5) Since the panel is made of glass, it may break or crack if dropped or bumped on hard surface.
6) Since CMOS LSI is used in this module, take care of static electricity and insure human earth when handling.
7) Do not open nor modify the Module Assembly.
8) Do not press the reflector sheet at the back of the module to any directions.
9) At the insertion or removal of the Signal Interface Connector, be sure not to rotate nor tilt the Interface Connector of the TFT Module.
11) After installation of the TFT Module into an enclosure (Notebook PC Bezel, for example), do not twist nor bend the TFT Module even momentary. At designing the enclosure, it should be taken into consideration that no bending/twisting forces are applied to the TFT Module from outside. Otherwise the TFT Module may be damaged.
12) Small amount of materials having no flammability grade is used in the LCD module. The LCD module should be supplied by power complied with requirements of Limited Power Source (IEC60950 or UL1950), or be applied exemption.
13) Disconnecting power supply before handling LCD modules, it can prevent electric shock, DO NOT TOUCH the electrode parts, cables, connectors and LED circuit part of TFT module that a LED light bar build in as a light source of back light unit. It can prevent electrostatic breakdown.

Studio Technology Co. Ltd. (www.yslcd.com.tw)

2. General Description

B101EVT03.1is a Color Active Matrix Liquid Crystal Display composed of a TFT LCD panel, a driver circuit, and LED backlight system. The screen format is intended to support the 16:10 WXGA, 1280(H) x800(V) screen and 262k colors (RGB 6-bits data driver) with LED backlight driving circuit. All input signals are LVDS interface compatible.

B101EVT03.1 is designed for a display unit of notebook style personal computer and industrial machine.

2.1 General Specification

The following items are characteristics summary on the table at 25 ℃ condition:

Items	Unit	Specifications			
Screen Diagonal	[mm]	255.85 (10.07W”)			
Active Area	[mm]	216.96(H) x 135.6(V)			
Pixels H x V		1280 x 3(RGB) x 800			
Pixel Pitch	[mm]	0.1695 X 0.1695			
Pixel Format		R.G.B. Vertical Stripe			
Display Mode		Normally Black			
White Luminance (I_{LED}=21mA) **(Note: ILED is LED current)**	[cd/m^2]	300 typ. (5 points average l 255 min. (5 points average)			
Luminance Uniformity		1.25 max. (5 points)			
Contrast Ratio		1300 typ, 1000 min.			
Response Time	[ms]	25 typ / 35 Max			
Nominal Input Voltage VDD	[Volt]	+3.3 typ.			
Power Consumption	[Watt]	3.4 max. (Include Logic and Blu power)			
Weight	[Grams]	180 max (Panel only)			
		TBD max (Total solution)			
Physical Size (panel only) without bracket	[mm]		Min.	Typ.	Max.
		Length	228.96	229.46	229.95
		Width	148.7	149.2	149.7
		Thickness	---	---	5.2
Total solution	[mm]		Min.	Typ.	Max.
		Length	253.05	253.15	253.25
		Width	167.65	167.75	167.85
		Thickness			6.7
Electrical Interface		1 channel LVDS			

Studio Technology Co. Ltd. (www.yslcd.com.tw)

Glass Thickness	[mm]	0.3
Surface Treatment(panel only)		Anti-Reflection ≦1.5%, Hardness 3H (w/t static electricity protection); Static-proof coating
Support Color		262K colors (RGB 6-bit)
Temperature Range Operating Storage (Non-Operating)	 [°C] [°C]	 0 to +50 -20 to +60
RoHS Compliance		RoHS Compliance

2.11 General Touch Specification (without system frame)

Item	Unit	Specifications
Type of Touch Sensor		Projective Capacitive
Panel Size		10.1”
Outline Dimension	mm	253.15(±0.1) X 167.75(±0.1)
Total Thickness	mm	1.175(Typ.)
Total Weight	g	124±10%
TP-Active Area	mm	136.2
Interface		I2C
Multi-Touch		10 point
Input method		Multi Finger or Finger

2.2 Optical Characteristics

The optical characteristics are measured under stable conditions at 25°C (Room Temperature) :

Item	Symbol	Conditions	Min.	Typ.	Max.	Unit	Note
White Luminance I_{LED}=21mA		**5 points average**	**255**	**300**	**---**	**cd/m²**	1, 4, 5.
Viewing Angle	**θ_R** **θ_L**	**Horizontal (Right)** **CR = 10 (Left)**	**80** **80**	**85** **85**	**---** **---**	**degree**	4, 9
	ψ_H **ψ_L**	**Vertical (Upper)** **CR = 10 (Lower)**	**80** **80**	**85** **85**	**---** **---**		
Luminance Uniformity	**δ_{5P}**	**5 Points**	**---**	**---**	**1.25**		1, 3, 4
Luminance Uniformity	**δ_{13P}**	**13 Points**	**---**	**---**	**1.50**		2, 3, 4
Contrast Ratio	**CR**		**1000**	**1300**	**-**		4, 6
Cross talk	**%**		**---**	**---**	**4**		4, 7
Response Time	**T_{RT}**	**Rising + Falling**	**---**	**25**	**35**	**msec**	4, 8

Studio Technology Co. Ltd. (www.yslcd.com.tw)

Color / Chromaticity Coordinates	Red	Rx	CIE 1931	0.549	0.579	0.609		4
		Ry		0.308	0.338	0.368		
	Green	Gx		0.295	0.325	0.355		
		Gy		0.530	0.560	0.590		
	Blue	Bx		0.132	0.152	0.182		
		By		0.095	0.125	0.155		
	White	Wx		0.283	0.313	0.343		
		Wy		0.299	0.329	0.359		
NTSC		%		-	45	-		

Studio Technology Co. Ltd. (www.yslcd.com.tw)

Note 1: 5 points position (Ref: Active area)

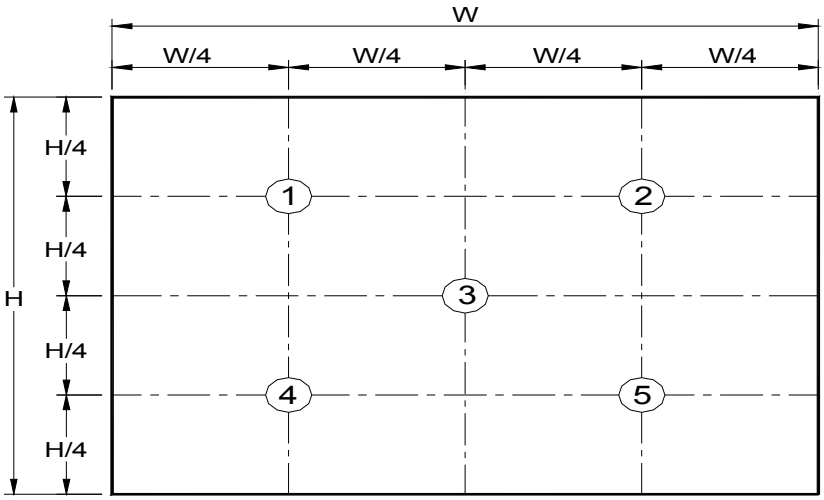

Note 2: 13 points position (Ref: Active area)

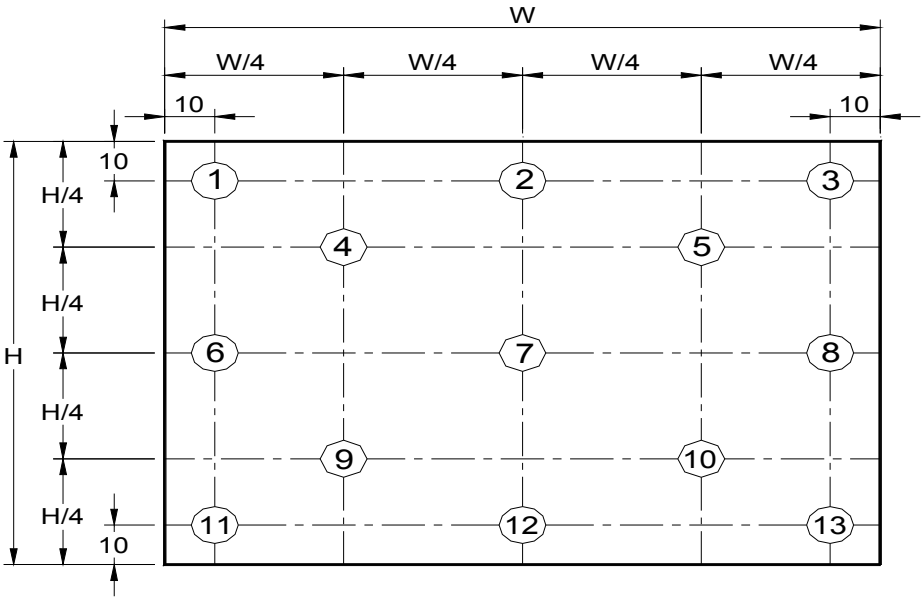

Note 3: The luminance uniformity of 5 or13 points is defined by dividing the maximum luminance values by the minimum test point luminance

$$\delta_{W5} = \frac{\text{Maximum Brightness of five points}}{\text{Minimum Brightness of five points}}$$

$$\delta_{W13} = \frac{\text{Maximum Brightness of thirteen points}}{\text{Minimum Brightness of thirteen points}}$$

Note 4: Measurement method

The LCD module should be stabilized at given temperature for 30 minutes to avoid abrupt temperature change during measuring. In order to stabilize the luminance, the measurement should be executed after lighting

Studio Technology Co. Ltd. (www.yslcd.com.tw)

Backlight for 30 minutes in a stable, windless and dark room, and it should be measured in the center of screen.

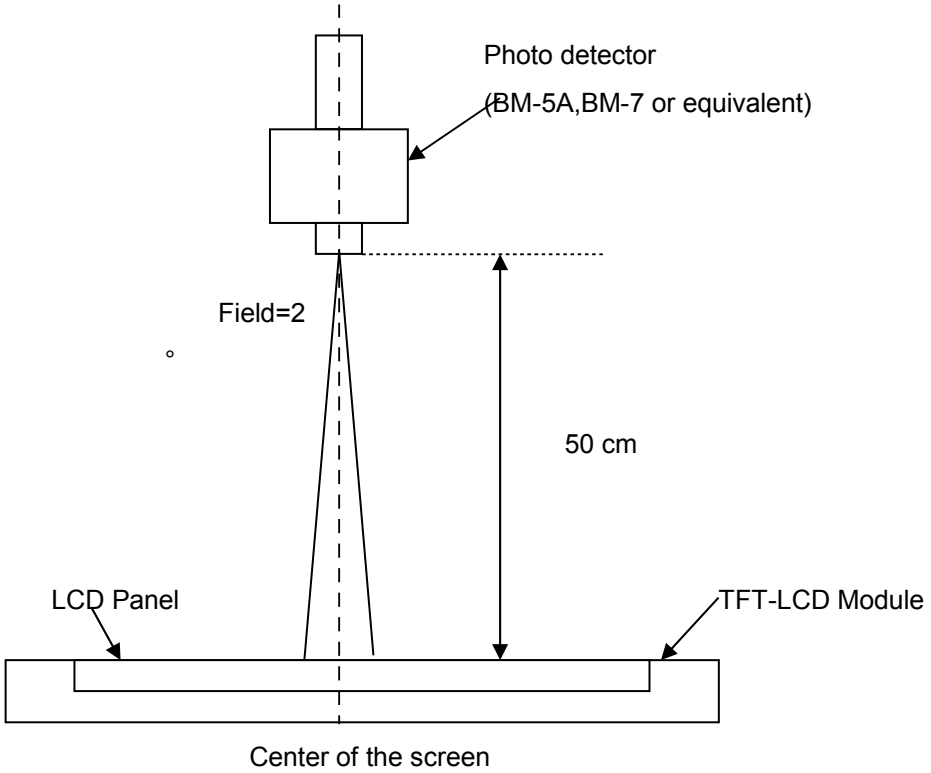

Note 5： Definition of Average Luminance of White (Y_L):

Measure the luminance of gray level 63 at 5 points，Y_L = [L (1)+ L (2)+ L (3)+ L (4)+ L (5)] / 5

L (x) is corresponding to the luminance of the point X at Figure in Note (1).

Note 6： Definition of contrast ratio:

Contrast ratio is calculated with the following formula.

$$\text{Contrast ratio (CR)} = \frac{\text{Brightness on the “White” state}}{\text{Brightness on the “Black” state}}$$

Note 7： Definition of Cross Talk (CT)

$CT = | Y_B – Y_A | / Y_A \times 100$ (%)

Where

Y_A = Luminance of measured location without gray level 0 pattern (cd/m2)

Y_B = Luminance of measured location with gray level 0 pattern (cd/m2)

Studio Technology Co. Ltd. (www.yslcd.com.tw)

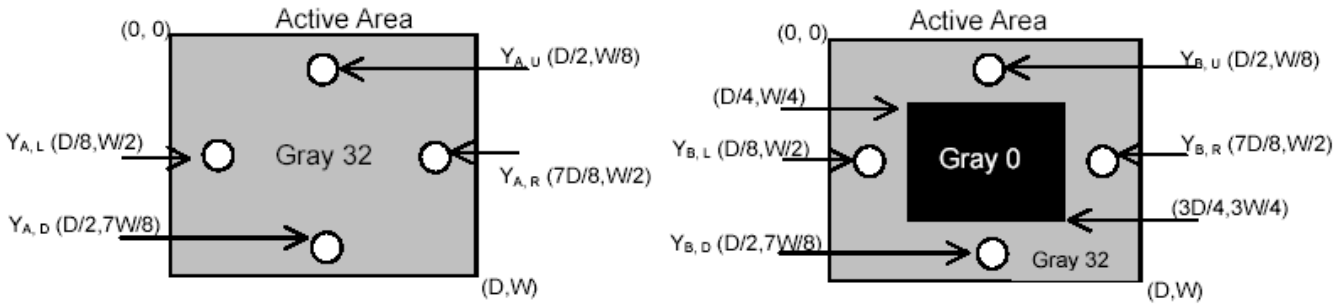

Note 8: Definition of response time:

The output signals of BM-7 or equivalent are measured when the input signals are changed from “Black” to “White” (falling time) and from “White” to “Black” (rising time), respectively. The response time is interval between the 10% and 90% of amplitudes. Refer to figure as below.

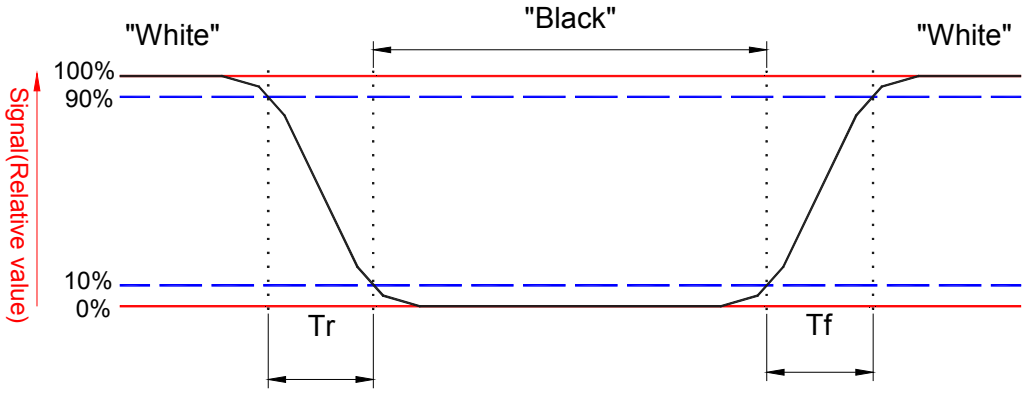

Studio Technology Co. Ltd. (www.yslcd.com.tw)

Note 9. Definition of viewing angle

Viewing angle is the measurement of contrast ratio ≧10, at the screen center, over a 180° horizontal and 180° vertical range (off-normal viewing angles). The 180° viewing angle range is broken down as follows; 90° (θ) horizontal left and right and 90° (Φ) vertical, high (up) and low (down). The measurement direction is typically perpendicular to the display surface with the screen rotated about its center to develop the desired measurement viewing angle.

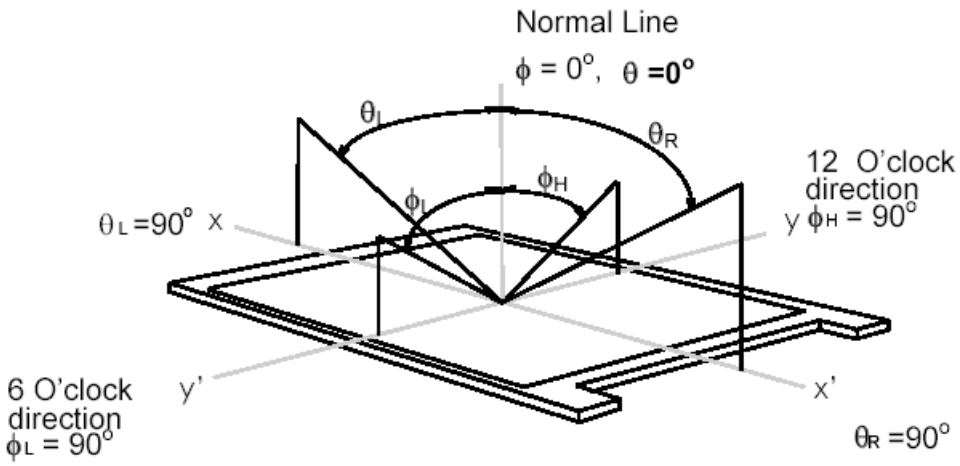

Studio Technology Co. Ltd. (www.yslcd.com.tw)

3. Functional Block Diagram

The following diagram shows the functional block of the 10.1 inches wide Color TFT/LCD 40 Pin one channel Module

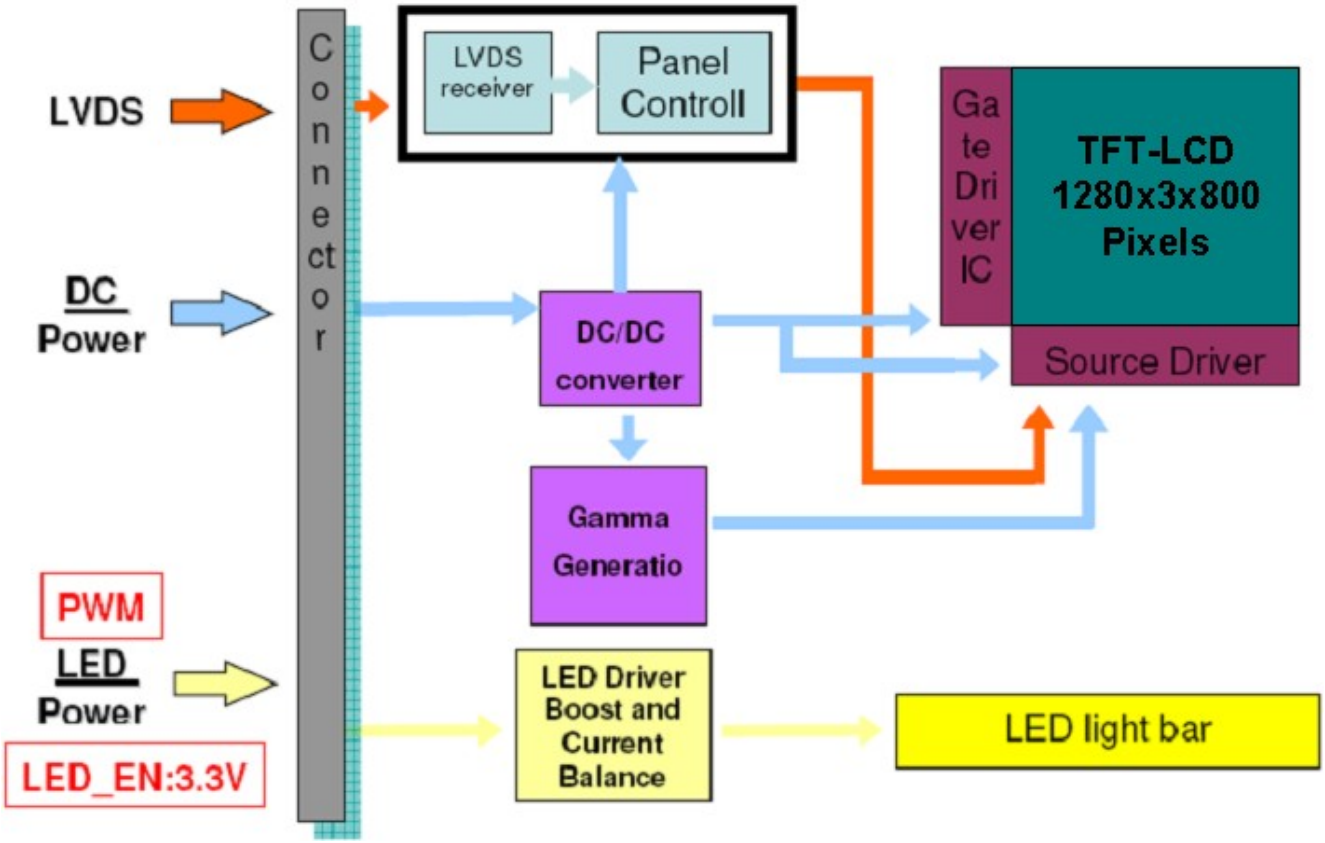

Studio Technology Co. Ltd. (www.yslcd.com.tw)

4. Absolute Maximum Ratings

An absolute maximum rating of the module is as following:

4.1 Absolute Ratings of TFT LCD Module

Item	Symbol	Min	Max	Unit	Conditions
Logic/LCD Drive Voltage	Vin	-0.3	+4.0	[Volt]	Note 1,2

4.2 Absolute Ratings of Touch Sensor

Item	Symbol	Min	Max	Unit	Conditions
Touch Sensor Power Voltage	Vin	3.1	6	[Volt]	

4.3 Absolute Ratings of Environment

Item	Symbol	Min	Max	Unit	Conditions
Operating Temperature	TOP	0	+50	[°C]	Note 4
Operation Humidity	HOP	5	95	[%RH]	Note 4
Storage Temperature	TST	-20	+60	[°C]	Note 4
Storage Humidity	HST	5	95	[%RH]	

Note 1: At Ta (25℃)

Note 2: Permanent damage to the device may occur if exceed maximum values

Note 3: LED specification refer to section 5.2

Note 4: For quality performance, please refer to AUO IIS (Incoming Inspection Standard).

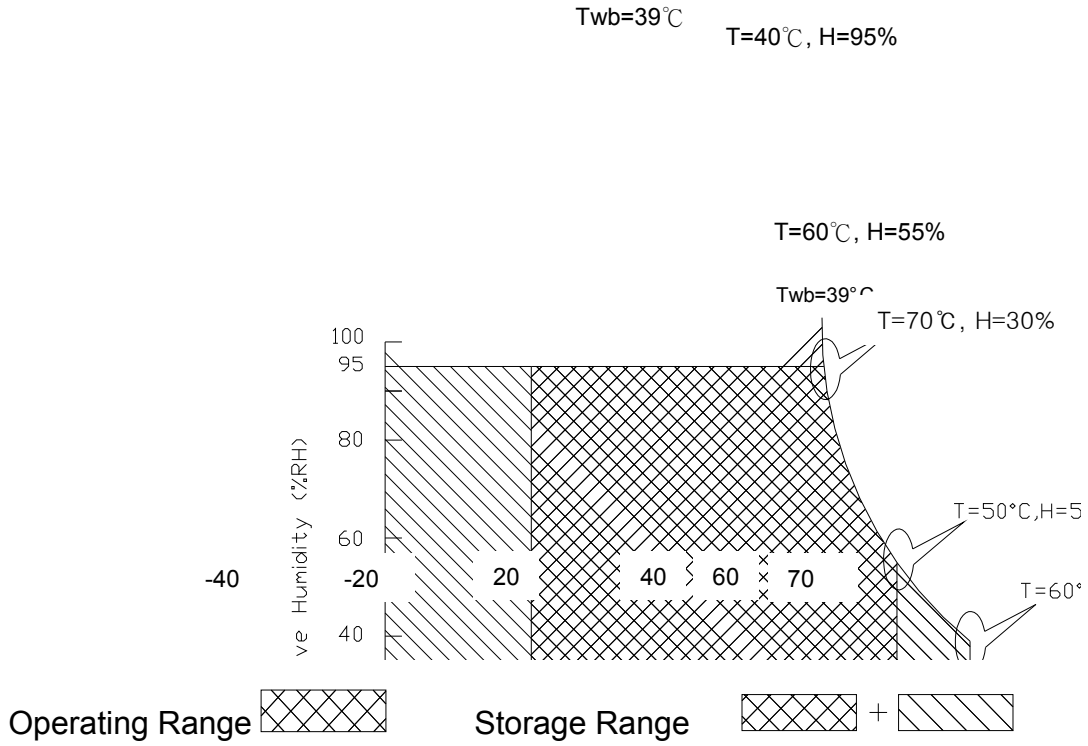

Studio Technology Co. Ltd. (www.yslcd.com.tw)

5. Electrical Characteristics

5.1 TFT LCD Module

5.1.1 Power Specification

Input power specifications are as follows;

The power specification are measured under 25℃ and frame frenquency under 60Hz

Symble	Parameter	Min	Typ	Max	Units	Note
VDD	Logic/LCD Drive Voltage	3.0	3.3	3.6	[Volt]	
PDD	VDD Power	-	-	0.7	[Watt]	Note 1
IDD	IDD Current	-	-	212	[mA]	Note 1
IRush	Inrush Current	-	-	2000	[mA]	Note 2
VDDrp	Allowable Logic/LCD Drive Ripple Voltage	-	-	100	[mV] p-p	

Note 1 : Maximum Measurement Condition：Black Pattern at 3.3V driving voltage. ($P_{max}=V_{3.3} \times I_{black}$)

Note 2：Measure Condition

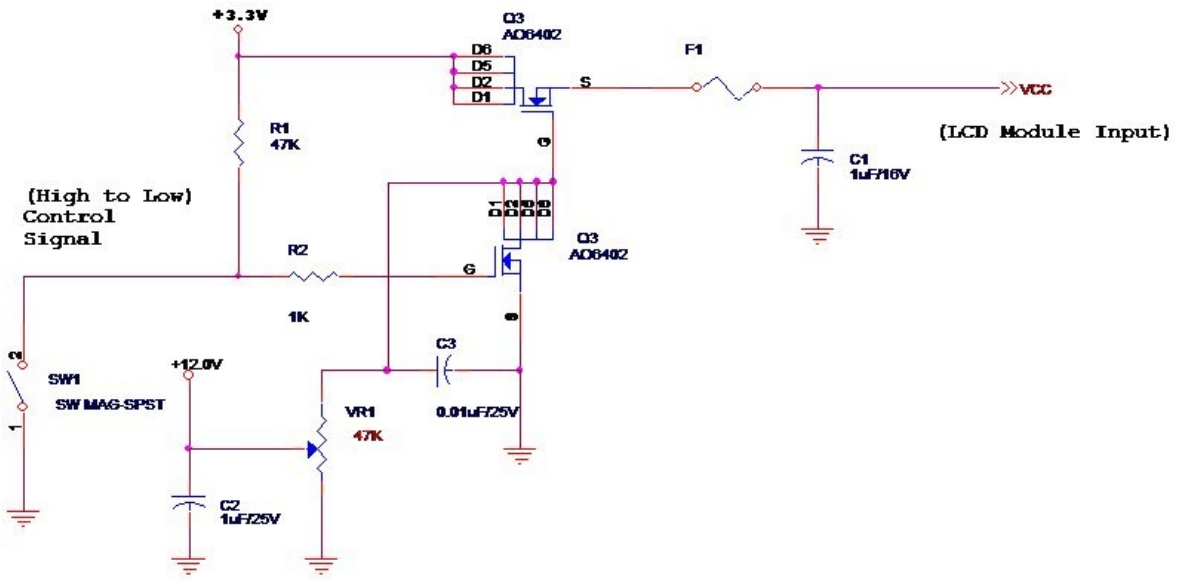

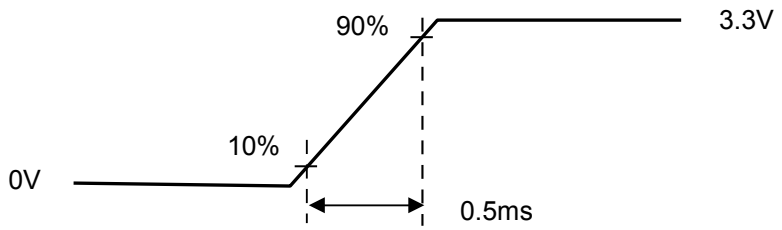

Vin rising time

Studio Technology Co. Ltd. (www.yslcd.com.tw)

5.1.2 Signal Electrical Characteristics

Input signals shall be low or High-impedance state when VDD is off.

Signal electrical characteristics are as follows;

Parameter	Condition	Min	Max	Unit
V_{TH}	Differential Input High Threshold (Vcm=+1.2V)	---	100	[mV]
V_{TL}	Differential Input Low Threshold (Vcm=+1.2V)	-100	----	[mV]
$\|V_{ID}\|$	Differential Input Voltage	100	600	[mV]
V_{CM}	Differential Input Common Mode Voltage	1.125	1.375	[V]

Note: LVDS Signal Waveform

•

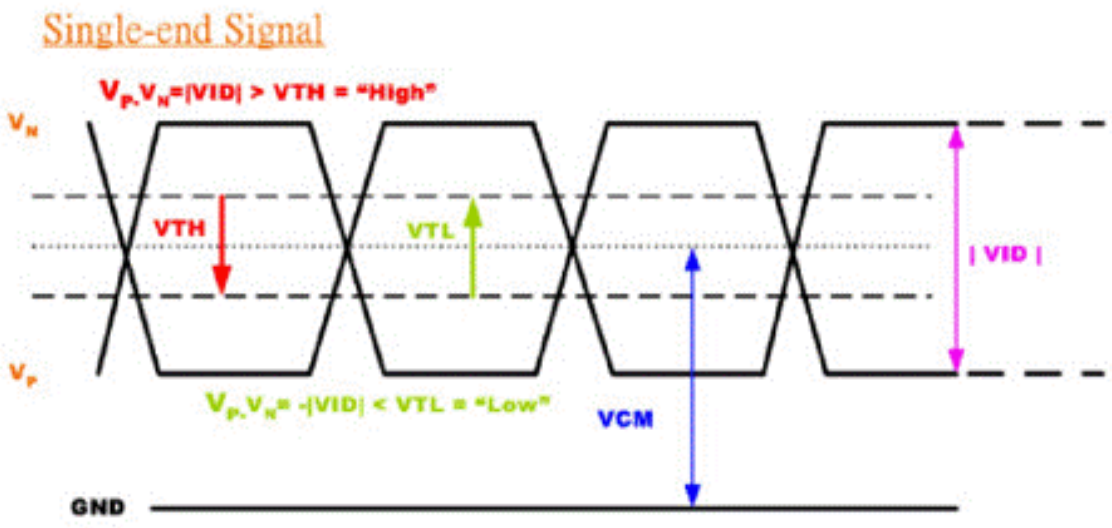

Studio Technology Co. Ltd. (www.yslcd.com.tw)

5.1.3 Dynamic contrast ratio Characteristics

Parameter	Symbol	Min	Typ	Max	Units	Remark
Dynamic contrast ratio(DCR) Input High Level	DCR_EN	2.5	-	5.5	[Volt]	Define as Connector Interface (Ta=25℃)
Dynamic contrast ratio(DCR) Input Low Level		-	-	0.8	[Volt]	
DCR Mode Duty Index	Duty	70	-	100	%	Note 1
L0 Gray level (PWM input 100%)	Power	-	0.7P	-	Watt	Note 2
L63 Gray level (PWM input 100%)	Power	-	1P	-	Watt	

Note 1: The minimums dynamic contrast ratio is setting at darkness, and a maximum is setting at brightness.

Note 2: The power saving capability refer to original Backlight duty 100% power consumption (P)

5.2 Touch Sensor Power Consumption

Items	Symbol	Specifications			Unit	Notes
		Min.	Typ.	Max.		
Touch Panel Power Supply	VDD		5		V	
Touch Panel Power Supply Current	VDDi		36.4		mA	

Studio Technology Co. Ltd. (www.yslcd.com.tw)

5.3 Backlight Unit

5.3.1 LED characteristics

Parameter	Symbol	Min	Typ	Max	Units	Condition
Backlight Power Consumption	PLED	-	-	2.7	[Watt]	(Ta=25℃), Note 1 Vin =12V
LED Life-Time	N/A	15,000	-	-	Hour	(Ta=25℃), Note 2 I_F=19mA

Note 1: Calculator value for reference P_{LED} = V_F (Normal Distribution) * I_F (Normal Distribution) / Efficiency

Note 2: The LED life-time define as the estimated time to 50% degradation of initial luminous.

5.3.2 Backlight input signal characteristics

Parameter	Symbol	Min	Typ	Max	Units	Remark
LED Power Supply	VLED	5.5	12.0	21.0	[Volt]	Define as Connector Interface (Ta=25℃)
LED Enable Input High Level	VLED_EN	2.5	-	5.5	[Volt]	
LED Enable Input Low Level		-	-	0.8	[Volt]	
PWM Logic Input High Level	VPWM_EN	2.5	-	5.5	[Volt]	
PWM Logic Input Low Level		-	-	0.8	[Volt]	
PWM Input Frequency	FPWM	190	200	210	Hz	
PWM Duty Ratio	Duty	5	--	100	%	

Studio Technology Co. Ltd. (www.yslcd.com.tw)

6. Signal Interface Characteristic

6.1 Pixel Format Image

Following figure shows the relationship of the input signals and LCD pixel format.

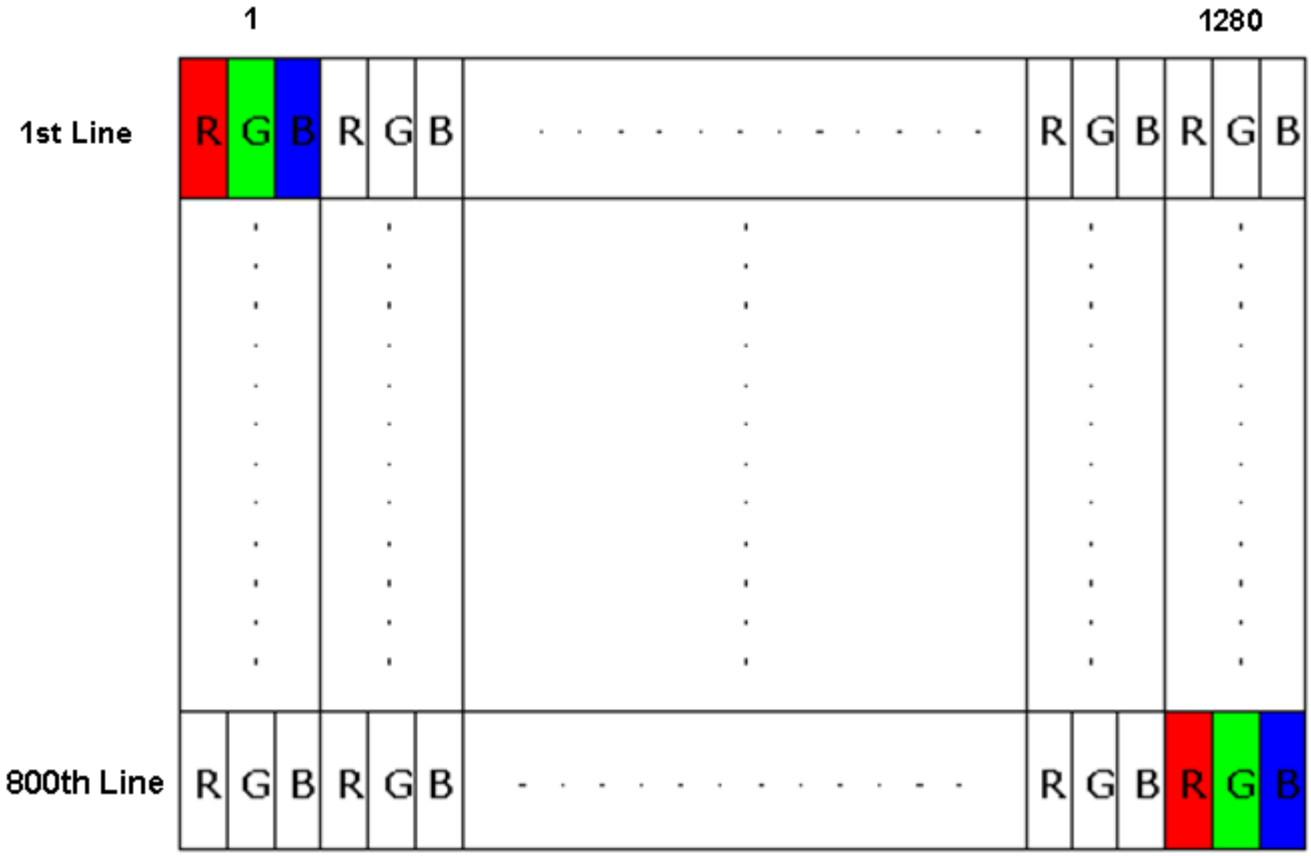

6.2 The Input Data Format

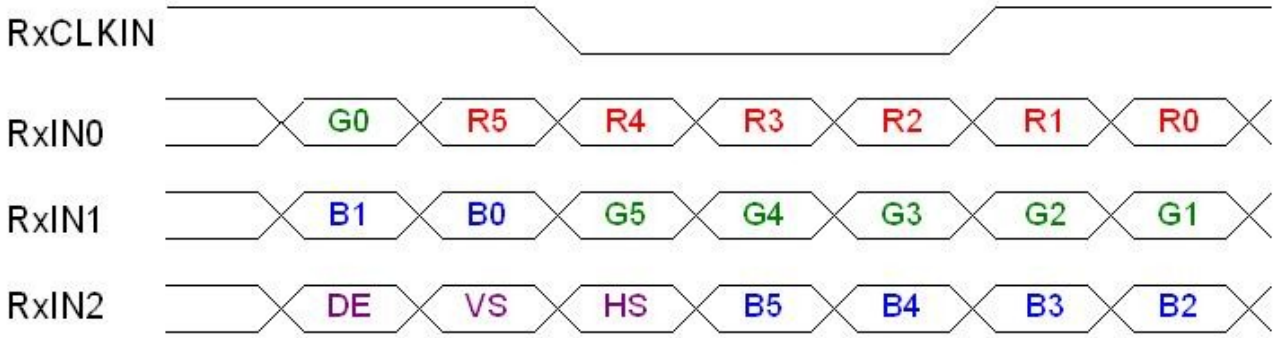

Signal Name	Description	
R5 R4 R3 R2 R1 R0	Red Data 5 (MSB) Red Data 4 Red Data 3 Red Data 2 Red Data 1 Red Data 0 (LSB) Red-pixel Data	Red-pixel Data Each red pixel's brightness data consists of these 6 bits pixel data.
G5 G4 G3 G2 G1 G0	Green Data 5 (MSB) Green Data 4 Green Data 3 Green Data 2 Green Data 1 Green Data 0 (LSB) Green-pixel Data	Green-pixel Data Each green pixel's brightness data consists of these 6 bits pixel data.
B5 B4 B3 B2 B1 B0	Blue Data 5 (MSB) Blue Data 4 Blue Data 3 Blue Data 2 Blue Data 1 Blue Data 0 (LSB) Blue-pixel Data	Blue-pixel Data Each blue pixel's brightness data consists of these 6 bits pixel data.
RxCLKIN	Data Clock	The signal is used to strobe the pixel data and DE signals. All pixel data shall be valid at the falling edge when the DE signal is high.
DE	Display Timing	This signal is strobed at the falling edge of RxCLKIN. When the signal is high, the pixel data shall be valid to be displayed.
VS	Vertical Sync	The signal is synchronized to RxCLKIN .
HS	Horizontal Sync	The signal is synchronized to RxCLKIN .

Note: Output signals from any system shall be low or High-impedance state when VDD is off.

6.3 Integration Interface Requirement

6.3.1 LVDS Connector Description

Physical interface is described as for the connector on module.

These connectors are capable of accommodating the following signals and will be following components.

Connector Name / Designation	For Signal Connector
Manufacturer	JAE or Compatible
Type / Part Number	JAE HD1S040HA1 or Compatible
Mating Housing/Part Number	IPEX 20453-040T-11or Compatible

6.3.2 LVDS Pin Assignment

LVDS is a differential signal technology for LCD interface and high speed data transfer device.

PIN#	Signal Name	Description
1	NC	No Connection (Reserve)
2	AVDD	Power Supply +3.3V
3	AVDD	Power Supply +3.3V
4	VEDID	EDID +3.3V Power
5	NC	No Connection (Reserve)
6	CLK_EDID	EDID Clock Input
7	DAT_EDID	EDID Data Input
8	Rin0-	-LVDSdifferential data input(R0-R5,G0)
9	Rin0+	+LVDSdifferential data input(R0-R5,G0)
10	GND	Ground
11	Rin1-	-LVDSdifferential data input(G1-G5,B0-B1)
12	Rin1+	+LVDSdifferential data input(G1-G5,B0-B1)
13	GND	Ground
14	Rin2-	-LVDSdifferential data input(B2-B5,HS,VS,DE)
15	Rin2+	+LVDSdifferential data input(B2-B5,HS,VS,DE)
16	GND	Ground
17	ClkIN-	-LVDSdifferential clock input
18	ClkIN+	+LVDSdifferential clock input
19	NC	No Connection (Reserve)
20	NC	No Connection (Reserve)
21	NC	No Connection (Reserve)
22	GND	Ground–Shield
23	NC	No Connection (Reserve)
24	NC	No Connection (Reserve)
25	GND	Ground–Shield

Studio Technology Co. Ltd. (www.yslcd.com.tw)

26	NC	No Connection (Reserve)
27	NC	No Connection (Reserve)
28	GND	Ground–Shield
29	NC	No Connection (Reserve)
30	NC	No Connection (Reserve)
31	VLED_GND	LED Ground
32	VLED_GND	LED Ground
33	VLED_GND	LED Ground
34	NC	No Connection (Reserve)
35	VPWM_EN	System PWM Logic Input Level
36	VLED_EN	LED enable input level
37	DCR_EN	DCR enable input level
38	VLED	LED Power Supply
39	VLED	LED Power Supply
40	VLED	LED Power Supply

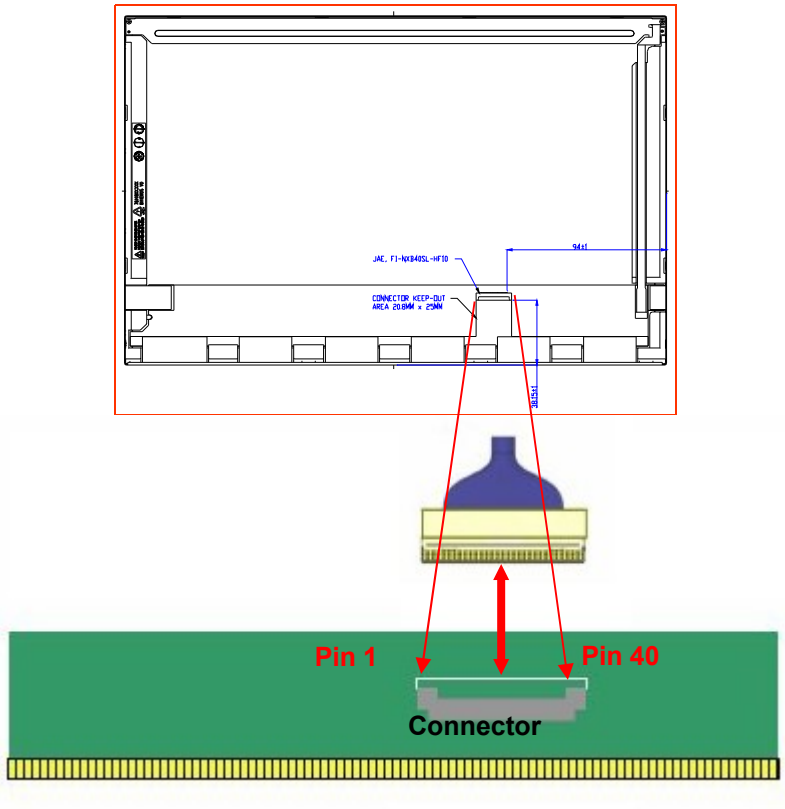

Note1: Input signals shall be low or High-impedance state when VDD is off.

6.4 Touch Sensor Signal Description/Pin Assignment

6.4.1 Touch Sensor Pin Assignment

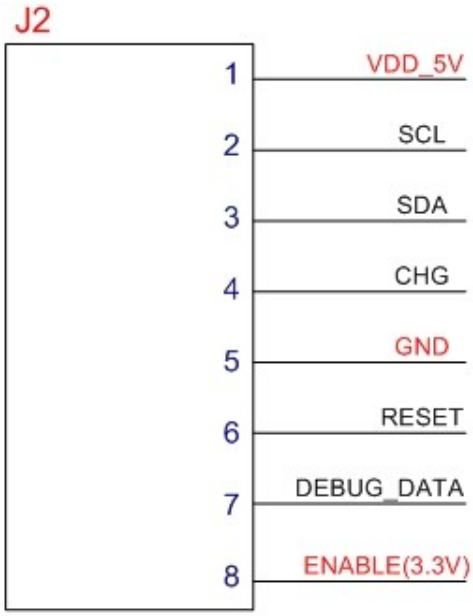

6.5 LVDS Interface Timing

6.5.1 Timing Characteristics

Basically, interface timings should match the 1280x800 /60Hz manufacturing guide line timing.

Parameter		Symbol	Min.	Typ.	Max.	Unit
Frame Rate		---	---	60	---	Hz
Clock frequency		1/ T_{Clock}	64	68.93	85	MHz
Vertical Section	Period	T_V	808	816	1023	T_{Line}
	Active	T_{VD}	800			
	Blanking	T_{VB}	8	16	223	
Horizontal Section	Period	T_H	1310	1408	2047	T_{Clock}
	Active	T_{HD}	1280			
	Blanking	T_{HB}	40	168	767	

Note : DE mode only

6.5.2 Timing diagram

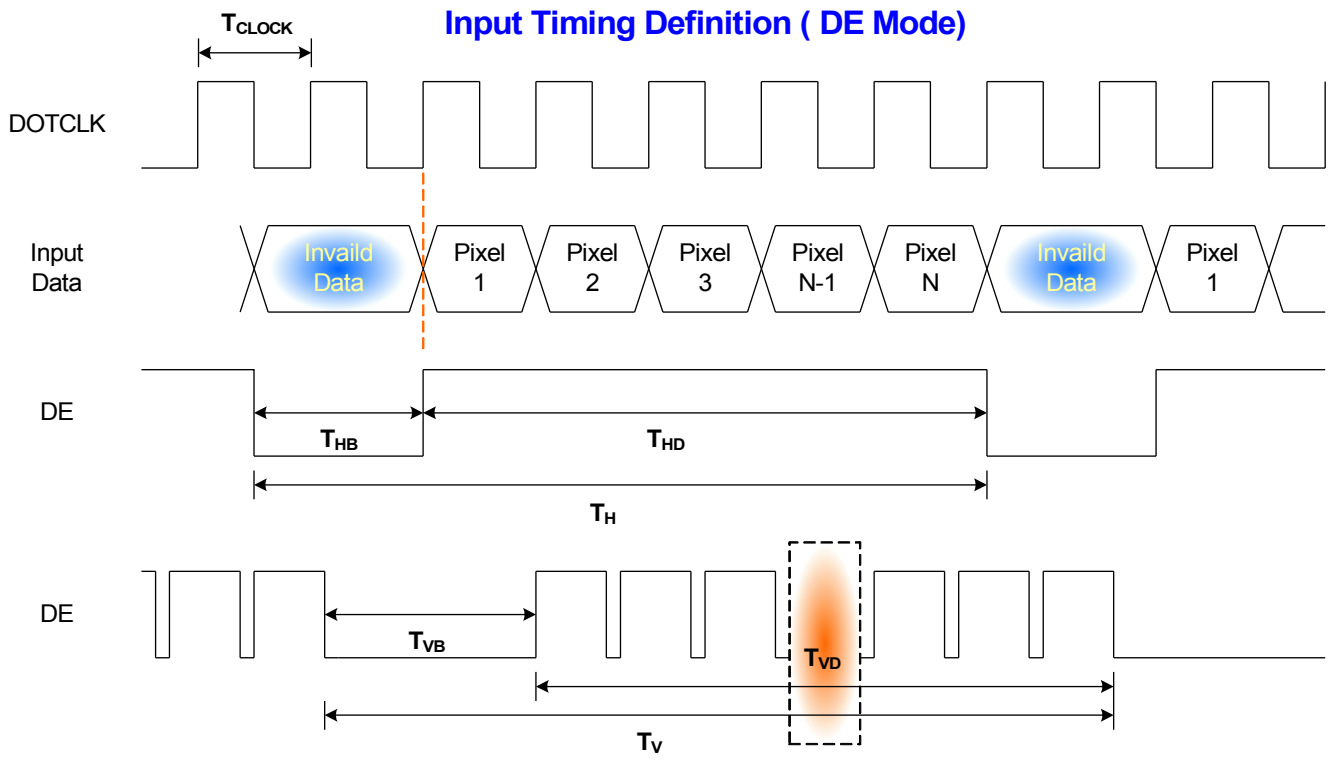

6.6 Power ON/OFF Sequence

Power on/off sequence is as follows. Interface signals and LED on/off sequence are also shown in the chart. Signals from any system shall be Hi-Z state or low level when VDD is off

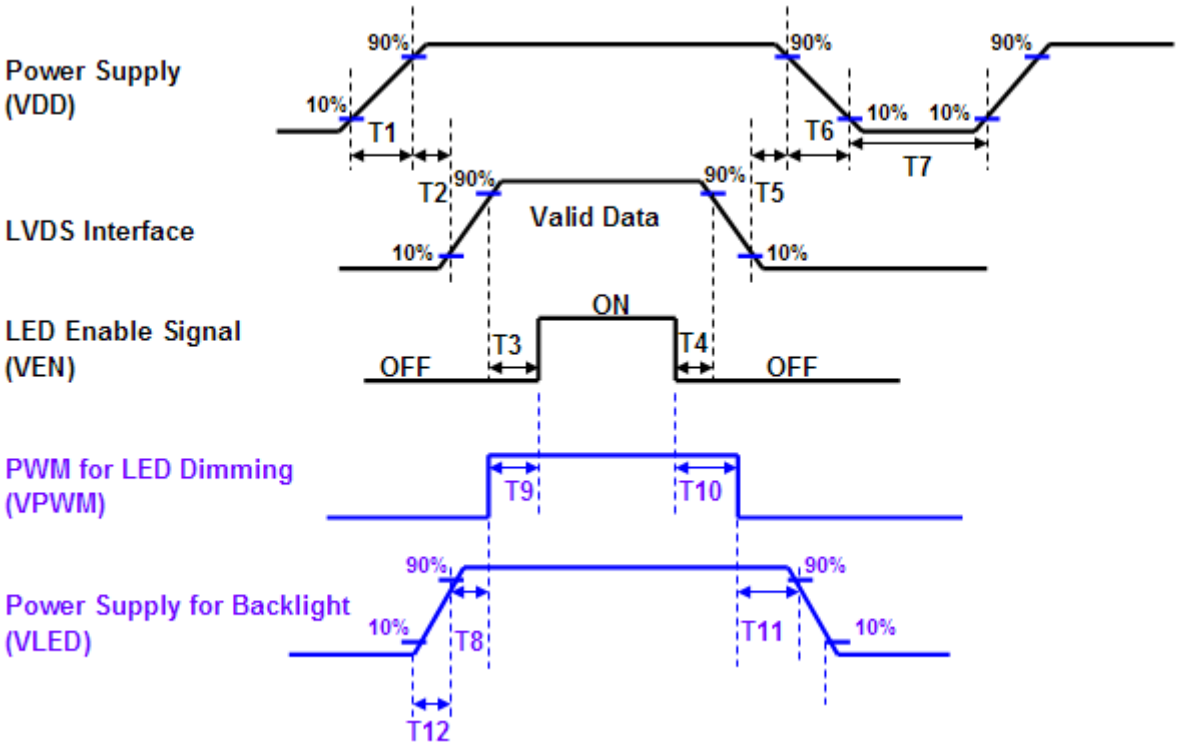

Power Sequence Timing			
Parameter	Value		Units
	Min.	Max.	
T1	0.5	10	ms
T2	0	50	
T3	200	-	
T4	200	-	
T5	0	50	
T6	0	10	
T7	500	-	
T8	10	-	
T9	0	180	
T10	0	180	
T11	10	-	
T12	0.5	10	

7. Reliability Test

Items	Required Condition	Note
Temperature Humidity Bias	Ta= 40℃, 90%RH, 300h	
High Temperature Operation	Ta= 50℃, Dry, 300h	
Low Temperature Operation	Ta= 0℃, 300h	
High Temperature Storage	Ta= 60℃, 35%RH, 300h	
Low Temperature Storage	Ta= -20℃, 50%RH, 250h	
Thermal Shock Test	Ta=-20℃to 60℃, Duration at 30 min, 100 cycles	
ESD	Contact : ±8 KV Air : ±15 KV	Note 1

Note1: According to EN 61000-4-2 , ESD class B: Some performance degradation allowed. Self-recoverable. No data lost, No hardware failures.

Remark: MTBF (Excluding the LED): 30,000 hours with a confidence level 90%

Studio Technology Co. Ltd. (www.yslcd.com.tw)

8. Total Solution Dimension

8.1 Standard Front View

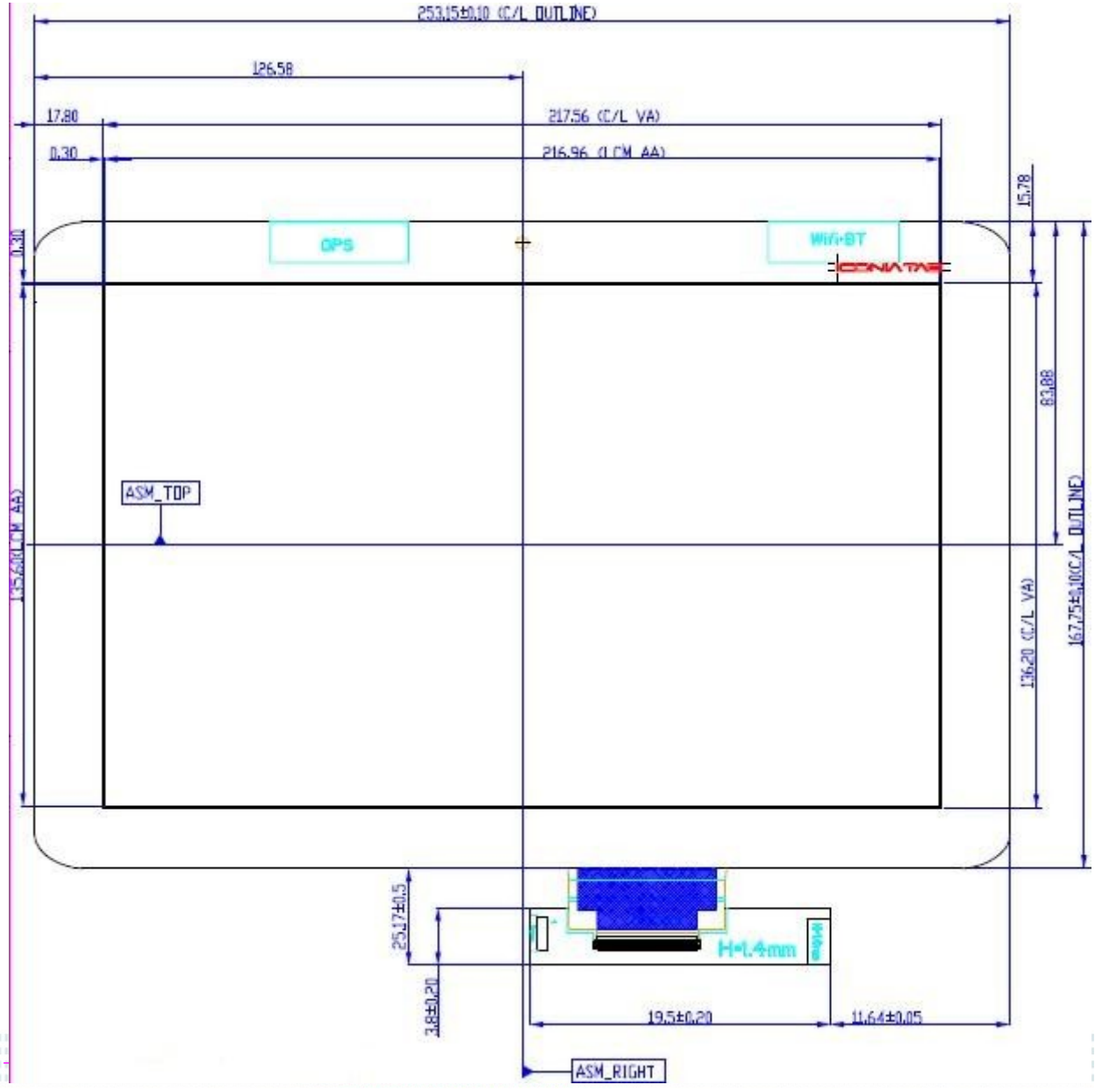

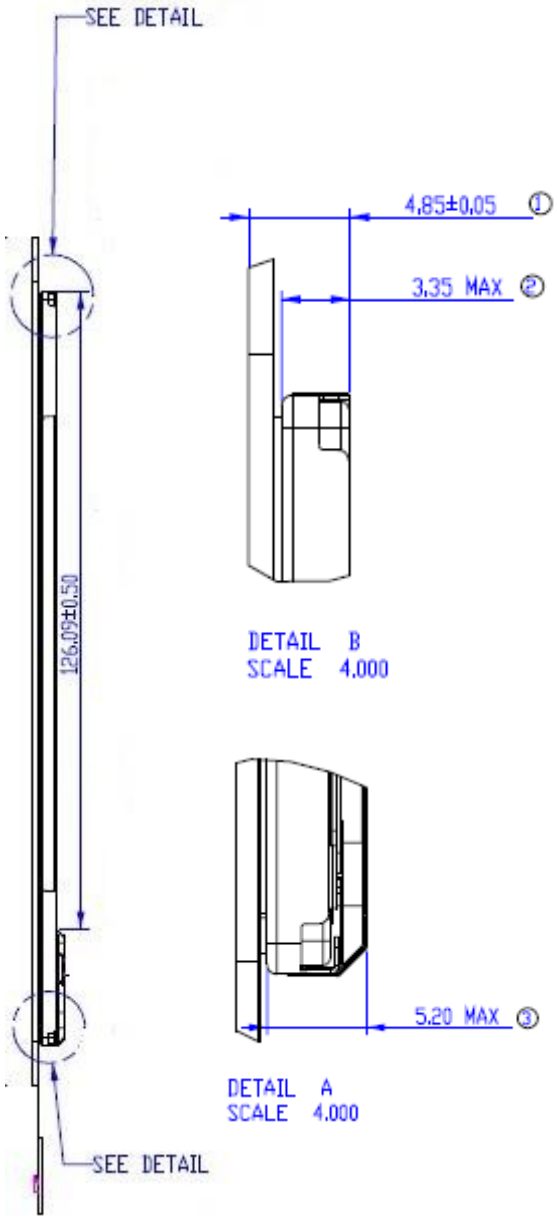

Studio Technology Co. Ltd. (www.yslcd.com.tw)

8.2 Standard Rear View

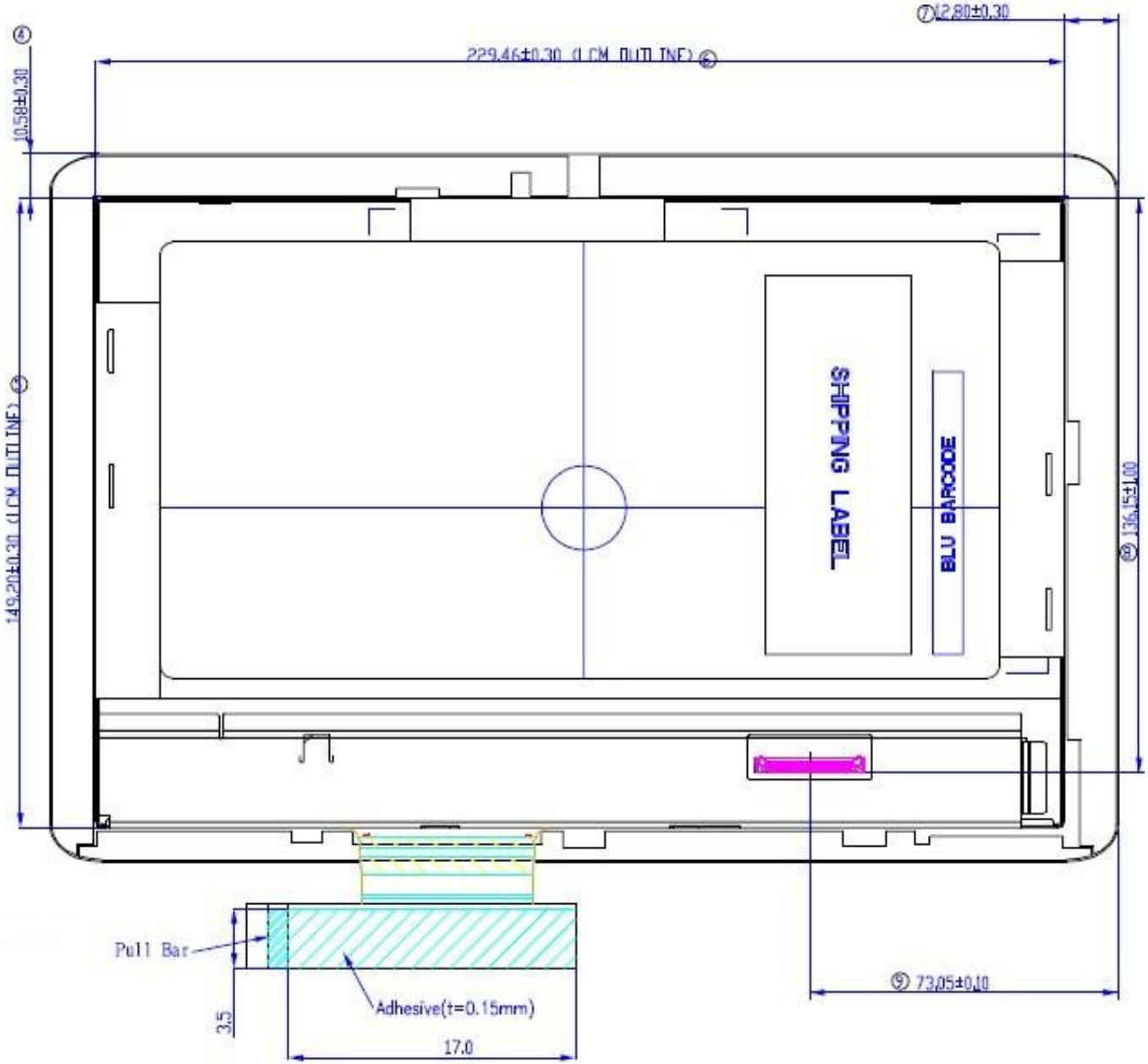

9. Shipping and Package

9.1 Shipping Label Format

Shipping Label

9.2 Carton Label Format

Carton Label

9.3 Shipping Package of Palletizing Sequence

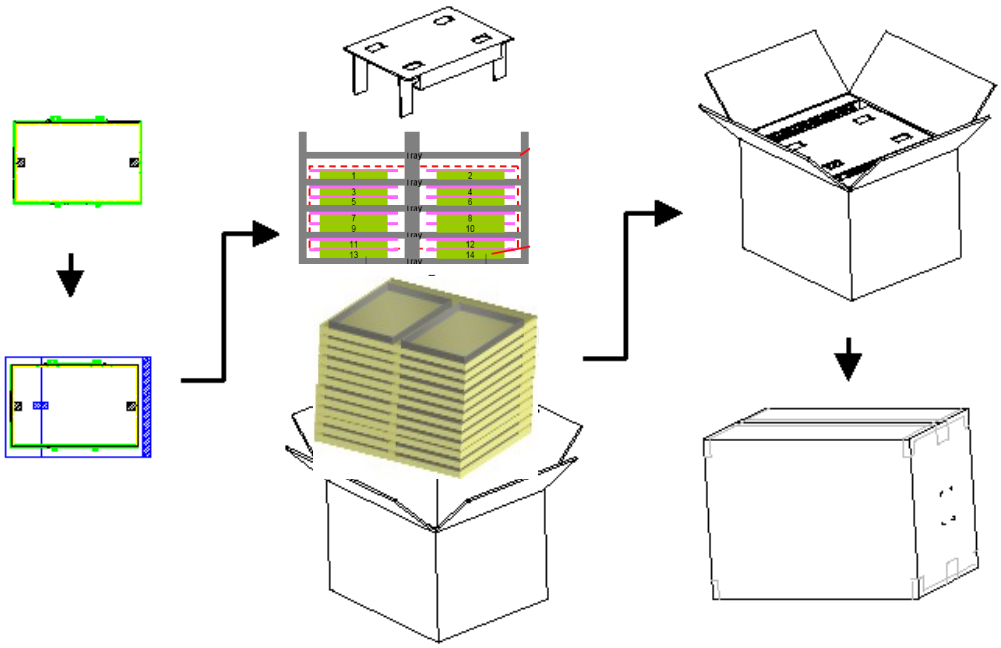

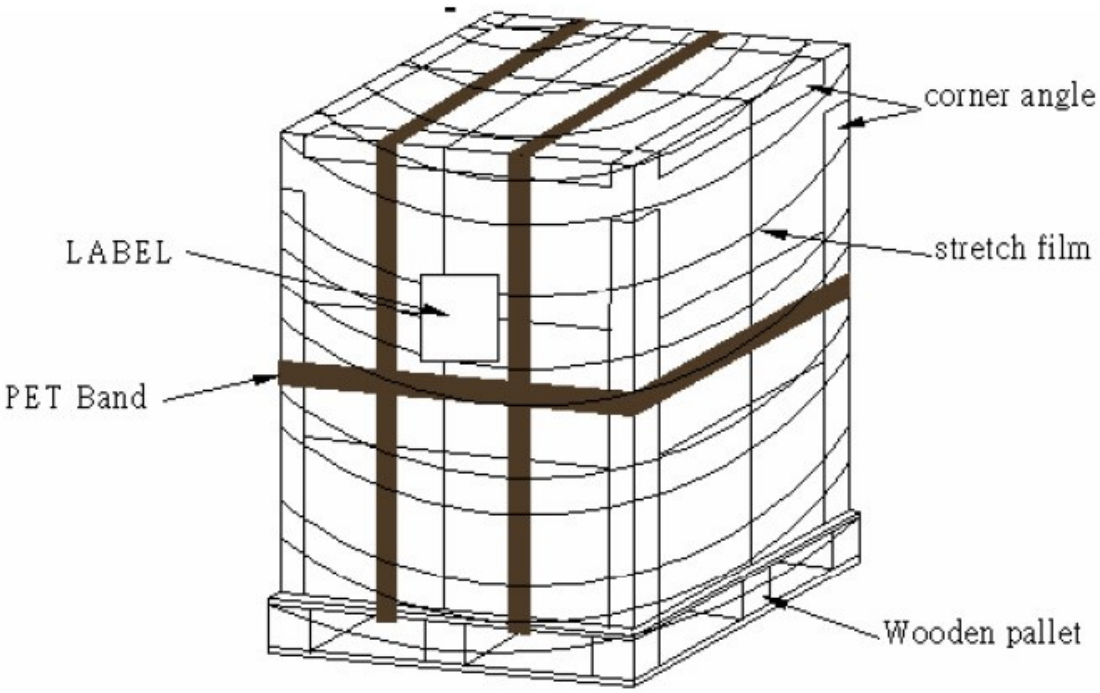

10. Appendix

10.1 EDID Description

B101EVT03.1 EDID Code

Address	FUNCTION	Value	Value	Value
HEX		HEX	BIN	DEC
00	Header	00	00000000	0
01		FF	11111111	255
02		FF	11111111	255
03		FF	11111111	255
04		FF	11111111	255
05		FF	11111111	255
06		FF	11111111	255
07		00	00000000	0
08	EISA Manuf. Code LSB	06	00000110	6
09	Compressed ASCII	AF	10101111	175
0A	Product Code	D4	11010100	212
0B	hex, LSB first	30	00110000	48
0C	32-bit ser #	00	00000000	0
0D		00	00000000	0
0E		00	00000000	0
0F		00	00000000	0
10	Week of manufacture	00	00000000	0
11	Year of manufacture	15	00010101	21
12	EDID Structure Ver.	01	00000001	1
13	EDID revision #	04	00000100	4
14	**Video input def.** *(digital I/P, non-TMDS, CRGB)*	90	10010000	144
15	**Max H image size** *(rounded to cm)*	16	00010110	22
16	**Max V image size** *(rounded to cm)*	0E	00001110	14
17	**Display Gamma** *(=(gamma*100)-100)*	78	01111000	120
18	**Feature support** *(no DPMS, Active OFF, RGB, tmg Blk#1)*	02	00000010	2
19	Red/green low bits **(Lower 2:2:2:2 bits)**	CB	11001011	203
1A	Blue/white low bits **(Lower 2:2:2:2 bits)**	55	01010101	85
1B	Red x **(Upper 8 bits)**	94	10010100	148
1C	Red y/ highER 8 bits	57	01010111	87
1D	Green x	53	01010011	83
1E	Green y	8E	10001110	142
1F	Blue x	27	00100111	39
20	Blue y	23	00100011	35
21	White x	50	01010000	80
22	White y	54	01010100	84
23	Established timing 1	00	00000000	0
24	Established timing 2	00	00000000	0
25	Established timing 3	00	00000000	0
26	Standard timing #1	01	00000001	1
27		01	00000001	1
28	Standard timing #2	01	00000001	1
29		01	00000001	1
2A	Standard timing #3	01	00000001	1
2B		01	00000001	1

2C	Standard timing #4	01	00000001	1
2D		01	00000001	1
2E	Standard timing #5	01	00000001	1
2F		01	00000001	1
30	Standard timing #6	01	00000001	1
31		01	00000001	1
32	Standard timing #7	01	00000001	1
33		01	00000001	1
34	Standard timing #8	01	00000001	1
35		01	00000001	1
36	Pixel Clock/10000 LSB	D0	11010000	208
37	Pixel Clock/10000 USB	1B	00011011	27
38	Horz active **Lower 8bits**	00	00000000	0
39	Horz blanking **Lower 8bits**	B8	10111000	184
3A	HorzAct:HorzBlnk **Upper 4:4 bits**	50	01010000	80
3B	Vertical Active **Lower 8bits**	20	00100000	32
3C	Vertical Blanking **Lower 8bits**	08	00001000	8
3D	Vert Act : Vertical Blanking **(upper 4:4 bit)**	30	00110000	48
3E	HorzSync. Offset	08	00001000	8
3F	HorzSync.Width	0A	00001010	10
40	VertSync.Offset : VertSync.Width	31	00110001	49
41	Horz&Vert Sync Offset/Width **Upper 2bits**	00	00000000	0
42	Horizontal Image Size **Lower 8bits**	D8	11011000	216
43	Vertical Image Size **Lower 8bits**	87	10000111	135
44	Horizontal & Vertical Image Size **(upper 4:4 bits)**	00	00000000	0
45	Horizontal Border *(zero for internal LCD)*	00	00000000	0
46	Vertical Border *(zero for internal LCD)*	00	00000000	0
47	Signal *(non-intr, norm, no stero, sep sync, neg pol)*	18	00011000	24
48	Detailed timing/monitor	00	00000000	0
49	descriptor #2	00	00000000	0
4A		00	00000000	0
4B		0F	00001111	15
4C		00	00000000	0
4D		00	00000000	0
4E		00	00000000	0
4F		00	00000000	0
50		00	00000000	0
51		00	00000000	0
52		00	00000000	0
53		00	00000000	0
54		00	00000000	0
55		00	00000000	0
56		00	00000000	0
57		00	00000000	0
58		00	00000000	0
59		20	00100000	32
5A	Detailed timing/monitor	00	00000000	0
5B	descriptor #3	00	00000000	0
5C		00	00000000	0

5D		FE	11111110	254
5E		00	00000000	0
5F	Manufacture	41	01000001	65
60	Manufacture	55	01010101	85
61	Manufacture	4F	01001111	79
62		0A	00001010	10
63		20	00100000	32
64		20	00100000	32
65		20	00100000	32
66		20	00100000	32
67		20	00100000	32
68		20	00100000	32
69		20	00100000	32
6A		20	00100000	32
6B		20	00100000	32
6C	Detailed timing/monitor	00	00000000	0
6D	descriptor #4	00	00000000	0
6E		00	00000000	0
6F		FE	11111110	254
70		00	00000000	0
71	Manufacture P/N	42	01000010	66
72	Manufacture P/N	31	00110001	49
73	Manufacture P/N	30	00110000	48
74	Manufacture P/N	31	00110001	49
75	Manufacture P/N	45	01000101	69
76	Manufacture P/N	56	01010110	86
77	Manufacture P/N	54	01010100	84
78	Manufacture P/N	30	00110000	48
79	Manufacture P/N	33	00110011	51
7A	Manufacture P/N	2E	00101110	46
7B	Manufacture P/N	30	00110000	48
7C		20	00100000	32
7D		0A	00001010	10
7E	Extension Flag	00	00000000	0
7F	Checksum	2E	00101110	46
			SUM	6144
			SUM to HEX	1800